Naval District Washington

FACE MASK POLICIES

For personnel in uniform, including Military, Naval Security Forces, Fire & Emergency Services and Dispatch Personnel, cloth face coverings shall be of a plain neutral color and should complement the uniform being worn (black, brown, tan, white, grey, green, blue). No lettering/wording, logos, symbols, prints or patterns.

- Fit snugly & comfortably on the face for prolonged wear.
- Be conservative in appearance, non-offensive and will not bring discredit upon the wearer or the Navy.

- Not impede the wearing of eyeglasses.
- Plain neutral color.
- Cover the chin and extend over the bridge of the nose.

Studies indicate that neck gaiter style cloth face coverings and face coverings or masks with installed vents are **NOT** as effective in reducing the transfer of airborne particles as non-vented coverings or masks.

Neck Gaiters

Installed Vents

Use of Cloth Face Coverings to Help Slow the Spread of COVID-19

How to Wear Cloth Face Coverings

Cloth face coverings should—

- fit snugly but comfortably against the side of the face
- be secured with ties or ear loops
- include multiple layers of fabric
- allow for breathing without restriction
- be able to be laundered and machine dried without damage or change to shape

CDC on Homemade Cloth Face Coverings

CDC recommends wearing cloth face coverings in public settings where other social distancing measures are difficult to maintain (e.g., grocery stores and pharmacies), **especially** in areas of significant community-based transmission.

CDC also advises the use of simple cloth face coverings to slow the spread of the virus and help people who may have the virus and do not know it from transmitting it to others. Cloth face coverings fashioned from household items or made at home from common materials at low cost can be used as an additional, voluntary public health measure.

Cloth face coverings should not be placed on young children under age 2, anyone who has trouble breathing, or is unconscious, incapacitated or otherwise unable to remove the cloth face covering without assistance.

The cloth face coverings recommended are not surgical masks or N-95 respirators. Those are critical supplies that must continue to be reserved for healthcare workers and other medical first responders, as recommended by current CDC guidance.

Should cloth face coverings be washed or otherwise cleaned regularly? How regularly?

Yes. They should be routinely washed depending on the frequency of use.

How does one safely sterilize/clean a cloth face covering?

A washing machine should suffice in properly washing a cloth face covering.

How does one safely remove a used cloth face covering?

Individuals should be careful not to touch their eyes, nose, and mouth when removing their cloth face covering and wash hands immediately after removing.

cdc.gov/coronavirus

CS316353B 04/04/2020, 12:22 PM

Sewn Cloth Face Covering

Materials

- Two 10"x6" rectangles of cotton fabric
- Two 6" pieces of elastic (or rubber bands, string, cloth strips, or hair ties)
- Needle and thread (or bobby pin)
- Scissors
- Sewing machine

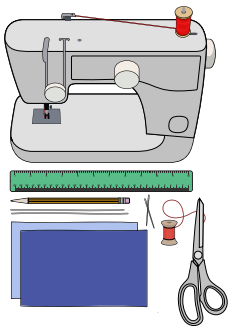

Tutorial

1. Cut out two 10-by-6-inch rectangles of cotton fabric. Use tightly woven cotton, such as quilting fabric or cotton sheets. T-shirt fabric will work in a pinch. Stack the two rectangles; you will sew the cloth face covering as if it was a single piece of fabric.

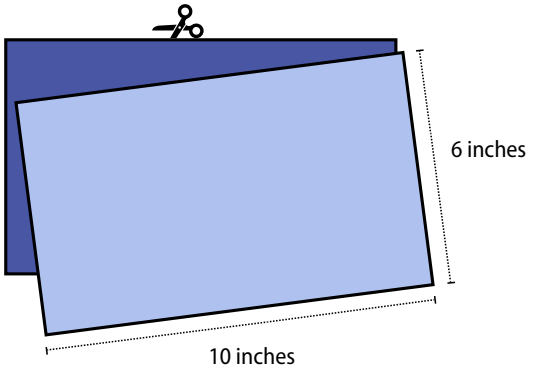

2. Fold over the long sides ¼ inch and hem. Then fold the double layer of fabric over ½ inch along the short sides and stitch down.

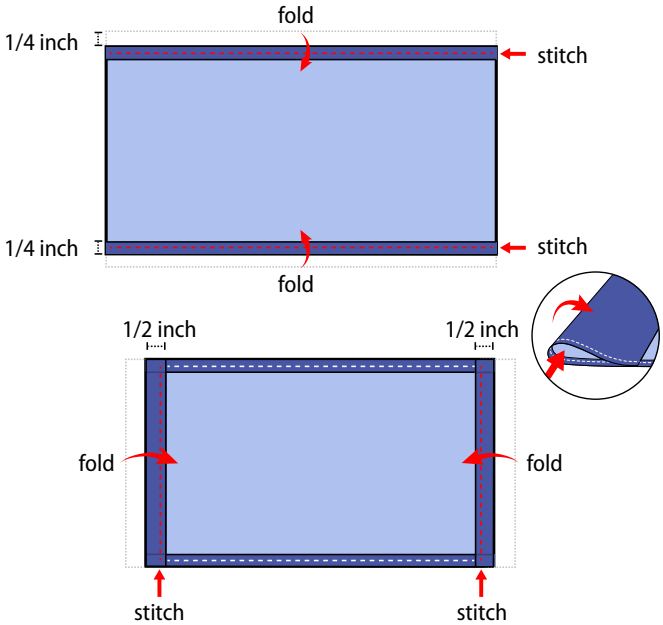

3. Run a 6-inch length of 1/8-inch wide elastic through the wider hem on each side of the cloth face covering. These will be the ear loops. Use a large needle or a bobby pin to thread it through. Tie the ends tight.
Don't have elastic? Use hair ties or elastic head bands. If you only have string, you can make the ties longer and tie the cloth face covering behind your head.

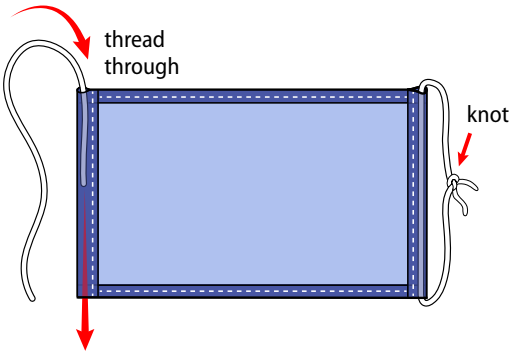

4. Gently pull on the elastic so that the knots are tucked inside the hem.
Gather the sides of the cloth face covering on the elastic and adjust so the cloth face covering fits your face. Then securely stitch the elastic in place to keep it from slipping.

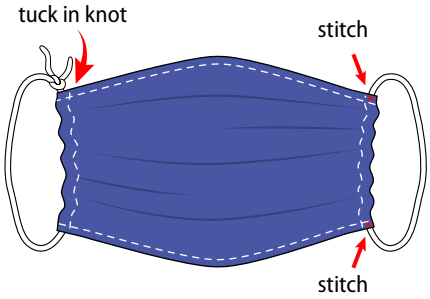

Quick Cut T-shirt Cloth Face Covering (no sew method)

Materials

- T-shirt
- Scissors

Tutorial

1.

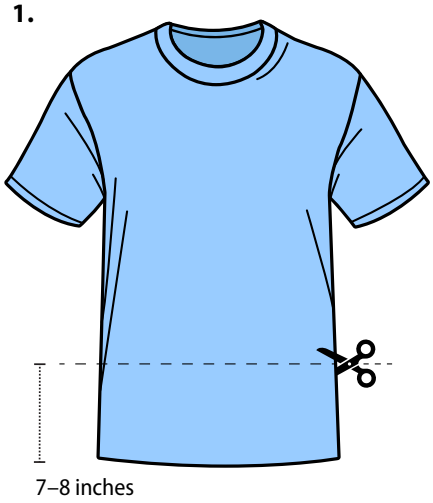

2.

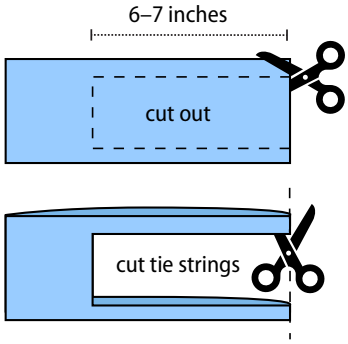

3.

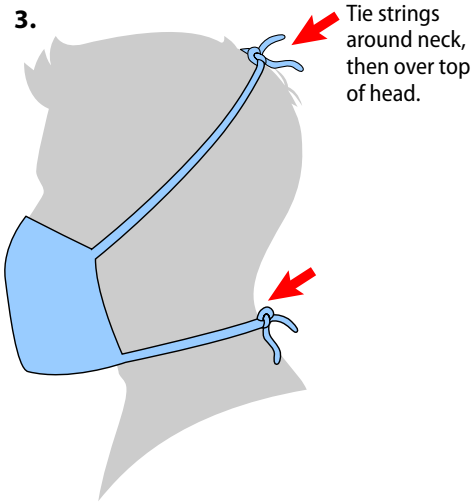

Bandana Cloth Face Covering (no sew method)

Materials

- Bandana (or square cotton cloth approximately 20”x20”)
- Coffee filter
- Rubber bands (or hair ties)
- Scissors (if you are cutting your own cloth)

Tutorial

1.

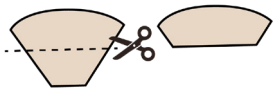

cut coffee filter

2.

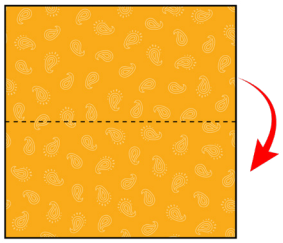

3.

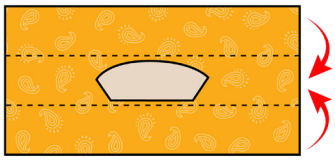

Fold filter in center of folded bandana.

Fold top down. Fold bottom up.

4.

Place rubber bands or hair ties about 6 inches apart.

5.

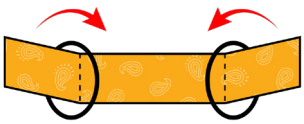

Fold side to the middle and tuck.

6.
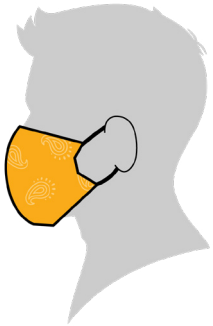
7.