DOD-STD-2106(NAVY)
31 JULY 1986

MILITARY STANDARD

DEVELOPMENT OF SHIPBOARD INDUSTRIAL TEST PROCEDURES

AMSC NO. N3889

AREA QCIC

DISTRIBUTION STATEMENT A. Approved for public release; distribution is unlimited.

DEPARTMENT OF DEFENSE

Washington, D.C. 20301

Development of Shipboard Industrial Test Procedures

DOD-STD-2106(NAVY)

This military standard is approved for use by all Commands of the Department of the Navy and it is available for use by all Departments and Agencies of the Department of Defense.

Beneficial comments (recommendations, additions, deletions) and any pertinent data which may be of use to improve this document should be addressed to: Commanding Officer, Naval Ordnance Station, Standardization/Documentation Division (524), Indian Head, MD 20640-5000 by using the self-addressed Standardization Document Improvement Proposal (DD Form 1426) appearing at the end of this document or by letter.

FOREWORD

This Standard describes an engineering process for defining test requirements and developing test outlines and test procedures for use principally in the shipyard industrial environment. It also includes a standardized format to be used in documenting those test outlines and test procedures. This Standard will normally be invoked in its entirety when test procedures are being developed for new equipment and systems or when existing equipment and systems have undergone major modification. When technically adequate test procedures exist for the same or similar equipment and systems, the requirements of this Standard may be tailored to take advantage of previous development efforts.

The decision as to when and how this Standard will be invoked on a given test program will be made by the appropriate program manager; however, it is neither the intent nor purpose of this Standard to require needless redevelopment or reformatting of technically adequate existing test documentation.

CONTENTS

Paragraph	Title	Page
1.	SCOPE	1
1.1	Principal statement	1
1.2	Applicability	1
2.	REFERENCED DOCUMENTS	2
2.1	Government documents	2
2.1.1	Specifications, standards, and handbooks	2
2.1.2	Other Government documents, drawings, and publications	2
2.2	Other publications	3
2.3	Order of precedence	3
3.	DEFINITIONS	4
3.1	Characteristic	4
3.2	Combat system	4
3.3	Contract Data Requirements List (CDRL)	4
3.4	Data Item Description (DID)	4
3.5	Equipment	4
3.6	Function	4
3.7	Shipboard industrial test	4
3.8	Inspection	4
3.9	Interface	4
3.10	Ship system	4
3.11	System	4
3.12	Test	4
3.13	Test elements	5
3.14	Test outline	5
3.15	Test procedure	5
3.16	Validation	5
3.17	Verification	5
4.	GENERAL REQUIREMENTS	6
4.1	Security classification	6
4.2	Test environment	6
4.3	Text style	6
4.3.1	Wording of text	6
4.3.2	Grammatical person and mode	7
4.3.3	Level of writing	7
4.3.4	Nomenclature	7
4.3.5	Capitalization and punctuation	7
4.3.6	Spelling	7
4.3.7	Abbreviations	8
4.3.8	Signs and symbols	8
4.3.9	Type style	8
4.3.10	Spacing requirements	8
4.3.11	Page numbering	8

CONTENTS (Continued)

Paragraph	Title	Page
4.3.12	Single-sided pages	8
4.4	Relationship of this Standard to standard Data Item Descriptions	8
5.	DETAILED REQUIREMENTS	9
5.1	Test stages	9
5.1.1	Grooming	9
5.2	Engineering process	9
5.2.1	Equipment and system definition	9
5.2.1.1	Breakdown diagram content	10
5.2.1.2	Interfaces	10
5.2.2	Test element identification	10
5.2.2.1	Functional analysis	11
5.2.2.2	Characteristics analysis	11
5.2.2.3	Interface analysis	12
5.2.3	Test element selection	12
5.2.4	Test stage determination	13
5.2.4.1	Test stage guidelines	13
5.2.4.2	Test stage assignment	13
5.2.5	Redundancy analysis	13
5.2.6	Test element grouping	14
5.2.7	Test outline preparation	14
5.2.8	Test outline submittal	15
5.2.9	Test procedure development	15
5.2.9.1	Testing steps	15
5.2.9.2	Test data recording sheet	15
5.2.9.3	Test conditions and equipment	16
5.2.9.4	General instructions	16
5.2.10	Initial test procedure submittal	16
5.2.11	Test procedure verification	17
5.2.11.1	Verification process	17
5.2.11.2	Verification Analysis Record submittal	17
5.2.12	Final test procedure development	18
5.2.12.1	Verification Record analysis	18
5.2.12.2	Final test procedure submittal	19
5.2.12.3	Reverification	19
5.3	Final documentation submittal	19
5.4	Quality assurance	19
5.4.1	Inspection of documentation	19
5.4.2	Quality assurance in-process review	19
5.4.3	Inspection of packaging	19
5.5	Packaging	19
5.5.1	Preliminary copy	20
5.5.2	Reproducible copy	20
5.5.3	Classified material	20
5.5.4	Original artwork	20
5.5.5	Container information	20
5.5.6	Packing list	20

FIGURES

Figure	Title	Page
1	Engineering Process for Test Documentation Development . .	21
2	Breakdown Diagram of Radar Receiver Transmitter Equipment.	22
3	Breakdown Diagram of Fuel Oil Service Purifier Equipment .	23
4	Breakdown Diagram of Surface Search Radar System	24
5	Breakdown Diagram of Fuel Service System	25
6	Functional Analysis Results for Surface Search Radar System	26
7	Functional Analysis Results for Fuel Oil Service Purifier Equipment	26
8	Characteristic Analysis Results for Surface Search Radar System	27
9	Characteristic Analysis Results for Fuel Oil Service Purifier Equipment	27
10	Completed Interface Analysis Form for Surface Search Radar System	28
11	Completed Interface Analysis Form for Fuel Oil Service Purifier Equipment	29
12	Completed Verification Form for Surface Search Radar System Test (2 sheets)	30/31
13	Completed Verification Form for Fuel Oil Service Purifier System Test (2 sheets).	32/33

APPENDICES

Appendix	Title	Page
A	Test Stage Definitions	35
B	Test Outline and Test Procedure Format and Content	39
C	Abbreviations and Acronyms	51
D	Ordering Data.	52
E	Tailoring Instructions	55

1. SCOPE

1.1 **Principal statement.** This Standard describes the engineering process to be used in the development of the content of shipboard industrial test procedures for equipment and systems.

1.2 **Applicability.** This Standard is intended to be used by either contractor or Navy organizations in the development of industrial test procedures for shipboard equipment and systems. It applies to test procedures used during initial installation, after repair or modification, and after extended shutdown periods. The Standard applies to test procedures used during ship construction, modernizations, overhauls, and restricted availabilities.

2. REFERENCED DOCUMENTS

2.1 Government documents.

2.1.1 **Standards.** Unless otherwise specified, the following standards of the issue listed in that issue of the Department of Defense Index of Specifications and Standards (DoDISS) specified in the solicitation form a part of this standard to the extent specified herein.

STANDARDS

MILITARY

MIL-STD-12	Abbreviations for Use on Drawings, Specifications, Standards, and in Technical Documents
MIL-STD-17-1	Mechanical Symbols
MIL-STD-1364	Preferred General Purpose Electronic Test Equipment

2.1.2 **Other Government documents and publications.** The following other Government documents and publications form a part of this standard to the extent specified herein.

PUBLICATIONS

FEDERAL

Cataloging Handbook H4	Federal Supply Code for Manufacturers
Library of Congress Catalog No. Z253.U58	United States Government Printing Office Style Manual

DEPARTMENT OF DEFENSE

DOD 5220.22M	Industrial Security Manual for Safeguarding Classified Information

DEPARTMENT OF THE NAVY

NAVSEA OP 1700	Standard Fire Control Symbols

(Copies of standards and publications required by contractors in connection with specific acquisition functions should be obtained from the contracting activity or as directed by the contracting officer.)

2.2 **Other publications.** The following documents form a part of this standard to the extent specified herein. Unless otherwise specified, the issues of the documents which are DOD adopted shall be those listed in the issue of the DODISS specified in the solicitation. The issues of the documents which have not been adopted shall be those in effect on the date of the cited DODISS.

AMERICAN NATIONAL STANDARDS INSTITUTE (ANSI)

ANSI Y14.15	Electrical and Electronics Diagram

(Application for copies should be addressed to the American National Standards Institute, 1430 Broadway, New York, NY 10018.)

INSTITUTE OF ELECTRICAL AND ELECTRONICS ENGINEERS (IEEE)

IEEE STD 91	Graphic Symbols for Logic Functions
IEEE STD 200	Reference Designations for Electrical and Electronic Parts and Equipment (same as ANSI Y32.16)
IEEE STD 315	Graphic Symbols for Electrical and Electronic Diagrams (including Reference Designation Class Designation Letters (same as ANSI Y32.5)

(Application for copies should be addressed to the Institute of Electrical and Electronic Engineers, Standards Operations, 345 East 47th Street, New York, NY 10017.)

(Nongovernment standards are generally available for reference from libraries. They are also distributed among non-government standard bodies and using Federal agencies.)

2.3 **Order of precedence.** In the event of a conflict between the text of this standard and the references cited herein, the text of this standard shall take precedence.

3. DEFINITIONS

3.1 **Characteristic.** Any quality, property, capacity, or trait of an equipment or system.

3.2 **Combat system.** A combination of equipment and systems that operate in concert to accomplish the functions of detecting, tracking, identifying, processing, evaluating, and controlling the engagement of hostile threats either actively or passively.

3.3 **Contract Data Requirements List (CDRL).** A contract form which provides in one place in the contract, a list of data items required to be delivered under the contract. DD Form 1423 is used for this purpose.

3.4 **Data Item Description (DID).** A form which defines the format and content of a single deliverable data product. DD Form 1664 is used for this purpose.

3.5 **Equipment.** A single unit of hardware or a closely related group of hardware units that is essentially irreducible for purposes of testing.

3.6 **Function.** Any action or operation that an equipment or system is intended to perform that can be demonstrated through testing.

3.7 **Shipboard industrial test.** A test conducted aboard ship to verify acceptable operation following installation, reinstallation, overhaul, repair, or periods of inactivity.

3.8 **Inspection.** A qualitative examination of the physical aspects of production, construction, and installation; e.g., workmanship, completeness of work, material condition, physical location.

3.9 **Interface.** A connection between two equipment items or systems.

3.10 **Ship system.** A combination of equipment that operates in concert to accomplish all of the active and passive functions associated with propulsion, electrical, hull, or auxiliary features of a ship.

3.11 **System.** A combination of two or more equipment items that operate in concert to accomplish an operational function or set of functions.

3.12 **Test.** A predetermined set of conditions, operations, and measurements that enable quantitative assessment of equipment and system operability and readiness to support mission objectives. Tests are documented by test procedures and performed as part of the industrial test program.

3.13 **Test elements.** Functions, characteristics, or interfaces that may be verified or demonstrated through testing.

3.14 **Test outline.** A summary description of a single test procedure. For test documentation prepared in accordance with this Standard, the test outline is the general information contained at the front of each test procedure.

3.15 **Test procedure.** A detailed step-by-step description of the operations to be performed during the conduct of a specific test. Test procedures include information and forms required to plan for and conduct the test; e.g., test equipment required, estimated test time, test data recording sheets, expected results, and other related information.

3.16 **Validation.** Verifying the feasibility, safety, accuracy, and efficiency of a test procedure through conduct in the environment for which the test was written. Validation is one method of verification.

3.17 **Verification.** A process by which the feasibility, safety, accuracy, and efficiency of a test procedure is evaluated through performance of the test. The test procedure may be performed aboard ship, in a land-based test site or industrial plant, or at some other appropriate facility.

4. GENERAL REQUIREMENTS

4.1 **Security classification.** The security classification of material used for development of test documentation shall be specified in the acquisition document. The use of classified test documentation shall be avoided whenever possible. When the use of classified material cannot be avoided, every effort should be taken to write the test procedure in such a manner that classified sections may be easily removed. The developing organization shall have initial responsibility for determining the security classification of test documentation. Approval of this classification shall be the responsibility of the acquisition command or agency.

4.2 **Test environment.** Each test procedure developed in accordance with this Standard shall be designed for use in the shipyard industrial test environment aboard a ship. Consideration shall be given to safety, power, ventilation, cooling water, shipyard personnel, and other factors that may distinguish the shipboard environment from the factory or shop environment. The final test procedures used aboard ship shall not contain information unique to off-ship test facilities.

4.3 **Text style.** Test documentation shall be prepared in accordance with the style specified in the following paragraphs.

4.3.1 **Wording of text.** Procedural steps shall be presented in language which is free of vague and ambiguous terms and which uses simple words and phrases to convey the intended meaning. The following guidelines shall be applicable when developing text for test documents.

a. Omit theory.

b. Avoid phraseology requiring specialized knowledge.

c. Avoid superfluous and ambiguous words and phrases.

d. Write sentences as short and concise as possible.

e. Use consistent phraseology throughout the text for common actions or events.

f. Omit unnecessary articles and pronouns.

THIS: Observe indicator blinks.
NOT THIS: Observe that the indicator blinks.

4.3.2 **Grammatical person and mode.** The second person imperative shall be used for test procedure operations. For example, "Remove rammer tank fluid filler cap." Description and observation statements should be written in present tense with the assumption that everything is operating correctly. For example, "Observe that indicator flashes" and not "Indicator should flash."

4.3.3 **Level of writing.** The content of the test procedures shall be written at a level that is suitable for a test conductor who is familiar with similar types of equipment and has shipboard industrial testing experience.

4.3.4 **Nomenclature.** Consistency in the use of words and phrases is essential in order to achieve clarity. The following requirements shall apply.

a. Be consistent in the use of words. For example, a part identified initially as a cover shall not be identified thereafter as a plate.

b. Terms used shall agree with the same name on related engineering and design drawings and on identification plates. Put numerical designators first and descriptive nomenclature following; for example, AN/SPG-55B Radar Set. If there is no numerical designator,then use terms such as Converter, Angle Data; or Turbine Generator, Ship Service. This allows the least significant descriptive words to be dropped as necessary to accommodate computer formats.

c. When two or more items have the same nomenclature, modifiers shall be added to define the function or location of each item. For example, AN/UYK-20 (Comm) and AN/UYK-20 (WDS); AN/SPA-25D (CIC) and AN/SPA-25D (Bridge); Davit -5000 lb, Port and Davit - 5000 lb, Starboard.

d. The first time an equipment item is addressed it shall be fully identified. For example, MK 1 MOD 1 Missile Test Set introduces the equipment by its full official nomenclature. The MK and MOD designations may be omitted thereafter or an abbreviation may be used. Abbreviations or acronyms shall be used only if they have previously been introduced in association with the nomenclature being abbreviated; for example, Missile Test Set (MTS).

e. Where more than one MOD of equipment is described, each MOD shall be indicated. For example, MK 6 MOD 0 and 1 Magazines.

4.3.5 **Capitalization and punctuation.** The Government Printing Office Style Manual shall be used as a guide for capitalization and punctuation.

4.3.6 **Spelling.** The Government Printing Office Style Manual shall be the authority for spelling. A dictionary will be consulted when the Style Manual does not provide the guidance needed.

4.3.7 **Abbreviations.** The use of abbreviations shall be avoided whenever practicable. When used, abbreviations shall be in accordance with MIL-STD-12. Abbreviations not in accordance with MIL-STD-12 shall reflect general Navy usage and may be used only with permission of the contracting organization.

4.3.8 **Signs and symbols.** The use of symbols shall be avoided whenever practicable. When used, signs and symbols shall be as listed in the Government Printing Office Style Manual. The following additional rules shall be observed in the use of symbols.

a. Fire control symbols shall be in accordance with NAVSEA OP 1700.

b. Chemical symbols shall not be used unless they form part of the nomenclature. In lieu of symbols, use the chemical names such as carbon dioxide and hydrogen peroxide.

c. Graphic symbols shall be in accordance with IEEE STD 315 for electrical and electronic diagrams, MIL-STD-17-1 for mechanical parts, and IEEE STD 91 for logic diagrams.

d. Reference symbols and designations for electrical and electronic parts and assemblies shall be as marked on the equipment. When not marked on equipment, they shall be as specified in ANSI Y14.15, IEEE STD 200 and in supplements thereto.

4.3.9 **Type style.** Unless otherwise specified in the contract or order, type style shall be letter gothic. Consideration should be given to consistency of type style, applicability for automatic input to a word processing system, and ease of reading in dimly lighted shipboard spaces.

4.3.10 **Spacing requirements.** Test procedures shall be single-spaced with an extra space between paragraphs, subparagraphs, testing steps, warnings, cautions, or notes.

4.3.11 **Page numbering.** Pages shall be numbered consecutively beginning with the cover sheet. The first page number shall also indicate the total number of pages in the document as follows: Page 1 of ___.

4.3.12 **Single-sided pages.** Test procedures shall be printed and reproduced on single-side only.

4.4 **Relationship of this Standard to standard Data Item Descriptions.** This Standard provides direction for developing the data items addressed by the standard Data Item Descriptions listed in paragraph 50.2 of Appendix D.

5. DETAILED REQUIREMENTS

5.1 **Test stages.** Testing of shipboard equipment and systems is conducted in stages with each progressive stage building upon the results of testing at prior stages. Thus, overall system integrity is based upon the results of all required stages of testing. The seven discrete stages of industrial testing have been defined in Appendix A with examples provided for stages 2 through 7. This Standard is applicable to tests in stages 3 through 7.

5.1.1 **Grooming.** General equipment grooming, alignment, and adjustments are considered to be part of the industrial work and are not normally included in the test procedure.

5.2 **Engineering process.** The engineering process specified in this section provides a structured method for the development of test procedures that will demonstrate the initial acceptable performance of equipment and systems in ships from test stages 3 through 7. This process is depicted in block form in figure 1 and consists of the followings steps.

a. Equipment/system definition.

b. Test element identification.

c. Test element selection

d. Test stage determination.

e. Redundancy analysis.

f. Test element grouping.

g. Test outline preparation.

h. Test outline review and approval.

i. Test procedure development.

j. Test procedure review and approval.

k. Test procedure verification.

l. Final test procedure development.

5.2.1 **Equipment and system definition.** The initial step in the development of test procedures is to identify the hardware to be tested. This hardware is then classified as an equipment to be tested at stage 3 or a system to be tested at stages 4 and/or 5. Classifying the hardware as a system does not imply that stage 3 tests will not also be required, and classification as an equipment does not imply that stages 4 and 5 tests will not be required. The equipment or system classification is based on previous test experience and intimate knowledge of the hardware and the ship

environment. The following factors shall be considered in making this determination.

a. Hardware configuration and packaging.

b. Functional compatibility of the hardware packages.

c. Complexity of the individual hardware packages.

d. Complexity of the larger system of which this hardware is a part, or the complexity of the components that comprise this hardware packaging.

e. Shipboard test conditions that favor testing at one stage over another.

Hardware classified as an equipment or system shall be defined in a breakdown diagram. When specified in the contract or order, breakdown diagrams shall be submitted.

5.2.1.1 **Breakdown diagram content.** The equipment or system to be tested shall be represented by one or more functional blocks enclosed in heavy or double lines. Each block shall represents an independent functional unit. External equipment or systems that interface with the equipment or system to be tested shall also be shown. External and internal interfaces shall be shown on breakdown diagrams.

5.2.1.2 **Interfaces.** Equipment and systems are connected by interfaces. Interfaces can be electrical, optical, liquid, gas, or mechanical. Each type of interface shall be indicated by a separate line. Internal interfaces are defined as those interfaces that are within the system to be documented. External interfaces are defined as those that functionally tie the equipment or system to be tested with other equipment or systems. Services with organic ship systems such as 400-Hz power, 28 VDC, and cooling water are external interfaces. Services may be designated on the breakdown diagram by a single line with a descriptive title. External interfaces shall be designated by numbers and internal interfaces shall be designated by letters. Figures 2 through 5 illustrate breakdown diagrams for typical equipment and systems.

5.2.2 **Test element identification.** After the equipment or system has been defined in a breakdown diagram, test elements shall be identified. A test element is any property of an equipment or system that can be evaluated through testing. Test elements are identified by performing a functional analysis, characteristic analysis, and interface analysis. Instructions for performing these analyses are provided in paragraphs 5.2.2.1, 5.2.2.2, and 5.2.2.3, respectively. Each analysis will result in a list of test elements. Each list shall then be screened to select those test elements that are appropriate for industrial testing in accordance with the instruction provided in paragraph 5.2.3.

5.2.2.1 **Functional analysis.** An analysis shall be accomplished to identify each function performed by the equipment or system to be tested. The functions of an equipment or system are the actions or operations it is intended to perform. Each function so identified represents a test element to be considered for inclusion in the test outlines and test procedures to be developed. In performing this analysis, the following approach shall be taken to ensure that the list of test elements generated will be comprehensive and accurate.

a. Identify the major purpose of the equipment or system to be tested. If the purpose is complex, it may be divided into two or more discrete functions.

b. List all other significant actions or services performed by this unit.

c. Examine each block on the breakdown diagram to ensure that all actions or services performed by the equipment that comprise the system under test are reflected in the list of functions.

d. Use the information developed in steps a through c above to generate a list of test elements.

The results of two sample functional analyses are presented in figures 6 and 7.

5.2.2.2 **Characteristics analysis.** An analysis shall be performed on the equipment or system to be tested and its parts (represented by blocks on the breakdown diagram) to identify those characteristics that significantly impact the manner and degree to which this equipment or system performs its intended function. The procedure for conducting this analysis is to analyze each breakdown diagram block comprising the equipment or system to be tested. This analysis may involve only one block for simple equipment or several blocks for complex systems. In this analysis, each salient characteristic is screened in accordance with the following criteria.

a. Does this characteristic determine how well the intended function is performed?

b. Does this characteristic distinguish a properly operating equipment or system from one that is not?

c. Does this characteristic require adjustment or alignment to ensure proper equipment or system functioning?

A positive response to any of the above questions is indicative of a charactertistic that should be included in the list of test elements. If a system is being analyzed, the system shall then be considered as a whole. Any characteristics of the system that have not been previously identified through analysis of its component parts should be analyzed in accordance with steps a through c above. The separate lists of characteristics generated when a system is analyzed in this manner shall be combined to form one consolidated

list of characteristics. Each of these characteristics represents a test element that shall be considered for inclusion in the test outlines and test procedures. Figures 8 and 9 are sample lists of test elements resulting from characteristics analyses.

5.2.2.3 **Interface analysis.** When breakdown diagrams are prepared, the mechanical, electrical, liquid, optical, and gas interfaces are each represented by a single line. Each single line may be composed of several signals and/or connections between equipment. When specified in the contract or order, interface analysis records shall be submitted. The first step in interface analysis shall be to list on an interface analysis form, all of the electrical or optical signals and liquid, gas, or mechanical connections that comprise each interface. Examples of completed interface analysis forms (records) are presented in figures 10 and 11. Each item listed on the interface analysis form shall be identified by a brief descriptive title that focuses on its salient characteristics. Individual items shall then be analyzed to determine if they are appropriate for testing. Guidance to make this determination shall be based in the following questions.

a. Must this interface be tested in order to demonstrate satisfactory equipment performance?

b. Does this interface require checkout prior to equipment operation?

c. Would testing of this interface provide information concerning a potentially unsafe or hazardous condition of the equipment?

d. Is measurement of this interface a necessary prerequisite to further testing?

Responses to these questions shall be indicated on the interface analysis form. A positive response to any of these questions is an indication that the interface should be considered for testing. The result of interface analysis is a list of recommended interface test elements.

5.2.3 **Test element selection.** The lists of test elements resulting from functional, characteristics, and interface analyses shall be screened to determine which elements are appropriate for industrial testing. The objective of industrial testing is to demonstrate the ability of shipboard equipment and systems to perform their intended function. Compliance with design specifications shall be assumed to have been demonstrated in previous testing. Consequently, only those elements that meet one or more of the following criteria shall be selected for inclusion in the test outlines and test procedures to be developed.

a. Elements that are essential to equipment performance and operation.

b. Elements whose performance may be seriously degraded by shipping, installation, or shipboard environment.

c. Elements whose performance is affected by post-installation adjustments.

d. Elements whose performance is essential to overall system performance or to operation of other equipment.

e. Elements that provide indication of safe operation.

f. External interface elements that must be verified prior to operation of the equipment under test.

The results of this analysis shall be a composite list of test elements selected for industrial testing.

5.2.4 **Test stage determination.** When preparing test procedures and test outlines for a test stage, the test document developer shall decide which test elements are appropriate for evaluation at that stage and which elements should be evaluated at higher or lower stages.

5.2.4.1 **Test stage guidelines.** As a general rule any function, characteristic, or interface required to adequately demonstrate equipment performance shall be tested at stage 3, system performance at stage 4, and intersystem performance at stage 5. Test elements that require special simulation facilities or significant resources external to the immediate testing location shall be tested at stage 6. Test elements which require testing at sea shall be evaluated at stage 7. Test elements evaluated in lower level tests that need to be re-evaluated during trials should be designated for testing at both stages. Although seven stages of testing are defined, it is not intended to require testing at each stage for each equipment or system. For example, stand-alone equipment may be tested at stage 3 only and other systems may not lend themselves to equipment level testing.

5.2.4.2 **Test stage assignment.** Using test stage definitions found in Appendix A and the test stage guidelines of paragraph 5.2.4.1, the test elements shall be separated into two lists; (1) those elements which are appropriate for testing at the stage for which test procedures are being prepared, and (2) those elements which are appropriate for testing at another stage for which the test developer is not responsible. When specified in the contract or order, those test elements that are candidates for testing at a another stage for which the developer is not responsible shall be listed with their recommended test stage and submitted.

5.2.5 **Redundancy analysis.** Prior to preparation of test outlines, the list of test elements shall be reviewed to eliminate redundant testing within the stage for which documentation is being prepared. Each characteristic designated for testing at a given stage shall be analyzed to determine if the adequacy of that characteristic would be implicitly demonstrated by successful performance of a function designated for testing at that same stage. Characteristics meeting this criteria may be eliminated from further consideration as test elements. Interface test elements should be compared with the list of functions and characteristics designated for testing at the same stage. Interface test elements whose adequacy would be implicitly demonstrated by successful performance of a previously identified function or characteristic may be eliminated.

Elimination of all testing redundancies is not mandatory. On occasion, the added confidence gained through redundant testing outweighs the savings in reduced test time. This tradeoff requires the exercise of good judgment by the test document developers. When the redundancy analysis has been completed, the result shall be elimination of redundant test elements, wherever practicable.

5.2.6 **Test element grouping.** The test elements that remain after completion of redundancy analysis shall be optimized for efficient test conduct by combining elements into test groups. These test element groups shall be converted to test outlines and subsequently to test procedures on a one-to-one basis; therefore, considerable care shall be exercised to group test elements in a manner that will produce maximum shipboard testing efficiency. The test developer shall consider similarities in the following areas as a guide to grouping test elements.

a. Test approach.

b Inputs from other systems or services such as steam, cooling water, 60-Hz or 400-Hz power.

c. Computer programs.

d. Special support equipments and resources.

e. Other practical considerations identifiable at this point.

Examples of groupings include (1) all elements associated with gun loading; (2) all elements associated with initial checkout of a countermeasures receiver; (3) all elements associated with launcher hydraulics; and (4), all elements associated with initial start up of a diesel or gas turbine. This redundancy analysis will result in one or more groups of test elements which shall be the basis for preparation of test outlines. When specified in the contract or order, a list of nonredundant test elements which is the basis for proposed test outlines shall be submitted prior to their preparation.

5.2.7 **Test outline preparation.** A test outline shall be prepared as prescribed by Appendix B for each test element group identified in paragraph 5.2.6. The test outline may be used to:

a. Allow the test contracting agent to review the test development approach prior to test procedure completion;

b. Provide the industrial activity preliminary information for scheduling and manpower planning;

c. Supply a description of test procedure content for all levels of management; or,

d. Provide preliminary bidding information.

The information provided in the test outline shall be based on the best information available at this point in the development cycle and shall be supplemented by sound engineering judgment.

5.2.8 **Test outline submittal.** When specified in the contract or order, test outlines (refer to paragraph 5.2.7) and list of related test elements (refer to paragraph 5.2.4.2) shall be submitted.

5.2.9 **Test procedure development.** After submittal of a test outline, a stand-alone test procedure shall be developed from the test outline. The format and content of each test procedure shall be as prescribed in Appendix B.

Because the contents of all other test procedure sections depend to some degree on the testing steps, test procedure preparation shall begin with the development of the TESTING STEPS section.

5.2.9.1 **Testing steps.** The TESTING STEPS section of each test procedure shall provide detailed instructions for test implementation. Each testing step in the test procedure shall be defined and sequenced to ensure that the test procedure can be efficiently performed. The METHOD section of the test outline provides the starting point for testing steps development; each test step represents an expansion and detailed explanation of the general approach presented in the METHOD section. In many cases these steps will have been previously developed in other similar test procedures. Testing steps from similar procedures should be examined to determine if they could be modified to fulfill the current requirements. Some potential sources of testing steps are factory acceptance test procedures, maintenance requirement cards, technical repair standards, technical manuals, specifications, standards, and test document repositories. The instructions as written shall be self-contained and not refer to steps, paragraphs, or sections of technical manuals or other publications. When testing steps are being developed or modified, and when the optimum sequence is being determined, the following factors should be considered.

a. Economical use of test personnel.

b. Use of standard shipboard test equipment as defined in MIL-STD-1364.

c. Economical use of support equipment.

d. Minimizing the requirements for external support.

e. Steps must be practical to perform in a shipboard environment

f. Do not include steps that require adjustment of the equipment under test.

Testing steps shall be documented as specified by Appendix B for format and content.

5.2.9.2 **Test data recording sheet.** The TEST DATA RECORDING sheet provides a place for recording each indication required in the testing steps and it

provides a clear statement of expected results including applicable tolerances. After the testing steps have been developed, the most critical aspect of test procedure development is to specify the expected results. Data to be used in the establishment of expected results can be found in operational requirements documents, specifications, factory acceptance test criteria, maintenance requirement cards, technical repair standards, and technical manuals; however, the tolerances found in these documents may require modification prior to use in industrial test procedures. The purpose of industrial testing is not to determine if the system or equipment is performing to specification (factory acceptance tests); rather, the purpose is to verify that the system or equipment as installed will meet performance requirements for that ship. Therefore, the tolerances used for shipboard industrial testing may be different from those found in specifications or in factory acceptance tests. Performance limits for shipboard industrial testing shall be established such that performance outside these limits would be indicative of one or more of the following factors.

a. Serious degradation in the ability of the system or equipment to perform its intended function.

b. Abnormal or marginal operating condition that may indicate or result in equipment failure or low post-repair reliability.

c. Inability of the system or equipment to interface properly with other equipment or systems.

These performance limits become the expected results and appropriate tolerances for the EXPECTED RESULTS column of the TEST DATA RECORDING sheet. The format and content for the TEST DATA RECORDING sheet shall be as specified in Appendix B.

5.2.9.3 **Test conditions and equipment.** After the testing steps have been specified and arranged in the appropriate sequence, the INITIAL CONDITIONS AND SETUP, SHUTDOWN AND SECURING, and TEST EQUIPMENT USED sheets shall be prepared. Format and content guidance for preparation of these paragraphs is included in Appendix B.

5.2.9.4 **General instructions.** The TEST OUTLINE section of the test procedure provides the general instructions relating to the TESTING STEPS section. The general instructions provided by the TEST OUTLINE section shall be reviewed and updated prior to preparation of the test procedure to ensure that these instructions are consistent with the TESTING STEPS developed in paragraph 5.2.9.1. SAFETY INSTRUCTIONS shall be added to the test procedure in accordance with the format and content requirements provided by Appendix B.

5.2.10 **Initial test procedure submittal.** When specified in the contract or order, existing test procedures shall be submitted for approval for reapplication in lieu of the preparation of new test procedures. In the absence of technically adequate existing test procedures or as specified in the contract or order, preliminary new test procedures shall be submitted prior to verification.

5.2.11 **Test procedure verification.** All test procedures shall be verified. The purpose of verification is to:

a. Ensure that the equipment or system can be safely tested;

b. Affirm that the testing steps can be performed as written and in the specified sequence;

c. Determine if the testing steps represent the most efficient and practical method for accomplishing the desired results;

d. Determine if extraneous influences exist that may prevent the accomplishment of the intended results;

e. Verify the expected results presented in the TEST DATA RECORDING sheets; and,

f. Verify SAFETY INSTRUCTIONS, TEST EQUIPMENT USED, and other pertinent sections of the test procedure.

5.2.11.1 **Verification process.** Verification shall be accomplished by performing the testing steps in the indicated sequence to accomplish the purposes listed above. Problems shall be corrected and potential improvements shall be incorporated in the final document. Two approaches to verification are:

a. Verification of test procedures during first time use in a shipboard test program (validation); and

b. Verification of test procedures prior to use by performing the test in an industrial plant, at a land-based test site, or aboard a ship.

The type of verification required for each test procedure shall be as specified in the contract or order (see Appendix D paragraph 50.1). If verification is accomplished through validation, the discrepancies and problem will be identified and corrected through the established change control process. If verification is accomplished prior to use, a Verification Analysis form shall be completed and the procedures of paragraphs 5.2.11.2 through 5.2.12.4 shall be followed.

5.2.11.2 **Verification Analysis record submittal.** The Verification Analysis form provides a means of documenting problems and potential improvements noted during test procedure verification. Figures 12 and 13 are samples of completed verification forms (records). Instructions for completion of this form are provided in the following paragraphs. When specified in the contract or order, Verification Analysis records shall be submitted.

5.2.11.2.1 **Time.** Beginning and ending times shall be recorded and elapsed time calculated for comparison with the estimated testing time given in the test procedure. The elapsed time shall include setup and shutdown procedures. If testing is interrupted prior to completion, multiple start and stop times shall be recorded to permit calculation of total elapsed time required for the test.

5.2.11.2.2 **Test steps**. As they are performed, each testing step shall be examined for safety, necessity, practicality, and proper sequence. Guidelines for this examination are provided below.

a. Safety. Can this step be performed without potential hazard to personnel or equipment? Is the step sufficiently trouble-free so that inexperienced personnel would not require any special warnings or cautions?

b. Necessity. Consider why this step is being performed. Is it essential to proper performance of this test?

c. Practicality. Can this test be performed in the manner described by the test procedure? Is this the most practical way to perform the step?

d. Sequence. Consider why this step is being performed at this point in the procedure. Is this the most appropriate place within the procedure to perform this step?

e. Ambiguity: Can the instruction be misintepreted? Is it subject to more than one interpretation?

Any problems noted shall be documented by listing the testing step involved and providing a brief description of the problem. If the solution to the problem is evident, it shall be entered in the RECOMMENDED CHANGE column. If testing steps do not contain a specific problem but could be improved, then enter the appropriate information in the RECOMMENDED CHANGE column.

5.2.11.2.3 **Test data discrepancies**. When a test procedure is being verified and the actual test results do not agree with the expected results, both results shall be recorded in Section II of the Verification Analysis form. Differences in test environment, equipment status, or other test conditions that may have contributed to this discrepancy should be documented in the COMMENT column.

5.2.11.2.4 **Support**. If actual requirements for test equipment, computer programs, or personnel differ from those listed in the test procedure, a check shall be placed in the NO column beside the appropriate category in Section III of the Verification Analysis form. A brief description of the discrepancy should be provided for each check in the NO column.

5.2.12 **Final test procedure development**. Final test procedures shall be developed by incorporation of improvements resulting from test procedure verification. The finalization process requires three steps which are analysis of verification records, revision of test procedures, and reverification of updated test procedures.

5.2.12.1 **Verification record analysis**. Verification records for every test procedure shall be reviewed by the test documentation developer to determine the modifications required to optimize that procedure. Elapsed time shall be checked against the estimated time listed in the test procedure and deviations of greater than 10-percent shall be considered for modification. Testing

steps that are unsafe shall be changed or have the required warnings and cautions added. As necessary, impractical steps shall be altered, unnecessary steps eliminated, and improper testing sequences reordered to make the procedures practical and efficient. Test data discrepancies shall be analyzed to determine if the discrepancy was due to test conditions or test procedure error. Omissions in the areas of test equipment, computer programs, or personnel shall be corrected and unnecessary requirements shall be eliminated.

5.2.12.2 **Final test procedure submittal.** When specified (see 5.3), final test procedures shall be submitted after the verification process. Final test procedures shall be prepared by revising the preliminary procedures to reflect the decisions resulting from the verification analysis.

5.2.12.3 **Reverification.** In cases where the verification resulted in a major revision of a test procedure, reverification may be required. The decision on whether or not to reverify shall be made by the procuring organization and will be based on the extent to which revised testing steps required new or different methods. Unless these new methods or steps are sufficiently complex to require verification through actual performance, reverification shall not be required.

5.3 **Final documentation submittal.** When specified in the contract or order, submission of final test procedures and test outlines shall consist of copy prepared for single-sided reproduction. A reproducible copy of test outlines and procedures including final art work shall be prepared in the format specified in Appendix B. Any corrections to the reproducible copy shall be made so as to be invisible when reproduced. The contracting organization may conduct a final review of the reproducible copy before delivery.

5.4 **Quality assurance.** Document quality assurance shall be the responsibility of the test document developer and shall include the inspection and review requirements specified in the following paragraphs. The contracting organization will participate to the extent provided for in the contract or order.

5.4.1 **Inspection of documentation.** Each test outline and test procedure submitted by terms of the contracting document as deliverable items shall be inspected for compliance with the requirements of this Standard. Unless otherwise specified in the contract or order, the test document developer shall be responsible for the performance of this inspection.

5.4.2 **Quality assurance in-process review.** The contracting organization or designated agent will perform in-process reviews. The test document developer shall provide support and material for these reviews as required.

5.4.3 **Inspection of packaging.** The packaging shall be inspected for compliance with this Standard.

5.5 Packaging. Unless otherwise specified, the material furnished in accordance with this Standard shall be packaged as specified in the following paragraphs.

5.5.1 Preliminary copy. Preliminary copies shall be packaged flat in the most appropriate containers. The artwork and text material may be in one or in separate containers. If submitted for review purposes only, copies of large artwork may be folded. The containers shall provide protection against types of damage that frequently occur during shipping

5.5.2 Reproducible copy. Reproducible copy shall be packed flat and double packaged. Artwork shall not be folded. The packaging material shall be waterproof and free of any chemical substance that would discolor or otherwise render the reproducible copy useless. The exterior package shall be a standard commercial carton at least equal to interstate commerce standards and of sufficient strength to protect the reproducible copy against forms of damage that frequently occur during shipping.

5.5.3 Classified material. Classified material shall be packaged in accordance with DOD 5220.22-M.

5.5.4 Original artwork. Unless otherwise specified in the contract or order, the original artwork shall be furnished and packaged as stated in the contract or order. For example, an original oversize line drawing on vellum or tracing cloth could be rolled if the contract or order so authorizes.

5.5.5 Container information. In addition to sender and addressee information, the exterior of each container shall bear the following information:

a. Document identifying number.

b. Contract or purchase order number

c. "Preliminary Copy," when applicable.

d. "Reproducible Copy." when applicable.

e. "Original Artwork," when applicable.

f. Number of containers in the shipment.

5.5.6 Packing list. A copy of the letter of transmittal or the packing list shall be placed inside the carton or container. When a shipment consists of several containers, the letter of transmittal or packing list shall be enclosed in the first container and shall identify the material that was packed in each container.

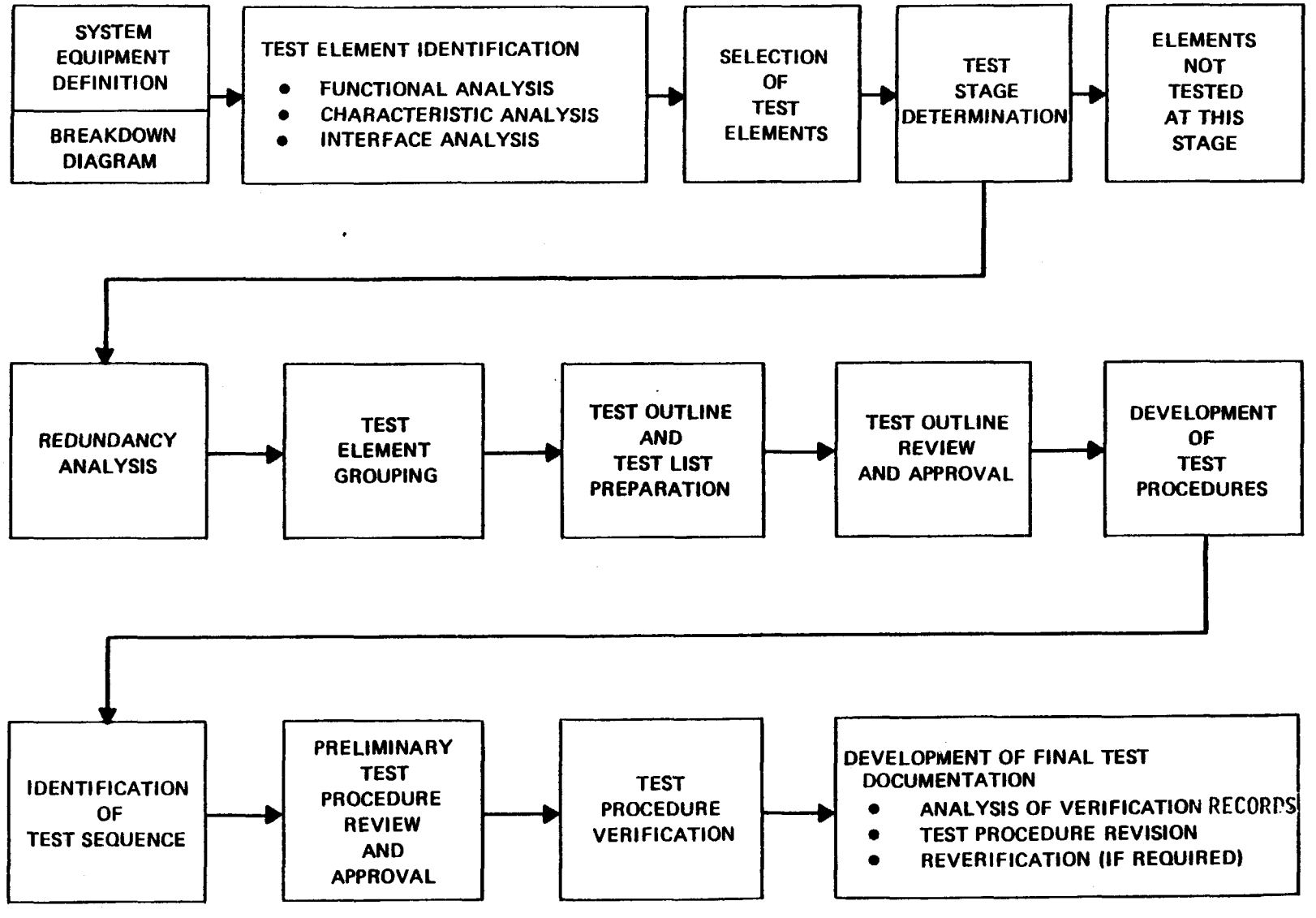

Figure 1. Engineering Process for Test Documentation Development

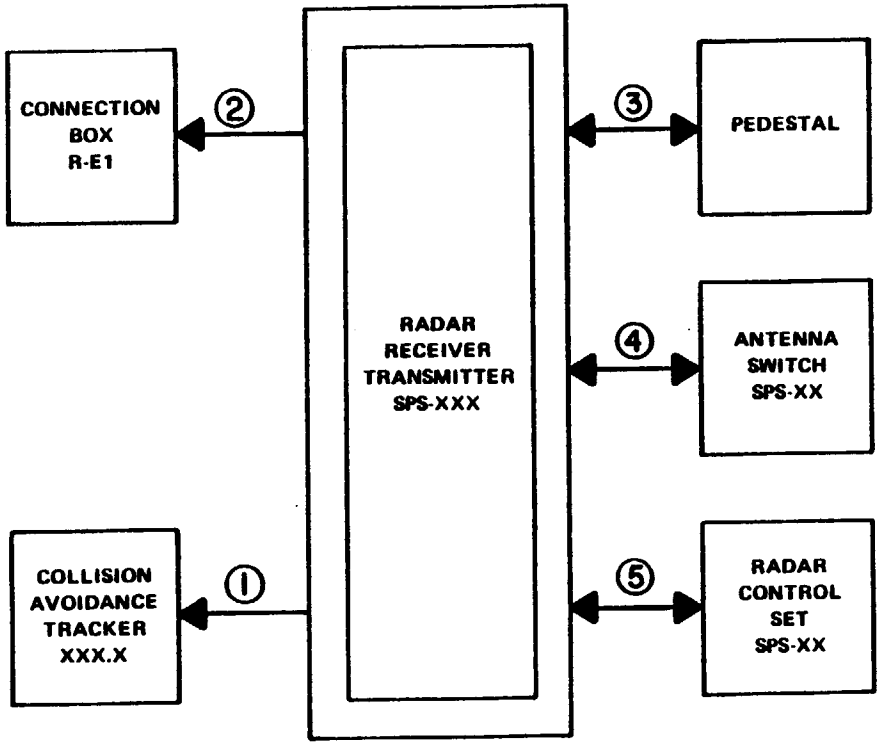

Figure 2. Breakdown Diagram of Radar Receiver Transmitter Equipment

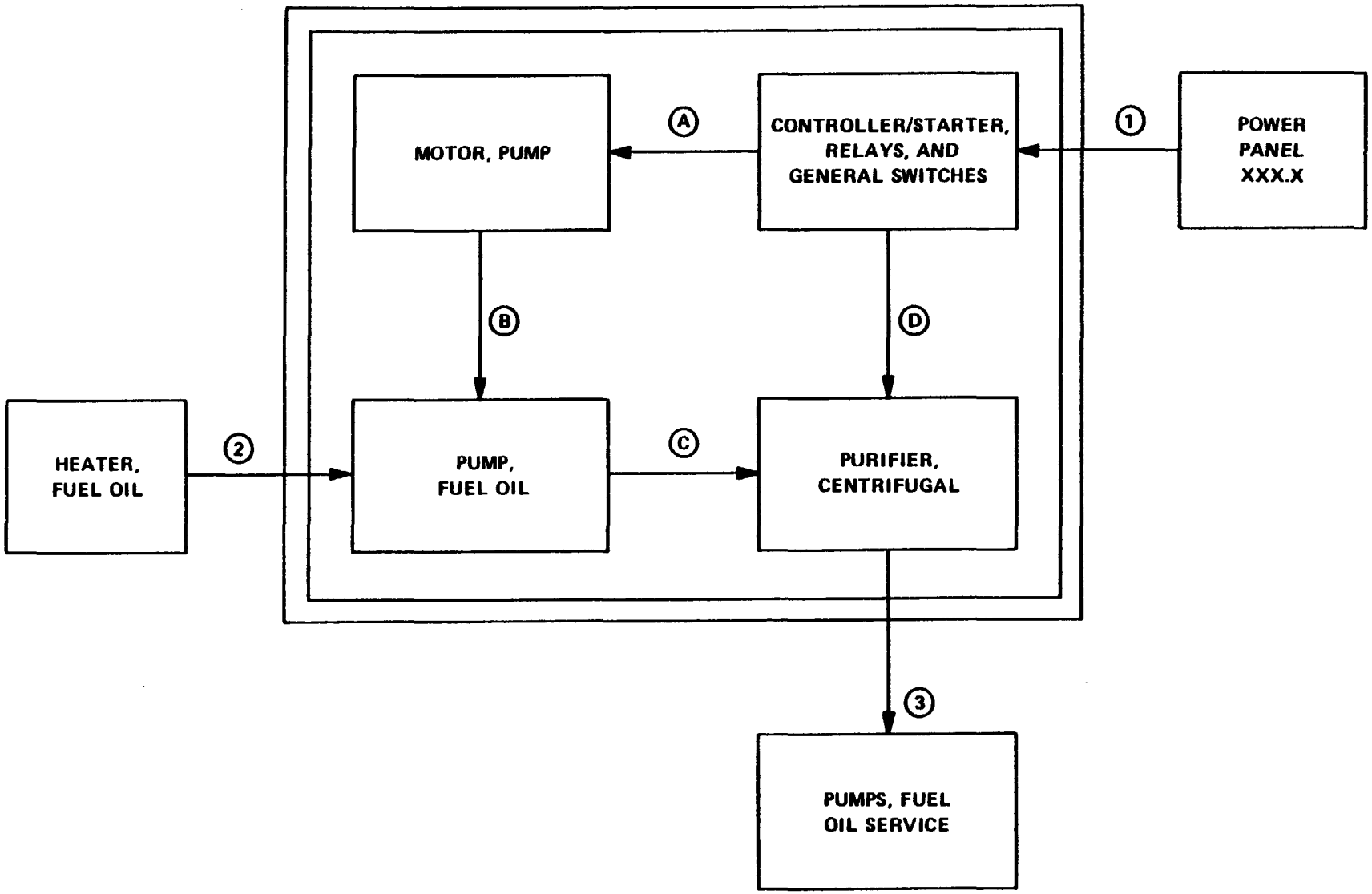

Figure 3. Breakdown Diagram of Fuel Oil Service Purifier Equipment

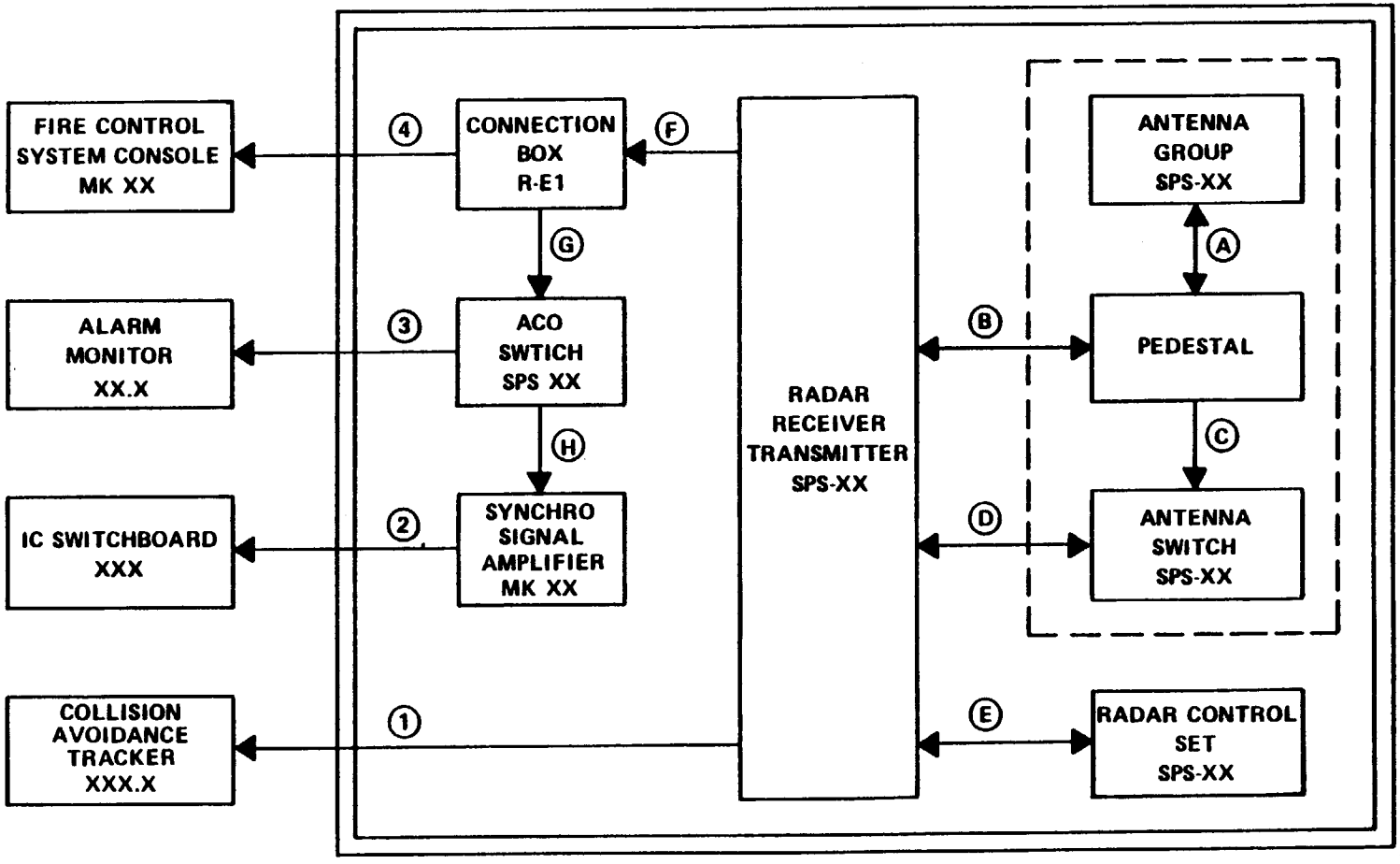

Figure 4. Breakdown Diagram of Surface Search Radar System

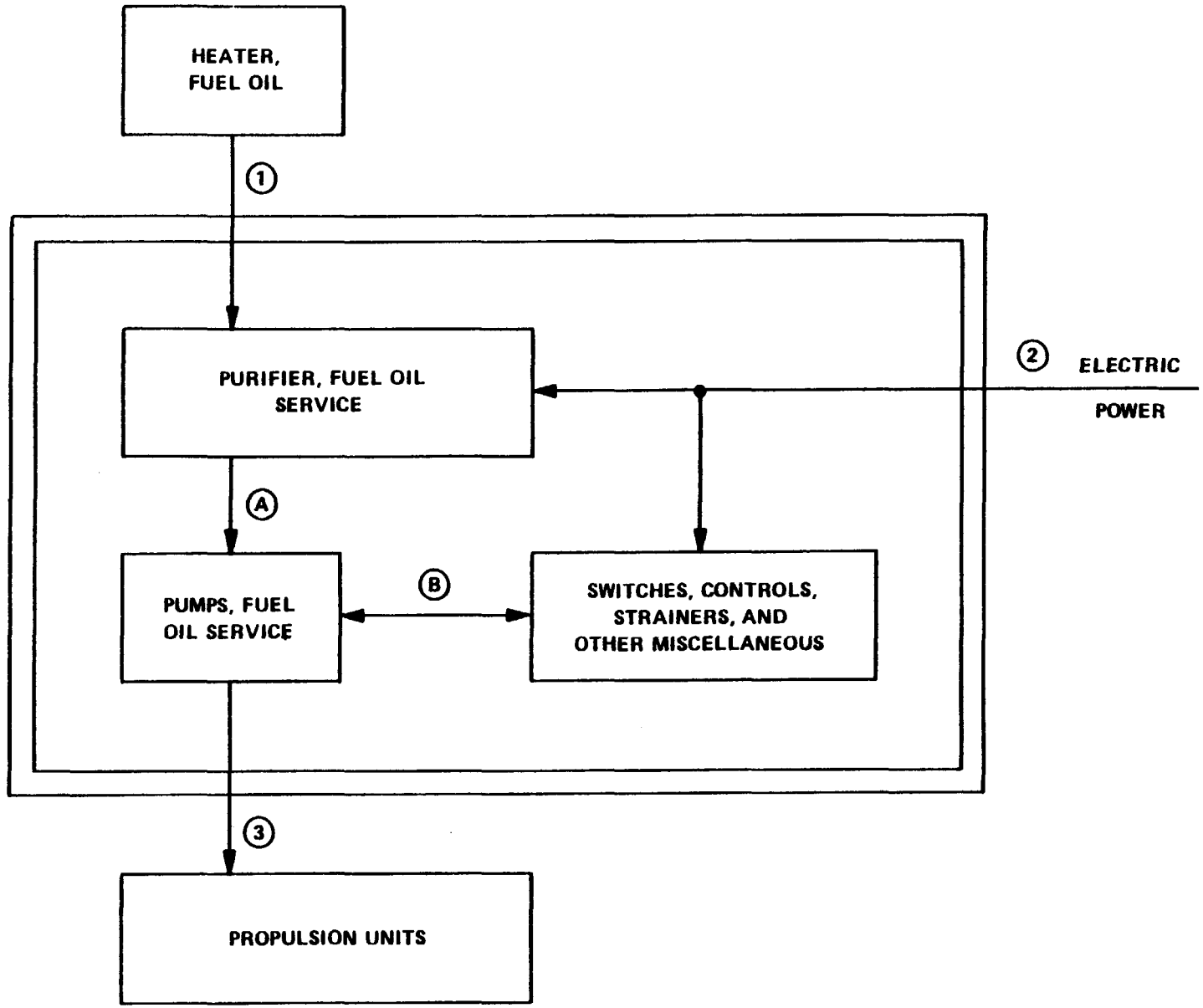

Figure 5. Breakdown Diagram of Fuel Service System

FUNCTIONS OF SURFACE SEARCH RADAR SYSTEM

1. Detect medium and large cross-section surface targets to line-of-site ranges.

2. Detect small targets at close ranges.

3. Provide radar video data to fire control system.

4. Provide radar video data to collision avoidance system.

FIGURE 6. **FUNCTIONAL ANALYSIS RESULTS FOR SURFACE SEARCH RADAR SYSTEM**

FUNCTIONS OF FUEL OIL SERVICE PURIFIER

1. REMOVE WATER FROM FUEL OIL

2. SEPARATE CONTAMINANTS FROM FUEL OIL

3. SUPPLY FUEL OIL TO FUEL OIL SERVICE SYSTEM

4. DISPOSE OF FUEL OIL CONTAMINANTS

FIGURE 7. **FUNCTIONAL ANALYSIS RESULTS FOR FUEL OIL SERVICE PURIFIER EQUIPMENT**

SURFACE SEARCH RADAR SYSTEM CHARACTERISTICS

TRANSMITTER:
- Peak power
- Pulse Width
- PRF
- Pulse rise-time

RECEIVER:
- Sensitivity
- Noise Figure
- Bandwidth

ANTENNA:
- VSWR
- Gain
- Bandwidth
- Side lobe level
- Rotation rate
- Polarization
- Alignment

FIGURE 8. **CHARACTERISTIC ANALYSIS RESULTS FOR SURFACE SEARCH RADAR SYSTEM**

FUEL OIL SERVICE PURIFIER CHARACTERISTICS

1. FUEL FLOW RATE
2. FUEL OUTPUT PURITY LEVEL
3. FUEL INPUT/OUTPUT TEMPERATURE DIFFERENTIAL
4. AUTOMATIC SHUTDOWN IF INPUT FUEL FLOW IS LESS THAN PREDETERMINED RATE
5. START-UP TIME
6. CENTRIFUGAL PURIFIER RPM

FIGURE 9. **CHARACTERISTIC ANALYSIS RESULTS FOR FUEL OIL SERVICE PURIFIER EQUIPMENT**

INTERFACE ANALYSIS
(Refer to DOD-STD-2106(Navy) About This Form)

Form Approved
OMB No. 0704-0188
Exp. Date June 30, 1986

DESCRIPTION OF INTERFACE

FROM:	TYPE OF INTERFACE	TO:	BREAKDOWN DIAGRAM LABEL	PAGE
AN/SPS-55 Radar Reveiver/ Transmitter	Electrical	Collision Avoidance System Tracker	1	1 OF 1

ITEM	INTERFACE LISTING	DEMONSTRATE SATISFACTORY PERFORMANCE?		REQUIRE PREOPERATION CHECK OUT?		POTENTIAL SAFETY IMPLICATIONS?		NECESSARY PREREQUISITE TO OTHER TESTS?		COMMENTS
		YES	NO	YES	NO	YES	NO	YES	NO	
1	Normal Video	X			X		X	X		
2	Trigger		X		X		X		X	
3	S1 Relative Bearing	X			X	X			X	
4	S2 Relative Bearing	X			X	X			X	
5	S3 Relative Bearing	X			X	X			X	
6	115 VAC Phase A		X	X			X	X		
7	115 VAC Phase B		X	X			X	X		
8	115 VAC Phase C		X	X			X	X		
9	6.3 VDC		X		X		X		X	No preoperational check is required if 115VAC is within tolerance
10	28 VDC		X		X		X		X	Same as above
11	-28VDC		X		X		X		X	Same as above

NAVSEA 3900/1(4-85) S/N 0116-LF-039-9010

Figure 10. Completed Interface Analysis Form for Surface Search Radar System

INTERFACE ANALYSIS
(Refer to DOD-STD-2106(Navy) About This Form)

Form Approved
OMB No. 0704-0188
Exp Date June 30, 1986

DESCRIPTION OF INTERFACE

FROM:	TYPE OF INTERFACE	TO:	BREAKDOWN DIAGRAM LABEL	PAGE
Heater, Fuel Oil	Liquid	Pump, Fuel Oil	2	1 OF 1

ITEM	INTERFACE LISTING	DEMONSTRATE SATISFACTORY PERFORMANCE?		REQUIRE PREOPERATION CHECK OUT?		POTENTIAL SAFETY IMPLICATIONS?		NECESSARY PREREQUISITE TO OTHER TESTS?		COMMENTS
		YES	NO	YES	NO	YES	NO	YES	NO	
1	Heated Fuel Oil		X	X			X	X		

NAVSEA 3090/1 (4-85) S/N 0116-LF-039-9010

Figure 11. Completed Interface Analysis Form for Fuel Oil Service Purifier

VERIFICATION ANALYSIS
(Refer to DOD-STD-2106(Navy) About This Form)

Form Approved
OMB No 0704-0188
Exp Date June 30, 1986

TITLE OF TEST PROCEDURE: AN/SPS-XX Surface Search Radar System		TEST PROCEDURE NO./REV.: 4A450B395 Rev A	PAGE 1 OF 2
NAME OF VERIFIER: T. Jefferson	ORGANIZATION NAME AND CODE: Defense Systems, Inc	DATE VERIFIED: 15 Nov 1981	TIME: BEGAN 0915 1330; ENDED 1000 1400; ELAPSED 2.25 hr; EST. TIME (T.P.) 2.0 hr

SECTION I - TESTING STEPS

LIST ANY PROBLEMS AND/OR POTENTIAL IMPROVEMENTS BELOW
(Consider the following: Is the step safe? Is it necessary? Is it practical to perform? Is it in the proper sequence?)

STEP NUMBER	PROBLEM	RECOMMENDED CHANGE
32 to 40	Potential hazard due to requirement to make the measurement in the vicinity of high voltage	Add a caution prior to step 32
71 to 85	Steps 71 thru 80 are the same as 51 thru 60	Rearrange the testing steps so that the measurements required in steps 81 thru 85 can be performed immediately following step 65. Eliminate steps 71 thru 80.
94	Power switch must be in the radiate position to measure the power amplifier output	Add a step prior to step 94 to place the POWER SWITCH in the RADIATE position

NAVSEA 3990/3 (4-83) S/N 0116-LF-039-9005

(Continued on back)

Figure 12. Completed Verification Form for Surface Search Radar System Test (sheet 1 of 2)

VERIFICATION ANALYSIS - CONTINUATION
(Refer to DOD-STD-2106(Navy) About This Form)

Form Approved
OMB No 0704-0188
Exp Date June 30, 1986

SECTION II - TEST DATA DISCREPANCIES

STEP NUMBER	TEST ELEMENT	EXPECTED RESULTS	ACTUAL RESULTS	COMMENTS
42	Predriver			
	Pulse Width	>70 μsec	68 μsec	
88	LPA Driver			
	Power Output	>90 mw		LPA Driver has ORDALT 7345 installed

SECTION III - SUPPORT
(Does the test procedure list the correct number and type?)

TEST EQUIPMENT	COMPUTER PROGRAMS	PERSONNEL
☑ YES ☐ NO DISCREPANCY	☑ YES ☐ NO DISCREPANCY	☑ YES ☐ NO DISCREPANCY

NAVSEA 3980/2 (4-85) (BACK)

Figure 12. Completed Verification Form for Surface Search Radar System Test (sheet 2 of 2)

VERIFICATION ANALYSIS
(Refer to DOD-STD-2106(Navy) About This Form)

Form Approved
OMB No 0704-0188
Exp Date June 30, 1986

TITLE OF TEST PROCEDURE	TEST PROCEDURE NO./REV.	PAGE
FUEL OIL SERVICE PURIFIER	3B261C301	1 OF 2

NAME OF VERIFIER	ORGANIZATION NAME AND CODE	DATE VERIFIED	TIME: BEGAN	ENDED	ELAPSED	EST. TIME (T.P.)
A. Johnson	XYZ Manufacturing	15Nov82	1015	1121	1.1 hr	1.0hr

SECTION I - TESTING STEPS

LIST ANY PROBLEMS AND/OR POTENTIAL IMPROVEMENTS BELOW
(Consider the following: Is the step safe? Is it necessary? Is it practical to perform? Is it in the proper sequence?)

STEP NUMBER	PROBLEM	RECOMMENDED CHANGE
23/26	Steps 23 thru 26 require 2 persons to perform	Increase the number of personnel required from 1 to 2
37	This step is not required	Eliminate the entire step
42/46		Steps 42 thru 46 could be performed more efficiently and conveniently while steps 31 thru 35 are being performed

NAVSEA 3990/2 (4-85) S/N 0116-LF-039-0005

(Continued on back)

Figure 13. Completed Verification Form for Fuel Oil Service Purifier Test (sheet 1 of 2)

VERIFICATION ANALYSIS - CONTINUATION
(Refer to DOD-STD-2106(Navy) About This Form)

Form Approved
OMB No. 0704-0188
Exp. Date June 30, 1986

SECTION II - TEST DATA DISCREPANCIES

STEP NUMBER	TEST ELEMENT	EXPECTED RESULTS	ACTUAL RESULTS	COMMENTS
34	Fuel Oil Temp	Indicator	Indicator	Indicator light illuminated in step 27
	Indicator	will light	already lit	and never extinguishes

SECTION III - SUPPORT
(Does the test procedure list the correct number and type?)

TEST EQUIPMENT	COMPUTER PROGRAMS	PERSONNEL
☑ YES ☐ NO DISCREPANCY	☑ YES ☐ NO DISCREPANCY	☐ YES ☑ NO DISCREPANCY 1 Additional person is required to perform steps 23 thru 26

NAVSEA 3990/2 (4-85) (BACK)

Figure 13. Completed Verification Form for Fuel Oil Service Purifier Test (sheet 2 of 2)

THIS PAGE INTENTIONALLY BLANK

APPENDIX A

TEST STAGE DEFINITIONS

10. GENERAL

10.1 **Scope.** This Appendix defines the seven stages of industrial testing and provides examples for stages 2 through 7.

10.2 **Application.** These test stage definitions apply to all testing of shipboard equipment and systems performed in a shipyard or at sea during industrial periods.

20. DETAILED REQUIREMENTS

20.1 **Test Stages.** Industrial testing is accomplished in seven stages as defined in the following paragraphs.

20.1.1 **Stage 1. Material Receipt Inspection and Shop Tests.** Stage 1 includes those tests and inspections that provide for inventory management and physical inspection of new material, equipment and systems, and associated documentation. These tests and inspections are intended to ensure receipt of equipment in good physical condition by the shipbuilder or other industrial organization. Stage 1 documentation is not normally in the form of a test procedure.

Stage 1 further includes those tests and inspections conducted prior to shipboard installation for new or repaired equipment and systems. In instances where equipment and systems are repaired aboard ship, shop test procedures may be used to validate readiness for shipboard testing. For work planning and cost accounting purposes, stage 1 is not a part of the test program and will normally be a part of the industrial organization's quality assurance program.

20.1.2 **Stage 2. Shipboard Installation Inspections and Tests.** Stage 2 tests and inspections conducted prior to operation of installed or relocated equipment, cabling, waveguide, piping, ventilation, etc., to ensure that each installation has been accomplished in accordance with established plans and specifications. The shipbuilder or industrial organization is normally responsible for the preparation of stage 2 test procedures.

20.1.3 **Stage 3. Equipment Tests.** Stage 3 tests demonstrate that after shipboard installation, the individual equipment performs within the established limits and tolerances. These equipment operability tests are conducted independent of the system (i.e., the equipment may be isolated from the system) and can be conducted prior to complete system installation.

20.1.4 **Stage 4. Intrasystem Tests.** Stage 4 tests demonstrate that equipment and required functions, entirely within one independent system, perform within established limits and tolerances. Stage 4 testing normally consists of intrasystem functions, signals, and commands within a single independent system of the combat system or ship system. Stage 4 includes all tests involving 2 or more items of equipment which do not involve more than one independent system of the combat system or ship system. Stage 4 tests may include tests between two or more items of equipment and between two groups of equipment within the same system.

20.1.5 **Stage 5. Intersystem Tests.** Stage 5 tests involve two or more independent systems within the combat system, ship system, or between the combat system and the ship system. These tests demonstrate that two or more independent systems perform a specific function or functions within established standards. The exchange of intersystem signals, commands, functions and all associated computer interfaces are included.

20.1.6 **Stage 6. Special Tests.** Stage 6 tests require special simulation facilities or resources external to the immediate test organization, but are conducted as part of the dockside work package for the industrial effort. Special tests can apply to one or more items of equipment, a single system, or a number of systems, and may require total ship operability. Stage 6 tests that can only be performed at-sea should be designated as stage 7. Normally, there will be very few stage 6 tests in an industrial test program.

20.1.7 **Stage 7. Trials Tests.** Stage 7 tests must be conducted during sea trials; e.g., Builders Trials (BT), Acceptance Trials (AT), Underway Trials (UT), and Post-Repair Trials (PRT). Test procedures are not identified with a stage 7 number unless the test can only be conducted entirely or partially at sea.

20.2 **Test stage examples.** Table A-1 provides examples of test procedures for stages 2 through stage 7 of an industrial test program. No examples have been provided for stage 1 since these procedures are not normally included in the industrial test program. In this table, examples are presented by system to demonstrate typical tests that may be performed at each stage on a particular system. As can be seen from table A-1 that many systems do not require testing at every stage.

TABLE A1 TEST STAGE EXAMPLES

SYSTEM	STAGE 2 INSTALLATION	STAGE 3 EQUIPMENT LEVEL	STAGE 4 INTRASYSTEM LEVEL	STAGE 5 INTERSYSTEM LEVEL	STAGE 6 SPECIAL	STAGE 7 TRIALS
HARPOON WEAPON SYSTEM	Verification of Launcher Foundation Machining HARPOON Weapon System Initial Inspection & Test	HARPOON Weapon Control Console Functions HARPOON Weapon System Power Checks	HARPOON Weapon System Operability Test (in Launcher Simulation Mode)	HARPOON Weapon System/MK 92 Intersystem Test HARPOON Interface Test (HIT)		HARPOON Weapon System Test (BT/AT)
MK 76 GUIDED MISSILE FIRE CONTROL SYSTEM	AN/SPG-55B Waveguide Low Power Test MK 76 GMFCS Initial Inspection and Test/Insulation Resistance and Continuity Test	AN/SPG-55B Log Receiver Gain Alignment MK 152 Digital Computer Diagnostic Test MK 75 Signal Data Converter Initial Light Off Test	AN/SPG-55B Radar Inter-Director Power Sharing Test MK 76 GMFCS Program Introduction MK 75 Signal Data Converter Peripheral Interface Test	Radar AN/SPG-55B and SPS-10 RFJ Suppression Test WDS/DFCS Intercomputer POFA Radar AN/SPG-55B and FCS MK 92 Intersystem Test	AN/SPG-55B Shore Tower Correlation Test	Fire Control System Operational Test (Live Tracking Exercise)
NAVIGATION SYSTEM	EM Log Insulation Resistance & Continuity Test Gyrocompass Insulation Resistance & Continuity Test	EM Log Static Test Gyrocompass Functional Test	Gyro Alignment & Heading Verification Test	EM Log Interface Test Gyrocompass Interface Test		EM Log Underway Calibration Test Gyrocompass Operational Test

TABLE A1 TEST STAGE EXAMPLES (Continued)

SYSTEM	STAGE 2 INSTALLATION	STAGE 3 EQUIPMENT LEVEL	STAGE 4 INTRASYSTEM LEVEL	STAGE 5 INTERSYSTEM LEVEL	STAGE 6 SPECIAL	STAGE 7 TRIALS
AIMS MK XII IFF		AN/UPA-59 Decoder Group Functional Test	AIMS MK XII IFF Intrasystem Test	AIMS MK XII/FCS Intersystem Test	AIMS MK XII System Operability	AIMS MK XII SYS/FCS At-Sea Operational Test
		AN/UPX-27 Interrogator Set Functional Test				
PROPULSION PLANT	Propulsion Gas Turbine Installation, Inspection and Test (IT&T)	Propulsion Gas Turbine Lube-Oil System Calibration Test	Propulsion Gas Turbine START-RUN Demo	Propulsion Plant START-RUN Demo	Engine Removal and Replacement Demo	Propulsion Plant Trial
	Propulsion Control IT&T	Propulsion Control Console and Local Operating Panel Calibration Test	Controlled Pitch Propeller Waterborne Test			
ELECTRIC PLANT	Electric Plant Control IT&T	Electric Plant Control Console Calibration Test	Electric Plant Control Functional Test			1. Electric Plant Test
	Ship's Service Diesel Generator Sets IT&T		Diesel Generator Set Operational Test			
FRESH WATER SYSTEM	Fresh Water Service Hydrostatic Test	Bromine Disinfection Test	Fresh Water Service System Operational Test			

APPENDIX B

TEST OUTLINE AND TEST PROCEDURE FORMAT AND CONTENT

10. **GENERAL**

10.1 **Scope.** This Appendix establishes a uniform format for test outlines and test procedures and it describes information to be developed and provided.

10.2 **Application.** This Appendix is mandatory for test outline and test procedure preparation as described in paragraphs 5.2.7 and 5.2.9 of DOD-STD-2106(Navy).

10.3 **Warnings, cautions, and notes.** Warnings, cautions, and notes shall be used as adjuncts to the text and are defined as follows:

WARNING: A warning is a statement used to call attention to possible personnel injury or loss of human life if the safety precaution is not observed. Warnings shall be listed immediately preceding the instructions in the test procedure.

CAUTION: A caution is a statement used to call attention to possible equipment damage. Cautions shall be listed immediately preceding the instructions in the test procedure.

NOTE: A note is a description of an unusual procedure or condition which must be brought to the operator's attention. Notes shall also be used to supply needed additional information. These shall not be steps in the test procedure. Notes may precede or follow the test procedure instruction.

20. **REFERENCED DOCUMENTS.**
Refer to section 2 of DOD-STD-2106(Navy).

30. **REQUIREMENTS FOR TEST OUTLINES**

30.1 **Test Outlines.** Each test outline shall contain a COVER SHEET, REVISION RECORD, LIST OF EFFECTIVE PAGES, and TEST OUTLINE sheets. The test outline shall become the front matter for the associated test procedure. Figures B-1 through B-4 provide the format and content instructions for preparation of test outlines. Technical content shall be developed in accordance with the engineering process described by paragraph 5.2 of DOD-STD-2106 (Navy). Each of the following sections of the test outline shall begin on a separate page:

COVER SHEET

REVISION RECORD

TEST OUTLINE

TEST TITLE: TEST NO:

REV/CHG:

COVER SHEET

The test document preparer shall provide a cover sheet to include the indicated information.

It is expected that the test organization will add a cover sheet appropriate for the industrial test program in which the test procedure is utilized.

Prepared by: _____ **Date:** _____
Organization and Code

Reviewed by: _____ **Date:** _____
Organization and Code

Approved by: _____ **Date:** _____
Organization and Code

Figure B-1. **COVER SHEET** (Format and Content)

TEST TITLE: TEST NO:

REV/CHG:

REVISION RECORD

REV/CHG	DESCRIPTION	Approval INITIAL	DATE

Figure B-2. **REVISION RECORD** (Format and Content)

LIST OF EFFECTIVE PAGES

PG-REV	PG-REV	PG-REV	PG-REV	PG-REV	PG-REV	PG-REV

Starting at top left, insert the page number, dash, revision/change. Fill each column left to right. Nothing will follow the dash for the original page. Include extra sheets as required.

Figure B-3. **LIST OF EFFECTIVE PAGES** (Format and Content)

TEST TITLE: TEST NO:

TEST OUTLINE

1. **OBJECTIVE.** Briefly describe the test objective relative to capabilities and/or interfaces to be tested.

2. **ESTIMATED TESTING TIME.** Enter the estimated elasped (clock) time in hours required to perform the test once, assuming no interruptions. Include the time required to complete the INITIAL CONDITIONS AND SETUP and SHUTDOWN AND SECURING steps.

3. **REFERENCES.** List the identifying number and title of reference sources used as a primary basis for preparation of the test outline and procedure. References to ship drawings should be general rather than specific to a hull.

4. **TEST OR SUPPORT EQUIPMENT AND MATERIAL:**

GENERIC NAME	QUANTITY	IDENTIFYING INFORMATION

List all portable, noninstalled test or support equipment and material including special tools, handling equipment, measurement devices, shapes, etc., required to conduct the test. Common tools should not be listed. Standard ship-board test equipment as defined in MIL-STD 1364 should be used wherever possible.

List electrical and electronic test equipment by generic name and list the subcategory (SCAT) code under IDENTIFYING INFORMATION. If test equipment does not have SCAT code, list the manufacturer and model number, drawing number, or other identifying information. For nonelectrical and electronic test equipment, list by generic name and provide salient characteristic in IDENTIFYING INFORMATION column or manufacturer's part number and Federal Supply Code for Manufacturer (FSCM) as listed in Cataloging Handbook H4. Special Tools and materials will be identified by name, manufacturer's part number, and FSCM.

5. **COMPUTER PROGRAMS REQUIRED.** List all computer programs required in the conduct of the test and identify all test data tapes. The level of detail to which computer programs are specified will vary depending on requirements. In some cases the version number, installed patches, and date may be required. In all cases, the title and source of computer programs shall be specified.

6. **PREREQUISITES.** List by title the immediate prerequisite test(s) that must be completed prior to the conduct of this test. Do not require a complete test if only a portion of that test is required. In such cases, prerequisite functions should be listed.

Figure B-4. **TEST OUTLINE SHEET** (Format and Content sheet 1 of 2)

TEST TITLE: TEST NO:

REV/CHG:

TEST OUTLINE

7. **SPECIAL CONDITIONS AND SERVICES.** Identify any special or unique support services, facilities, or conditions required for test conduct; e.g., air, water, electrical services, drydock, and support ships or aircraft. Include detailed requirements for services.

8. **EQUIPMENT INVOLVED IN TEST.** List all shipboard installed equipment involved in the test. When a complete system is involved, the system is listed and not the individual components; e.g., MK 86 MOD 5 Gun Fire Control System. When more than one type of equipment may be used, identify alternatives and use generic name in TESTING STEPS. For example, if gyro heading is obtained from an AN/WSN-2 Stabilized Gyrocompass on one ship and from the AN/WSN-5 Initial Navigation System on another ship, both alternatives should be listed and testing steps should refer to "Gyro Heading" rather than "WSN-2 Output."

9. **CONFIGURATION.** List SHIPALT, ORDALT, and Field Change status or APL number(s) of the equipment or system to which the test applies.

10. **METHOD.** Explain briefly in narrative form the scope of the test and generally how the test is to be performed. Include functions tested, modes of operation of major equipment, intended use of test equipment, special support services, and facilities. Avoid redundancy with the test objective paragraph.

    The test method narrative should be brief and not contain references to other documents such as ODs, OPs, and technical manuals. The method may be divided into subtests for convenience and clarity.

11. **STATION ASSIGNMENTS:**

STATION	NO. PERSONNEL	COMMENTS

List all stations by the component name that must be manned to perform the test. Indicate the number of personnel including the test conductor, and each technical discipline (e.g., electrician, pipefitter, electronic technician) required at each station. Station assignments should provide an indication of the total number of personnel required to conduct the test; therefore, if one person can reasonably man more than one station, this should be clearly indicated.

Figure B-4. **TEST OUTLINE SHEET** (Format and Content sheet 2 of 2)

30.2 **Test Procedures.** The first 11 paragraphs of the test procedure are the test outline. The test outline is followed by SAFETY INSTRUCTIONS, INITIAL CONDITIONS AND SETUP, TESTING STEPS, SHUTDOWN AND SECURING, TEST DATA RECORDING, TEST EQUIPMENT USED, and COMMENTS sections.

40. REQUIREMENTS FOR TEST PROCEDURES

40.1 **Test procedures.** The first eleven paragraphs of the test procedure will be the test outline depicted by figure B-4. The body of each test procedure shall consist of SAFETY INSTRUCTIONS, INITIAL CONDITIONS AND SETUP, TESTING STEPS, SHUTDOWN AND SECURING, TEST DATA RECORDING, TEST EQUIPMENT USED, and COMMENTS sections. Figures B-5 through B-11 provide the format and content instructions for preparation of test procedures. Technical content shall be developed in accordance with the engineering process described by paragraph 5.2 of DOD-STD-2106 (Navy).

40.1.1 **Pagination.** Each of the following sections of the test outline and test procedure shall begin on a separate page.

SAFETY INSTRUCTIONS

INITIAL CONDITION AND SETUP

TESTING STEPS

SHUTDOWN AND SECURING

TEST DATA RECORDING

TEST EQUIPMENT USED

COMMENTS

40.1.2 **Header and trailers.** Each page of the test procedure shall have a header for entry of the TEST TITLE, TEST NO., and REV/CH. In addition, the TEST DATA RECORDING, TEST EQUIPMENT USED, and COMMENT pages shall have trailers at the bottom of each page for entry of the SHIP HULL NO., TEST CONDUCTOR SIGNATURE, GOVERNMENT WITNESS SIGNATURE, and DATE.

40.2 **Short procedures.** Exceptions to pagination requirements are permitted for test procedures with testing steps of three pages or less. For such procedures only, the following sections must begin on a separate page:

COVER SHEET

TEST OUTLINE

SAFETY INSTRUCTIONS

TEST DATA RECORDING

TEST TITLE: TEST NO:

REV/CHG:

SAFETY INSTRUCTIONS

Describe the safety factors that will impact test implementation and requirements that must be met prior to and during test conduct. Instructions will include safeguards necessary to prevent injury to test personnel and observers, and damage to the equipment under test. Examples are special rigging, rubber matting, equipment, procedures, and warnings to be posted. Generally, do not list manuals or instructions which document standard or local safety precautions. Avoid such general statements as: "Observe all safety precautions in accordance with OPNAVINST 5100.19."

Figure B-5. **TEST PROCEDURE SAFETY INSTRUCTION SHEET** (Format and Content)

INITIAL CONDITIONS AND SETUP

STEP	STATION	INSTRUCTION

List all details and instructions necessary to bring all involved test equipment, equipment under test, auxiliary material, and test personnel to a readiness level for satisfactory test performance. Steps shall be numbered consecutively starting with 1. Steps that require gathering or recording of data shall appear in the INITIAL CONDITION AND SETUP instructions. The steps included shall call out required ship auxiliary equipment in preparation for test performance; determination that required personnel and equipment safety actions have been achieved; and other items as required. All setup instructions shall provide, in clear detail, the connections to be made between equipment, equipment interfaces, test equipment, etc. Tables may be included as necessary. Circuit and block diagrams may be used as necessary to aid understanding and implementing the test setup. Instructions shall not refer to steps, paragraphs, or sections of technical manuals or other publications. Include extra sheets as required.

Figure B-6. **INITIAL CONDITIONS AND SETUP SHEET** (Format and Content)

TEST TITLE: TEST NO:

REV/CHG:

TESTING STEPS

STEP	STATION	INSTRUCTIONS

This section provides complete and detailed instructions for conducting the test including necessary, warnings, cautions, notes, explanations, and diagrams. Steps shall be consecutively numbered starting with step 1. The instructions shall delineate each step-by-step test action to be performed and all data to be recorded. When data is to be recorded, testing steps shall so indicate. Lengthy procedures involving many test steps should be divided into subtests to facilitate test conduct. For example, divide a radio receiver test into subtests for AGC operation, sensitivity, frequency stability, and bandwidth. Such division may be accomplished by inserting titles and/or explanatory material at appropriate places in the sequence of testing steps. The instructions written shall be self-contained and shall not refer to steps, paragraphs, or sections of technical manuals or other publications for conduct of the test. Recording of test data shall be entirely on the TEST DATA RECORDING sheets and not on the TESTING STEPS sheets.

Where test steps require recording of data on strip charts oscillographs, computer printouts, polar charts, photographs etc., the test steps shall provide a clear identification of the type of data to be collected, the scales to be used, and the results required. Where post-test data analysis methods, computer programs, and equations are required, they shall be provided as an attachment to the test procedure. Equations or analysis methods which are required shall be provided as a part of this procedure and the source of any required data analysis computer programs shall be identified. It is intended that preventive or corrective maintenance be performed prior to test conduct and that actual test conduct demonstrate that the installed equipment or systems are capable of meeting the intended performance requirements.

In tests where only one station is involved columnar format is not required; however, each procedural step shall be numbered. Include extra sheets as required.

Figure B-7. **TESTING STEPS SHEET** (Format and Content)

TEST TITLE: TEST NO:

REV/CHG:

SHUTDOWN AND SECURING

STEP	STATION	INSTRUCTIONS

Provide all of the necessary information to turn off equipment, disconnect test equipment and services, rewind test tapes, assemble test results data, and restore the equipment or subsystem to pretest conditions. The steps should be consecutively numbered starting with step 1. Steps shall not appear in the shutdown instructions that require the gathering or recording of data. Include extra sheets as required. In general, instructions shall not refer to steps, paragraphs, or sections of technical manuals or other publications. Avoid generalized statements such as "Return equipment to normal operation condition."

Figure B-8. **SHUTDOWN AND SECURING SHEET** (Format and Content)

TEST TITLE: TEST NO:

REV/CHG:

TEST DATA RECORDING

EQUIPMENT/SYSTEM IDENTIFICATION/SERIAL NO._____

PREREQUISITES

List all applicable prerequisites and provide signature blocks. If there are no prerequisites, so state.

TEST DATA RECORDING

STEP	TEST ELEMENT	EXPECTED RESULTS	ACTUAL RESULTS

Data recording sheets shall provide adequate space for manual recording of significant meter readings, dial readings, and other relevant observations with a clear statement of expected results and applicable tolerances. Avoid recording to such detail that data sheet becomes a step checkoff sheet. The number in the STEP column shall be the procedure step that requires the recording of this data. The TEST ELEMENT column describes the data being recorded. Include extra data sheets as necessary. Each additional sheet shall include the TEST TITLE, TEST NO., REV/CHG, Test Data Recording column headings, SHIP HULL NO., TEST CONDUCTOR SIGNATURE, GOVERNMENT WITNESS SIGNATURE, and DATE.

SHIP HULL NO.	TEST CONDUCTOR SIGNATURE	GOVERNMENT WITNESS SIGNATURE	DATE

Figure B-9. **DATA RECORDING SHEET** (Format and Content)

TEST TITLE: TEST NO:

REV/CHG:

TEST EQUIPMENT USED

INCLUDE THE FOLLOWING DIRECTION TO THE TEST CONDUCTOR ON THIS PAGE:

"List all test equipment utilized in the test including all general and specialized test equipment, special test cables, attenuators, and any other materials requiring calibration. Include extra sheets as necessary to identify all test equipment."

GENERIC NAME	MODEL	SERIAL NO.	CALIBRATION DUE DATE	REMARKS

SHIP HULL NO.	TEST CONDUCTOR SIGNATURE	GOVERNMENT WITNESS SIGNATURE	DATE

Figure B-10. **TEST EQUIPMENT USED SHEET** (Format and Content)

TEST TITLE: TEST NO:

REV/CHG:

COMMENTS

The following directions will be provided near the top of the comment sheet.

"This sheet is provided for the test conductor or Government witness to make appropriate comments including the following:

a. Visual observations of dynamic responses;
b. Erratic or unusual equipment behavior;
c. Operational or handling difficulties;.
d. Procedural corrections;.
e. Equipment malfunctions;
f. Discrepancies noted during test conduct; and,
g. Waivers including reference to authorization document, i.e., letter, message, etc.

Indicate if a Test Problem Report (TPR) was generated with respect to these or other problems."

SHIP HULL NO.	TEST CONDUCTOR SIGNATURE	GOVERNMENT WITNESS SIGNATURE	DATE

Figure B-11. **COMMENT SHEET** (Format and Content)

APPENDIX C

ABBREVIATIONS AND ACRONYMS

APL	Allowance Parts List
AT	Acceptance Trials
BT	Builders Trials
CDRL	Contract Data Requirements List, DD Form 1423
CH	Change
CIC	Combat Information Center
COMM	Communications
DAR	Defense Acquisition Regulation
DID	Data Item Description, DD Form 1664
DoDISS	Department of Defense Index of Specifications and Standards
FAR	Federal Acquisition Regulation
FSCM	Federal Supply Code for Manufacturer
GPO	Government Printing Office
Hz	Hertz
MIL	Military
MTS	Missile Test Set
NO	Number
OD	Ordnance Document
OP	Ordnance Publication
ORDALT	Ordnance Alteration
PRT	Post-Repair Trials
REV	Revision
SHIPALT	Ship Alteration
UT	Underway Trials
VDC	Volts Direct Current
WDS	Weapon Designation System

APPENDIX D

ORDERING DATA

10. **GENERAL**

10.1 **Scope.** This Appendix defines the ordering data that should be included in acquisition documents that invoke DOD-STD-2106(Navy). Guidance for tailoring the Standard to the individual needs of specific programs is also provided.

20. **REFERENCED DOCUMENTS**
Not Applicable.

30. **DEFINITIONS**
Not Applicable.

40. **GENERAL REQUIREMENTS**
Not Applicable.

50. **DETAIL REQUIREMENTS**

50.1 **Acquisition requirements.** The contract or order should specify all information required, but not included, in this standard. Allowed exceptions to and deviations from the standard, and choices of method and format when allowed by this standard. The following information should be provided.

a. Title, number, and date of this Standard.

b. Identification of the specific equipment or system and the stage(s) for the test outlines and test procedures which are to be prepared.

c. Security classification of the material to be used in test outlines and test procedures development (paragraph 4.2).

d. Type style (paragraph 4.3.9).

e. Schedules and identification of applicable tasks described in the Standard. These include:

(1) Equipment/system definition (paragraph 5.2.1)

(2) Test element identification (paragraph 5.2.2)

(3) Test element selection (paragraph 5.2.3)

(4) Test stage determination (paragraph 5.2.4)

(5) Redundancy analysis (paragraph 5.2.5)

(6) Test element grouping (paragraph 5.2.6)

(7) Test outline preparation (paragraph 5.2.7)

(8) Test outline submittal (paragraph 5.2.8)

(9) Test procedure development (paragraph 5.2.9)

(10) Initial test procedure submittal (paragraph 5.2.10)

(11) Test procedure verification (paragraph 5.2.11)

(12) Final test procedure development (paragraph 5.2.12)

(13) Final test procedure submittal (paragraph 5.2.12.2)

(14) Final documentation submittal (paragraph 5.3)

(15) Shipment of deliverables (paragraph 5.4 and 5.5)

f. Identification and address of acquisition manager or his designated agent for the review of test documentation.

g. Quality assurance provisions.

h. Requirements for in-process review support.

50.2 Data requirements. When this standard is used in an acquisition which incorporates a DD Form 1423, Contract Data Requirements List (CDRL), the data requirements identified below shall be developed as specified by an approved Data Item Description (DD Form 1664) and delivered in accordance with the approved CDRL incorporated into the contract. When the provisions of the DoD FAR Supplement, Part 27, Sub-Part 27.410.6 (DD Form 1423) are invoked and the DD Form 1423 is not used, the data specified below shall be delivered by the contractor in accordance with the contract or purchase order requirements. Deliverable data required by this standard are cited in the following paragraphs.

Paragraph	Data requirement title	Applicable DID number
5.2.1	Breakdown Diagram	DI-QCIC-80202
5.2.2.3	Interface Analysis Record	DI-QCIC-80203
5.2.4.2	Test Elements List (other test stages)	DI-QCIC-80204
5.2.6	Test Elements List (Nonredundant)	DI-QCIC-80204
5.2.8	Ship Test Outline	DI-QCIC-80205

Paragraph	Data requirement title	Applicable DID number
5.2.10 and 5.2.12.2	Shipboard Industrial Test Procedure	DI-QCIC-80206
5.2.11.2	Verification Analysis Record	DI-QCIC-80207

(Data Item Descriptions (DIDs) related to this standard and identified in Appendix D will be approved and listed as such in DoD 5010.12-L, Vol. I, AMSDL. Copies of the Data Item Descriptions required by contractors in connection with specific acquisition functions should be obtained from the Naval Publications and Forms Center, 5801 Tabor Avenue, Philadelphia, PA 19120 or as directed by the contracting officer.)

50.3 Subject term (key word) listing.

Analysis
Combat system
Contractor
Construction
Data items
Design
Development
Engineering
Equipment
Formats
Industrial test procedures
Inspection
Interfaces
Modification
Preparation of test procedures
Procedures
Process
Production
Quality assurance
Requirements
Shipboard
Shipyard
Ship system
Systems
Tests
Test elements
Test outline
Test procedure
Test stages
Verification

APPENDIX E

TAILORING INSTRUCTIONS

10. **GENERAL**

10.1 **Scope.** This Appendix provides guidelines for tailoring the test procedure development process to meet the needs of individual test programs.

10.2 **Applicability.** There are circumstances in which the engineering process is inappropriate for development of test procedures as outlined in section 5 of DOD-STD-2106(Navy). In such cases the requirements of the Standard may be tailored to conform to program constraints or to take advantage of economies afforded by previous development efforts.

20. **REFERENCED DOCUMENTS**
Not applicable

30. **DEFINITIONS**
Not applicable

40. **GENERAL REQUIREMENTS**
Not applicable

50. **DETAIL REQUIREMENTS**

50.1 **Tailoring philosophy.** The requirements of DOD-STD-2106(Navy) may be tailored to meet the needs of individual programs. However, any tailoring of the Standard must be done in a way that will preserve the integrity of the development process. The development process prescribed by the Standard has two objectives:

a. To develop test procedures that as written can be performed in a shipboard environment, and where any deviation of actual results from expected results can be attributed to equipment deficiencies.

b. To develop test outlines and test procedures that completely and adequately demonstrate the material readiness of the equipment or systems tested.

Failure to verify the first objective becomes readily apparent during industrial testing and is reflected in the number of test problem reports and test change proposals submitted. Failure to meet the second objective results in the deployment of ships in an unknown and often inadequate state of readiness. The latter shortcomings are the more serious of the two and are the more difficult to detect and correct. Consequently, it

is imperative that test procedure completeness and adequacy be built into the development process. Therefore, any efforts to tailor the Standard must ensure that the procedures generated are both practical to perform and adequate to completely evaluate the equipment or system being tested.

50.2.1 **Tailoring to eliminate redundant effort.** The development of test outlines and test procedures in accordance with this standard is accomplished in five phases.

a. Definition of the equipment or system to be tested (paragraph 5.2.1)

b. Determination of testing requirements (paragraphs 5.2.2 through 5.2.6)

c. Test outline preparation and submittal (paragraphs 5.2.7, 5.2.8, and Appendix B)

d. Test procedure development and submittal (paragraphs 5.2.9, 5.2.10 and Appendix B)

e. Test procedure verification and final test procedure submittal (paragraphs 5.2.11 through 5.2.12.3).

If any of the above steps has been previously completed for a given equipment or system, that portion of the test development process may be waived. For example, if test procedures and test outlines have been previously developed for a specific equipment or system, the procuring organization may elect to have those test procedures reformatted in accordance with Appendix B of this standard and then submitted in accordance with paragraphs 5.2.8 and 5.2.10 of this standard.

50.2.2 **Documentation of equipment and systems after minor modification.** In cases where test outlines and test procedures have been prepared and validated for an equipment or system which subsequently undergoes minor modification, the following direction shall be used.

a. Define the differences between the modified and unmodified equipment or system.

b. List any functions, characteristics, or interfaces that have been deleted as a result of the modification and delete the corresponding test elements from the test outlines and test procedures.

c. List any functions, characteristics, or interfaces that have been added as a result of the modification and determine what test elements must be added to reflect these changes by using the instructions provided in paragraphs 5.2.2 and 5.2.3.

d. List any changes in EXPECTED RESULTS SHEETS of existing test procedures as a result of equipment or system modifications.

e. Incorporate the changes resulting from b, c, and d above into existing test outlines and test procedures. Document the test outlines and test procedures in the format prescribed by Appendix B and in accordance with paragraphs 5.2.8 and 5.2.10 of this standard.

f. Verify final test procedures in accordance with paragraph 5.2.11 of this standard.

50.2.3 The requirements of this standard may be altered to reduce costs and shorten the development time by permitting deviations that do not alter the basic development processes. Examples of such deviations are:

a. Permitting the use of different formats for documenting the development process. Processes such as interface analysis may be accomplished with the aid of automated data processing and as a result differ from the Interface Analysis format. A variety of formats may be acceptable for documenting the development process; however, no deviation should be permitted to the final test outline and test procedure formats specified in Appendix B.

b. Contracting organization review and approval points may be changed to accommodate difference in program complexity and experience level of test document developer.

c. The amount of supporting documentation that is submitted to the contracting organization may be changed by tailoring the Contract Data Requirements List (CDRL).

d. Requirements for type style, reproducible copy, and preparation for delivery may be changed or waived to accommodate individual program requirements.

Custodian:
Navy - OS

Preparing activity:
Navy - OS
(Project QCIC-N037)

Review activity:
Navy - AS, EC, SH

DATA ITEM DESCRIPTION

Form Approved
OMB No. 0704-0188
Exp. Date: Jun 30, 1986

1. TITLE	2. IDENTIFICATION NUMBER
TEST ELEMENTS LIST	DI-QCIC-80204

3. DESCRIPTION/PURPOSE

3.1 A test elements list provides a listing of functions, characteristics, or interfaces that may be verified or demonstrated through testing. Test elements lists are generated as an integral part of the engineering process for test procedure development described by DOD-STD-2106(NAVY).

4. APPROVAL DATE (YYMMDD)	5. OFFICE OF PRIMARY RESPONSIBILITY (OPR)	6a. DTIC REQUIRED	6b. GIDEP REQUIRED
860804	OS		

7. APPLICATION/INTERRELATIONSHIP

7.1 This Data Item Description (DID) describes data required by 5.2.4.2 and 5.2.6 of DOD-STD-2106(NAVY).

7.2 When applied in contracts, this DID should be tailored to the specific test elements required for the list by citing 10.3.1 or 10.3.2 below in the DD Form 1423.

(continued on page 2)

8. APPROVAL LIMITATION	9a. APPLICABLE FORMS	9b. AMSC NUMBER
		N3909

10. PREPARATION INSTRUCTIONS

10.1 Source document. The applicable issue of the documents cited herein, including their approval date, and dates of any applicable amendments and revisions shall be reflected in the contract.

10.2 Format. The test elements list shall be typed in the contractor's format on 8 1/2 by 11-inch (metric size A4) white bond paper.

10.3 Content.

10.3.1 Test elements (other test stages). Test elements that are recommended for testing in stages which are outside of the contractor's cognizance shall be listed in accordance with the requirements of 5.2.4.2 of DOD-STD-2106(NAVY).

10.3.2 Test elements (nonredundant). Nonredundant test elements which are the basis for the contractor's test outlines and test procedures shall be listed in accordance with the requirements of 5.2.6 of DOD-STD-2106(NAVY).

7. APPLICATION/INTERRELATIONSHIP (Continued)

7.3 Related Data Item Descriptions are:

DI-QCIC-80202 , Breakdown Diagram

DI-QCIC-80203 , Interface Analysis Record

DI-QCIC-80205 , Ship Test Outline

DI-QCIC-80206 , Shipboard Industrial Test Procedures

DATA ITEM DESCRIPTION

Form Approved
OMB No. 0704-0188
Exp. Date: Jun 30, 1986

1. TITLE	2. IDENTIFICATION NUMBER
BREAKDOWN DIAGRAM	DI-QCIC-80202

3. DESCRIPTION/PURPOSE

3.1 A breakdown diagram defines, in block form, the equipment or system for which test procedures are to be prepared. Breakdown diagrams are generated under the engineering process described by DOD-STD-2106(NAVY).

4. APPROVAL DATE (YYMMDD)	5. OFFICE OF PRIMARY RESPONSIBILITY (OPR)	6a. DTIC REQUIRED	6b. GIDEP REQUIRED
860804	OS		

7. APPLICATION/INTERRELATIONSHIP

7.1 This Data Item Description describes data required by 5.2.1 of DOD-STD-2106(NAVY).

7.2 Related Data Item Descriptions are:
DI-QCIC-80203, Test Elements List
DI-QCIC-80204, Interface Analysis Record

8. APPROVAL LIMITATION	9a. APPLICABLE FORMS	9b. AMSC NUMBER
		N3907

10. PREPARATION INSTRUCTIONS

10.1 Source document. The applicable issue of the documents cited herein, including their approval date, and dates of any applicable amendments and revisions shall be reflected in the contract.

10.2 Format and Content. Format and content of the breakdown diagram shall be in accordance with the requirements of 5.2.1.1 and 5.2.1.2 of DOD-STD-2106(NAVY).

DATA ITEM DESCRIPTION

Form Approved
OMB No. 0704-0188
Exp. Date: Jun 30, 1986

1. TITLE	2. IDENTIFICATION NUMBER
INTERFACE ANALYSIS RECORD	DI-QCIC-80203

3. DESCRIPTION/PURPOSE

3.1 The interface analysis record provides documentation of results of analysis of interfaces shown on a breakdown diagram. Interface analysis is the last step in determining test elements under the DOD-STD-2106(NAVY) engineering process.

4. APPROVAL DATE (YYMMDD)	5. OFFICE OF PRIMARY RESPONSIBILITY (OPR)	6a. DTIC REQUIRED	6b. GIDEP REQUIRED
860804	OS		

7. APPLICATION/INTERRELATIONSHIP

7.1 This Data Item Description describes data required by 5.2.2.3 of DOD-STD-2106(NAVY).

7.2 Related Data Item Descriptions are:
DI-QCIC-80202, Breakdown Diagram
DI-QCIC-80204, Test Elements List

8. APPROVAL LIMITATION	9a. APPLICABLE FORMS	9b. AMSC NUMBER
	NAVSEA Form 3990/1	3908

10. PREPARATION INSTRUCTIONS

10.1 Source document. The applicable issue of the documents cited herein, including their approval date, and dates of any applicable amendments and revisions shall be as reflected in the contract.

10.2 Format and Content. The interface analysis record shall be completed on NAVSEA Form 3990/1. Content of the record shall be in accordance with the requirements of 5.2.2.3 of DOD-STD-2106(NAVY).

DATA ITEM DESCRIPTION

Form Approved
OMB No. 0704-0188
Exp. Date: Jun 30, 1986

1. TITLE	2. IDENTIFICATION NUMBER
TEST ELEMENTS LIST	DI-QCIC-80204

3. DESCRIPTION/PURPOSE

3.1 A test elements list provides a listing of functions, characteristics, or interfaces that may be verified or demonstrated through testing. Test elements lists are generated as an integral part of the engineering process for test procedure development described by DOD-STD-2106(NAVY).

4. APPROVAL DATE (YYMMDD)	5. OFFICE OF PRIMARY RESPONSIBILITY (OPR)	6a. DTIC REQUIRED	6b. GIDEP REQUIRED
860804	OS		

7. APPLICATION/INTERRELATIONSHIP

7.1 This Data Item Description (DID) describes data required by 5.2.4.2 and 5.2.6 of DOD-STD-2106(NAVY).

7.2 When applied in contracts, this DID should be tailored to the specific test elements required for the list by citing 10.3.1 or 10.3.2 below in the DD Form 1423.

(continued on page 2)

8. APPROVAL LIMITATION	9a. APPLICABLE FORMS	9b. AMSC NUMBER
		N3909

10. PREPARATION INSTRUCTIONS

10.1 Source document. The applicable issue of the documents cited herein, including their approval date, and dates of any applicable amendments and revisions shall be reflected in the contract.

10.2 Format. The test elements list shall be typed in the contractor's format on 8 1/2 by 11-inch (metric size A4) white bond paper.

10.3 Content.

10.3.1 Test elements (other test stages). Test elements that are recommended for testing in stages which are outside of the contractor's cognizance shall be listed in accordance with the requirements of 5.2.4.2 of DOD-STD-2106(NAVY).

10.3.2 Test elements (nonredundant). Nonredundant test elements which are the basis for the contractor's test outlines and test procedures shall be listed in accordance with the requirements of 5.2.6 of DOD-STD-2106(NAVY).

7. APPLICATION/INTERRELATIONSHIP (Continued)

7.3 Related Data Item Descriptions are:

DI-QCIC-80202 , Breakdown Diagram

DI-QCIC-80203 , Interface Analysis Record

DI-QCIC-80205 , Ship Test Outline

DI-QCIC-80206 , Shipboard Industrial Test Procedures

DATA ITEM DESCRIPTION

Form Approved
OMB No. 0704-0188
Exp. Date: Jun 30, 1986

1. TITLE	2. IDENTIFICATION NUMBER
SHIP TEST OUTLINE	DI-QCIC-80205

3. DESCRIPTION/PURPOSE

3.1 A ship test outline defines a specific test requirement and briefly states the test purpose and method. The test outline allows scoping of test effort and provides guidance for development of the test procedures.

4. APPROVAL DATE (YYMMDD)	5. OFFICE OF PRIMARY RESPONSIBILITY (OPR)	6a. DTIC REQUIRED	6b. GIDEP REQUIRED
860804	OS		

7. APPLICATION/INTERRELATIONSHIP

7.1 This Data Item Description (DID) describes data required by 5.2.8 of DOD-STD-2106(NAVY).

7.2 Related Data Item Descriptions are:
DI-QCIC-80204, Test Elements List
DI-QCIC-80206, Shipboard Industrial Test Procedure

7.3 This DID supersedes DI-T-26251A.

8. APPROVAL LIMITATION	9a. APPLICABLE FORMS	9b. AMSC NUMBER
		N3910

10. PREPARATION INSTRUCTIONS

10.1 Source document. The applicable issue of the documents cited herein, including their approval date, and dates of any applicable amendments and revisions shall be reflected in the contract.

10.2 Format and Content. Format and content of the ship test outline shall be in accordance with Appendix B of DOD-STD-2106(NAVY).

10.3 Preparation. The test outline shall be prepared on white 20-pound bond paper or equivalent of 8 1/2 by 11-inch size. When more than one page per test outline is required, the binding shall be a staple in the upper left-hand corner. Only one side of the paper shall be used. Electrostatic methods of reproduction may be used. Where a standard abbreviation, acronym, or symbol does not exist, the full word or phase shall be used to avoid ambiguity.

DATA ITEM DESCRIPTION

Form Approved
OMB No. 0704-0188
Exp. Date: Jun 30, 1986

1. TITLE	2. IDENTIFICATION NUMBER
SHIPBOARD INDUSTRIAL TEST PROCEDURE	DI-QCIC-80206

3. DESCRIPTION/PURPOSE

3.1 A shipboard industrial test procedure provides the detailed description of actions to be performed during a specific test. The test procedure serves to verify that the system or equipment as installed aboard ship meets operational requirements.

4. APPROVAL DATE (YYMMDD)	5. OFFICE OF PRIMARY RESPONSIBILITY (OPR)	6a. DTIC REQUIRED	6b. GIDEP REQUIRED
860804	OS		

7. APPLICATION/INTERRELATIONSHIP

7.1 This Data Item Description (DID) describes data required by 5.2.10 and 5.2.12.2 of DOD-STD-2106(NAVY).

7.2 Test Procedures in an existing format may be obtained by citing 10.4 below in the DD Form 1423. (See 5.2.10 of DOD-STD-2106(NAVY)).

(continued on page 2)

8. APPROVAL LIMITATION	9a. APPLICABLE FORMS	9b. AMSC NUMBER
		N3911

10. PREPARATION INSTRUCTIONS

10.1 Source document. The applicable issue of the documents cited herein, including their approval date, and dates of any applicable amendments and revisions shall be as reflected in the contract.

10.2 General. The requirements of 10.3, Format and Content (New), shall apply unless 10.4, Format and Content (Existing), is cited in DD Form 1423.

10.3 Format and content (New). Format and content of the shipboard industrial test procedure shall be in accordance with Appendix B of DOD-STD-2106(NAVY).

10.4 Format and content (Existing). Existing test procedure shall be in accordance with the following requirements:

a. COVER SHEET, REVISION RECORD, and LIST OF EFFECTIVE PAGES described below are added to each test procedure;
b. New TEST EQUIPMENT USED and COMMENTS sheets are added if not included in existing test procedures.
c. The new COVER SHEET identifies the existing test procedure number and the ship for which the test procedure was previously used; and
d. Content is compliant with the technical requirements which are detailed in Section 5 of DOD-STD-2106(NAVY) and the test procedure will demonstrate the initial acceptable performance of equipment and systems in ships.

7. APPLICATION/INTERRELATIONSHIP (Continued)

7.3 Related Data Item Descriptions are:

DI-QCIC-80205, Ship Test Outline

DI-QCIC-80207, Verification Analysis Record

7.4 This DID supersedes UDI-T-23769A

---

10. PREPARATION INSTRUCTIONS (Continued)

10.4.1 Cover. The COVER SHEET shall reflect the test program and shall have blocks for procedure preparation, review and approval.

10.4.2 Revision Record/List of Effective Pages. The REVISION RECORD provides space to describe revisions to the test procedure including continuation sheets, if required. The LIST OF EFFECTIVE PAGES shall list each page of the test procedure and indicate whether it is an original page or a revised page.

10.4.3 Prerequisites. Immediate prerequisites listed shall include tests (by title). Parts or portions of tests shall be identified to include a listing of the prerequisite function.

10.5 Preparation. The test procedure shall be provided on white 20-pound paper or equivalent, with an 8 1/2 by 11-inch page size, and with a left-edge margin of 1.26 inches. Binding may be heavy-duty staple in the upper left-hand corner. Only one side of the paper shall be used. Electrostatic or similar reproduction is acceptable. Foldout enclosures shall not exceed 11-inches in height and shall have any 8 1/2-inch apron on the left edge. Pages shall be numbered with consecutive arabic numerals, located in the lower right hand corner. The Sign-Off Sheet shall indicate the total number of pages in the procedures, i.e., Page 1 of _. The typed and drafted test procedure master shall be of sufficient quality and clarity to provide successful microfilming.

DATA ITEM DESCRIPTION

Form Approved
OMB No. 0704-0188
Exp. Date: Jun 30, 1986

1. TITLE	2. IDENTIFICATION NUMBER
VERIFICATION ANALYSIS RECORD	DI-QCIC-80207

3. DESCRIPTION/PURPOSE

3.1 The verification analysis record provides documentation of problems and improvements noted during test procedure verification. Verification is the last step prior to finalizing test procedures developed under the DOD-STD-2106(NAVY) engineering process.

4. APPROVAL DATE (YYMMDD)	5. OFFICE OF PRIMARY RESPONSIBILITY (OPR)	6a. DTIC REQUIRED	6b. GIDEP REQUIRED
860804	OS		

7. APPLICATION/INTERRELATIONSHIP

7.1 This Data Item Description describes data required by 5.2.11.2 of DOD-STD-2106(NAVY).

7.2 The verification analysis record is completed during test procedure verification and provides information on suggested procedure changes and improvements.

7.3 Related Data Item Description is:
DI-QCIC-80206, Shipboard Industrial Test Procedure

8. APPROVAL LIMITATION	9a. APPLICABLE FORMS	9b. AMSC NUMBER
	NAVSEA Form 3990/2	N3912

10. PREPARATION INSTRUCTIONS

10.1 Source document. The applicable issue of the documents cited herein, including their approval date, and dates of any applicable amendments and revisions shall be as reflected in the contract.

10.2 Format and content. The verification analysis record shall be completed on NAVSEA Form 3990/2. Content of the verification record shall be in accordance with the requirements of 5.2.11.1 of DOD-STD-2106(NAVY). Handwritten entries are acceptable if clear and legible.

(TO DETACH THIS FORM, CUT ALONG THIS LINE.)

STANDARDIZATION DOCUMENT IMPROVEMENT PROPOSAL

(See Instructions – Reverse Side)

1. DOCUMENT NUMBER	2. DOCUMENT TITLE
DOD-STD-2106(NAVY)	DEVELOPMENT OF SHIPBOARD INDUSTRIAL TEST PROCEDURES

3a. NAME OF SUBMITTING ORGANIZATION	4. TYPE OF ORGANIZATION *(Mark one)*
	☐ VENDOR
b. ADDRESS *(Street, City, State, ZIP Code)*	☐ USER
	☐ MANUFACTURER
	☐ OTHER *(Specify)*: _____

5. PROBLEM AREAS

a. Paragraph Number and Wording:

b. Recommended Wording:

c. Reason/Rationale for Recommendation:

6. REMARKS

7a. NAME OF SUBMITTER *(Last, First, MI)* – Optional	b. WORK TELEPHONE NUMBER *(Include Area Code)* – Optional
c. MAILING ADDRESS *(Street, City, State, ZIP Code)* – Optional	8. DATE OF SUBMISSION *(YYMMDD)*

DD FORM 82 MAR 1426 PREVIOUS EDITION IS OBSOLETE.

INSTRUCTIONS: In a continuing effort to make our standardization documents better, the DoD provides this form for use in submitting comments and suggestions for improvements. All users of military standardization documents are invited to provide suggestions. This form may be detached, folded along the lines indicated, taped along the loose edge *(DO NOT STAPLE)*, and mailed. In block 5, be as specific as possible about particular problem areas such as wording which required interpretation, was too rigid, restrictive, loose, ambiguous, or was incompatible, and give proposed wording changes which would alleviate the problems. Enter in block 6 any remarks not related to a specific paragraph of the document. If block 7 is filled out, an acknowledgement will be mailed to you within 30 days to let you know that your comments were received and are being considered.

NOTE: This form may not be used to request copies of documents, nor to request waivers, deviations, or clarification of specification requirements on current contracts. Comments submitted on this form do not constitute or imply authorization to waive any portion of the referenced document*(s)* or to amend contractual requirements.

(Fold along this line)

(Fold along this line)

DEPARTMENT OF THE NAVY
Commanding Officer
Naval Ordnance Station
Standardization/Documentation Div. (524)
Indian Head, MD 20640-5000

NO POSTAGE NECESSARY IF MAILED IN THE UNITED STATES

OFFICIAL BUSINESS
PENALTY FOR PRIVATE USE $300

BUSINESS REPLY MAIL
FIRST CLASS PERMIT NO. 12503 WASHINGTON D. C.
POSTAGE WILL BE PAID BY THE DEPARTMENT OF THE NAVY

Commanding Officer
Naval Ordnance Station
Standardization/Documentation Div. (524)
Indian Head, MD 20640-5000