NAVMAT P-5100

SAFETY PRECAUTIONS

FOR SHORE ACTIVITIES

CHANGES 1 & 2 INCORPORATED

HEADQUARTERS NAVAL MATERIAL COMMAND
DEPARTMENT OF THE NAVY
WASHINGTON, D. C. 20360

JANUARY 1973

SAFETY PRECAUTIONS FOR SHORE ACTIVITIES

NAVMAT P-5100 – Change 2
March 1970

Attached are pages to NAVMAT P-5100 (formerly NAVSO P-2455, Department of the Navy Safety Precautions for Shore Activities), which should be substituted as shown in the following table. To correctly identify the manual's sponsor as NAVMAT, a revised front cover and a new title page also are transmitted herewith.

REASONS FOR CHANGE

Chapter 1 – to update, principally because of organizational changes.
Chapter 4 – to update and revise entire chapter on "Aviation"
Chapter 15 – 1550–to add new section on "Laser Safety"
Chapter 20 – to update material on "Hazardous Material"–with significant changes in the Labeling System (2080 - 2091)

RECORD OF REVISION

Remove	*Insert*
	Covers
June 1967 Title Page	March 1970 Title Page
Contents, pg. iii-xvi	Contents, Pg. iii - xvii
Pages 1-1, 1-2	Pages 1-1, 1-2
4-1 – 4-12	4-1 – 4-17
	15-27 – 15-29
20-9, 20-10	20-9, 20-10
20-15, 20-16	20-15, 20-16
20-21 – 20-22	20-21 – 20-35
Index, Pgs. I-1 thru I-10	Index, Pgs. I-1 thru I-10

PEN CHANGES

1705.12 Delete in entirety. See 1550-1556.

0863.3 Change last two lines to read as follows:
". . .at least 1 hour has elapsed, or such longer time as may be required by regulations of authorities having jurisdiction."

For sale by the Superintendent of Documents, U.S. Government Printing Office
Washington, D.C. 20402 - Price $4.95
Stock Number 0843-00021

SAFETY PRECAUTIONS FOR SHORE ACTIVITIES

NAVMAT P-5100

March 1970

Reviewed and Approved by

G. E. Moore, II
Rear Admiral, SC, USN
Deputy Chief of Naval Material
(Logistic Support)

DISTRIBUTION: (2 copies each)

SNDL PART I: 24A(1 cpy. ea.); 29G, 29H, 31G, 31H; 41A(10 cpy.); 41B(5 cpy. ea.); 41C; 41D; 42A; 42B; 42C through 42TT & 46(1 cpy. ea.), Annex A-T-100

SNDL PART II: E–Except (E3A-15 cpy.)
FF
FA–Except (FA6, FA7, FA10, FA25-10 cpy. ea.); (FA26-5 cpy.)
FB–Except (FB8, FB13, FB30-10 cpy. ea.); (FB10-15 cpy. ea.); (FB29-8 cpy. ea.); (FB31-5 cpy. ea.)
FC–Except (FC7-10 cpy.)
FD
FE–Except (FE2-34 cpy.)
FG
FH–Except (FH3-5 cpy. ea.)
FJ–Except (FJ23-10 cpy.)
FKA–Except (FKA6A1, FKA6A2, FKA6A6, FKA6A11, FKA6A12, FKA6B2, FKA7–10 cpy. ea.); (FKA6A8-30 cpy.); (FKA6A9-25 cpy.); (FKA6A10-15 cpy.)
FKL–Except (FKL1-30 cpy. ea.)
FKM–Except (FKM9-15 cpy. ea.); (FKM10-10 cpy. ea.)
FKN–Except (FKN1-5 cpy. ea.); (FKN2, FKN5-15 cpy. ea.); (FKN6-5 cpy.)
FKP–Except (FKP1A, FKP1B, FKP1E, FKP1J-15 cpy. ea.); (FKP1C-10 cpy. ea.); (FKP4C-5 cpy.)
FKQ
FKR–Except (FKR1A, FKR3A, FKR3H, FKR4A, FKR5-10 cpy. ea.); (FKR1B-8 cpy. ea.)
FS
FT–Except (FT6-10 cpy. ea.)
FW

RECORD OF REVISIONS

Change		Entered		Change		Entered	
No.	Date	By whom	Date	No.	Date	By whom	Date

CONTENTS

Article | Page

CHAPTER 1–PURPOSE, SCOPE, AND RESPONSIBILITIES

0101. Purpose of Publication 1-1
0102. Scope 1-1
0103. Responsibilities 1-2

CHAPTER 2–BUILDINGS AND GROUNDS

GENERAL HOUSEKEEPING

0201. Grounds 2-1
0202. Buildings 2-1
0203. Tools and Equipment 2-3
0204. Offices 2-3
0205. Fire Prevention 2-5

GENERAL HYGIENE

0210. Importance 2-7
0211. Individual Responsibility 2-7
0212. Ventilation 2-7
0213. Illumination 2-8
0214. Sight Conservation 2-8
0215. Hearing Conservation and Noise Control 2-8
0216. Pest Control 2-9
0217. Wash and Locker Rooms 2-9

FACILITIES

0220. Electrical Installations 2-10
0221. Elevator Safety 2-10
0222. Refrigeration 2-12

CHAPTER 3–MATERIALS HANDLING AND STORAGE

MATERIALS HANDLING

0301. Accident Causes 3-1
0302. Personal Protection 3-1
0303. Manual Handling 3-1
0304. Mechanical Handling 3-2

WAREHOUSE STORAGE

0310. Floor Capacities 3-2
0311. Stacking Materials 3-2
0312. Working Aisles 3-2
0313. Fire Prevention 3-3

Article | Page

MATERIALS HANDLING VEHICLES

0320. General Requirements 3-4
0321. Fork Trucks 3-5
0322. Straddle Trucks 3-5
0323. Tractor-Trailer Trains 3-6

CHAPTER 4–AVIATION

0401. Scope 4-1
0402. General Fire Precautions 4-1
0403. Housekeeping 4-2
0404. Lighting in Hangars/Shops/Work Areas 4-3
0405. Aircraft Crash and Rescue 4-3
0406. Danger Markings 4-4
0407. Movement of Aircraft 4-5
0408. Servicing and Ground Testing 4-5
0409. Aircraft Tire Maintenance 4-5
0410. Aircraft Fuel Cell Repair 4-5
0411. Aircraft Work Stands 4-6
0412. Passengers on Mobile Service/Support Equipment 4-6
0413. Aircraft Cleaning 4-6
0414. Automotive Equipment 4-7
0415. Battery and Plating Shops 4-7
0416. Painting and Dope/Finishing Room Procedures 4-7
0417. Engine Operations 4-8
0418. Aircraft Fuels and Fueling Operations 4-9
0419. Defueling 4-12
0420. Liquid Oxygen 4-13
0421. Ordnance 4-14
0422. Electricity and Electronics 4-15
0423. Arresting Gear, Barriers, and Barricades 4-16
0424. Catapults 4-16
0425. Jet Assisted Take-Offs 4-16
0426. Storing Aircraft in Hangars/Buildings During Storm Alerts 4-16

CHAPTER 5–LAND TRANSPORTATION

RAILROADS

0501. Personnel 5-1
0502. Equipment 5-2
0503. Fire Prevention 5-3
0504. Signals 5-4
0505. Operating Precautions 5-5
0506. Unloading Railroad Cars 5-6
0507. Shop Safety 5-6

MOTOR VEHICLES

0510. Definitions 5-8
0511. Operators' Qualifications and Requirements 5-9

Article Page

MOTOR VEHICLES (Continued)

0512. Basic Rules on the Road 5-9
0513. Emergency and Safety Equipment 5-12
0514. Special Precautions 5-13
0515. Special Types of Vehicles 5-13
0516. Safety for Riders 5-18
0517. Transporting Explosives 5-18

GARAGE SAFETY

0520. General Housekeeping 5-21
0521. Protection of Personnel 5-21
0522. Fire Prevention 5-21
0523. Equipment and Tools 5-22
0524. Repairing and Servicing Vehicles 5-22
0525. Fueling Motor Vehicles 5-24

CHAPTER 6–LONGSHORING AND WATERFRONT OPERATIONS

CARGO HANDLING

0601. Introduction 6-1
0602. Safety for Personnel During Cargo Handling 6-1
0603. Preparing Pier and Cargo Gear 6-1
0604. Loading and Discharging Cargo 6-2
0605. Stowing and Breaking Down Loads 6-3

HANDLING OF FLAMMABLES

0610. Hazards in Handling Flammables 6-3
0611. Precautions Preliminary to Loading Flammables in Port 6-3
0612. Loading of Flammables 6-5
0613. Precautions After Loading or Discharging 6-7

WATER SAFETY

0620. Life Rings 6-7
0621. Life Preservers and Safety Belts 6-7

DIVING

0625. General 6-7
0626. Self-Contained Diving 6-9

BOATS AND FLOATING EQUIPMENT

0630. Scope 6-10
0631. Responsibility 6-10
0632. Operation 6-10
0633. Safety Equipment 6-10
0634. Posting Precautions and Instructions 6-10
0635. Fire Prevention in Power Boats 6-10
0636. Fueling Gasoline Power Boats 6-12
0637. Starting the Engine After Fueling 6-13

Article | Page

CHAPTER 7–POWER TRANSMISSION

MAIN MACHINERY

0701. Unintentional Starting of Engines 7-1
0702. Relief Valves 7-1
0703. Air Lines 7-1
0704. Reciprocating Steam Engines 7-1
0705. Electrical Installations 7-1
0706. Remotely Controlled Machinery 7-2

PUMPS

0710. Reciprocating Pumps 7-2
0711. Centrifugal, Propeller, and Rotary Pumps 7-2
0712. Pump Pressure-Regulating Governors 7-3

GUARDS

0715. Gears and Friction Drives 7-3
0716. Sprockets 7-3
0717. Belts 7-3
0718. Shafting 7-4
0719. General Standard Guards 7-4

STATIONARY BOILERS

0725. General 7-4
0726. Operating Precautions 7-5
0727. Fire Prevention 7-7

MARINE BOILERS

0730. Shore Activity Serviced 7-7

AIR RECEIVERS AND COMPRESSORS

0735. General Requirements 7-7
0736. Air Receivers (Compressed Air Tanks) 7-8
0737. Air Compressors 7-8

CHAPTER 8–CONSTRUCTION

GENERAL

0801. Scope 8-1
0802. Drinking Water 8-1
0803. Temporary Toilet Facilities 8-1
0804. First-Aid Stations 8-1
0805. Personal Protection 8-2
0806. Lighting 8-2
0807. Gas and Smoke 8-2
0808. Salamanders 8-2
0809. Electric Wiring and Equipment 8-3
0810. Handling and Storing Materials 8-4
0811. Wheelbarrows 8-5
0812. Ladders and Scaffolds 8-6

Article | Page

GENERAL (Continued)

0813. Flammable Liquids and Fire Prevention 8-6
0814. Concrete Construction 8-6
0815. Steel Erection 8-8

WEIGHT HANDLING AND CONSTRUCTION EQUIPMENT

0820. Operating Rules 8-9
0821. Ropes 8-13
0822. Sheaves and Drums 8-14
0823. Chains 8-15
0824. Hooks 8-15
0825. Crane Operation 8-15
0826. Crawler, Truck, and Tractor-Mounted Cranes 8-17
0827. Locomotive Cranes 8-18
0828. Portal, Gantry, Hammerhead, Floating, and Overhead Traveling Cranes 8-19
0829. Derricks 8-19
0830. Hoists and Elevators 8-21
0831. Paving and Concrete Equipment 8-23

LADDERS AND SCAFFOLDS

0835. Ladders 8-25
0836. Scaffolds 8-27

DEMOLITION

0840. General 8-59
0841. Warning Signs and Lights 8-59
0842. Preparation of Location 8-59
0843. Sidewalk Sheds 8-60
0844. Removal of Materials 8-61
0845. Stairs, Passageways, and Ladders 8-61
0846. Removal of Walls 8-61
0847. Catch Platforms 8-62
0848. Removal of Floors 8-62
0849. Demolition of Steel Construction 8-63

BLASTING

0855. General 8-63
0856. Stowage and Handling of Explosives 8-64
0857. Drilling 8-64
0858. Portable Air Compressors 8-65
0859. Loading Charges 8-65
0860. Preparation for Firing 8-65
0861. Blasting Machines 8-66
0862. Electrical Wiring 8-66
0863. Inspection After Blasting 8-66
0864. Misfires 8-67

Article **Page**

CLEARING AND GRADING

0870. General 8-68
0871. Felling and Trimming Trees 8-68
0872. Burning 8-68
0873. Poisonous Plants 8-69
0874. Bulldozers and Tractors 8-69
0875. Graders 8-70
0876. Scrapers 8-70

EXCAVATION

0880. General 8-71
0881. Protection of the Public 8-71
0882. Bracing of Excavation 8-72
0883. Loaders 8-72
0884. Power Shovels 8-73
0885. Jacks 8-73
0886. Ramps and Runways 8-74
0887. Trenches 8-74
0888. Ditching Machines 8-75
0889. Pneumatic Paving Breakers and Rock Drills 8-75
0890. Pile Driving 8-76
0891. Well Drilling 8-76
0892. Dredging 8-77

CHAPTER 9—METAL WORKING
THE MACHINE SHOP

0901. Scope 9-1
0902. Housekeeping 9-1
0903. Protective Clothing 9-1
0904. Machine Guards 9-1
0905. Preliminary Precautions 9-1
0906. Repairing Machinery 9-2
0907. Operating Precautions 9-2
0908. Wiring 9-2

MACHINE TOOLS

0915. Lathes 9-2
0916. Milling Machines 9-3
0917. Shapers and Planers 9-3
0918. Drill Presses 9-3
0919. Boring Mills 9-4
0920. Metal Saws—General 9-4
0921. Circular Saws 9-4
0922. Band Saws 9-4
0923. Sheet Metal Work 9-5
0924. Rubber Making Machinery 9-5
0925. Forming Rolls 9-5

Article Page

MACHINE TOOLS (Continued)

0926. Buffers, and Abrasive Grinding Wheels—General 9-5
0927. Operating Grinding Wheels 9-6
0928. Power (Punch) Presses 9-6

FOUNDRIES

0935. Health Requirements 9-7
0936. Housekeeping 9-7
0937. Scrap Yards 9-7
0938. Sand Mills, Cutters, and Sifters (Screens) 9-7
0939. Molding and Core Making 9-8
0940. Cupolas and Furnaces 9-8
0941. Crucibles 9-9
0942. Moisture in Crucibles 9-9
0943. Preventing Cracks in Crucibles 9-9
0944. Handling Crucibles with Tongs 9-10
0945. Metal in Crucibles 9-10
0946. Cleaning and Finishing Rooms 9-10

FORGES

0950. Personal Protective Equipment 9-11
0951. Tools 9-11
0952. Hammers, Shears, Presses 9-11
0953. Furnaces—Oil or Gas 9-13
0954. Dipping Material 9-13
0955. Potassium Cyanide and Sodium Cyanide 9-13
0956. Tumbling Barrel 9-14
0957. Cranes 9-14

METALS AND METAL TREATMENTS

0960. Toxic Metals 9-14
0961. Magnesium Alloys 9-14
0962. Heat Treating 9-14
0963. Pickling 9-15
0964. Electroplating Shops 9-15

CHAPTER 10—WELDING

GENERAL

1001. Scope 10-1
1002. Terms Used 10-1
1003. Location 10-1
1004. Hazards 10-2
1005. Metal Containers and Hollow Parts 10-2
1006. Welding Apparatus 10-2
1007. Fire-Extinguishing Equipment 10-3

PERSONNEL PROTECTION

1010. Protective Clothing 10-4
1011. Eye Protection 10-4

Article | Page

PERSONNEL PROTECTION (Continued)

1012. Respiratory Protection 10-5
1013. Warning About Hot Metal 10-6

GAS WELDING

1020. Cylinders 10-6
1021. Fuel-Gas Cylinders 10-7
1022. Oxygen Cylinders 10-7
1023. Cylinder Valves 10-8
1024. Regulators 10-9
1025. Portable Manifolds 10-10
1026. The Torch 10-10
1027. Hose 10-11
1028. Welding on Shipboard 10-11
1029. Stringing Hose 10-12

ELECTRIC ARC WELDING

1035. Protection from Shock 10-13
1036. Electrode Holders 10-13
1037. Cable and Couplings 10-14
1038. Ground Returns 10-15
1039. Inert-Gas Metal-Arc Welding 10-15

WELDING IN CONFINED SPACES

1045. Hazards of Inadequate Ventilation 10-16
1046. Ventilation Required 10-16
1047. Variables Affecting Ventilation 10-16
1048. Space Classification 10-16
1049. Where Positive Ventilation Not Required 10-17
1050. Individual Ventilation Devices 10-17
1051. General Shop or Space Ventilation 10-17
1052. Indoor Welding of Galvanized Iron or Steel, Brass or Bronze 10-18
1053. Explosive Fumes 10-18
1054. Certification of Closed Compartments 10-19

CHAPTER 11—WOODWORKING

GENERAL

1101. Application and Scope 11-1
1102. Instruction of Personnel 11-1
1103. Working Areas 11-1
1104. Defective Equipment 11-1
1105. Care of Equipment 11-2
1106. Safety Equipment 11-2
1107. Dust Control 11-2
1108. Hearing Protection 11-3

Article **Page**

WOODWORKING MACHINES

1110. Circular Saws 11-3
1111. Band Saws 11-5
1112. Shapers 11-6
1113. Tenoning Machines 11-7
1114. Jointers 11-7
1115. Planing, Molding, Sticking, Matching Machines, and Profile and Swing Head Lathes 11-8
1116. Hand Planes and Draw Knives 11-8
1117. Boring and Mortising Machines 11-8
1118. Sanding Machines 11-9
1119. Combination or Universal Woodworking Machines 11-9

SAWMILLS

1125. Housekeeping 11-10
1126. Personnel Protection 11-10
1127. Safe Operating Procedures 11-10

CHAPTER 12–PIPING AND PLUMBING; SEWAGE AND WATER TREATMENT

PIPING AND PLUMBING

1201. Introduction 12-1
1202. Work on Piping 12-1
1203. Sewer Work 12-1
1204. Protective Clothing and Equipment 12-1
1205. Tools–General 12-2
1206. Pipe Wrenches 12-2
1207. Handling Pipe 12-2
1208. Piping System Repair 12-3
1209. Valve Stems 12-5
1210. Inspection of Sea Valves in Drydock 12-5
1211. Inspection of Traps 12-5
1212. Thawing Frozen Pipes Inside Buildings 12-5
1213. Identification of Piping Systems 12-5
1214. New Piping Work 12-5
1215. Air-Compressor Pipe Lines 12-5
1216. Gasoline Blowtorches and Plumbers' Furnaces 12-6
1217. Liquefied Petroleum Gas Torches and Furnaces 12-7

SEWAGE AND WATER TREATMENT PLANTS

1220. Introduction 12-8
1221. Housekeeping 12-8
1222. Open Tank Precautions 12-8
1223. Personal Protection 12-8
1224. Personal Hygiene 12-8
1225. Safety Equipment 12-9
1226. Respiratory Protective Apparatus 12-9
1227. Portable Ventilating Equipment 12-9
1228. Illumination 12-9

Article Page

SEWAGE AND WATER TREATMENT PLANTS (Continued)

1229. Warning Signs 12-10
1230. Sewer Maintenance 12-10
1231. Entering Deep Sewers 12-10
1232. Purging Sludge Holders 12-10
1233. Chlorine Leaks 12-11
1234. First Aid for Chlorine Poisoning 12-11
1235. Piping in Treatment Plants 12-11

CHAPTER 13–PAINTING
GENERAL

1301. Fire Hazards 13-1
1302. Contamination of Air 13-1
1303. Paint Storage 13-1
1304. Paint Removal with Torch 13-1
1305. Toxic and Poisonous Substances 13-1

PAINTING

1310. Painting Area 13-1
1311. Health Hazards and Protective Equipment 13-2
1312. Spray Painting 13-2
1313. Bituminous and Plastic Coatings 13-3
1314. Rust-Preventive Compounds 13-4
1315. Painting by Dipping 13-5
1316. Cleaners and Solvents 13-5

ABRASIVE BLASTING

1320. General 13-5
1321. Protective Clothing 13-6
1322. Special Features of Equipment 13-6
1323. Bodily Contact with Abrasive 13-6
1324. Hose Breakage 13-7
1325. Dust 13-7
1326. Surges in Abrasive-Blast Line 13-7
1327. Communication 13-7
1328. Staging 13-7
1329. Machine Operation 13-8
1330. High Pressure Air Flasks 13-8

CHAPTER 14–PORTABLE TOOLS
HAND TOOL

1401. Definition 14-1
1402. General Precautions 14-1
1403. Axes, Adzes, Hatchets 14-1
1404. Braces and Bits 14-2
1405. Chisels, Punches, Drift Pins 14-2
1406. Drills 14-2
1407. Files, Rasps 14-2

Article Page

HAND TOOLS (Continued)

1408. Hammers 14-3
1409. Pipe Cutters 14-3
1410. Pliers, Side Cutters, Diagonal Cutters 14-3
1411. Saws 14-3
1412. Spades, Shovels, Pick-Axes 14-4
1413. Screwdrivers 14-4
1414. Threading Dies 14-4
1415. Whetstones and Steels 14-5
1416. Wrecking Bars, Crowbars 14-5
1417. Wrenches 14-5
1418. Machete, Scythe, Sickle, Bolo 14-5

PORTABLE POWER TOOLS

1425. General Precautions 14-6
1426. Power Twist Drills 14-6
1427. Pneumatic Tools 14-6
1428. Pneumatic Rock Drills 14-7
1429. Power Hammers 14-7
1430. Power Wrenches 14-7
1431. Powder Actuated Tools 14-7
1432. Power Saws 14-8
1433. Buffers and Abrasive Grinding Wheels 14-8

CHAPTER 15–ELECTRICITY AND ELECTRONICS

GENERAL

1501. Personal Protection 15-1
1502. Safety From Fire 15-5
1503. Inspection and Maintenance 15-6

ELECTRICAL EQUIPMENT

1510. Special Warnings to Personnel 15-7
1511. Securing Switches Preliminary to Work 15-7
1512. Grounding of Metal Parts 15-7
1513. Portable Electric Equipment 15-9
1514. Switches and Circuit Breakers 15-9
1515. Working on Transformers 15-11
1516. Electrical Substation Fencing 15-12
1517. Cable 15-12
1518. Fuses 15-12
1519. Series-Wound Motor 15-12
1520. Wet and Dry Cell Batteries 15-12

ELECTRICAL CIRCUITS

1525. Working on Energized Circuits 15-14

Article | Page

LINE CONSTRUCTION AND DISTRIBUTION

1530. Scope 15-16
1531. Equipment Used in Line Work 15-16
1532. Handling Wire 15-18
1533. Working on Poles, Scaffolds, Staging, and Trees 15-19
1534. Working with Potheads 15-20
1535. Working on Underground Systems 15-20

ELECTRONIC SAFETY

1540. Scope 15-20
1541. R-F Warning Signs 15-21
1542. Electronics–General 15-21
1543. Radio Frequency Radiation Hazards 15-22
1544. X-Ray Radiation Hazards From High Voltage Electronic Equipment 15-23
1545. Working on Antennas 15-24
1546. Cathode-Ray Tubes 15-24
1547. Radioactive Materials Used with Radiac Equipment 15-25
1548. Electron Tubes Containing Radioactive Materials 15-25
1549. Sonar 15-25

LASER SAFETY

1550. Scope and Definitions 15-27
1551. Hazards 15-27
1552. Laser Installations 15-27
1553. Laser Equipment 15-28
1554. Operating Precautions 15-28
1555. Personnel Precautions 15-28
1556. Field Precautions 15-29

CHAPTER 16–MEDICAL FACILITIES

1601. Handling and Storage of Gases 16-1
1602. X-Ray Department 16-1
1603. Ambulance Safety 16-2

CHAPTER 17–LABORATORIES

1701. General 17-1
1702. Personal Protection 17-1
1703. Laboratory Equipment 17-2
1704. Laboratory Glassware 17-2
1705. Electric Apparatus 17-3
1706. Fire and Explosion 17-4
1707. Chemical Storage 17-5
1708. Handling Chemicals 17-6

CHAPTER 18–PHOTOGRAPHY

1801. Applicable Precautions 18-1
1802. The Photographic Laboratory 18-1

Article **Page**

1803. Film 18-1
1804. Electrical Equipment 18-1
1805. Flash Equipment 18-2
1806. Chemical Hazards 18-3

CHAPTER 19–COMMISSARY, MESSING, AND EXCHANGE FACILITIES
COMMISSARY AND MESSING

1901. General 19-1
1902. Navy Exchange 19-1
1903. Stock Room 19-2
1904. Receiving Room 19-2
1905. Commissary 19-3
1906. Butcher Shop 19-3
1907. Galley 19-4
1908. Mess 19-6
1909. Scullery 19-7
1910. Dumb-Waiters 19-7

EXCHANGE FACILITIES

1915. Cobbler Shops 19-7
1916. Tailor Shop 19-8
1917. Dry Cleaning Shop 19-9
1918. Barber Shop 19-13
1919. Beauty Shop 19-13
1920. Watch Repair Shop 19-13
1921. Laundry 19-13

CHAPTER 20–HAZARDOUS MATERIALS
GENERAL

2001. Scope 20-1
2002. Purpose 20-1
2003. Assistance and Guidance 20-1

PETROLEUM FUELS

2010. Definition and Scope 20-2
2011. Instruction of Personnel 20-2
2012. Flash Point 20-2
2013. Storage 20-2
2014. Factors Necessary for Combustion 20-2
2015. Fuel Oil Vapor 20-3
2016. Controlling Vapors 20-3
2017. Accidental Ignition Causes 20-4
2018. Fire Fighting Equipment 20-5
2019. Extinguishing Fires 20-5
2020. Health Hazards 20-6
2021. Gasoline 20-7
2022. JP-5 Fuel 20-10

564-350 O - 74 - 2

Article Page

PROPELLANT LIQUID AND OXIDIZERS

2030. Characteristics and Precautions 20-10

COAL

2035. Handling 20-10
2036. Danger of Spontaneous Ignition 20-11

COMPRESSED GASES AND CYLINDERS

2040. Scope 20-11
2041. Valve Safety Devices 20-12
2042. Painting 20-12
2043. Repairing Cylinders and Valves 20-13
2044. Care and Testing of Cylinders 20-13
2045. Storage and Handling 20-14
2046. Storage of Compressed Gases 20-14
2047. Toxic Hazards 20-15
2048. Empty Cylinders 20-15
2049. Specific Compressed Gases 20-16

SOLVENTS

2055. General 20-17

PLASTICS

2056. General 20-20

THE METALS AND THEIR COMPOUNDS

2057. General 20-21

DUSTS

2058. Mineral Dusts 20-22

RADIOACTIVE MATERIALS

2059. General 20-24

SPECIAL MATERIALS

2060. Fire Resistant Hydraulic Fluid 20-24

WORK IN CONFINED SPACES

2070. Definition of Terms 20-25
2071. Certification of Closed Compartments 20-25
2072. Gas-Free Engineer 20-25
2073. Safety Notations 20-26
2074. Explosives 20-27
2075. Combustible Materials 20-27
2076. Naval Vessels 20-27
2077. Suspected Compartments 20-28
2078. Air Sampling and Analysis 20-29
2079. Toxic Gases 20-30
2080. Inerting and Pressing Up 20-30

Contents

Article **Page**

LABELING

2085. Purpose 20-31
2086. Scope 20-31
2087. Responsibilities 20-32
2088. Additional Labeling 20-32
2089. Available Labels 20-33
2090. Label Design 20-33
2091. Guidance on Hazardous Materials 20-35

INDEX I-1

Chapter 1
PURPOSE, SCOPE, AND RESPONSIBILITIES

0101. PURPOSE OF PUBLICATION

This publication promulgates safety precautions to activities of the Navy in accordance with the responsibilities assigned to the Chief of Naval Material by OPNAV INSTRUCTION 5100.8 (series).

0102. SCOPE

1. **Applicability.** The Safety precautions contained in this publication are applicable to all Navy personnel, Military and Civilian, to all Naval commands and activities ashore, and to the Marine Corps to the extent determined by the Commandant of the Marine Corps. They are of necessity basic and general in nature and are not inclusive of all conceivable operations and functions involved in the great variety of Navy activities. In many instances references are made to other publications for detailed safety precautions applicable to specific conditions. A lack of documented hazards and pertinent precautions is not to be construed as an indication of their nonexistence or unimportance; therefore, the continuous cooperation and vigilance of all personnel is needed to see that all operating procedures and work methods do not unnecessarily expose personnel to injury or property to loss or damage.

2. **Mandatory and Advisory Precautions.** Mandatory precautions contained in this publication are characterized by use of the words *shall, must, prohibited*. Precautions which are not mandatory but are recommended or advisory in nature are indicated by use of the words *should, will, may*.

3. **Supplemental Precautions.** Where safety precautions are considered to be necessary, but have not been provided, or where existing precautions are judged to be inadequate, the commanding officer shall issue new or supplementary precautions in the manner and degree deemed necessary for the protection of personnel and property. He shall report the omission to the Chief of Naval Material through the chain of command so that this publication may be appropriately revised.

4. **Changes.** As the need arises, changes to this publication will be issued by the Chief of Naval Material in the form of new pages, pen and ink changes, or a complete new publication. Commanding officers are encouraged to submit recommendations for changes aimed at clarification and improvement to CNM.

5. **Conflicting Regulations.** If precautions and regulations promulgated by the various commands, bureaus, and offices of the Navy are found to be in conflict with this publication, notice of such variance shall be sent to the Chief of Naval Material. Until the conflict has been resolved, interim measures which will achieve optimum safety shall be at the discretion of the commanding officer.

6. **Posting Safety Precautions.**

a. Posting is the displaying of any plate, placard, painted sign, or written material in a conspicuous place.

b. Safety precautions shall be posted in a conspicuous place on or near any equipment, component or material which presents a hazard to the security of the activity or to the safety of personnel. For example, those precautions necessary for the safe handling, stowage, and security of dangerous materials such as explosives, or flammables shall be posted at or near the storage spaces designated for those materials.

0103. RESPONSIBILITIES

1. **Command Officers.** U. S. Navy Regulations, Article 0712, is quoted as follows: "The Commanding Officer shall require that persons concerned are instructed and drilled in all applicable safety precautions and procedures, that these are complied with, and that applicable safety precautions, or extracts therefrom, are posted in appropriate places. In any instance where safety precautions have not been issued or are incomplete, he shall issue or augment such safety precautions as he deems necessary, notifying, when appropriate, higher authorities concerned."

2. **Supervisory Personnel.** It is the responsibility of supervisory personnel to ensure that their subordinates are instructed in and carry out the applicable safety precautions for their work and work areas.

3. **Individuals.** Each individual is responsible for knowing, understanding and observing all safety precautions applicable to his work and work area. In addition, he is responsible for the following:

a. Each individual shall report for work rested and emotionally prepared for the tasks at hand.

b. He shall use normal prudence in all his functions, commensurate with the work at hand.

c. He shall report any unsafe condition, or any equipment or material which he considers to be unsafe, and any unusual or developing hazards.

d. He shall warn others whom he believes to be endangered by known hazards or by failure to observe safety precautions, and of any unusual or developing hazards.

e. He shall report to his supervisor any accident, injury or evidence of impaired health occurring in the course of work.

f. He shall wear or use the protective clothing and/or equipment of the type required, approved and supplied for the safe performance of his work.

g. He shall report for work suitably clothed for his assigned tasks.

(1) Suitable clothing is that normally worn by members of the trade or profession.

(2) Certain hair styles and beards are hazardous around machinery and open flame and may interfere with vision or use of breathing devices. They shall be suitably restrained in caps or nets or altered/removed.

(3) Safety shoes or foot protection devices, including non-spark and non-slip shoes shall be worn when hazards so indicate.

(4) Jewelry, loose scarfs and ties shall not be worn when they might subject the wearer to additional hazard.

(5) Individuals requiring eye correction, hearing aid or prosthetic devices to assure prompt perception and avoidance of hazards must use such devices while at work.

Chapter 2
BUILDINGS AND GROUNDS

GENERAL HOUSEKEEPING

0201. GROUNDS

1. **Fire Hazards.**

a. **Grass and Weeds.** Dry weeds and grass shall not be permitted to grow unchecked within 50 feet of buildings. Grass around buildings should be cut frequently and weeds cut or destroyed by weedkiller compounds.

b. **Construction Areas.** All construction areas and storage yards shall be burned or otherwise cleared before lumber or other combustible material is delivered on the site. A clear space of 50 feet around the outer boundary of storage yards is desirable. Where clearing is accomplished by burning, the operation shall be supervised by the fire department.

c. **Combustible Materials.** Areas beneath or within 50 feet of buildings shall not be used for storage of combustible materials and shall be regularly inspected to keep them free from accumulation of debris and combustible vegetation.

d. **Flammable Liquids.** Flammable liquids shall not be poured into sewers or drains or on the ground. They shall be collected in steel drums, cans, or other designated receptacles and disposed of as prescribed by local command.

2. **Personnel Hazards.**

a. **Tripping Hazards.** Personnel should not leave equipment or material of any kind on the ground in walking areas even for a short period of time. Walkways and steps should be kept as free as practicable of uneven surfaces and any abrupt changes in level shall be marked with the appropriate hazard marking in accordance with NAVDOCKS P-309, *The Application of Color to Shore Establishment.*

b. **Slipping Hazards.** The best method of meeting ice and snow slipping hazards is to remove the snow or slush before it forms into ice. Where this is not practicable, slipperiness can be reduced by spreading gritty material, such as sand, gravel, or fine cinders over the slippery surfaces. Any spots of liquids or other slippery substances should be removed from walkways and steps as soon as practicable.

0202. BUILDINGS

1. **Maintaining Order.** Working spaces, new construction, and repair areas shall be regularly inspected to maintain order and cleanliness and to eliminate fire hazards.

2. **Warning Signs and Barricades.** It is inevitable that a building will have transitory hazards such as floor openings or protrusions. When such hazards are present appropriate warning signs, hazard markings, or barricades with adequate lighting shall be provided.

3. **Rubbish Disposal**

a. **Scrap.** Rubbish and scrap materials shall be disposed of in properly identified cans, receptacles, or bins. All rubbish shall be cleared from buildings at the end of each workday and work areas shall be maintained free from accumulations of combustible debris.

b. **Flammables.** Highly flammable materials such as oily rags, shall be kept in self-closing metal containers, and their contents shall be disposed of at the end of the work day.

c. **Ashes.** Ashes shall be deposited in noncombustible containers. The containers must have covers and must be lo-

cated at least 2 feet from combustible walls, partitions, or stored material.

4. **Walkways and Aisles**

a. **Free of Obstructions.** Ample, well-defined space for aisles shall be provided in buildings and in offices and shall be kept free from all obstruction, including such devices as extension cords.

b. **Blind Corners.** Collision hazards at blind corners can usually be eliminated by the installation of a mirror set at the proper angle.

c. **Floor Elevations.** Differences of floor elevations in aisles should be clearly marked. When necessary, handrails shall be erected.

d. **Running.** There shall be no running in buildings at any time because of slipping, tripping, and collision hazards.

5. **Floors**

a. **Wet or Waxed Floors.** Wet or highly polished floors may present slipping hazards. To minimize this danger, floors shall be kept dry during working hours. When wax is applied it should be an approved water emulsion wax of the nonslip type and applied in accordance with applicable instructions.

b. **Grease.** Grease, oils, or other materials which tend to make decks or floors slippery shall be cleaned up promptly. Absorbing compounds (but not sawdust) may be used to eliminate the slippery condition.

c. **Floor Coverings.** Rugs shall be laid smoothly, and loose or torn floor covering shall be promptly repaired, replaced, or removed. Rugs not securely fastened to the floor shall have a rubberized nonslip backing or shall be laid over pads made of rubber or other slip-resistant material.

d. **Hose and Cable.** Welding areas shall be adequately shielded. Hose from oxyacetylene cylinders, steam lines, air lines, electric welding leads, electric cables, and extension cords shall be kept off decks and floors by means of trees, hooks, or troughs.

e. **Cleaning Liquids.** Floor cleaning liquids should be limited to those having a flash point above 100°F. to comply with Fire Prevention Regulations. Gasoline, naphtha, thinners, or any other highly flammable liquids shall not be used to clean floors.

f. **Tripping Hazards.** Floors shall be kept free from protruding nails, splinters, holes, and loose boards.

6. **Stairs**

a. **Treads.** Stair treads, unless made of wood, should have antislip surfaces.

b. **Handrails.** Stairways over 88 inches wide shall be provided with an auxiliary handrail in the center, and a handrail on each side. Stairways over 44 inches but less than 88 inches wide shall have railings on each side. Stairways between 22 and 44 inches should have at least one handrail.

c. **Height of Rails.** Stairway openings shall be guarded by railings not less than 36 inches nor more than 42 inches from floor surfaces to top of railing. Stairway railings shall not be less than 30 inches nor more than 34 inches from the top of the railing to the surface of the tread at the face ot the riser. Intermediate railings or suitable screening shall be provided from the top of the railing down to the floor or treads.

d. **Light and Care.** Stairs should be well lighted. Stairs should be kept clean, dry, and free of slippery substances, refuse, or stored material.

e. **Use of Stairs.** Where practical, the duties of employees should be planned so that they will require as little use of the stairs as possible. Employees should be instructed to *walk,* not run on the stairs and to use the handrail.

7. **Doors**

a. **Opening Doors.** Haste in opening doors and entering doorways shall be prohibited, since it is impossible in most cases to determine whether another person is opposite the door or whether obstructions may be present. Signs shall be posted on doors opening into passageways: CAUTION OPEN DOOR SLOWLY

b. **Glass Panels.** Glass vision panels of average eye height are desirable in solid doors. Sight panels in fire doors shall be in accordance with the provisions prescribed in

the *Standard for the Installation of Fire Doors and Windows,* NFPA No. 80. The glass shall be of sufficient thickness to withstand shattering under all conditions of door closing. Large glass panels in doors through which vehicles (bicycles, motorized carts, etc.) pass shall be fitted with wire protectors or guards. It is recommended that all large glass doors and glass panels in doors be made of tempered (heat-strengthened) plate glass.

c. **Door Stops.** Door stops of the loose type shall be put in a safe place when not in use so as to prevent their becoming a tripping hazard.

d. **Spring Tension.** Springs on self-closing doors shall be kept at the proper tension so that doors will not close too rapidly.

e. **Revolving Doors.** One person at a time, and only one, shall enter a section of a revolving door.

0203. TOOLS AND EQUIPMENT

Almost invariably tools and equipment are designed for specific uses, and safety in such cases is prescribed in detail in the appropriate chapters. See Chapter 14 for precautions concerning commonly used small tools and portable power tools. In general, however, the following precautions always apply:

1. Tools shall not be left on floors, decks, platforms, scaffolds, stairs, ladders, ledges, rafters, or the moving parts of machines.
2. Lockers, cribs, bins, sacks, or storerooms shall be provided for the proper storage of tools and equipment.
3. Machinery and equipment shall be properly installed to prevent hazardous movement during operation.

0204. OFFICES

1. General

a. **Ceiling Fixtures.** Fixtures attached to ceilings shall be kept securely fastened. Personnel shall at no time work directly underneath fixtures which are being replaced or repaired. Fluorescent tube fixtures shall be protected from damage by means of louvers, hinged covers, ceiling troughs, or the equivalent. Tubes exceeding 40 inches in length shall be provided with supplementary supporting brackets or other means of preventing drop-out because of vibration.

b. **Pencils and Pens.** Sharp-pointed pencils or uncapped fountain pens shall not be carried in belts or placed upright in the handkerchief pockets of coats or in shirt pockets.

c. **Scissors.** Care shall be taken to see that sharp-pointed scissors are kept in a secure position at all times. If dropped they can penetrate the foot.

2. **Filing Cabinets.** Overbalancing from various causes is the primary hazard in connection with the use of filing cabinets. The following precautions against overbalancing and other hazards should be taken:

a. **Securing to Floor or Wall.** Individual upright filing cabinets should be secured to prevent overbalancing. Where there are two or more they should be fastened to each other. When steel filing cabinets are aligned in rows, back to back, it has been found that a 1½-inch angle iron fastened on the floor in front of each row will not only keep the cabinets in line but will prevent them from falling forward when drawers are extended.

b. **Alignment.** Cabinets with projecting locking devices should not be aligned with cabinets lacking such devices. Such an arrangement increases the possibility of a worker's striking a projecting corner or locking lever, and serious injury can result. The same hazard exists when cabinets of unequal size are aligned. Cabinets of the same size and style should be aligned.

c. **Open Drawers.** Never leave a file drawer open when it is not being used. Do not have more than one drawer of a file open at one time, since cabinets easily overbalance. The following precautions shall be posted on the top of each filing cabinet:

DO NOT LEAVE DRAWERS OPEN
OPEN ONE DRAWER AT A TIME
USE HANDLE FOR OPENING AND CLOSING

d. **Material on Top.** Do not place heavy material or files of smaller size (such as card-index files) on the tops of file cabinets.

e. **Sharp Edges.** Sharp burrs on metal filing cabinet edges cause injury to hands and other parts of the body as well as damage to clothing. Burrs should be eliminated before cabinets are used.

3. **Desks**

a. **Splinters.** Splinters and loose veneer on desks should be covered or sandpapered before the desk is used.

b. **Creeping.** It is advisable to equip desks and other pieces of furniture with rubber feet to prevent "creeping." This is especially true when desks are placed in close proximity, since in such cases employees often injure their fingers or hands in attempting to realign desks.

c. **Typewriter Desks.** The handle should always be used when closing disappearing typewriter compartments. Because of the weight of the typewriter this section of the desk closes rather rapidly and may cause injury to fingers or hands.

d. **Sharp Objects.** Points of pencils, pens, and other sharp objects should always be laid on the desk with the point away from the person sitting at the desk. When possible, containers should be provided in which to keep sharp objects when not in use. Razor blades should have the cutting edge covered when kept in a desk drawer.

e. **Glass Tops.** Broken glass tops should be disposed of promptly and the desk should not be used until the broken top has been removed. Glass tops made of safety plate glass are strongly recommended.

f. **Protruding Equipment.** Pencil sharpeners and other equipment should not protrude from tops of desks or other furniture.

g. **Open Drawers.** Desk drawers should never be left open, since a person can inadvertently strike or stumble over them and suffer serious injury.

h. **Nonsafety Matches.** The use of "nonsafety" type matches is prohibited by Fire Prevention Regulations.

4. **Chairs**

a. **Swivel Chair Springs.** Weak spring tension adjusting bolts on swivel chairs may break and throw the occupant with considerable force. Bolts should be checked regularly.

b. **Tilted Position.** Personnel should not sit in a tilted position in any chair.

5. **Typewriters**

a. Check typewriter well mechanism on desks regularly to see that connections are secure.

b. Do not have lighted cigarettes or matches in the vicinity when cleaning the typewriter.

c. Do not at any time place typewriters on sliding shelves of desks.

6. **Miscellaneous Office Machines**

a. Before using office machines, be sure they are properly located and not in danger of falling.

b. Never clean or lubricate electrical appliances when they are in operation. When cleaning electrical appliances which are controlled by a switch on the machine, be sure the switch is turned off and the plug pulled.

c. Do not touch any electrical connection with wet hands. Be sure that all electrical equipment is grounded.

d. Protection should be provided against moving parts on addressograph, mimeograph, bookkeeping, tabulating machines, and other types of power-driven office equipment.

e. All electrical office machines, fixed and portable, shall be provided with three-wire (grounded) connecting cords. Ground wires must be connected prior to placing machines in service.

7. **Fans**

a. Each ventilating fan within 7 feet of the floor or on working platforms which are exposed to contact, should be completely covered with wire mesh with openings which will reject a ball 9/16 inch in diameter.

b. Fans should be checked regularly to be sure there are no loose blades or defective guards.

c. Small electric fans should not be placed on boxes or low tables, or in any other position where an individual might catch hands or clothes in the revolving blades.

8. Baskets

a. Personnel shall not put broken glass in wastebaskets. If a tumbler or other piece of glassware has been broken, it is suggested that this material be packed in heavy paper, marked "broken glass," and placed alongside the wastebasket at the end of the day so that the person removing waste paper will not be cut accidentally.

b. Distorted or damaged metal or wire baskets should be repaired or replaced promptly, since sharp edges and points can cause injury.

9. Ladders

a. Small ladders and stands used in some offices shall be equipped with treads of nonslip material and safety feet.

b. Rolling and trolley-type ladders shall be provided with braking attachments.

c. Ladders having broken or split side rails or steps shall be immediately taken out of service.

d. Ladders shall not be painted except with clear lacquer, shellac, or varnish so that defects may be readily seen.

10. Duplicating Machines

a. Toxicity. Spirit duplicating machines should not be used in confined areas, such as small offices, without exhaust ventilation. The spirit fluid used as a solvent in these machines is usually a mixture of ethanol, methanol (methyl alcohol), cellosolve, and other toxic and explosive chemicals. Duplicating machines operated steadily in small rooms should be provided with an enclosing hood over the receiving basket and a canopy type hood is suggested for the receiving tray. Both hoods should be provided with mechanical ventilation designed to give an air flow of at least 100 linear feet per minute through the working openings of the hood. The maximum allowable concentration for methyl alcohol based on an 8 hour per day exposure is 200 ppm. Personnel should be extremely careful to avoid ingestion of this fluid as it is highly toxic when swallowed. Each container of hazardous materials shall be labeled in accordance with the provisions of article.

b. Fire Hazard. Methanol is highly flammable with explosive limits of 6 to 35 percent by volume in air. To put out fires in small quantities of this material, dry chemical, carbon dioxide, or large quantities of water may be used. This material should not be used near an open flame and should be kept in a cool place away from fire hazards.

0205. FIRE PREVENTION

Since fire is one of the greatest and most frequent hazards met in almost any area, fire prevention measures applicable to the various occupations and operations are treated in detail in the various chapters. However, for a full understanding of fire hazards and fire preventive procedures, reference should be made to NAVDOCKS DM-8, *Fire Protection Engineering,* U.S. Navy Fire Prevention Regulations, (Chapter 11 of the *U.S. Navy Structural Fire Fighting Manual,* OPNAV Instruction 11320.15) *and to the standards and publications* of the National Fire Protection Association. In order that personnel may have a general appreciation of fire principles, the following paragraphs explain the principal causes of fire and the fundamentals of fire prevention and extinguishment.

1. Classification of Fires

a. Class A. Class A fires are those involving ordinary combustibles such as wood, cloth, paper and the like.

b. Class B. Class B fires are those involving greases, oils, paints, other flammable petroleum products and flammable liquids in general.

c. Class C. Class C fires are those involving energized electrical equipment.

d. Class D. See 5C(1) below.

2. Cause of Combustion. Three factors are necessary for combustion (1) fuel in the form of vapor; (2) oxygen; and (3) sufficient heat to raise a combustible material to its

ignition temperature. All three of these factors must be present in the same place at the same time in order to have fire. When anything burns, it is not the actual substance which is consumed by the flame, but the vapor of the substance in combination with the oxygen of the air. A piece of wood held in a flame will not catch fire until it has been heated to a point where vapor is given off. Therefore, highly volatile products, such as gasoline, which vaporize at ordinary temperatures and pressures, present a most serious fire hazard.

3. Spontaneous Heating. Because of slow oxidation, heat is produced in certain materials and in combustible materials that contain various oils or greases. (See NFPA *Fire Protection Handbook* for materials subject to spontaneous heating.) If the heat is not dissipated as rapidly as it is generated, the temperature of the material will rise. If this heating is allowed to proceed, the material reaches its ignition temperature and starts to burn. For this reason paint-soaked rags and oily waste must be stored in a way least likely to accelerate oxidation and most likely to cause any heat of oxidation to be absorbed by the surroundings. Use only self-closing metal receptacles for discarding oily waste and dispose of such collections daily.

4. Principles of Extinguishing Fires. In order to extinguish a fire one of the three factors necessary for combustion must be eliminated. This may be done by any one of the following methods:

a. Starving. If the fuel is removed, the fire is extinguished by starving.

b. Smothering. If combustion-supporting oxygen is removed, the fire is extinguished by smothering. The application of foam, carbon dioxide, or dry chemical achieves a smothering effect.

c. Cooling. If heat is removed from a fire, the fire is extinguished by cooling. In ordinary fires this is usually done by the application of water. In oil fires, however, water is not used alone because of the fact that a jet of water disperses the oil and spreads the fire. In an oil fire a water fog nozzle should be used. Water fog will extinguish the fire by combination of cooling and smothering. Solid streams of water should not be applied to electrical equipment since water is a conductor of electricity. Dry powder or carbon dioxide extinguishing agents should be used.

5. Fire-Extinguishing Methods. The subject of fire extinguishers is a highly specialized one, and new methods are being developed constantly. The following paragraphs are meant to give only a summary acquaintance with the principal methods used.

a. Foam Extinguishers. Foam extinguishers are used primarily for oil and gasoline fires. Foam is lighter than the lightest oil products and will float on the surface of the liquid, forming a flexible blanket which cuts off oxygen from the burning oil and extinguishes the flame. The cooling effect of water in the foam also helps to lower the temperature. The foam may be produced mechanically or chemically. Mechanical systems are usually provided where large volumes of foam are required to fight petroleum fires such as may occur aboard aircraft carriers and on air stations. Portable foam extinguishers in capacities of 2½ to 33 gallons employ the chemical principle.

b. Carbon-dioxide Extinguishers. Carbon-dioxide extinguishers are used effectively on oil and electrical fires. When carbon dioxide is released from a pressurized cylinder it is converted from a liquid to a gas. This carbon dioxide gas is heavier than air and extinguishes the fire by displacing and excluding the air and the oxygen contained therein.

(1) Hazards to Personnel. Under circumstances which contribute to the rapid build-up of high concentrations of carbon dioxide in a space (accidental or incidental actuation of an automatic total flooding CO_2 system in a small confined space for example), suffocating atmospheres may occur. Injuries and even fatalities under such conditions may be minimized by employing the following precautions:

(a) Provide adequate exits.

(b) Provide a pre-alarm triggered by the actuation of the CO_2 system and a time delay of up to a maximum of one minute between CO_2 system actuation and the actua initial discharge of CO_2.

(c) Post warning signs and instructions at entrances to and inside such spaces.

(d) Provide detailed instructions for servicing the system and be sure maintenance personnel are thoroughly familiar with the instructions.

(e) Instruct personnel in appropriate emergency rescue procedures and provide readily accessible self-contained breathing apparatus.

(f) Thoroughly ventilate such spaces before permitting entry, recognizing that CO_2 is heavier than air.

c. **Dry Chemical Extinguishers.** Dry chemical extinguishers are of two types: those suitable for use on Class B and C fires and those of the multipurpose type, suitable for use on Class A, B, or C fires. The former are charged with either sodium bicarbonate or potassium bicarbonate. The latter contain ammonium phosphate. Operation of either type extinguisher releases a cloud of finely divided dry chemical which constitutes the extinguishing agent.

(1) **Combustible metals extinguishers.** There is available a class of extinguishers approved for use on combustible metals fires. The hazard of combustible metals is found only to a limited extent in the Shore Establishment. Where the combustible metals hazard exists the requirements of *Navy Aircraft Firefighting and Rescue Manual* NAVAER 00-80R-14, and NFPA *Fire Protection Handbook* Shall apply.

d. **Carbon Tetrachloride Extinguishers.** Carbon tetrachloride extinguishers shall not be used under any circumstances. Carbon tetrachloride fumes in even very small amounts are extremely toxic, and when heated, phosgene and other deadly gases are liberated.

e. **Water Type Extinguishers.** Water type extinguishers are generally preferred for Class A fires. Water (hand) pump and stored pressure water extinguishers are relatively cheap and simple to maintain and they accomplish the most desired effect on Class A fires—cooling. Soda acid type extinguishers are also effective on Class A fires, but they are relatively more expensive and more costly to maintain.

GENERAL HYGIENE

0210. IMPORTANCE

The well-being of workers is maintained by the application of environmental controls and by work habits which eliminate or minimize occupational hazards. Such things as lighting, ventilation, and cleanliness throughout working areas must be maintained at proper levels at all times in order to assure the best possible health as well as high efficiency levels for workers. Safe and healthful working conditions must be maintained in all naval activities and the following general precautions shall be observed.

0211. INDIVIDUAL RESPONSIBILITY

1. **Physical Examination.** Personnel who are subject to exposures hazardous to health shall be given periodic physical examinations in accordance with NCPI 792.

2. **Cooperation.** Although the primary responsibility for many factors of health and safety lies with specially trained persons who are hired for the purpose, all personnel shall be alert to the necessity for constant awareness and practice of precautions and shall cooperate with supervisors and other workers for the maintenance of high health and safety standards.

0212. VENTILATION

1. **General.** Ventilating requirements for any given space are governed by so many variables (density and activity of occupants, nature of work, seasonal temperatures, etc.)

that space does not permit a detailed treatment of the subject. However, in the absence of exceptional heat loads and hazardous atmospheres, the following table can be used for estimating minimum ventilating requirements under various conditions of crowding:

Air Space in Room in Cubic Feet Per Person	*Cubic Feet of Outside Air Per Minute Per Person*
Less than 200	20
201 – 500	15
501 – 1000	10
Over 1000	5

2. **Control of Contaminants.** Whenever materials, substances, or their byproducts which release contaminants are being processed, adequate preventive measures shall be taken to eliminate these contaminants, either at the point of origin or by local exhaust.

a. **Exhaust System.** Exhaust systems shall be so constructed as to provide air velocities recommended for the capture of dust, fumes, smoke, mist, gases, and vapors at the point of operation. Atmospheric contaminants removed by exhaust systems shall be disposed of in such manner that they do not reenter the breathing zone of workers.

b. **Respirators.** In areas where harmful concentrations of atmospheric contaminants cannot be reduced to tolerable limits by ventilation, approved respiratory protective devices shall be provided. Most types for various conditions and contaminants are described in NAVEXOS P-422, *Safety Equipment Manual*.

0213. ILLUMINATION

Good lighting not only decreases the hazard of accidents but also enhances the workmen's health and comfort. It also minimizes sight weaknesses and conserves manpower. The various chapters of this publication deal with individual lighting problems and the following general rules shall apply in all shore activities.

1. **Freedom from Glare.** Adequate lighting shall be maintained at all times in working areas and traversed spaces, and such lighting shall be free from glare caused by exposed bulbs or reflected from highly polished surfaces.

2. **Checking Lighting Conditions.** Checks shall be made periodically on the amount of light, the presence of shadow, and spotty lighting. Provision shall be made for an adequate number of globes and reflectors to prevent glare, and for lamps of proper voltage, wattage, and type for the area.

3. **Cleaning.** Globes and reflectors do not give the proper light when dust and soot are allowed to accumulate. Globes, reflectors, and walls shall be kept clean at all times. Where painted areas are too dark to allow proper reflection, the walls shall be painted in light shades.

4. **Recommended Levels.** Levels of lighting prescribed in NAVDOCKS MO-116, *Building Maintenance–Electrical* and NAVDOCKS DM-4 *Electrical Engineering* shall apply. It must be understood that circumstances may prevent installing lighting systems in full compliance with the above prescribed standards. Before attempting to improve lighting conditions the safety engineer and public works officer should be thoroughly satisfied that improvements are necessary for health, safety, and efficiency.

0214. SIGHT CONSERVATION

A program of sight screening, refraction, and issue of appropriate protective eyewear shall be established and maintained in accordance with the provisions of NCPI 5100.10 and NCPI 792.6.

0215. HEARING CONSERVATION AND NOISE CONTROL

Noise surveys and audiometric examinations shall be conducted and personal protective and noise control methods established in accordance with NCPI 792.5 and Bureau of Medicine and Surgery Instruction 6260.6A, *Hearing Conservation Program*.

0216. PEST CONTROL

1. **General.** With few exceptions pesticides are potentially toxic to human beings and in some cases are flammable or explosive. All persons who mix, store or apply pesticides should have full knowledge of the characteristics, effects, and precautions applicable to the material being used.

2. **Certified Pest Control Personnel.** Pesticides shall be dispersed and other pest control operations shall be performed only by, or under the direct supervision of, personnel trained and certified as prescribed by the District Commandant or Type Commander. Precautions and procedures prescribed in NAVMED P-5010-10, *Insecticide and Dispersal Methods* and NAVDOCKS TP-Pu-2, *Insect and Rodent Control* (to be superseded by NAVDOCKS MO-310 *Military Entomology*) shall apply.

0217. WASH AND LOCKER ROOMS

1. **Lighting**

a. Light fixtures should be so installed that they cast sufficient light in all parts of the room, and the fixtures should be mounted near the ceiling out of reach of personnel.

b. Switches should be so located that persons cannot operate them while in contact with a grounded conductor, such as any part of a water system. Switches should not be located in shower room or where personnel may touch them while bodies are wet.

2. **Heating**

a. Heating appliances shall be protected to preclude the possibility of workers being burned.

b. Salamanders, stoves, or gas heaters must be vented to the outside air, and they shall not be used unless so vented.

3. **Floors.** Slipping and falling when floors are wet is a primary hazard in washrooms. Worn wood floors should be repaired and overlaid with ceramic tile. Worn concrete floors shall be covered with new concrete topping.

4. **Hot Water Heaters.** Heaters for supplying hot water should not be located in washrooms or locker rooms if any other arrangement is possible. If it is necessary to have heaters in the room, care should be taken to prevent the accumulation of unburned gas and carbon monoxide. Flues should be installed to exhaust the gases directly to the outside air.

5. **Soap**

a. **Acidity and Alkalinity.** Liquid or powdered soap dispensed in convenient containers is preferable for use in washrooms, since the concentration of acidity and alkalinity in such soaps can be predetermined. This is of vital importance where employees are exposed to dermatitis hazards. Mineral abrasives, wood-abrasive soap, and high-alkali soap are considered harmful and shall not be used.

b. **Industrial Soap.** Soap used for industrial purposes shall not be used for the hands since such soaps, particularly scouring powders, contain a large amount of sodium carbonate.

c. **Sand or Pumice in Soap.** Soaps containing sand or pumice shall not be used, since these contents are apt to settle in traps and clog the plumbing fixtures.

6. **Showers.** Whenever personnel may be exposed to excessive heat, moisture, dusts, or toxic vapors and liquids, the installation of shower baths is highly recommended. *Showers shall always be installed where workers are exposed to toxic dusts or fumes and to corrosive or irritating materials.* The following precautions shall be observed in the installation and use of showers:

a. **Floors.** Floors and approaches to showers should be of nonslip material such as concrete with an abrasive surface or ceramic tile.

b. **Water Supply.** Each shower shall be provided with hot and cold water faucets so that users may regulate the temperature of the water. A regulating valve or valves should be placed on a side wall where it may be easily reached from outside the stall. Water faucets shall be labeled or otherwise identified.

c. Pipes. Supply lines to the shower baths should be so placed as to avoid the possibility of persons coming in contact with the hot pipes.

7. **Toilet Rooms**

a. Personal Protection

(1) Persons suffering from any communicable disease which may be spread by a common use of toilets shall be barred from the installation until the period of contagion is past.

(2) Expectorating on floors and walls shall not be tolerated.

b. Chemical Closets and Privies. Chemical closets and privies should not be installed except temporarily during construction operations. Disinfectants shall be used as needed.

8. **Lockers.** All employees working with lead compounds or other poisonous or toxic materials should be provided with two lockers—one for street clothes, lunch, etc., and the other for work clothes. Where two lockers are used it is preferable to have the showers and washrooms between the locker for work clothes and the locker for street clothes.

a. Overturning. Lockers should be fastened in position to prevent overturning.

b. Ventilation. Lockers should have good ventilation and should be at least 4 inches off the floor. An exhaust system to suck air through slots in the lockers to the outside of the building is recommended.

c. Tops Clear of Debris. Storage of old clothes and miscellaneous materials on top of lockers is prohibited.

d. Oil-Soaked Clothing. Workmen should not be permitted to keep oil-soaked or badly soiled clothes in lockers, as this practice may cause a serious fire.

FACILITIES

0220. ELECTRICAL INSTALLATIONS

Electrical hazards and precautions in specific situations are discussed in the various chapters of this publication. A general discussion of electricity and electronics will be found in Chapter 15. The few precautions given here are general and apply in most situations.

1. **Care of Equipment and Outlets**

a. New Installations. All electrical installations should be made in compliance with the rules and regulations contained in the National Electrical Code. Electric light pull chains and keyed metal sockets shall be of the insulated type.

b. Grounding. Frames or housing of electrical appliances, coffee makers, tools, office machines, etc., shall be grounded in accordance with Chapter 15.

c. Defective Equipment. Defective electric cords, lighting fixtures, appliances, and switches shall be repaired or removed. Loose outlet plates may result in short circuits and cause shock through contact with them. They shall be reported and repaired.

d. Supervision. There shall be no unauthorized or improperly supervised electrical connections or repairs made in a building.

e. Stumbling Hazards. Protruding power or telephone outlets shall be so located as to obviate stumbling hazards. Extension cords shall be fastened at high levels when it is necessary to use them. They shall never be installed across office floors, aisles, or any walking levels.

2. **Electrical Substation Fencing.** See article 1516.

0221. ELEVATOR SAFETY

1. **Inspections.** Elevators shall be periodically inspected and tested by qualified inspectors in accordance with the standards and precautions specified in NAVDOCKS P-322 *Inspection for Maintenance of Public Works and Public Utilities*. Inspection certificates shall be posted in each elevator car as specified in NAVDOCKS P-322. Elevators that become defective shall be plainly tagged

and shall not be used until repaired and tested. All elevators ashore shall be installed in accordance with the latest issue of *American Standard Safety Code A17.1 for Elevators, Dumb-waiters, and Escalators.*

2. **Carrying Capacity.** In each elevator there shall be posted a card or plate indicating its safe carrying capacity. The safe capacity for passenger elevators shall be expressed in terms of the maximum number of passengers to be carried and for freight elevators in terms of the number of pounds. The rated capacity shall never be exceeded.

3. **Self-Service Elevators.** Self-service elevators shall have operating instructions and emergency procedures clearly outlined and posted inside the car.

4. **Training of Operators.** Only trained persons shall be permitted to operate elevators. Operators shall become familiar with the elevator's emergency devices, understand their functions, and know how to operate them.

5. **Passenger Precautions**

a. **Entering or Leaving Elevator.** Passengers shall guard against tripping when entering or leaving an elevator. No one shall get on or off an elevator while it is in motion.

b. **Authorized Use.** Passengers shall not use freight elevators unless they are authorized for passenger use. Cars not authorized for passenger use shall carry signs to that effect.

c. **Self-Service Elevators.** Persons using self-service elevators shall check to be sure the car is in proper position before entering.

6. **Operating Precautions**

a. **Complete Attention.** Operators shall not converse with passengers except for business purposes and shall not eat or read while on duty.

b. **Keeping Clear.** Operators shall never reach into, or place any part of their bodies within the shaftway. When manipulating the car's controls, they shall be inside the elevator *facing the door.*

c. **Doors and Gates Closed.** Shaftway doors or gates shall always be closed and locked before the car is started. Car gates shall be kept closed while the car is running. Where no gates are provided, passengers shall be kept away from the open edge of the platform. The car shall always be brought to a complete stop at the landing level before the shaftway door or gate is opened.

d. **Opening and Closing Doors.** When the elevator doors are motor-operated or are of the self-closing type, operators shall always extend an arm across the door opening as the doors start to open or close. Operators should keep their hands away from motor-operated doors. When doors or gates are manually operated, they should grasp only the handles provided.

7. **Suspension of Service.** Operators shall never leave the operating mechanism unprotected. When going off duty or when service is suspended for any reason during the ordinary operating hours, an "ELEVATOR NOT WORKING" sign shall be displayed at each landing.

8. **Operating Failures**

a. **Difficulty in Starting and Stopping.** If the car will not start it may be overloaded. Operator shall remove load, and if the operating device still fails to work he shall notify the person in charge. If the car refuses to stop, the operator shall not attempt to jump off. Safety devices and automatic terminal stops will take care of an emergency.

b. **Unexpected Stops.** If the car should stop suddenly between floors, the operator shall call the person in charge and operate the machine only at his direction.

9. **Repairs, Adjustments, and Cleaning**

a. **Out-Of-Order Signs and Barricades.** Prior to beginning repairs, adjustments, or inspections, the car or cars involved should be placed out of service. Doors shall be locked, where possible, and "Out-of-Service" signs posted at each door. Where doors must be left open, suitable barricades shall be erected.

564-350 O - 74 - 3

b. Electric Switch. The service switch of an electric elevator shall always be opened and operating mechanisms locked before any part of the elevator or its operating device is cleaned or oiled. When service is resumed, the operating mechanisms must be in the stop position before the service switch is closed.

c. Assistants Required. Work shall not be carried out by only one person if movement of cars by control from the pit or penthouse is involved. Assistants shall be posted to report movement of cars, to warn persons away from openings, make adjustments, and perform other duties as required.

d. Work in Pit. The car should be securely blocked before any person goes under it, and it should never be moved while anyone is in the pit or on top of the car except as the person in charge may direct.

10. Loading the Freight Elevator

a. Rope-Operated Type. The handrope on a rope-operated elevator shall always be locked before allowing freight to be loaded or unloaded.

b. Hoisting Load. Elevator operators shall always see that the locking device and safe-hoisting attachments are in place before a safe or any other heavy concentrated load is moved on or off the car platform. They shall not attempt to raise the car more than a few inches until the locking device has been withdrawn.

c. Capacity Load. Safes or any other heavy object of a weight close to the capacity of the elevator shall be loaded in the center of the car and operators shall exercise extreme caution in handling such loads. Only the operator shall be allowed on the elevator during such operations.

0222. REFRIGERATION

1. Qualified Workers. Only experienced workmen who are familiar with the nature of refrigerants and the precautions that must be taken with them shall be assigned to such operations as the storage, transportation and transfer of refrigerants from larger to smaller cylinders or to other installations, or to refrigeration, or air conditioning service and maintenance operations.

2. Types of Refrigerants. Refrigerants are likely to be toxic, flammable and/or explosive. Freon refrigerants, while not toxic, will decompose into toxic products if the vapor should come into direct contact with an open flame of high temperature (about 1,000°F.). The nameplate of the compressor unit should be checked to determine the type of refrigerant for which the system is designed.

a. Toxic Refrigerants. The following refrigerants are toxic and they can cause death or serious injury, depending upon concentration and duration of exposure or inhalation:

Sulfur dioxide	Ethyl chloride
Ammonia	Methylene chloride
Methyl formate	Dichloroethylene
Methyl chloride	

All refrigerants, whether toxic or nontoxic, are hazardous to the extent that they can cause suffocation by oxygen deficiency.

b. Flammable and/or Explosive Refrigerants. The following refrigerants are flammable and/or explosive, depending upon the concentration:

Methane	Isobutane
Ethylene	Butane
Ethane	Ethyl chloride
Propane	Methyl formate
Ammonia	Dichloroethylene
Methyl chloride	

(1) Causes of explosions. Explosions that have occurred in refrigerating rooms have been caused by the presence of open flames, exposed electrical conductors and switchboard contacts, introduction of improper gases (particularly oxygen), the presence of air in the refrigeration system and the application of heat to the closed refrigerant system. Oil mist flowing through a nozzle can generate a static spark sufficient to cause an explosion. To guard against such explosions all electrical equipment in refrigeration systems should be adequately

grounded against the creation of static sparks. Heat shall never be applied to any part of the refrigerant system if refrigerant is trapped within. When repairing refrigerant piping or tubing, the refrigerant shall always be purged from the line before applying torch.

(2) Ammonia. When dissociated in the presence of oil, ammonia is susceptible to violent explosions. Therefore great care must be exercised in the handling and use of this refrigerant, and the manufacturer's instructions for charging and purging the ammonia refrigerating system must be followed closely.

(3) Fire extinguishers. Fire extinguishers of an approved type (carbon dioxide) should be provided near the equipment, doorways, or at other readily accessible locations in the area. They should be plainly visible and well marked. Workmen should know their location and be instructed in their use.

3. Detection of Refrigerant Leaks. Leaking refrigerant under pressure can be located by various methods depending upon the refrigerant being used and the means at hand: Procedures used shall be as prescribed in NAVDOCKS MO-115, *Building Maintenance, Air Conditioning and Refrigeration.*

4. Care of Refrigerant Cylinders. Cylinders shall be handled and cared for in accordance with the precautions in Chapter 20.

5. Safety In Refrigeration Plants

a. Protection to Workmen

(1) When opening valves connected to a gage glass the eyes and face shall be protected by goggles or large lens safety spectacles. If refrigerant is released under pressure it can cause painful and dangerous injuries; blindness can result from contact.

(2) No one shall stand in front of the cylinder head of a refrigeration system in line with the piston stroke. If liquid should be drawn into the cylinder, the head might be blown off during a compression stroke; and broken cylinder heads have been known to fly into the air with considerable force.

(3) The moving parts of all refrigeration systems such as belts, gears, couplings and flywheels, should be guarded so as to prevent possible injury to operators and maintenance personnel.

b. Operating Compressors

(1) Be sure that water is flowing through the condensers when the compressor is in operation.

(2) Be sure that the brine is circulating through the coolers on which the compressor is working.

(3) Do not start the compressor until after assuring that the discharge valve is open.

(4) Watch carefully the condenser pressure when starting; this will give warning of any abnormal conditions.

(5) Extreme care must always be exercised by refrigeration machine operators and mechanics to make sure that only the appropriate gas for the particular type of machine is introduced into the system.

(6) When shutting down a compressor for overhaul or servicing, line fuses must be removed to prevent accidental starting which would jeopardize personnel working on or near the compressor.

c. Proper Use of Refrigerant Cylinders

(1) Connecting to system. Refrigerant cylinders shall never be connected to refrigerating system except when the system is being charged or drained.

(2) Filling cylinders. If it becomes necessary to withdraw refrigerant from a system into cylinders, great care shall be taken to avoid overcharging such cylinders. The cylinders should be weighed before and after filling and checked against allowable weights stamped on them. If they are accidentally overfilled the excess should be allowed to escape immediately into a flowing water drain.

d. Inspection of Coils. The brine coils or expansion coil supports of refrigeration systems should be inspected at every defrosting period, or at least once a year, to see that they have not become corroded to an unsafe condition. Failure of

these coil or pipe supports because of corrosion can damage the refrigeration system and seriously injure personnel.

e. Identifying Pipe Lines and Valves. For shore installations, refrigeration piping should be painted in accordance with *Color Code Compressed Gas Cylinders and Piping,* MIL Standard No. 101.

f. Refrigerator Doors

(1) Walk-in refrigerators. Each door, including anteroom doors, if any, on walk-in refrigerators or cold storage rooms shall be equipped with inside door handle or bump bar for releasing the door fasteners or to force the door open from within the refrigerator or cold room. Doors fitted with locks shall be so arranged that the locks can be opened from the inside. Locks independent of inside-opening arrangements shall not be permitted. Appropriate instructions regarding emergency escape procedures shall be posted on the inside of the doors. Instructions shall be printed or painted in luminous colors and on material that withstands dampness and freezing temperatures for reasonable periods of time.

(2) Reach-in refrigerators. Reach-in type refrigerators and freezers which are not in use and are placed in locations accessible to children shall have the doors or latching devices removed.

6. Grounded Walk-in Refrigerators (Advanced Base Type). Persons engaged in the operation and maintenance of advanced base type walk-in refrigerators shall make sure that the power and lighting circuits are grounded in accordance with the following criteria before commencing any work on the unit:

The lighting circuit raceway, receptacles and switch box, exposed metal part of lighting fixtures, refrigerating unit including motor frame, motor starter enclosure and motor switch box and generator neutral and/or building service neutral shall be connected to a permanent ground. All electrical lines to the refrigerator should be checked to assure that they are properly connected and that no condition exists where the conductors contact exposed metal parts of the refrigerator.

7. Protection From Gases and Liquids

a. Use of Gas Masks. Because a toxic refrigerant, when inhaled even in small quantities, is injurious to the lungs, approved gas masks or self-contained breathing apparatus shall always be worn by personnel repairing leaks or purging. These gas masks should be kept in a suitable cabinet immediately outside the machinery room or at some other readily accessible location. The canisters or cartridges of masks shall be renewed immediately after having been used or after the seals have been broken.

b. Use of Cloth or Sponge. In case of emergencies where gas masks are not available, rescue personnel should cover mouth and nostrils with wet cloth or sponge in the presence of ammonia or sulfur dioxide fumes. Those refrigerants are soluble in water. Personnel should keep low to the deck or floor in the presence of ammonia because it is lighter than air. They should avoid low levels and possible gas pockets in the presence of sulfur dioxide, carbon dioxide, freon, and methyl chloride, because those gases are denser or heavier than air.

c. Use of Goggles. The eyes must be protected when working in an atmosphere containing a toxic refrigerant. Chemical goggles of an approved type shall be worn whenever loosening a connection in which *any* refrigerant liquid might be present. The goggles will eliminate the possibility of liquid refrigerant coming in contact with the eyes, and causing possible injury due to freezing moisture in the eyes.

d. Emergency Treatment for Injuries

(1) Exposure to Fumes. If a person has been exposed to toxic fumes, take him into the fresh air and call the medical officer promptly. If breathing has stopped, initiate artificial respiration immediately. When the eyes are affected, hold the eyelids open and flush eyeballs and lids with clean water for 15-20 minutes.

(2) Injury to Skin. If liquid refrigerant comes in contact with the skin, the affected area should be flushed repeatedly

with water. Refrigerant saturated clothing should be stripped from the body, the skin washed with water, and the patient taken immediately to the dispensary.

Chapter 3
MATERIALS HANDLING AND STORAGE

MATERIALS HANDLING

0301. ACCIDENT CAUSES

1. **Kinds.** The largest percentage of accidents suffered by employees in Navy shore activities occur during materials handling operations. Mechanical handling causes fewer accidents, but in most cases they are of greater severity. Hand methods cause more accidents but generally of a minor nature. Careful space planning, proper selection of equipment, and adequate training of employees will reduce the number of injuries due to handling of materials.

2. **References.** Only broad over-all precautions that will lessen the chance of injury will be included in this section. Precautions for the handling and storage of individual materials will be found under the appropriate headings in later chapters of this publication. Detailed procedures for storage may be found in the *Storage and Materials Handling Handbook,* NAVSANDA Publication 284 (NAVMARCORPS Pub 1101) and in *Bureau of Supplies and Accounts Manual,* Volume 2.

0302. PERSONAL PROTECTION

1. **Shoes.** All personnel engaged in materials handling operations shall wear approved safety shoes in accordance with the provisions of NCPI 5100.6-3. Sandals and all types of open-toe shoes or shoes with thin soles shall not be worn.

2. **Leg Guards.** Foot guards and leg guards should be worn by employees working with or handling very heavy objects.

3. **Gloves.** Gloves shall be worn by all employees carrying, lifting or moving sharp or bulky objects that have sharp edges or projecting points. Unless other factors interfere all laborers should wear gloves.

4. **Handling Acids.** When handling acids, caustics, or strong solvents, personnel shall wear suitable approved gloves, rubber aprons, acid-resistant boots, and goggles or face shields.

5. **Cleanliness of Equipment.** All personal protective equipment shall be issued clean and should be cleaned frequently if necessary.

6. **Belts.** When working on high elevations, a life line and safety belt shall be worn unless other adequate precautions have been taken to prevent falling.

7. **Rings.** Finger rings should not be worn by personnel handling stores.

8. **Physical Defects.** Personnel with existing hernias, or who have a history of previous back strains shall not be assigned to duty requiring heavy lifting.

0303. MANUAL HANDLING

1. **Lifting.** All personnel engaged in handling materials of any type should be instructed by their supervisors in, and shall carefully follow, the proper method of lifting heavy objects. The lifter should stand close to the load, with feet solidly placed and slightly apart. With knees bent, he shall grasp the object firmly, and then lift by straightening the legs, keeping the back as nearly vertical as possible.

2. **Lowering Material.** Material shall never be thrown from elevated places to the floor or ground. Suitable lowering equipment shall always be used.

3. **Signals.** Lifting or lowering operations being performed by several persons shall be done on signal from one individual and only after everyone's feet, hands, etc., are in the clear.

4. **Hand Trucks.** Hand trucks and similar devices shall not be so heavily loaded that they cannot be easily handled. When going up or down a ramp or incline, the load shall always be below the worker. Thus, he will pull the load up and push it down.

5. **Drums.** Drums should be rolled by pushing with the hands. Gloves shall be worn when performing this operation.

6. **Sharp Edges.** Before any material is handled, it shall be examined and personnel shall be protected against sharp edges, protruding points, or other factors likely to cause injury.

7. **Straps on Cargo.** Defective or broken strapping on cargo shall be removed, repaired or replaced. When removing steel strapping, face shields or goggles shall be worn and the worker and those in the immediate area should stand to one side and out of the line the strapping will pass when cut.

0304. MECHANICAL HANDLING

1. **Standard Equipment.** Standard equipment shall be used for the handling of materials within naval activities. It shall be kept in good condition and personnel shall be thoroughly trained in its use and in attendant safety precautions.

2. **Mechanical Alterations.** Materials handling equipment is engineered and guaranteed by the manufacturers to perform specified functions. Mechanical alterations to power plants, hydraulic systems, operating levers and controls, lifting and structural members, counterweights, etc., may not be made without the approval of the Bureau of Supplies and Accounts. Requests or recommendations to effect alterations will be addressed to the Bureau of Supplies and Accounts (Storage Division) and will include the following information:

a. Complete details of the proposed alteration including such photographs, blueprints, and engineering data as may be necessary;

b. Reasons for the alteration and improvement expected to result therefrom.

WAREHOUSE STORAGE

0310. FLOOR CAPACITIES

1. **Permissible Weight.** Whether a warehouse is of single or multistory construction, floor load limits must be observed. Floor capacity is commonly stated in pounds per square foot. Usually the floor capacity gives the maximum allowable average weight over each area bounded by four supporting columns or over an entire section, and is not a positive indicator of the maximum weight which may be stacked at any one point. In some cases, however, it is to be regarded as the maximum weight at any one point on the floor. If the exact meaning of the floor capacity as stated is not known, the public works department should be consulted. The load exerted on the floor by a stack of materials is determined by dividing the total weight of the stack by the square foot area it covers on the floor. Such calculations are simplified by regarding the area of the standard pallet as 16 square feet, or 13.5 square feet if a 40- by 48-inch standard pallet is used.

2. **Volume of Combustibles.** Permissible floor loading is also rated on the basis of volume of combustible material. In some cases, therefore, the weight limitation may not be the governing factor. See Bureau of Yards and Docks Technical Publication DM-8, *Fire Prevention and Fire Protection.*

0311. STACKING MATERIALS

1. **Palletized Materials.** All palletized materials shall be so stacked and secured as not to present a hazard when in transit, inside warehouses, between warehouses, in storage, and between warehouses and piers, loading docks, and platforms.

2. **Arrangement.** All material shall be stacked in an orderly manner so as not to present a hazard to personnel or likelihood of damage to material or equipment.

3. **Crushable Containers.** Crushable containers should have vertical supports placed in such a manner that weight of material stored above will not be supported by the containers.

4. **Corner Markings.** Suitable protectors made from either metal, wood, or cardboard shall be placed at corners of material at aisle intersections to prevent damage to material and containers. Such protectors shall be painted brilliant yellow high-lighted by black diagonal striping.

0312. WORKING AISLES

1. **Definition.** Working aisles are those from which material is placed into and removed from storage. They are of two types: transportation aisles, running the length of the building, and cross aisles, running across the building. Determination of the number, width, and location of working aisles is a problem of major importance. Aisles determine bay boundaries and, therefore, limit the space actually used for storage.

2. **Direction.** Aisles should lead directly to doors whenever practicable. With mechanical operation, turning corners slows movement. The greatest number of accidents involving equipment occurs at corners or aisle intersections. When placement of a direct aisle results in considerable loss of space or is otherwise inefficient, the storage officer must weigh the loss of space against slower operation and increased hazards.

3. **Widths Required for Trucks.** The required aisle widths for using the common sizes of fork trucks are:

2,000 pound truck, 10 feet
4,000 pound truck, 12 feet
6,000 pound truck, 14 feet

These are not the minimum aisles in which the trucks can operate. They are considered the minimum for reasonably fast operation and for two-way traffic. All widths stated are figured on the basis of a 48-inch load length. They must be increased slightly if tractors and trailers are used within buildings in conjunction with fork trucks, in order to provide space for the removal of pallet loads from trailers.

0313. FIRE PREVENTION

1. **Accessibility of Fire-Fighting Equipment.** Whenever possible, portable fire-fighting equipment should be placed along operating aisles for easy accessibility. When fire-fighting devices, including water valves and hose outlets, cannot be so placed, a 36-inch fire aisle must give access to them. Such equipment must never be obstructed. Fire aisles should in all cases lead to the nearest working aisle. Instructions of the safety engineer and local fire authorities must be followed.

2. **Clearance of Stacks**

a. **Overhead.** Below automatic sprinkler deflectors the clearance shall be:

(1) stack heights not exceeding 15 feet—18-inch clearance;

(2) stack heights exceeding 15 feet—36-inch clearance;

(3) where hazardous commodities are involved, regardless of stack heights—36-inch clearance.

b. **Walls.** Between stacks and walls, except as otherwise required for materials subject to excessive swelling, the clearance shall be:

(1) exterior walls and standard fire walls—no clear space is required;

(2) substandard fire walls (less than a four-hour rating)—24-inch clearance;

(3) when hazardous materials are stored in general purpose building, clearance shall be 24 inches.

3. **Fire Doors.** Around path of travel of fire doors, there shall be a 24-inch clearance unless a barricade is provided in which case no clearance shall be required. Material will not be stored within 36 inches of fire wall openings.

4. **Storage of Flammables.** Flammable materials, such as paints, oils, grease, gases, and gasoline, are best protected when placed in a special nonflammable building with extra fire-fighting equipment and additional firewalls. Because of lack of such space, however, it may be necessary to store flammables in a general storage warehouse. In this case, precautions will be taken to:

a. use end bays whenever possible;

b. remove and destroy leaky containers;

c. insure proper ventilation for materials which give off flammable or toxic vapors;

d. use only spark-enclosed or spark-proof fork trucks.

MATERIALS HANDLING VEHICLES

0320. GENERAL REQUIREMENTS

1. **Licensed Operators.** Forklift trucks, straddle trucks, and industrial tractors shall be operated only by duly authorized operators who have been qualified and licensed in accordance with Bureau of Supplies and Accounts Publication 284 (NAVMC 1101), *Storage and Materials Handling* Handbook.

2. **Passengers.** Industrial vehicular equipment shall never be used for personal transportation. No workman other than the driver shall ride on any industrial materials handling vehicle unless a permanent seat is provided.

3. **Loads.** The operator is responsible for all cargo being moved by his machine. He shall inspect and secure all questionable loads and shall refuse to transport unsafe or unlawful loads.

4. **Steering Wheel Projections.** No fork truck or other materials handling equipment shall be equipped with a steering knob except those especially designed for one-hand steering and provided with a steering knob by the manufacturer. Extensions to gear-shifting levers will be permitted only when approval has been granted by the Bureau of Supplies and Accounts via the appropriate support authority. Drivers should be especially careful about gripping the steering wheel so that the thumbs are not held tightly inside the wheel since road shock often causes steering wheel to spin violently.

5. **Clear Vision.** All materials handling equipment will be free of cabs, windshields, enclosures, canopies, and any other device which may constitute a safety hazard by obstruction of vision. Side curtains may be placed on straddle trucks provided they do not extend above the top of the cowl and are made of transparent material with only sufficient opaque material to permit fastening. When equipment has an overhead safety guard in accordance with instructions herein, it will be free of any material that may obstruct vision in any direction.

6. **Adjusting Mechanism.** Operators shall not attempt to fix or adjust any mechanical part of any materials handling vehicle unless authorized to do so by their supervisor.

7. **Gasoline-Powered Vehicles.** Gasoline-powered and gas-electric-powered materials handling equipment will be equipped with mufflers, gas fill caps, and metal sediment bowls. They shall have flame arresters when operating in flammable liquid storage areas where it is not feasible to use electric-powered spark-proof or explosion-proof equipment. Fuel shall be dispensed from Underwriters' Laboratory approved containers. All fueling operations shall be done out-of-doors.

8. **Vehicle Unattended.** Operators shall never leave vehicle unattended while the motor is running.

9. **Speed Limit and Care at Exits.** Fork trucks and tractor-trailer trains shall not exceed the speed limit of 7 miles per hour. They shall slow down at all cross aisles and other passageways. When entering or

leaving buildings, warehouses, etc., the operator shall come to a complete stop at entrance, sound horn, and proceed only when the way is clear. These vehicles shall be operated in a safe and prudent manner at all times.

0321. FORK TRUCKS

1. Overhead Safety Guards. Forklift trucks of all types will be equipped with an overhead safety guard fabricated from steel. Exceptions will be permitted only when the overhead safety guard would either increase the overall height of the fork truck or prevent the operator from having freedom of movement. Overhead guards will be capable of withstanding, without evidence of damage, a minimum drop of 5 feet of a wood box or container of 1 cubic foot of volume, weighing 100 pounds. Open spaces between steel bars or tubes will not exceed 6 inches.

2. Load Capacity. The load capacity, and gross weight of each fork truck, shall be stenciled on the machine in plain view of the operator. This capacity shall never be exceeded. Counterweighting of machine to increase lifting capacity is prohibited. Capacity shall be rated at 24 inches from heel of forks. The load capacity of fork extensions shall be computed in accordance with Bureau of Supplies and Accounts Publication NAVSANDA Pub 284 (NAVMC 1101), *Storage and Materials Handling*.

3. Standing Under Loads. No personnel shall ever stand under loads being hoisted or lowered by fork trucks.

4. Facing Forward. Operators shall always face in the direction of travel. All loads shall be carried in such a manner that operator's vision is unobstructed in direction of travel.

5. Ramps and Grades. Fork trucks transporting cargo up ramps or other grades shall be operated with the load up grade; carrying cargo down grade shall be done by backing down grade with the load up grade.

6. Channels Tipped. All loads being transported shall be carried with channels tipped back.

7. Hoisting Personnel. Fork trucks shall be used to hoist personnel only under the following conditions:

a. Supervisor shall authorize all raising and lowering of personnel by fork trucks.

b. Special "personnel pallets" with guard rails on four sides shall be used.

c. During actual raising and lowering operation, all personnel shall face away from mast and keep hands clear of hoisting mechanism.

d. Personnel shall never be transported in an elevated position.

e. Only skilled personnel shall be asked to perform tasks requiring elevation by fork trucks.

8. Lifting Vehicles. Slings or lifting pads shall never be attached to the overhead guards for the purpose of lifting the vehicle.

9. Nonoperating Position. When not in operation, the forks shall be lowered and rested flat on the floor.

10. Bumping Stacks. Stacks shall never be bumped or pushed by fork trucks in an attempt to straighten them.

11. Spacing. In all operations involving more than one fork truck, vehicles shall always remain 20 feet apart unless two vehicles are transporting the same object.

0322. STRADDLE TRUCKS (GANTRY TRUCKS)

1. Inspection. Before commencing daily operations, each straddle truck driver shall thoroughly check vehicle in accordance with standard procedures. All approved guards and safety devices shall be in proper repair and in operation at all times.

2. Blocking up Cargo. All cargo carried by these vehicles shall be blocked up sufficiently to prevent any part of cargo coming in contact with surface over which cargo is being transported.

3. Marking Cargo. Cargo extending beyond lines of straddle truck shall be clearly marked with red danger flags during

daylight hours; at night red lights shall be used.

4. **Sounding Horn.** Straddle trucks operating in the vicinity of personnel shall sound noise-making device.

5. **Public Highway Operation.** Straddle trucks operating on public streets or highways shall be equipped with all safety devices required by State law.

0323. TRACTOR-TRAILER TRAINS (JITNEYS AND TRAILERS)

1. **Traffic Regulations.** Tractor operators shall obey all traffic regulations at times.

2. **Trailer Connections.** Trailers shall be firmly hitched one to the other and to the tractor before beginning operations. These hitches shall be inspected at least four times daily.

3. **Maximum Number of Trailers.** No more than eight trailers shall be used per train while transporting material in dock or shop areas.

Chapter 4
AVIATION

0401. SCOPE

This chapter covers general precautions applicable to the maintenance, repair, and overhaul of aircraft. Specific precautions common to the trades and occupations practiced in other operations will be found in other chapters of this publication.

1. **Ashore Activities.** The contents of this chapter cover general situations pertinent to aviation. Commanding officers will amplify these precautions to suit particular activities, promulgating more detailed instructions where necessary.

2. **Afloat Activities.** Safety precautions pertaining to aviation hazards afloat are not fully covered. Precautions given shall be complied with where applicable. Commanding Officers will issue further instructions applicable to specific ships and types of operations.

3. **In Flight Safety.** The Naval Air Training and Operating Procedures Standardization (NATOPS) program provides complete and detailed guidance on procedures and precautions to be followed when operating Naval aircraft. General guidance may be found in the NATOPS manual, *General Flight and Operating Instructions* (OPNAVINST 3710.7 Series) and the *CVA/CVS NATOPS Manual*. Ground and flight procedures for individual aircraft are contained in the NATOPS flight manuals for each specific aircraft.

0402. GENERAL FIRE PRECAUTIONS

The following precautionary and preventive measures are generally applicable throughout air stations. For precautions applicable to cleaning airplane finishes, fueling, and liquid oxygen operations, see articles 0413, 0416, and 0420 respectively. In addition, the applicable National Fire Codes, National Fire Protection Association (NFPA), are basic references.

1. **Fire Bill.** A local Fire Bill shall be promulgated and practical drills provided to check on adequacy of its provisions and on the training of personnel, particularly the non-professional Crash and Fire Crews.

2. **Lanes.** Lanes suitable for firefighting equipment shall be clearly marked and kept clear.

3. **Smoking.**

a. Smoking or open flames shall not be permitted within 50 feet of parked aircraft, hangars, shops, or other buildings in which highly flammable materials are stored.

b. An adequate number of approved NO SMOKING signs shall be posted in conspicuous places where fire or explosion hazards exist.

c. Special designated smoking rooms or smoking areas may be provided and shall be placarded.

4. **Fuel and Oil Trucks.** Aircraft fuel trucks, whether loaded or empty, shall neither enter nor be stored in hangars or other buildings not designated for the purpose. Aircraft oil trucks shall not normally enter a hangar except during extreme cold or inclement weather and provided adequate fire protection is available.

5. **Open Flames/Ignition Sources.** Open flames or other sources of ignition shall not be permitted in the vicinity of flammable liquids and gases. Continuous fresh air or properly designed exhaust systems shall be provided where flammable vapors may be encountered.

6. **Heating Units.** Open flame or element space heaters shall not be used in any part of a hangar or in any shop where a fire hazard may be created. In no case shall such heaters be permitted in locations where concentrations of flammable or explosive substances are present.

7. **Containers.**

a. Flammable liquid equipment such as safety cans, drip cans, bench cans, portable containers/pumps, cleaning tanks, spray gun holders, swabbing cans, faucets and safety bungs on containers, and storage cabinets shall bear the approval of the Underwriters' Laboratories, Inc. (U/L) or Factory Mutual Laboratories (FM).

b. Drums or other receptacles containing aircraft fuels, oils, dope, paint, or varnish shall be kept only in locations free of sparks, flame, or other sources of ignition. These storage areas shall be placarded with warning and NO SMOKING signs. The applicable *National Fire Code*, NFPA Standard #30, shall be referred to for detailed requirements.

c. Empty flammable liquid containers shall not be stored until they have been thoroughly cleansed of hazardous vapors unless storage is in accordance with the requirements for full containers. The fuel tanks of small gasoline engines shall be similarly cleansed before indoor storage.

8. **Ventilation.** Buildings utilizing aircraft fuel piping and equipment, or where flammable volatile liquids are used, stored, or handled, must provide adequate natural or forced ventilation to prevent vapor concentrations.

9. **Shoes.** Personnel shall wear approved nonsparking shoes in the vicinity of flammable gases and vapors.

10. **Stowage of Combustible Materials.**

a. Covered metal containers shall be provided and used for storing supplies of clean rags, waste, and other combustible materials in immediate use.

b. All used waste, rags, and other combustible material shall be deposited in plainly marked covered metal containers. Self-extinguishing type waste receptacles meeting standards of the Underwriters' Laboratories or Factory Mutual Laboratories are recommended where it is difficult or impractical to maintain covers in place.

c. Containers, approved by Underwriters' or Factory Mutual Laboratories, plainly identified and kept separate from those in b, above, shall be used for oil- and paint-soaked materials.

d. Disposition of these containers shall be made with such frequency and in such a way that they will not become a fire hazard.

0403. HOUSEKEEPING

Good housekeeping in hangars, shops, work docks, and other aircraft maintenance areas is essential to personnel safety, efficient aircraft maintenance and indirectly to flight safety. The highest standards of cleanliness and order should be observed. After any maintenance operation has been completed, the area will be policed and placed in a clean, orderly condition. Decks should be kept free from oil, grease, and debris. Tanks, tools, and equipment shall be properly stored.

1. **Spills.** Oil, grease, fuels, and other slipping substances will be immediately cleaned or covered with approved absorbent materials to remove danger of personnel injury or fire. Drip pans shall be used wherever the possibility of hazardous dripping exists, particularly under engines.

2. **Cords/Hoses.** Air hoses, power cords, and similar equipment should be placed on over-head arms or in a ramped safety trough to alleviate the tripping hazard in aisles and fire lanes. This will also tend to reduce excessive wear and damage to the cords/hoses from traffic. When cords and hoses are not in use, they will be straightened, coiled, and properly stored.

3. **Grounds.** Grounds, particularly around buildings, shall be kept free of fire hazards, such as trash and dried vegetation.

0404. LIGHTING IN HANGARS/SHOPS/ WORK AREAS

Proper lighting is important to personnel safety/health and to flight safety. Flight safety is affected as the quality and quantity of lighting is most important to proper and efficient maintenance and to the removal of tools and FOD from the aircraft on completion of repair work. DOD INSTRUCTION 4270.1 and NAVDOCKS DM-4 specify that the IES *Lighting Handbook*, published by the Illuminating Engineering Society, shall be used as a basic reference in providing proper lighting.

0405. AIRCRAFT CRASH AND RESCUE

1. **Personnel.** Only authorized personnel shall respond to aircraft crash emergencies. Crash crews shall use protective clothing designated for use in fighting aircraft fires.

2. **Traffic.** Crash equipment shall be operated only by fully qualified personnel in accordance with applicable NAVMAT and NAVAIR Instructions in the 11320 series. This equipment shall have the right-of-way over other vehicular traffic, but when traveling on station or public roads such equipment shall proceed with caution and observe traffic rules to the extent compatible with the circumstances encountered. Crash vehicles operating in landing area shall, in general, observe ground rules in force for landing and taxiing aircraft.

3. **Safe Transportation of Crewmen.** Many fatal/serious injuries have occurred as a result of fire/crash truck crewmen falling off of moving trucks due to lack of properly designed riding facilities. Such incidents can also seriously impair mission performance of the crash truck operation. Trucks should be designed or equipped to provide safe transportation of crewmen including such features as compartments or nonskid platforms with proper enclosures or guard rails.

4. **Airborne Weapons (Ordnance).**

a. In the event of fire involving an aircraft with explosive weapons present in the fire area, rescue and firefighting operations shall be discontinued and withdrawal made to a safe distance if the fire is not under control within the time limits specified in Navy Special Weapons Ordnance Pamphlet 20-11 for the weapons listed therein.

b. Aircraft crash firefighting crews shall be thoroughly instructed in fighting fires involving aircraft with live ammunition, missiles or weapons in the fire area.

c. Crash crew personnel shall be kept informed as to whether or not the aircraft is carrying live ammunition, missiles or weapons. Where such are being carried, the types present shall be stated.

5. **Fire Drills**

a. Crash fire crews shall be trained by periodic practice fire drills.

b. Standby fire apparatus shall be manned and ready to operate.

c. Smoking shall be prohibited in the immediate area.

d. All station activities having a crash phone connection shall be notified.

e. Fuel shall be poured on ground or fuselage from an open container. Drums may be emptied by laying on their side and allowing free flow from bungs. Care shall be taken to prevent sparking when handling drums and opening bungs to release fuel.

f. Personnel handling fuel shall be clothed in full firefighting gear.

g. The fire chief or assistant shall be in charge at all times.

h. No loitering shall be permitted in a fuel spill area.

i. Setting fire to fuel spills shall be done only after: all personnel and fuel containers are clear of the fire area; standby fire apparatus is manned and ready to operate; assurance that no low flying aircraft will pass in line of smoke or fire.

j. Spill fires of gasoline or JP-4 shall be ignited by throwing a torch in the spill area or, in the case of large spills, by use of a flare pistol.

0406. DANGER MARKINGS

1. **Airfield.** The following standard markings shall be used for dangerous areas on airfields:

a. Unusable airfield pavement caused by weakened subgrades, poor drainage, overloading, etc., which for some reason cannot be repaired immediately, shall be marked by diagonally painted stripes covering the entire area affected, with a border outlining the area. These stripes shall be 2 feet in width and spaced 5 feet on centers. All marking shall consist of nonreflective yellow paint. Whenever the yellow marking is considered to provide insufficient contrast on light surfaces such as portland cement concrete, the border outlining the striped hazard area may be painted with black traffic paint that meets the accelerated weathering, wear, light, and water resistance test as contained in Federal Specification TT-P-115C. Nontraffic areas such as surfaced runway and taxiway shoulders where required, blast pads at ends of runways, which are not designed to withstand continued aircraft traffic, shall be marked by diagonal stripes in accordance with the above criteria. The striping on surfaced runway shoulders shall border only the end 3,000 feet of the usable runway.

b. All temporary obstructions that encroach on airfield safety clearance surfaces, or hazards to operational aircraft created by any form of airfield construction work, emergency operations, mobile or construction equipment, or lack of maintenance and repair work shall be adequately marked for day and night obstruction identification as follows: Day or night markers displayed on or adjacent to temporary obstructions or hazards shall be located in conspicuous positions so as to retain the general definition and extent of the hazard and shall be recognizable from a distance of at least 1,000 feet during VFR conditions in all directions from which an aircraft is likely to approach the obstruction. All day marking of temporary obstructions or hazards shall consist of square or rectangular marker flags in accordance with one of the following patterns: solid color, aviation surface orange, not less than 2 feet on a side, or a checkerboard pattern of aviation surface orange and white squares, such as the standard international code flag denoting the letter *U*. Any alternate type of flag to be used with a checkerboard pattern shall not be less than 3 feet on a side, with the colored panels approximately 1 foot on a side. The colors of this pattern shall contrast with the background against which they will be seen. Orange and white shall be used where such colors will not merge with the background. All marker flags shall have stiffeners to keep them from drooping in a calm or light wind. Flag stakes shall be of such strength and height that they will support the flags free of the ground, vegetation, or nearby surfaces. Marker flags shall be displayed on top or around the highest edge of the obstruction. When used to mark extensive obstructions or groups of closely spaced obstructions, they shall be displayed at least every 50 feet. Night marking of temporary obstructions or hazards shall consist of battery operated airfield marker lights similar to type GE-1 with red filters. Location of marker lights shall be as specified for flag markers. In areas where primary power is readily available, 25 or 50-watt commercial red lamps of adequate quality, strung by weather-proof sockets on a line marking the boundaries or limits of an obstruction, may be used in lieu of the battery-operated lamps.

c. When a runway or taxiway is permanently closed to aircraft traffic, all markings indicating a usable runway or taxiway shall be obliterated. The method used to obliterate markings shall be determined locally. A large cross shall be painted on the runway or taxiway, 150 ft. from the approach end. The rectangular dimensions of the cross shall be placed on the closed surface on each side and 150 ft. from the usable surface. Runways and taxiways which have been temporarily closed shall be marked in the manner described above, with the following exceptions: existing markings will not be obliterated. The crosses may be con-

structed of any suitable locally available material such as fabric, plywood, or other similar material. The crosses used to denote a temporarily closed runway will normally be positioned over the runway numerals. All crosses shall be painted nonreflective yellow in accordance with Federal Specification TT-P-0085C or TT-G-00490a.

2. **Closed Targets.** In order to give more adequate security to personnel engaged in repairing closed targets, the following system of visual signals shall be used:

a. Closed land target—two yellow strips, 2 feet wide and 200 feet long placed in the shape of an X adjacent to the target;

b. Closed water target—yellow dye placed in the water immediately surrounding the target.

c. Standard red parachute flares should be fired by the repair crew as an emergency signal if a pilot fails to recognize the above visual signals and commences his run on a closed target.

0407. MOVEMENT OF AIRCRAFT

1. **Instructions.** The commanding officer should publish instructions that provide for the following:

a. Training, authorization and control of vehicle operators and aircraft directors.

b. Detailed instructions on the type of aircraft movements required including the number and duties of personnel required for each operation and area speed limits.

c. Avoiding sudden starts and stops. Extreme caution and slow speed shall be exercised when moving an aircraft over a rough or soft surface and into or through a congested area.

2. **Taxiing**

a. **Taxi Signals.** Only approved standard aircraft taxi signals shall be used. Personnel shall be instructed in the use and meaning of these taxi signals. Approved illustrations of these signals shall be posted in appropriate places.

b. **Taxi Pilots.** No one shall be permitted to taxi aircraft except such persons as are authorized to fly it, and those who have been specifically designated by their commanding officer as "taxi pilots," after appropriate check-out.

c. **Obstructions.** When taxiing in the vicinity of obstructions or at close quarters, a man should be attending the taxiing aircraft. Sufficient ground control personnel must be available to provide for the safe taxiing of aircraft in the vicinity of obstructions or other aircraft.

0408. SERVICING AND GROUND TESTING

1. **Static Grounding.** Airplanes shall be securely and effectively connected to a low-resistance ground before any maintenance services are performed.

2. **Airplane Walkways.** Only approved and designated walkways shall be used when it is necessary to work on airplane surfaces.

3. **Tool Kits.** Care should be exercised to prevent tool kits or tools from endangering airplane surfaces or being left inside the aircraft.

4. **Solvents.** The use of aircraft fuel as a solvent or for cleaning engine parts is forbidden. All cleaning operations shall be performed with approved high flash point or nonflammable safety solvents.

5. **Fueling.** No maintenance work of any nature is permitted on an airplane while fueling.

0409. AIRCRAFT TIRE MAINTENANCE

Improper/unsafe procedures on tire maintenance or repair have resulted in many serious/fatal injuries. Personnel performing tire work shall be instructed in proper procedures and safe practices as stipulated in NAVAIR 04-10-506, *MAINTENANCE, STORAGE AND REPAIR INSTRUCTIONS - AIRCRAFT TIRES*. This manual shall be maintained in each tire shop. In addition, pertinent safety regulations in brief form shall be posted.

0410. AIRCRAFT FUEL CELL REPAIR

Fire, explosion, health, and respiratory hazards are present in repairing aircraft fuel

564-350 O - 74 - 4

cells and strict adherence to prescribed safety standards is mandatory. Repairs will be made only by qualified and authorized personnel and then in an area where spark-, ignition- or flame-producing devices are excluded. Electrical equipment and lights (including flashlights) used in the vapor hazard areas shall be approved for use in Class I, Division 1, Group D hazardous areas as defined in the *National Electrical Code* (NFPA No. 70, American National Standards Institute, Inc. (ANSI) Standard C.1). Before attempting any fuel cell repairs, maintenance personnel will familiarize themselves with applicable technical manuals. In addition, supervisors over fuel cell work shall instruct personnel in the safety provisions prescribed in NAVAIRINST 10345.3, "Aircraft Removable External/Internal Fuel Tank; Purging of Flammable Vapors of," and Technical Publication NAVAIR 03.10.513, *SELF-SEALING AND BLADDER TYPE FUEL, OIL, AND WATER-ALCOHOL CELLS.*

0411. AIRCRAFT WORK STANDS

Approved work stands or docks will be provided and used during maintenance operations when access to aircraft is not possible from the ground level. Work stands shall be strongly constructed of non-combustible material. Treads and walking surfaces shall be non-slip. Proper protective railings and toe boards shall be provided on work stands and docks and used to the maximum practicable extent. Applicable technical manuals or manufacturers' instructions shall be complied with on all types of mechanical and hydraulic stands. Checks shall be made to ensure necessary safety pins/devices/wheel locks are in place before use. Electrical apparatus and lights installed on docks which will be used on operations involving use of flammables or exposure to flammable vapors such as spray cleaning, fuel tank work or aircraft cleaning (flammable solvents) shall be approved type for hazardous areas.

1. **Moving and Securing Stands.** Extreme care shall be exercised when moving stands and platforms to prevent overturning or striking aircraft or other equipment. Work stands and related equipment shall be stored in hangars or effectively secured outside to prevent collision with aircraft or support equipment. Proper inspection shall be made that stands are secured so they cannot be moved by wind, propeller wash or jet blast.

2. **Care of Stands/Workdocks.** Periodic inspections shall be made to determine any in need of repair. Defective equipment shall be removed from service until properly repaired.

0412. PASSENGERS ON MOBILE SERVICE/ SUPPORT EQUIPMENT

No riders shall be allowed on fork lifts, tractors, industrial or conventional trucks or other mobile service equipment unless approved safety seat has been installed or approved seating and rails have been installed on the vehicle bed. Personnel will not be allowed in cargo spaces when there is danger of falling, rolling or shifting loads.

0413. AIRCRAFT CLEANING

Hazards are present in many forms when cleaning aircraft. These hazards include: the possibility of falls; fire or explosion when flammable cleaners are used; eye and skin injuries from harmful chemicals such as caustics, acids, phenolic compounds; electrical shock from electrical equipment and injury from pressure equipment and hoses. Supervisors shall carefully review applicable technical manuals so as to take proper safety/fire measures or controls.

1. **Walking on Wings/Fuselage.** If it is absolutely necessary to walk on aircraft wings/fuselage during washing/cleaning locally designed safeguard systems shall be utilized to prevent falls such as surrounding type work docks/platforms with rails or "skylines" to which safety belts can be attached.

2. **Flammable Solvents.** When flammable solvents are used in accordance with technical manuals or applicable directives, supervisors shall take stringent measures for fire prevention and provide proper fire protection

equipment. Applicable *National Fire Codes*, NFPA, shall be observed which include proper grounding, approved flammable liquid handling equipment, prohibition of potential sources of fire or ignition producing devices within 50 feet, and of only explosion-proof lights and electrical apparatus. Such lights and electrical apparatus shall be approved by the Underwriters' Laboratories, Inc. for use in hazardous areas, Classification: Class I, Division 1, Group D.

3. **Protective Clothing.** Supervisors shall require personnel to wear the proper protective apparel depending on the toxicity or caustic properties of the chemicals being used. Protective clothing includes appropriate headgear, eye and face protection, body clothing, foot wear and respiratory equipment.

0414. AUTOMOTIVE EQUIPMENT

1. **Vehicle Marking.** All vehicles regularly used on landing areas, taxiways and aprons shall be painted and marked in accordance with NAVDOCKS P-300, *Management of Transportation Equipment* and OPNAV P44-2 (MCO P11240.46) *Joint Procedures for Management of Administrative Use Motor Vehicles.*

a. **Deployed Marine Units.** The color requirements specified in paragraph 1, above, do not apply to ground support equipment of Fleet Marine Force Aviation Units subject to deployment to forward combat areas where camouflage is required. Such equipments shall carry the checkered flag specified in paragraph b below.

b. **Checkered Flag.** All vehicles not regularly used on the airfield shall carry a flag 3 feet square attached to a staff and flying above the vehicle whenever operations on the airfield are necessary. The flag shall consist of a checkered pattern of international orange and white squares not less than one foot on each side.

2. **Authorized Equipment.** The amount of automotive equipment authorized on flying fields should be reduced to the absolute minimum.

3. **Operating on Airfield.**

a. **Parked Aircraft.** Vehicles should not pass underneath any part of an airplane on the ground. Where such passing is absolutely necessary, the vehicle shall come to a complete stop, and before proceeding, a visual check shall be made to ensure that sufficient clearance exists.

b. **Passengers.** While loading or unloading, passenger-carrying vehicles shall stop only at the boarding entrance and shall be clear of the airplane.

c. **Taxiing Aircraft.** No vehicles shall stand or drive into the path of a taxiing aircraft except the authorized guide or "follow-me" vehicle.

d. **Aircraft Engine Run-up.** No vehicle shall stand, park, or drive in the danger areas of an aircraft while its engines are in operation.

0415. BATTERY AND PLATING SHOPS

The precautions associated with the handling and maintenance of storage batteries are contained in article 1520. The applicable precautions of article 0964 shall apply to plating shops.

0416. PAINTING AND DOPE/FINISHING ROOM PROCEDURES

In addition to the applicable precautions of Chapter 13, the following precautions shall be exercised.

1. **Nitrate Dope.** Nitrate dope and lacquers must be treated and handled as toxic and highly volatile substances. When dry and suspended in air as a dust cloud, the particles present a dangerous flash-fire hazard.

2. **Ventilation.** The ventilation system shall be in operation in the dope/finishing shop during all doping operations and in dope storage spaces during storage of dope/finishing materials and solvents in unsealed containers. Shop doors and windows shall be kept closed while doping so as to allow the thermostatic control to function properly. Ventilation control should be marked in yel-

low and black and placarded "Blower Switch." Applicable *National Fire Codes*, NFPA, shall be observed.

3. **Paint Spraying.** Paint spraying in hangars shall be permitted only when specifically authorized by the commanding officer in a local regulation. Compliance with applicable *National Fire Codes*, NFPA, and ANSI Standards is required.

4. **Health Protection**

a. Paint or dope spraying shall not be allowed in a confined area unless required ventilation and humidity conditions are maintained.

b. Personnel shall wear approved personal protective clothing as provided.

c. Personnel employed in paint or doping operations shall wash thoroughly before eating. The carrying of food into, or eating in the spraying compartment is strictly forbidden because of probable contamination.

d. Approved protective ointments shall be used by personnel whose hands come in contact with various solvents.

5. **Fire Precautions**

a. All work shall be grounded by a flexible cable attached by means of battery clips to the work at one end and to an approved ground connection at the other.

b. No person entering the paint or dope shop shall be allowed to carry on his person matches, lighters, or any material which may cause a spark.

c. Approved nonsparking shoes shall be worn.

d. The use of nonexplosion-proof lights or other ignition producing devices within fifty feet of painting, doping or cleaning with solvents is prohibited. Electrical apparatus, including lights, used in the vicinity of the operations shall meet the *National Electrical Code* for hazardous locations, Class I, Division 1, Group D.

e. Solvents and other flammables in the shop shall not exceed the amount necessary for one working day. Containers in excess of one gallon shall be stowed in approved and placarded areas. Brushes and other containers shall be stored in fire-proof lockers at the end of the working day.

f. Adequate firefighting equipment shall be on hand before painting or doping operations are commenced.

g. Fans, blowers, ducts, and decks shall be cleaned at regular intervals.

h. Dope rooms shall be kept free of all material not required for the immediate operation.

i. The use of metallic scrapers for cleaning concrete floors is prohibited.

0417. ENGINE OPERATIONS

1. **General**

a. Suitable placards and appropriate guards or deflectors shall be provided to prevent accidents with propellers, helicopter tail rotor blades, intake ducts of jet engines, and exhaust ducts of jet and rocket engines.

b. Precautions shall be taken to prevent damage to equipment, or injury to personnel by slipstream, jet blast, or rocket blast.

c. Sufficient time to permit the cooling of jet, ram jet, and rocket engines shall be observed prior to inspection or work on these engines.

d. Protective clothing shall be worn when working with contaminated parts (such as inspections inside jet engines).

e. Propellers on reciprocating engines shall not be pulled through on a warm or hot engine as the engine may kick over and start. If the engine does not cease firing immediately when the mixture control is placed in idle cutoff and the switches turned off, the propeller shall not be subsequently touched until the difficulty has been found and corrected.

f. Due to the low friction in the turbopropeller engines, these propellers will turn freely for a considerable time unless stopped by a braking device. Personnel must be duly instructed in the necessary precautions for servicing this type of engine.

2. **Starting Aircraft**

a. Before starting an engine, the wheels of the aircraft shall be chocked and

the parking brake, if one is installed, set. Where applicable, intake screens shall be installed on jet aircraft. When an engine is started by personnel other than pilots or taxi pilots for testing or warm-up purposes, except VR and VP class multi-engine aircraft equipped with parking brakes, the plane shall be tied down.

b. Whenever an engine is started, personnel with fire extinguishers approved for the purpose shall always be maintained in the immediate vicinity of the engine.

c. Engines shall not be started without a pilot or a competent mechanic having specific authority to start engines in the pilot's seat.

d. Jet engine starting equipment (huffer) shall be positioned so that its exhaust is pointed in a safe direction, also is separated sufficiently to avoid injuries to personnel, excessive heating of ammunition, airborne weapons and fuel tanks, damage to aircraft or to other aircraft support equipment and materials. Positioning, distance and allowable exposure time for loaded weapons shall be in accordance with current directives.

e. Before starting an engine for a high power turn-up, the plane should be well tied down and placed in such a manner that the propeller or jet blast will not cause damage to other aircraft, equipment or property. During any ground run-up, the outside observer shall be stationed in such a location as to be in view of the person at the controls at all times.

f. In starting an aircraft, all challenges and signals between the person operating the starting device or pulling the propeller through and the person at the engine controls shall be clearly understood and so indicated by repetition before action is taken by either person. Where the engines are started entirely from the cockpit, the person at the engine controls shall exchange signals with a person observing the engine from outside the aircraft. In all cases, the propeller must be declared "all clear" prior to starting. Similarly, the rotors of a helicopter shall not be engaged unless the individual in the cockpit is assured by positive signal that the areas swept by the rotors is "all clear."

g. After starting, tie downs and chocks shall not be removed without signal from the aircraft operator.

3. Starting Reciprocating Engines in Helicopters

a. When the engine of a helicopter is started, a qualified helicopter pilot shall be at the controls. Commanding officers may authorize certain specially qualified personnel, other than pilots, to ground test a helicopter when a pilot is not available provided that the helicopter is securely tied down.

b. The rotors of a helicopter shall not be engaged unless the individual at the controls is assured by positive signal that the areas swept by the rotors is *all clear*.

4. **Hearing Conservation.** Noise from aircraft presents a personal injury potential. A hearing conservation program shall be maintained with approved protection and monitoring to be afforded all exposed personnel ashore and afloat in accordance with Bureau of Medicine and Surgery Instruction 6260.6 (Series).

0418. AIRCRAFT FUELS AND FUELING OPERATIONS

1. Fuel Characteristics

a. Current Naval Air Systems Command directives shall be consulted for detailed instructions on specific aircraft fuels and fueling operations. Separate directives are available covering the specific characteristics of JP-4 and JP-5 fuels. Refer to Chapter 20 of this publication for general discussion of the characteristics of hydrocarbon fuels and more detailed precautions.

b. The ignition of vapor from aircraft fuel may occur from static sparks, hot exhaust pipes, lighted cigarettes, electrical devices, and similar sources.

c. Aircraft fuel vapor is heavier than air and will settle to the ground, accumulating in dangerous amounts in depressions, troughs, or pits.

2. Health Hazard

a. Aircraft fuel on the skin should be avoided, as dermatitis and poisoning may result, particularly from leaded gasoline.

b. Inhalation of aircraft fuel may cause unconsciousness and illness.

c. The ingestion or swallowing of aircraft fuels will result in internal injury.

3. Fire Precautions

a. Smoking and other possible sources of ignition shall be prohibited where aircraft fuels or other combustible liquids are stored or handled. Warning signs shall be posted.

b. All accidental spills of aircraft fuels or other combustible liquids shall be immediately removed, protected by washing, covered with a foam blanket to prevent ignition, or neutralized by other means. The fire department shall be notified. Care must be taken that flammable mixtures or vapors do not accumulate in sewers when spilled fuel is washed away. Because of its low vapor pressure, JP-5 fuel will not evaporate when spilled on the deck. The spill is nevertheless a hazard due to the spread of flammable fuel constituents that remain long after fuel spillage. Any heat that raises the temperature of the spillage to 140°F or above causes combustible vapors to rise.

c. If indications of underground leakage of combustible liquids are discovered, areas shall be guarded by appropriate means and the proper fire authorities notified immediately.

d. Whenever possible, aircraft fuel tanks shall be filled, purged, or have an inert gas (such as CO_2), over the gas in the tanks before storing airplanes in hangars, since this leaves no space for explosive vapors to form.

e. Use of leaky tanks or fuel lines shall not be permitted. Repairs shall be made upon discovery, with due regard to the hazards involved.

f. Electrical apparatus including lights and portable equipment in the vicinity of aircraft fuels and fueling operations shall meet the requirements of the *National Electric Code* for hazardous locations, Class I, Division 1, Group D.

g. Many clothing materials such as rayon, nylon, silk, wool and certain plastics will generate static sparks. Fuel transfer personnel should therefore wear "non-static" producing clothing such as cotton. A recommended cotton, flame resistant coverall (explosive munitions handlers) is listed under stock No. 9 D 8415-577-4063 through 4065.

4. Loading Tank/Refueling Trucks.

a. Most tank and refueling trucks are loaded without incident. Nevertheless, loading accidents do occur, frequently accompanied by substantial property losses and unfortunate personnel injuries or fatalities. Many of the tank truck loading accidents are caused by internal sparking during loading of intermediate vapor pressure fuels, such as JP-4, or when distillate fuels are loaded in compartments that previously contained gasoline or other higher vapor pressure products (switch loading).

b. In recent years, higher pumper rates, filters, and cleaner products have intensified the hazard of internal sparking during the loading of distillate fuels into tank trucks. The problem is complex. In order to effect proper precautions, supervisors shall keep current on safe standards, practices, and procedures as promulgated by DOD, U.S. Navy, the National Fire Protection Association, and the American Petroleum Institute. Applicable publications issued by the American Petroleum Institute include: API RP 2003, "Recommended Practice for Protection Against Ignitions arising out of Static, Lightning and Stray Currents"; RP 2013, "Cleaning Tank Vehicles Used for Transportation of Flammable Liquids"; RP 2015, "Cleaning Petroleum Storage Tanks." Additional information is also available in NFPA Standard #385.

c. Supervisors-in-charge of fuel handling operations shall establish procedures for the detection of possible switch loading situations and to ensure that proper and effective safety precautions are taken before the tank truck is loaded; consideration should

be given to procedures that include purging and monitoring with a reliable combustible gas indicator. Supervisors should request technical assistance as necessary from the activity safety engineer/officer and the fire chief.

d. Fuel shall be loaded into tank trucks in accordance with procedures as described in NAVAIR 06-5-502, *Handbook, Aircraft Refueling at Shore Activities*.

5. **Fueling Operations.** In fueling, the same hazards exist and the same safeguards must be taken at airfields in forward areas as taken at continental airfields under normal operating conditions.

a. The commanding officer should publish instructions which provide for:

(1) Training, authorization and control of personnel permitted to perform fueling operations.

(2) Detailed instructions, including the number and duties of personnel required, to perform fueling and defueling operations not prescribed in such detail in the *Handbook, Aircraft Refueling at Shore Activities*, NAVAIR 06-5-502.

b. Fuel trucks having leaky or otherwise defective pumping equipment shall not be used, and shall be so placarded.

c. During the fueling process, smoking, striking matches, or the use of any device producing flame within 50 feet of the aircraft or truck is strictly prohibited.

d. An airplane to be fueled should be on the apron or a dispersal site, and at a distance from such possible ignition sources as blasting, drilling, or welding operations. Consideration will be given to the direction of the wind.

e. The fueler should be positioned at a point as distant from the airplane as the length of hose permits, and preferably to the windward (upwind) side of the plane. If mobile, it must be parked parallel to or heading away from the wing, so that it may be driven away quickly in the event of fire. When fueling has been completed the fueler should be removed from the plane's vicinity. Fueler covers should be kept closed except when a tank is actually being loaded or when pumping fuel at 25°F. or below, because at such temperatures vent valves may be inoperative. The operator must always stay with his equipment while fueling is in process.

6. **Fueling Procedure**

a. Aircraft and refueler shall be properly grounded and bonded by connecting the refueler static cable to the aircraft and the ground. The truck should be inspected to see that the static drag strap (electrostatic discharger) is in contact with the ground. *Handbook of Service Instructions* shall be used as a guide for the grounding, locations and techniques for a specific aircraft.

b. The chief of the ground crew shall check with the plane captain, or other authorized representative of the crew, to ensure that, unless required in the fueling (or defueling) operation or in the quantity gaging system check, no electrical equipment in the aircraft is energized or being worked on, and that no electrical apparatus supplied by outside power (electrical cords, droplights, floodlights, etc.) is in or near the plane. For night refueling, approved explosion-proof flashlights instead of aircraft lights shall be used.

c. After unreeling the fuel hose and before using it, the hose nozzle must be brought in contact with some metal part of the plane remote from the fuel tanks to make doubly sure that no differential in electrical potential exists. In order to reduce the hazard of a static discharge when a plastic coated measuring rod is used during refueling with JP-4, the ground plate around the upper end of the rod shall rest against the top of the filler neck. The rod shall not be removed or reinserted in the tank while refueling. Fuel quantity shall be checked prior to refueling and not more than once during the actual refueling. Repeated insertion and removal of any plastic covered measuring rod during refueling can generate a spark of sufficient energy to ionize a small pocket of fuel-air mixture and cause a low grade explosion.

d. Before removing the tank filler cap, the hose nozzle independent static wire must be attached to a metal part of the aircraft at a safe distance from the filler openings and the tank vents. In some models of aircraft, spring sockets are provided for receiving the ends of the nozzle independent static bond wire that is fitted with plugs for entry in jack sockets on the aircraft.

e. The pressure nozzle is first touched to a bare metal part of the aircraft landing gear and then attached to the fill opening. External bonding wire attachment is not necessary because the pressure nozzle makes a positive bond connection when it is attached to aircraft fitting.

f. A second operator must stand by on the wing or ladder while the clamp is being attached and during the filling operation. He shall be provided with CO_2 hand extinguisher, and a second extinguisher should be readily available.

g. Unless dual fueling equipment and a full complement of trained personnel is available, the filler cap of only one fuel tank at a time shall be removed. It must be replaced immediately after that tank is filled and before removing the cap of any other tank.

h. After filling all of the plane's tanks, the steps outlined above shall be reversed, the "apron" ground wire, if used, being disconnected as the last operation.

7. **Fueling from Stationary Pits.** High speed refueling pits and tactical fuel dispensing systems lend themselves to accelerated refueling of certain type jet and prop jet aircraft through the inflight refueling probe or single point receptacle with the engine(s) at idle and the pilot(s) in the cockpit. Each activity shall promulgate refueling instructions, listing local fire precautions and refueling procedure, prior to, during and subsequent to refueling. The refueling crew duties will be individually specified and implemented for each type or model aircraft to use this accelerated refueling system.

8. **Fueling from Barrels, Drums, or Cans.** In outlying locations, aircraft may be fueled directly from drums, barrels, or cans by emptying the contents of the containers, through filters, into the tanks of the plane. This introduces additional hazards, including an increased vapor release. A second potential ignition hazard may result from failure to properly bond the filter to the fill hose and the plane. Filter material should be carefully examined to insure that it is not a source of contamination. This method of filtering jet fuel does not provide a sufficient level of cleanliness and should not be used unless absolutely no other approved method is available.

9. **Fueling Cabin Tanks**

a. The operation of filling gasoline tanks temporarily installed in plane cabins where the filling must be done on the inside of the plane, is more difficult than the filling of wing tanks and introduces hazards of an extreme nature. During this operation, the cabins must have all possible ventilation.

b. A second operator provided with an extinguisher, should be prepared to act rapidly in the event of fire, and should watch the first operator for symptoms of asphyxiation.

c. An odor of gasoline within a confined space of a plane is a danger signal calling for immediate investigation. All ignition sources must be eliminated until such vapors are removed and the condition corrected.

0419. DEFUELING

Defueling will be done outside the hangar and under controlled conditions similar to those required for fueling. If it is absolutely necessary to defuel an airplane within the hangar, the main doors will be opened and all shop doors leading into the hangar shall be closed. No work will be done in the vicinity of an airplane while it is being defueled, and all ignition sources will be prohibited. Fire protection devices, attended by trained personnel, shall be available. NAVAIR Instruction 11240.2, "Defueling of Aircraft with Mobile Pumping Equipment, Regu-

lations Concerning," and NAVAIR 06-5-502, *"Handbook, Aircraft Refueling at Shore Activities,"* contain detailed regulations on this subject.

0420. LIQUID OXYGEN

Liquid oxygen, often abbreviated as LOX, is a pale blue fluid which flows like water. It boils into gaseous oxygen at minus 297°F; therefore, it is capable of immediately freezing any object that comes in contact with the liquid. Liquid oxygen, when warmed to ambient temperature, expands to about 860 times its liquid volume. Therefore, if a volume of the liquid were confined and allowed to warm, it would exert extremely high pressure (up to 12,000 p.s.i.). Oxygen in liquid form is generally less dangerous than oxygen stored as a high pressure gas. However, because of its extremely low temperature, the property of expansion on gasification and the property of supporting combustion, the following safety precautions must be observed when working with liquid oxygen:

1. **Converting.** When converting liquid oxygen to high pressure oxygen gas, the safety precautions for handling gaseous oxygen as well as liquid oxygen shall apply. (See Chapter 10 and Chapter 20)

2. **Fire Precautions**

a. The work area and equipment shall be kept free of oil, grease or any readily combustible material.

b. Tools and clothing must be free of oil and grease.

c. Smoking, open flames, or sparks shall not be permitted in the liquid oxygen handling area. Any combustion in an oxygen rich atmosphere may be violent.

d. When transferring liquid oxygen, adequate ventilation shall be provided to avoid oxygen rich atmosphere.

e. Liquid oxygen spillage on floor or deck areas should be avoided. In case of accidental spillage, the area should be thoroughly ventilated. Intentional drainage of liquid oxygen must be caught in a clean drain can and allowed to evaporate in an open area.

3. **Freezing Precautions.** The extreme cold of LOX will instantly produce burns if held in contact with the skin. Frostbite or freezing will occur if the skin contacts surfaces that have been cooled by liquid oxygen.

4. **Protective Clothing.** Personnel exposed to accidental spillage of liquid oxygen shall wear the following protective clothing to prevent skin and vision damage because of freezing:

a. Face shield
b. Coveralls
c. Gloves
d. Safety shoes

5. **Handling Precautions**

a. When handling parts of equipment which have been cooled by liquid oxygen, personnel shall wear clean, dry gloves offering insulation to cold. In the event rubber or neoprene is used, there should be a covering glove or an interlining glove worn in conjunction with the molded glove.

b. Do not handle the tubing or fittings through which the liquid oxygen is flowing unless necessary and then only with insulated gloves or other devices for protection against freezing.

c. Do not permit liquid oxygen to flow onto any part of the body, clothes, pockets or cuffs where it might be trapped.

d. In the event the liquid oxygen is spilled on clothing, the clothing should be separated from skin contact immediately and thoroughly aired to allow dilution of the oxygen concentration. When an uninsulated container of liquid oxygen is touched or when there is any reason to suspect some part of the body has been frozen or chilled, the area should be thoroughly washed with clean water and medical treatment should be sought immediately.

e. Handle converters, storage tanks, and transfer hose with care to avoid damage to the insulating space.

6. **Operating Precautions**

a. Liquid oxygen shall not be left in a closed container or trapped in a line between two valves. To avoid excessive

pressure build-up, a valve shall be opened on one end or relief valve cracked open.

b. When transferring LOX, the receiving container must be vented, and should be cooled gradually to prevent thermal shock. Valves shall be opened gradually but completely, then immediately closed ¼ turn; otherwise, they may freeze in the open position.

c. Converters, storage tanks, and transfer hose shall be handled with care to avoid damage to the insulating space.

d. Piping and equipment shall be purged with gaseous oxygen or oil-free nitrogen before and after any repairs. Operating conditions may dictate the necessity of cleaning aircraft system parts with *Cleaning Compound, Oxygen Systems, Specification Mil-C-8638*. Shipboard oxygen systems and oxygen-nitrogen plants should be cleaned in accordance with latest NAVSHIPS instructions.

e. Moisture must not be introduced into the system. Care must be exercised to insure that no moisture is present on filler valves or nozzles where it can get into the system when they are connected.

f. Filling or transfer lines shall be disconnected as soon as the transfer process is completed and cover always replaced on transfer hose nozzle when not in use.

g. Only qualified or authorized personnel being trained and under the supervision of qualified personnel shall operate liquid oxygen equipment.

h. Oxygen shall always be called by its proper name, Oxygen. To further classify its state the terms *liquid oxygen* and *gaseous oxygen* may be used. Never call oxygen *Air*. Do not confuse it with compressed air. Do not lead others to such confusion by careless terminology. Never use oxygen instead of compressed air for any purpose.

i. Gaseous oxygen transfer equipment shall never be used to transfer liquid oxygen or vice versa. Oxygen equipment shall not be used to store or transfer any other gas or liquid.

j. When recharging an aircraft liquid oxygen system the person in charge shall be sure that:

The aircraft is in an open area.

The aircraft is not being fueled.

The aircraft is electrically grounded.

The aircraft electrical system is *"off."*

No APU's or starting units are connected to or operating in the vicinity of the aircraft.

A CO_2 fire extinguisher is immediately available.

Personnel are kept clear of the overboard vent.

Deck under and in immediate vicinity of the overboard vent is free from grease, oil or any combustible material.

7. **Firefighting Precautions.** Refer to *U.S. Navy Aircraft Fire-Fighting and Rescue Manual, NAVAIR 00-80R-14*.

8. **Additional Precautions.** Refer to the manual, *The Handling and Storage of Liquid Propellants*, Office of the Director of Defense Research and Engineering, NAVWEPS OP 3199, and the handbook, *Field Handling of Liquid Oxygen*, Bureau of Naval Weapons.

0421. ORDNANCE

1. General

a. When conducting operations with ammunition, missiles, weapons, explosives, pyrotechnics and the like, involving handling, stowage, loading, transportation, and use, the current applicable publications and instructions shall be consulted and complied with. General (non-detailed) safety precautions in this area are provided in NAVORD OP 3347, *United States Navy Ordnance Safety Precautions*.

b. Areas in which explosives and ammunition are stored, and areas in which operations involving explosive hazards are being conducted, shall be designated in accordance with Ordnance Pamphlet 5 (OP 5).

c. Ordnance materials shall be handled only by authorized personnel.

d. Safety devices provided for ordnance materials shall be used according to instructions.

e. Ammunition, missiles and weapons shall be fired, dropped, or launched only in or from the applicable device, launcher or gun designated for them.

f. Ammunition, missiles and weapons shall be protected from all sources of heat such as fire, sparks, jet exhaust, jet engine starter (huffer) exhaust, etc.

2. **Handling**

a. Handling of ammunition and explosives shall be kept to a minimum and conducted with the utmost care at all times.

b. A red flag shall be prominently displayed near the entrance to any building or location whenever any work connected with explosives or ammunition is in progress to indicate from a distance that personnel and explosives are present. This requirement does not apply to magazines, however a red flag shall be displayed at the entrance to each magazine area when crews are working therein.

3. **Fire Safety.** All measures for the prevention and control of fires shall be taken in areas containing explosives and in areas immediately adjacent to them.

4. **Airborne Weapons Systems.**

a. When loading, arming, dearming or making safe airborne weapons systems aboard aircraft, the safety precautions for the weapon involved shall be observed. These precautions are provided in NATOPS Manuals for each type of aircraft, Aircraft Armament Bulletins, weapons manuals and in check off lists.

b. Insofar as practicable, aircraft with loaded guns, live rockets and forward firing missiles shall be pointed clear of other aircraft, buildings and personnel.

0422. ELECTRICITY AND ELECTRONICS

The following precautions, emphasizing the more hazardous areas of electrical work, shall be considered incomplete in themselves, and personnel working on or near electric and electronic equipment shall be thoroughly familiar with the details of Chapter 15.

1. **Personnel.** Only authorized personnel shall be permitted to install and maintain electrical equipment. Personnel working with electrical circuits will avoid wearing loose clothing, rings, watches, and other jewelry.

2. **Circuit Breakers.** Circuit breakers should not be reengaged until electrical circuit fault is determined and corrected.

3. **Safety Devices.** Switch boards and control panels shall be protected by enclosures or barriers with locking doors. Rubber mats or insulated decks shall be provided at operating locations (see article 1501.3).

4. **Control Switches.** Personnel shall be certain that switches are off before plugging in external power. Before a switch is thrown it must be ascertained that personnel are clear of the equipment.

5. **High Voltages.** When working near high voltage, approved personal protective equipment shall be used. Personnel must exercise caution not to stand on metal, wet decks, or make contact with the frame of the equipment and be constantly observant of power outlets as to rated capacity and radio frequency.

6. **Soldering Irons**

a. Electric soldering irons must not remain connected longer than necessary.

b. Soldering irons must be kept away from flammable material.

c. Hot soldering irons must not be used without proper rest holders.

7. **Flammable Fumes.** A check for presence of flammable fumes shall be made before activating electrical or electronic circuits, or keying transmitters when in an enclosed area.

8. **Electronic Power Supply Circuits.** All power supply filter condensers shall be grounded before work is done on electronic equipment. Grounded shorting prods should be permanently attached to work benches where electronic equipment with cover supply filters is regularly repaired.

9. **High Intensity Radar.** Care must be taken in the vicinity of high intensity electric magnetic radiation systems to prevent injury to personnel and to prevent ignition of combustible material such as volatile gases.

0423. ARRESTING GEAR, BARRIERS, AND BARRICADES

1. **Personnel.** Only qualified personnel shall be permitted to operate or maintain arresting gear, barriers, and barricades. Unauthorized personnel shall be kept clear of the walkways.

2. **General**

a. All arresting engine spaces shall be unlocked during operations.

b. Suitable warning placards will be posted in accordance with arresting gear maintenance instructions for the particular gear in use.

0424. CATAPULTS

1. **Operating Instructions.** Catapults should be operated only under the direct supervision of a qualified catapult officer trained for this work.

2. **General Precautions.** Only qualified personnel should be engaged in these operations. They should have a thorough knowledge of catapult equipment, together with its operation and maintenance, and of aircraft launching procedures.

3. **Safety Placards.** Appropriate placards shall be posted covering the cautions and warnings promulgated in the catapult handbook of the particular equipment being used.

0425. JET ASSISTED TAKE-OFFS

1. **Housing of JATO Boosters**

a. Buildings and compartments housing JATO boosters shall be posted with signs stating the nature of their contents. The current applicable ordnance pamphlets and instructions shall be consulted and complied with.

b. Doors to work rooms and conditioning rooms shall be capable of easy access from either inside or outside the room.

c. Only authorized personnel shall be permitted in the JATO work and storage rooms.

2. **Handling of JATO**

a. Flame proofed clothing should be worn by personnel working with boosters.

b. No drilling or welding shall be done on loaded boosters.

c. Boosters shall be handled as pyrotechnic materials.

3. **Accidental Firing.** In case of accidental firing in a work room or a storage room, all personnel shall leave the building immediately. No one should re-enter the room for 10 minutes.

4. **Pre-Flight Precautions**

a. A thorough check shall be made of the JATO.

b. No electrical appliances shall be used on loaded JATO.

c. Igniter leads shall be shorted at all times during handling and storage.

d. Currents used in making continuity checks shall not be connected to any JATO until the unit is immediately ready for firing or is in the firing position, unless otherwise specifically authorized.

e. An igniter lead shall never be connected before making sure that all JATO switches are off and a dead circuit check has been made with circuit tester.

f. Personnel and equipment shall be kept clear of firing JATO.

0426. STORING AIRCRAFT IN HANGARS/ BUILDINGS DURING STORM ALERTS

Approaching hurricanes/storms demand that aircraft be moved inside to provide proper protection. These emergencies often require the use of all available space. Many of the areas utilized may have open-type motors, generators, lights, switches and similar electrical devices installed. Care shall be exercised to place aircraft in a manner that will minimize the hazard of fuel leaking from aircraft into or near the ignition-producing apparatus. During such storage

any open flames shall be extinguished. Appropriate steps shall be taken to contain and/or prevent the spreading of fuel from known leaks. Design criteria governing construction of new aircraft maintenance hangars specifies the installation of non-ignition producing fixed apparatus such as electrical and heating equipment. NAVFAC DM-28, *Maintenance Facilities*, provides details on proper electrical equipment for hangars, particularly with respect to hazardous locations, Class I, Division 1, Group D of the *National Electric Code*. Adequate measures shall be taken to prevent the introduction into hazardous areas of non-permanent electrically operated equipment, such as food and drink vending machines, which do not comply with applicable NFPA, National Fire Codes.

Chapter 5
LAND TRANSPORTATION

RAILROADS

0501. PERSONNEL

1. Composition of Crews. In Navy railroad operations involving special hazards, the train crew will consist of not less than one locomotive engineer and three trainmen. At the discretion of the commanding officer, a crew of one engineer and two trainmen may be used for operations within the government reservation if due consideration is given to local operating hazards such as terrain, structural obstructions, roadway curves, condition of roadway and equipment, length of drafts, operating in ordnance areas, transporting explosives or other dangerous cargo, and other pertinent factors. If, in the opinion of the commanding officer, after due consideration of the above-listed hazards, a crew of one engineer and one trainman could be used to safely accomplish switching operations involving short drafts of not more than the locomotive plus two cars, a waiver for this type operation may be requested from the support bureau or office. When operating off the reservation, the same crew requirements observed by the local commercial railways shall apply.

2. Restrictions.

a. Limits On Riders. Only operating personnel shall ride railroad equipment except where cars are provided for that purpose and authorization given by the commanding officer or transportation officer.

b. Work Restriction. No person other than a trainman shall couple or uncouple cars.

c. Crossing Tracks. Workmen shall not cross, walk along, or remain upon railroad tracks at any time unless it is necessary for them to do so in their line of duty. At such times the following rules shall be observed:

(1) They shall always look in both directions for approaching trains, engines, or cars before crossing tracks, and step *over* the rails—never on them.

(2) When an area has been especially designated as the proper place for crossing, they shall always cross there.

(3) Crossing, loitering, or standing on tracks close to moving equipment is prohibited.

(4) In crossing, workmen shall keep at least 20 feet from the end of a standing train, engine, or other rolling equipment. They shall never cut through a train under couplers.

3. Boarding and Leaving Moving Equipment. *Accident records show that one out of every four accidents with railroad equipment occurs when men are climbing on or off cars or locomotives.*

a. Prohibition. Boarding or leaving equipment moving at high speed is forbidden.

b. Use of Rear Step. Whenever practicable, get on or off moving equipment from the rear step.

c. Safety in Boarding

(1) Sharp Look-out. Before boarding or leaving equipment, crewmen should look in both directions to avoid contact with structures or obstructions along the side of the track or with equipment on adjacent tracks.

(2) Correct Method. When boarding rolling stock of any description, put the body in motion in the direction in which the equipment is moving and, firmly grasping a convenient grab iron or tread of the side ladder, swing the foot nearest the equipment onto the lowest tread of the ladder.

(3) Station Employees. Trains shall always be brought to a full stop for station employees to board.

d. Safety in Leaving

(1) Standing Equipment. When leaving standing equipment, retain a handhold until a foot is firmly placed to avoid falling, slipping, tripping or turning an ankle.

(2) Moving Equipment. When leaving a moving car, face forward, place the inside foot on the lowest tread of the sill step and grasp a convenient tread of the side ladder; then, when sure of the ground beneath you, let go of the handhold, remove the foot from the sill step and, with the body inclined slightly backward and legs partly flexed, alight on the foot farthest from the equipment, using the other foot to overcome momentum.

4. Going Between Cars

a. When Car is in Motion. Employees shall never go between moving engines or between engines and cars that are in motion.

b. Between or Under Standing Cars. If required to go between or under standing engines or cars to make repairs, inspection, or adjustments, workmen should have an understanding with those controlling the movement of such equipment that full protection has been provided against unexpected movement. Before going between equipment, workmen must always give a hand or lamp stop signal and wait for acknowledgment of the signal and slack adjustment, and they must be assured that the brakes have been properly applied.

c. Need of Keen Observation. Workmen shall look in both directions before going between engines or cars, and, when stepping out from between equipment shall look both ways to avoid being struck by equipment in motion on adjacent tracks.

5. Riding Drop-end Gondola Cars. When required to ride empty drop-end gondola cars, crewmen should assure themselves that the endgate is secured.

6. Cars on Adjacent Tracks. Employees shall not step or jump from a car or engine to another car or engine on an adjacent track.

0502. EQUIPMENT

1. Locomotive Inspection

a. Cars, Cranes, and Shovels. A thorough inspection of all locomotives, locomotive cranes, and shovels in service shall be made daily by a competent person or persons designated by the transportation office, and the defects found shall be corrected before any of this equipment is placed in service.

b. Brakes and Lights. Before equipment is placed in operation, locomotive engineers shall check and test the brakes. Lights shall also be checked prior to night operation; all locomotives, locomotive cranes, and railway cars must have adequate lights, fore and aft.

c. Reporting Defects. Locomotives, locomotive cranes, shovels, and railway cars shall be maintained in a proper and safe condition while in service. All findings of defective equipment of any kind shall be reported in writing at once to the transportation office by the person using the equipment or discovering the defect. Written inspection reports shall be made.

2. General Safety

a. Hand and Footholds. All locomotives, railway cars, and shovels shall be equipped with proper grab irons, steps, and hand and footholds; they shall have railings on deck walks, and suitable running boards at the front and rear.

b. Brakes. All locomotives, locomotive cranes, and railway cars shall be equipped with hand, air, or steam brakes, and with brake rigging. Special care shall be exercised to maintain these devices in an efficient condition.

c. Loose Material. No material of any kind shall be so placed between or near railroad tracks as to present a hazard to anyone or reduce the track clearance.

3. Safety in Storage-Battery Locomotives

a. Switch Shields. An electric-battery locomotive should be provided with a shield which prevents removal of the controller handle except when it is in the "off" position; this assures that the controller

switch cannot be left in contact with one of the resistance points, thereby causing the point to overheat.

b. Inspecting and Servicing. When inspecting, watering, or changing batteries, workmen shall wear rubber gloves and acid-proof goggles.

4. Safety in Internal-Combustion Locomotives. Internal-combustion (gasoline or diesel-electric) locomotives shall be equipped with self-starters and have explosion-proof lights and switches at their fueling stations.

5. Safety in Diesel-Electric Locomotives

a. Occupants of Engine Room or Cab. Only authorized persons shall be permitted in the engine room or cab of any locomotive.

b. Rules for Personnel

(1) Clothing. When working around diesel engines, personnel should always wear snugly fitting clothing to avoid creating a hazard near the moving machinery.

(2) Wearing of Rings and Wrist Watches. No work shall be performed on any electrical equipment by anyone wearing a ring, wrist watch, or other metal article.

(3) Vee Belts. Workmen shall not install or adjust any Vee belts while the equipment is running.

c. Generation of High Voltage. Diesel-electric locomotives, being fundamentally electric and not mechanical sources of power, are capable of developing electrical charges far greater than those encountered on steam locomotives. If contacted by personnel these charges can prove fatal, since the main generator's normal operating voltage in these engines varies from 500 to 1,000 volts of direct current and the voltage during transitions or sudden reversals may reach as much as 3,000 volts for brief periods. Personnel not authorized to work on this equipment *must keep off while the power is on or when the locomotive is moving.*

d. Replacing a Fuse. If a fuse blows, the operator shall not change it unless he can do so safely. The engine should not be operating when electrical equipment is being serviced. See Chapter 15, article 1517.

e. Removing Grease and Oil. Grease and oil on the floor of diesel locomotives should be cleaned up immediately. Operators should wipe these engines off frequently with a clean, lintless, dry cloth, since accumulations of dirt and grease around the wiring can cause flash-overs of current. Never use waste in the engine room or on any part of the locomotive; there is always the possibility that small particles of waste will find their way into the lubricating oil lines and clog them.

0503. FIRE PREVENTION

1. General Precautions

a. Emergency Equipment. Each crewman should know the location of fire extinguishers and first-aid kits and any gear which might be necessary in an emergency.

b. Use of Flammables in Cleaning Engine. Personnel shall never use gasoline or other flammable liquids to clean engines in operation, or to wipe the engine while it is running; some of the liquid might be trapped in the engine, diluting the lubricating oil, or the fumes might cause an explosion within the crankcase when the engine is started.

c. Drawing Fire From Locomotives. Firemen shall always draw fire from locomotives at a specially designated spot, making certain that the locomotive is not at that time in close proximity to flammable liquids, gasoline storage tanks, wooden buildings, or any other flammable materials or equipment.

d. Access to Hydrants and Fire Plugs. At no time shall transportation appliances be left standing or material placed at crossings in such a way as to obstruct the passage of fire apparatus to any hydrant or fire plug.

2. Precautions with Explosives

a. Explosives in the Yards. When explosives are present in railroad yards, the yards shall be considered to be explosive areas, to which all the general safety precautions regarding smoking, fire, and placarding apply. Because of the hazard inherent in large quantities of explosives, positive and effective fire protection measures shall be strictly observed.

b. Disposal of Sweepings. When blasting powder or other explosives have been unloaded from a railroad car, the floor

564-350 O - 74 - 5

of the car shall be carefully swept immediately after the unloading and the sweepings poured into water and disposed of safely.

3. **Preventing Fires in Storage-Battery Locomotives.** In addition to taking the general precautions against fire when inspecting, watering, or charging batteries in storage-battery locomotives, personnel shall be prohibited from smoking or having any open flame in the vicinity.

4. **Preventing Fires in Internal-Combustion Locomotives**

a. **Bonding and Grounding.** When fuel for internal-combustion locomotives is being transferred, fuel tanks shall be bonded and grounded (see article 2017). At all other times fuel openings shall be kept closed.

b. **Fire-Extinguishing Equipment.** Internal-combustion locomotives shall be equipped with fire-fighting appliances of the type approved for use in class B and class C fires.

5. **Preventing Fires in Diesel Locomotives.** For fire prevention in diesel locomotives see article 2015.

0504. SIGNALS

1. **Personnel Involved.** Through the use of lookouts and signals, every precaution shall be taken by train and engine crews, and by locomotive crane and shovel operators, to prevent injury to persons in the crew or in the yard.

2. **Use of Standard Signals.** The standard signals used on major railroad lines shall be used. When naval railroad equipment operates on mainline tracks it must comply with any special safety regulations of the private road with regard to lookouts and signals.

3. **Vigilance in Obeying Signals.** Enginemen should keep a constant and vigilant lookout for signals, and should observe closely the position of the switches affecting their movement. They shall never move equipment unless signals are in view. The disappearance from view of a signal is an indication for moving equipment to stop immediately. An engineman receiving a stop signal must stop immediately, regardless of who gives the signal.

4. **The Blue Loading Signal**

a. **Purpose.** When workmen are loading or unloading a car or cars in such a manner that a movement of the equipment might result in injury to other workmen, the supervisor in charge of the men shall place, at least 50 feet in front of the car at the open end of the railway spur, a standard railway blue flag and, in addition, a blue light by night, as a warning to train crews or others making a coupling.

b. **Obeying the Signal.** Locomotives, locomotive cranes, or other rolling equipment must not enter upon the track which has a blue flag attached to it. When a locomotive is run on a track adjacent to one displaying a blue flag everyone concerned shall take extreme care to insure the safety of the men working there.

c. **Removal of Signals.** Blue flags or lights *shall not be removed by anyone except the supervisor who placed them there,* and he shall not remove them until the danger of injury to persons or the damage to property is no longer present.

5. **Crossing Signals.** Crossings shall be safeguarded by the use of gates, bells, watchmen, flagmen, lights, or standard signs. At highway crossings outside the activity, the safeguards to be used should be determined by consultation and agreement with the responsible local, state, or Federal authorities. If watchmen are stationed at such crossings or at dangerous crossings in congested areas within the activity, they shall be instructed explicitly concerning the unusual hazards there, supplied with all necessary information (such as special trains using these tracks), and provided with timetables showing the arrival time of scheduled trains.

a. **Use of the Engine Bell.** The engine bell must always be rung when the engine is about to move, while the engine is approaching and passing over crossings, and while passing cars and other equipment on adjacent tracks.

b. **Right-of-Way.** Ordinarily, railroad

transportation equipment shall have the right-of-way over motor vehicles at street and road crossings. In congested areas or at dangerous crossings within the activity, a flagman carrying an unfurled red flag shall proceed ahead of the train to protect vehicular and pedestrain traffic except where gates, watchmen, flashing signals, or other higher type protection is provided. At "blind" street intersections within the activity, locomotives, locomotive cranes, and railroad cars must be brought to a full stop.

6. **Switchmen's Hand Signals**

a. In switching operations, the engineman shall not move the equipment without receiving a clearly-read signal from the switchman.

b. Switchmen must give hand signals on the engineman's side whenever practicable. At points where there are close clearances, and switchmen find it necessary to work on the firemen's side of the train, the fireman will receive the signals and communicate them to the engineman.

7. **Emergency Signals**

a. **The Red Signal.** The display of a red flag or red light indicates danger, and no one shall pass such a flag or light until it is safe to do so.

b. **Fire.** When a fire signal sounds every reasonable effort must be made to clear crossings and building entrances and to keep them open until the all-clear signal has sounded.

c. **Accidents.** In cases of wrecks, derailments, and similar accidents, flagmen shall proceed along the track in both directions for a sufficient distance to stop trains running at their usual operating speeds, and shall place flags and torpedoes (by day), or fuzees and torpedoes (by night), to warn oncoming trains in sufficient time for them to stop.

0505. OPERATING PRECAUTIONS

1. **Mainline Operations.** Naval railroad equipment operating on trackage owned by private railroad companies whose operations are governed by the United States Interstate Commerce Commission or the Public Utilities Commission of any State or Territory must conform to regulations of the regulatory body having jurisdiction.

2. **Shifting and Switching**

a. **Removing Material from Cars.** When shifting equipment at buildings, brakemen shall see that transfer plates, gangplanks, pallets, skids, wheel chocks, and any other material have been removed before coupling and moving cars.

b. **Securing Loads.** Crewmen should take care that all material on open cars is properly and securely loaded to prevent it from shifting or falling. When opening or closing car doors, keep fingers clear of the edge or jamb of the door, rail, or casing by which the door travels, and keep the body clear of the opening made by the door to avoid injury from fingers being caught or material falling.

c. **Stretching Drafts.** All drafts must be stretched, to insure proper coupling, before being moved in either direction by a locomotive.

d. **Cutting Air Hose.** All air hose must be cut by hand before cars are switched.

e. **Maximum Speed at Night.** A speed of 5 miles per hour shall not be exceeded when cars are being shifted at night.

f. **Danger from Flying Switches.** Flying switches are dangerous to persons and property; all locomotives shall be brought to a full stop before the cars are cut loose.

g. **Ground Lever Switches**

(1) Operating. When operating a ground lever switch a worker must keep all parts of his body clear of the line of lever travel. To avoid being struck by the lever or ball, the fingers and thumb should be under the lever when releasing it from its keeper. Similarly, when operating a ball switch, the hands and feet must be kept in a position where they will not be struck by the lever or ball.

(2) Returning to Normal Position. All switches must be returned to their normal running track position after movements over them have been completed.

3. **Operating Hand Brakes**

a. Braking Unattached Cars in Motion. When a box car or similar rolling stock not connected to a locomotive is being moved, a man should always be stationed on the equipment to operate the hand brake.

b. To Secure a Standing Car. When it is necessary to stop cars by the use of hand brakes, the brakes should be checked to be sure they are in good working order before cutting off the cars. All cars left standing must be secured with hand brakes or a similar locking device.

c. Proper Position When Operating a Brake. When operating a hand brake, crewmen should always take the proper position on the car, as indicated by the type of brake to be operated. They should be sure they have firm foot and handholds to prevent slipping, falling, or experiencing a sprain or strain from losing their hold, footing, or balance. While applying the brakes they should put pressure on the wheel steadily (never with a jerk), especially when going from a light to a heavy pressure. Using any part of an adjoining car for a footrest when applying or releasing the brake is prohibited.

d. Makeshift Hand Brakes. A makeshift hand brake, such as is made by converting a pick handle into a brake, shall never be used. Such a stick is often of inferior material and is liable to break under pressure.

4. **Making Couplings**

a. Position of Feet. When a coupling is being made or equipment is being moved brakemen shall not stand or ride with one foot on the engine or car and the other on the ground, or ride between cars or between the engine and a car with one foot on one car or the engine and the other foot on the adjoining equipment.

b. Coupling on a Curve. Cars shall never be coupled on a curve.

c. Link-and-Pin Couplings. When making link-and-pin couplings, brakemen shall use a hardwood stick to steer the link into position; they shall never use their unaided hands. The stick must be long enough to reach the link without subjecting their legs or hands to the danger of being crushed.

d. Placing the Pin. Brakemen must wait for the cars to stop before dropping the pin into place.

0506. UNLOADING RAILROAD CARS

1. **Clearance.** When freight is received by a freight car there shall be proper clearance between sidings, fixed poles, stanchions, and appurtenances. Clearly visible "NO CLEARANCE" signs shall be posted where necessary.

2. **Car "Spotting."** A railroad car shall be correctly and accurately spotted. If it is necessary to spot cars by hand, a standard car mover shall be employed, but before using a car mover be sure that everyone is in the clear.

3. **Use of the Blue Flag.** Proper warning signals and signs shall be posted when personnel are working in or unloading a freight car, and a blue flag or sign shall be posted at least 50 feet in front of the car at the open end of the railroad spur. Switchmen are not permitted to remove blue flags or lights. See article 0504, 4c.

4. **Securing the Car.** Before unloading a railroad car, crewmen shall make sure that the brakes are set and the wheels blocked, and that the gangplanks are held firmly in place. A track chock or rail clamp shall be used when explosives are being unloaded.

5. **Placing of Unloading Devices.** Unloading platforms, gangplanks or roller conveyors of sufficient strength to support the material to be transported, shall be placed and securely fastened so that they cannot slip.

6. **Safety Wrenches.** Crewmen shall use safety wrenches to open drop-bottom cars.

7. **Marking of Trafficways.** Trafficways to buildings and storage areas shall be defined and clearly marked. They shall be designed to minimize cross-flow traffic and to avoid blind turns and corners.

0507. SHOP SAFETY

1. **Personal Protective Equipment**

a. Goggles and Gloves. Goggles shall be worn at all times where there is any pos-

sibility of flying particles striking the eyes. Gloves as well as goggles shall be worn when chipping, grinding, reaming, welding, or riveting.

b. Shoes. Safety shoes should be worn to avoid foot and toe injuries.

c. Protective Clothing in Diesel Shops. Workers in filter-cleaning rooms of diesel shops shall wear protective clothing of the following types as specified in the *Safety Equipment Manual,* NAVEXOS P-422:

(1) moulded rubber splash-proof goggles, to protect the eyes against strong caustic solutions

(2) rubber gloves

(3) waterproof protective pads for arms and shoulders

(4) a waterproof apron

(5) safety shoes with heavy leather soles

2. **Safety at Work**

a. Riding on Moving Equipment. Shop workers shall not catch rides on moving cars and engines.

b. Boarding or Leaving. Workmen in engine repair shops shall always observe this important rule: *to board or leave an engine for any purpose, always face the engine;* then if slipping should occur, it is not likely to result in a serious injury.

c. Getting Off Equipment. When getting off railroad equipment, ladders, or platforms, mechanics should always look before stepping down, and should retain a handhold until the foot is firmly placed to avoid falling, slipping, tripping, or turning of ankle.

d. Protection While Repairing Brakes. When starting to work on the brakes of an engine, the mechanic should first "cut off the air;" this will protect him from serious hand or finger injury should someone set the air while he is working.

e. Steam in the Roundhouse. Workmen must never walk "blind" about the roundhouse or locomotive shed. When they cannot see through a cloud of steam they should stop and wait until the view becomes clear.

f. Avoidance of Strain. Workmen shall never attempt to lift very heavy equipment; they should either get help or use a hoist.

g. Obtaining First Aid. First aid shall always be obtained promptly if a cut or other injury is sustained.

3. **Housekeeping**

a. Ventilation. Adequate ventilation shall be provided in engine repair shops to prevent the accumulation of carbon monoxide and other noxious gases when engines are inside the buildings.

b. Cleanliness. Cleanliness in engine repair shops is essential for accident prevention. Shop floors, corridors, ladders, catwalks, and passageways must be kept clear of loose material, trash, oil, and grease.

c. Disposition of Combustibles. Special receptacles with self-closing lids shall be provided for such combustible material as greasy rags and waste. The contents of these receptacles shall be burned as often as is practical.

d. Disposition of Scrap. Scrap material shall be placed at once in scrap tubs and taken frequently to scrap bins.

e. Avoiding Tripping Hazards. Tools, material and parts, hose and cable, etc. shall not be left lying where personnel may trip over them. They should be returned to their proper places after being used.

4. **Warning Signs in Shops.** When locomotives are undergoing repairs, suitable warning signs as suggested below shall be prominently displayed on controls or in the vicinity of engine houses, cabs, cabinets, track ends, etc.:

DANGER–DO NOT MOVE

DANGER–MEN WORKING UNDERNEATH

DO NOT OPEN–MEN WORKING

NO SMOKING

NO SMOKING BETWEEN SIGNS

DO NOT START THIS ENGINE

STOP UNITS BEFORE MAKING REPAIRS IN THIS CABINET

DO NOT USE WASTE FOR CLEANING–USE RAGS

5. **Proper Use of Equipment**

a. **Safety Benches.** Safety benches shall be used at the rear of a locomotive when the tender is disconnected and shall be used along the side of a steam locomotive when men are working there. Such benches can be either prefabricated wooden benches, horse scaffolds, or tubular staging.

b. **Handling of Tools.** The precautions for proper handling of portable tools will be found in Chapter 14.

c. **Lifting of Jacks**

(1) Selection of Proper Jack. Mechanics should always select the proper size of jack for the load to be lifted. A jack of too light capacity can strip itself, releasing the load; and a jack of too little height will run itself out before accomplishing the purpose intended.

(2) Inspection. The jack should be inspected before use; if there is any doubt about its condition, it should not be used.

(3) Seating the Jack. The jack should be placed on a firm footing, where it cannot slip or kick away from the load to be lifted. Welders working between gondolas or other types of railroad cars shall make sure that, if jacks have been placed at either or both ends of cars, they are firmly placed, with no possibility of tipping over.

(4) Blocking. Jacks should be blocked after each hitch. Use the right size of wood blocking between the top of the jack and the load to be lifted, using a wedge, if necessary, to keep the jack at a right angle to the lift point to prevent tipping.

(5) Placement of Trestles. After jacking up a car, locomotive, or tender, safety blocks or trestles should immediately be placed under the truck or car body. Workmen shall never go under or work on such equipment when it is not protected by trestles or safety blocks.

6. **Working on Turntables**

a. **Pit Equipment.** Pits shall be equipped with vapor-proof lights and shall have steps or ladders at each end. The entire pit shall be enclosed by removable safety rails.

b. **Entering the Pits.** No one shall enter a turntable pit without first locking the turntable controls.

c. **Engines on Turntables.**

(1) When Engine is Attended. No engine shall be operated while on the turntable, nor shall personnel jump from turntable, before the signal is given by the turntable operator. Any workman authorized to move an engine or any self-propelled unit within an engine house shall be held personally responsible for knowing positively that there is no person beneath the engine or self-propelled unit who might be injured by the operation of the throttle, change of position of the reverse lever, or operation of the brakes or injectors.

(2) When Engine is Unattended. When the unit is left unattended, the engines shall be shut off and the brakes applied. In addition, the wheels shall be blocked with suitable blocks or chain where conditions require such extra precautions.

7. **Crossing Pits.** Workmen shall always walk around pits, instead of jumping or stepping across them.

MOTOR VEHICLES

0510. DEFINITIONS.

As referred to in this section, the following definitions will apply:

1. **Motor Vehicle.** A mechanically propelled conveyance, not operated on rails, by which any person or property may be transported upon a roadway.

2. **Emergency Vehicle.** Vehicles identified and authorized for use in accident prevention, protection, security, crash and rescue work, and those designated for emergency public works service.

3. **Truck.** A motor vehicle designed for the transportation of property.

4. **Truck Tractor.** A motor vehicle designed for drawing other vehicles and not so constructed as to carry a load other than a part of the weight of the vehicle and load so drawn.

5. **Trailer.** A vehicle without motive power designed for carrying persons or property and for being drawn by a motor vehicle.

0511. OPERATOR'S QUALIFICATIONS AND REQUIREMENTS

1. **Responsibility.** The operator of a Navy or Marine Corps motor vehicle shall be responsible for the safe operation of the vehicle while it is assigned to him, and for the safety of his passengers and cargo. Should a passenger refuse to cooperate with the safety instructions of the activity, the operator shall not move the vehicle but shall immediately report the incident to the nearest appropriate authority.

2. **Operator's Permit.** No person, military or civilian, shall be permitted to drive a Government vehicle until such person has been examined and issued a permit in accordance with *Navy Civilian Personnel Instruction* 5100.9. Strict adherence to NCPI requirements concerning records and accident reports is required.

3. **Inspection and Maintenance of Vehicles.** Motor vehicles shall be maintained in a safe condition and no operator shall be permitted or required to operate a vehicle known to be unsafe. Operators of Navy or Marine Corps motor vehicles shall make the daily and weekly inspection or maintenance of the items listed on DD Form 1358, *Vehicle and Equipment Operational Record.* Inspection findings and recommendations should be reported in the space provided, before, during, and after operation.

4. **Compliance with Local Ordinances.** Motor vehicle operators must obey all local traffic laws and ordinances, use and observe the hand signals authorized for turning and stopping, and comply with all traffic signs and signals. It is not intended that the rules given in the following articles shall conflict with any local laws or ordinances. In case of such conflict, the local law or ordinance will prevail. In countries where driving on the left side of the road is customary and legal, these rules shall be adapted to said custom or law.

5. **Hours of Work.** Except in extreme emergencies, where no relief is available, drivers of motor vehicles shall not be required to perform driving duties for long periods, because they may cease to be mentally alert and physically capable of driving safely. Drivers should not be required to perform driving duties, except for short hauls, following a full day of fatiguing work.

6. **Physical Fitness.** No operator whose alertness is impaired by fatigue, illness, alcohol, drugs, or who is otherwise physically unfit shall drive a Government vehicle. If an operator is on the road and feels that he is becoming fatigued or drowsy, he shall pull off the road and stop for a few minutes of rest.

7. **Courtesy.** Motor vehicle operators are expected to practice "courtesy of the road" at all times toward drivers of other vehicles and toward pedestrians.

0512. BASIC RULES ON THE ROAD

1. **Speed Regulations**

a. **Local Speed Limits.** No motor vehicle shall be driven at a speed greater than the maximum limit allowable in the area or posted on the roadway.

b. **Reckless Driving.** No motor vehicle shall be driven recklessly or in such a manner as to endanger life, limb, or property.

c. **Reducing Speed.** No motor vehicle shall be driven at a speed greater than is reasonable and prudent, giving due regard to the type of vehicle, visibility, traffic, or any other existing condition or circumstance, such as:

(1) approaching and crossing an intersection or railway grade crossing;

(2) approaching a drawbridge or lift bridge;

(3) approaching and going around a curve;

(4) approaching a hill crest;

(5) traveling in any narrow, winding roadway;

(6) driving on a wet pavement, over snow or ice, or through rain, snow, fog, mist, dust, or smoke.

d. Minimum Speeds. No motor vehicle shall be driven at a speed so slow as to impede or block the normal, reasonable movement of traffic, except when reduced speed is necessary for safe operation.

2. Correct Lane. A motor vehicle shall be driven as nearly as practicable entirely within the right-hand lane and shall not be shifted from that lane until the driver can accomplish the move with safety. Driving may be shifted to another lane under the following conditions:

(1) when overtaking and passing another vehicle proceeding in the same direction;

(2) when the right half of the roadway is closed to traffic because of construction or repairs;

(3) when a roadway is marked for one-way traffic;

(4) when the roadway is divided into three or four lanes and marked for traffic under the rules applicable thereon;

(5) when preparing for a left turn at an intersection, a private road, or a driveway.

3. Safe Following Distance. The operator of a motor vehicle shall not follow another vehicle more closely than is reasonable and prudent, having due regard for the relative speeds of the vehicles, the amount of traffic, the conditions of the highway, visibility, and type of vehicle directly ahead. When following fire apparatus responding to an alarm or other emergency vehicles, automotive traffic shall keep at least 500 feet to the rear of such vehicles.

4. Turning. Right turns shall be made from positions as close as practicable to the extreme right of highways. Left turns shall be made from positions as close as practicable to the center lines of highways. Preliminary to making turns, vehicles shall be driven into the proper lane well in advance and the proper signal given at least 50 feet prior to executing the turn.

5. Overtaking and Meeting Vehicles

a. Maintaining Safe Clearance. When overtaking another vehicle proceeding in the same direction, an operator shall pass to the left of that vehicle and at a safe distance from it. He shall pass only when sure that the roadway ahead is clearly visible and free of oncoming traffic for a distance sufficient to ensure safe completion of the passing. He shall not return to the right side of the roadway until safely clear of the vehicle passed, but must at the same time be back in his own lane before coming within 100 feet of any vehicles approaching from the opposite direction.

b. Procedure for Operator of Overtaken Vehicle. Except when overtaking and passing on the right is permitted, the operator of an overtaken vehicle shall, upon audible signal, give way to the right and shall not increase the speed of his vehicle until completely passed by the vehicle approaching from behind.

c. Overtaking at Night

(1) Lights. When following or approaching within 500 feet of a vehicle proceeding in the same direction, the headlights shall be switched to low beam.

(2) Signal when Passing. When ready to pass a vehicle at night, drivers shall flash their headlights as a signal to the vehicle ahead. If the way is clear, the vehicle ahead should return the flash as a signal to pass.

(3) Signal when Overtaken. When overtaken by a vehicle at night, upon a flash from the overtaking vehicle's headlights, an operator shall return the flash if the way is clear, then permit the overtaking vehicle to pass.

d. When Passing is Prohibited. Passing on the left is prohibited in the following situations:

(1) When approaching the crest of a grade or a curve in the highway where the operator's view is obstructed to such a distance as to create a hazard in the event that another vehicle is approaching; or

(2) when the view is obstructed within 100 feet of any grade, crossing, bridge, viaduct, or tunnel.

e. Overtaking on the Right. Passing on the right is permissible *only when State and local laws permit* and then only under the following conditions:

(1) when the road is clear and passing can take place without driving off the highway or incurring danger of any kind;

(2) when the highway is of sufficient width that there are two or more lanes for moving traffic in each direction; or

(3) when the vehicle is on a one-way street or highway of at least two lanes and there are no obstructions.

f. Passing Standing Streetcar or Bus. Unless protected by safety zones, a standing streetcar or bus taking on or discharging passengers should not be overtaken and passed on the right.

g. Meeting Other Vehicles. When meeting other vehicles, operators shall keep their vehicles to the right-hand side of the road. In addition, the following precautions shall be taken in the specific situations given:

(1) Meeting Other Vehicles at Night. When driving with headlights on, beams must be depressed when meeting other vehicles.

(2) Overtaking or Meeting a Standing School Bus. Upon meeting or overtaking from either direction, a school bus which has stopped for the purpose of receiving or discharging school children, a driver shall stop his vehicle before reaching the bus and shall not proceed until the bus resumes its motion or until signaled ahead by the driver. Local ordinances regarding meeting and overtaking school buses shall be observed.

6. Right-of-Way

a. At Intersections. When approaching an intersection the operator shall reduce the speed of his vehicle and be prepared to stop and shall observe the following rules as to right-of-way:

(1) When approaching an intersection he shall yield the right-of-way to a vehicle which has already entered the intersection from a different highway.

(2) When a motor vehicle is entering an intersection at approximately the same time as a vehicle from a different highway, the vehicle on the left shall yield to the vehicle on the right.

(3) The operator of a motor vehicle about to enter or cross a highway from a roadway leading from a naval activity or private driveway shall yield the right-of-way to all vehicles approaching on the highway.

b. On Approach of an Emergency Vehicle. Upon the approach of an authorized emergency vehicle (fire department truck, ambulance, police or military patrol) giving warning by sirens or bells or by at least one lighted red light, the operator of a motor vehicle shall yield the right-of-way, drive immediately to a position parallel and as close as possible to the right of the roadway, clear of any intersection, and remain there until the emergency vehicle has passed.

7. Backing and Maneuvering. The operator of a motor vehicle shall make certain that the way is clear before backing or maneuvering.

8. Stopping and Parking Motor Vehicles

a. Slowing to a Stop. Operators should always stop their vehicles slowly. A quick stop may injure a passenger, move the load, or cause a crash with a vehicle immediately behind.

b. Parking on a Roadway. The operator of any motor vehicle upon any highway outside of a business or residential district shall not stop such vehicle, park it, or leave it standing, whether attended or unattended, upon the paved or traveled part of the highway, when it is practicable to stop such vehicle, park it, or leave it elsewhere; and, in any case, an unobstructed width of the highway opposite a standing vehicle shall be left for the free passage of other vehicles, and a clear view of the stopped vehicles shall be available from a distance of 200 feet in each direction upon the highway. These regulations are not binding in cases of disabled vehicles. See article 0513.1.

c. Stopping on a Grade. When parking on a grade an operator, in addition to effectively setting the brake, shall place the vehicle in low gear or put the selector in the

"park" position. In addition, if he is parking downgrade he shall turn the front wheels sharply toward the right side of the highway, and if he is parking upgrade he shall turn the front wheels to the left. Thus the vehicle will be stopped by the curb or will turn off the highway in the event that it rolls while unattended.

d. Securing a Parked Vehicle. The operator in charge of a motor vehicle shall not leave his vehicle unattended without first stopping the engine, locking the ignition, removing the key, and effectively setting the brake. As additional precaution the vehicle should be placed in low gear or the selector in "park" position.

9. Railroad Crossings. On approaching railroad crossings, vehicles transporting passengers or dangerous cargo as defined by ICC regulations shall stop within 50 feet but not less than 10 feet of the nearest rail and after ascertaining that it is safe to do so may proceed.

10. Traffic Control. Traffic control devices for streets and highways on all activities of the Naval Shore Establishment shall be in accordance with the *Manual on Uniform Traffic Control Devices,* and changes thereto, published by the Public Roads Administration (approved by American Standards Association, ASA D6.1). On activities operated in foreign countries such traffic control devices shall comply with standards of the country involved.

0513. EMERGENCY AND SAFETY EQUIPMENT

1. Signals Used During Emergency Stops. Whenever any motor vehicle is disabled upon the traveled portion of any highway or the shoulder thereof, outside any municipality, at any time when lighted lamps are required on vehicles, the operator of such vehicle shall display warning devices upon the highway during the time the vehicle is so disabled. Motor trucks, buses, or truck-tractors shall carry at all times two red flags not less than 12 inches square and equipped with standards to be used as daylight warnings. Any such vehicle operating from one-half hour after sunset to one-half hour before sunrise shall also carry three red electric lanterns or three red reflector flares, three pot torches, and three fusees. (Fusees are required only if pot torches are used.) When such vehicles carry flammable liquids in bulk, compressed flammable gas, explosives, or any other highly flammable cargo, only the required electric lanterns or reflector flares shall be carried in addition to the flags. The equipment shall be used as follows:

a. Pot Torches and Fusees. In the event that pot torches and fusees are provided as warning equipment, a lighted fusee shall immediately be placed on the roadway at the traffic side of the vehicle. Within the period the fusee is burning or as promptly as possible thereafter three pot torches shall be placed on the roadway, as follows: one each at a distance of not less than 100 feet (40 paces) or more than 300 feet in advance and to the rear of the vehicle (each in the center of the lane of traffic occupied by the disabled vehicle), and a third at the traffic side of the vehicle, approximately 10 feet to the rear or ahead thereof.

b. Reflector Flares and Electric Lanterns. Whenever the disabled vehicle is equipped with electric lanterns or reflector flares, one electric lantern or reflector flare shall immediately be placed on the roadway at the traffic side of the vehicle, and two electric lanterns or two reflector flares shall be placed to the front and rear of the vehicle in the same manner as heretofore described for pot torches.

c. Red Flags. Whenever any motor truck, bus, tractor, trailer, semitrailer, or pole trailer is disabled upon the traveled portion of a highway or the shoulder thereof outside any municipality, at any time when the display of flares, electric lanterns, or reflector flares is not required, the driver of such vehicle shall display two red flags upon the lane of traffic occupied by the disabled vehicle, one at a distance of not less than 100 feet (40 paces) or more than 300 feet in advance of the vehicle, and the other

not less than 100 feet or more than 300 feet to its rear.

2. **Skid Chains.** The responsibility for using or not using skid chains rests entirely upon the operator. Chains add to traction in starting and stopping in heavy snow, soft ice, and mud; but, even with chains, reduced speeds and additional care are necessary in slippery weather. Chains should be put on when they will give added traction and safety, and removed when clear pavement is reached.

3. **Fire Extinguishers.** Operators shall become familiar with the operation of fire extinguisher equipment carried by motor vehicles. (See article 0517.3c).

4. **Seat Belts.** Provisions for the installation of safety seat belts are contained in NAVDOCKS P-300, *Management of Transportation Equipment*.

a. **Factory Installed.** Beginning with Fiscal Year 1965, procurement requests for automotive vehicles will specify that anchor bolts and seat belts be installed by the vehicle manufacturers as follows:

(1) Two sets each for front and rear seats in:

sedans
station wagons (6 passenger)
trucks, pickup, 4-door cab

(2) Two sets each in

ambulances
trucks, pickup
trucks, panel (3800 GVW through 7000 GVW)

(3) Two sets for each of the three seat rows in:

station wagons (8 - 9 passenger)
trucks, carryalls

0514. SPECIAL PRECAUTIONS

1. **Precautions with Gears and Brakes**

a. When a vehicle is proceeding down grade its clutch should not be disengaged. On steep grades forward movement should be retarded by placing the vehicle in second or low gear, depending on the steepness of the slope.

b. Vehicle operators shall never proceed down a steep incline or on ice with the overdrive engaged.

c. Never apply the brake suddenly or forcibly when traveling over slippery pavement.

2. **Towing Vehicles**

a. **Use of Tow Truck.** Except in emergencies only such Navy-owned motor vehicles as are especially designed for the purpose shall be used for towing or pushing another vehicle.

b. **Use of Rigid Connection.** A towbar or similar rigid connection should be used for towing.

c. **Blocking and Uncoupling.** Both vehicles must be completely stopped before they are uncoupled, and if necessary the wheels should be blocked. No one shall be allowed to go between the vehicles to uncouple them until it is certain both vehicles are securely stopped.

3. **Fueling Vehicles.** In addition to the instructions contained in article 0525, the following precautions shall be taken when a motor vehicle is being fueled:

a. No fueling shall be done within a closed building.

b. During fueling the operator and passengers shall not smoke or light a match or lighter for any reason and there shall be no open flame in the vicinity.

c. Operators shall turn off engine and vehicle lights while taking on fuel.

0515. SPECIAL TYPES OF VEHICLES

1. **Buses.** The following rules for the operation of buses are supplementary to those applying to all motor vehicles:

a. **General Precautions**

(1) Only operators with satisfactory records of safe driving shall be assigned to drive buses.

(2) Operators must be trained to stop, start, and operate buses smoothly and without jerks or sudden changes in acceleration.

(3) Operators must not start or operate buses with the doors open.

(4) Operators must not close the doors of buses until passengers are fully inside and off the steps.

(5) When making a turn or upon approaching a sharp curve, operators must reduce speed and use care to avoid injuring passengers.

(6) The bus operator shall give his attention to the road when driving and shall not carry on unnecessary conversation with the passengers while the vehicle is in motion.

(7) Operators of fare-charging buses shall not make change while the bus is in motion.

b. School Buses. The driver of a school bus is required to exercise all precautions listed above in addition to the following special precautions:

(1) Speed. No school bus shall be driven at a speed greater than that authorized by the laws of the State in which the vehicle is being operated. When children are on the bus the speed shall be not more than 45 miles per hour.

(2) Orderly Conduct. Passengers shall be under the authority of and directly responsible to the operator of the bus, and the operator shall be held responsible for the orderly conduct of the pupils for their safety.

(3) Regular Stops. Pick up or discharge of any passenger except at regular stops designated by commanding officers or their representatives is prohibited.

(4) Crossing Street. Whenever a school bus stops to discharge passengers who must cross the street or highway in order to reach their destination, such passengers must cross in front of the bus, except when laws regulating local traffic prohibit this. In any case, the bus shall not be started until passengers desiring to cross have done so.

(5) Escorting Children. The operator of a school bus shall not permit pupils to cross a street or highway until they can do so safely, and he shall, if necessary, secure the bus, dismount, and act as their escort.

c. Semi-Trailer Buses. The following precautions shall apply to operation of semi-trailer buses:

(1) Passengers

(a) Standing in moving vehicles is prohibited except where handholds or straps are provided for each standee.

(b) No passenger shall be permitted to ride on running boards or with arms or legs extended outside the vehicle, or seated on fenders, top of cab, cab shields, or in door wells.

(c) No passenger shall be permitted to get on or off while the vehicle is in motion.

(2) Exit-Entrance

(a) Exit-entrances on semi-trailer buses without doors should be equipped with a heavy gage safety chain across the opening 36 inches above floor level. Chains should be attached by a secure latching arrangement which will permit easy latching and unlatching.

(b) The following signs shall be posted at or near the inside of exit–entrances of semi-trailer buses not equipped with doors:

"SITTING OR STANDING ON STEPS OR IN DOOR WELLS IS PROHIBITED"

"SAFETY CHAIN MUST BE LATCHED WHILE BUS IS IN MOTION"

2. Ambulances. Operators of ambulances shall follow the general safety rules for motor vehicle operators in addition to the rules in this article. See also article 1603.

a. Authorized Use. Ambulances shall be used only for the transportation of the sick, injured, or wounded, and such personnel as are required to attend them.

b. Emergency Runs. Emergency runs shall be restricted insofar as practicable. Only commanding officers, their representatives, or duty officers may authorize emergency runs or prescribe the circumstances under which they may be ordered. Each emergency run shall be fully recorded in the duty log of the medical department having local control.

c. Instruction of Operators. The transportation officer shall make certain that ambulance operators are thoroughly conversant with local traffic regulations and local geography.

d. Speed Limits. A limiting speed shall be set for each ambulance, for any and all circumstances, according to local traffic regulations and conditions applicable to operation of "emergency type" vehicle.

e. Stop Lights. No operator of an ambulance shall proceed through a red light stop signal or a fixed stop sign except in cases of extreme emergency, and then only after slowing down and determining that it is safe to continue.

3. Motor Fire Apparatus. Engineers and drivers of structural fire-fighting motor apparatus shall observe the following safety precautions:

a. Authorized Riders No person other than a member of the fire department shall be permitted to ride on fire apparatus, except when authorized to do so by the fire chief.

b. Warning Devices

(1) Red lights and sirens shall be used as emergency warning signals in responding to alarms.

(2) Sirens on motor vehicles shall not be sounded except when responding to an alarm.

c. Speed

(1) Motor fire apparatus shall be driven at a safe speed under all conditions. The speed shall not exceed the posted station, local or state speed limits except as permitted by station regulations or local or state exceptions which have been approved by Command. The equipment shall never be operated at a speed in excess of that recommended by the manufacturer, and shall further be limited to a maximum of 35 miles per hour in industrial, residential or other areas of a like nature, and/or where personnel are riding in a "hanging-on" or standing position.

(2) Fire apparatus shall be slowed down, and brought to a stop if necessary, before crossing dangerous intersections or crossing streets against red traffic lights.

d. Parking at the Scene of Fire. Fire apparatus shall not be parked or left standing at the scene of alarms in such a manner as to unduly obstruct traffic, and free flow of traffic shall be established as soon as possible.

e. Returning to Fire Station

(1) Motor fire apparatus, when returning from an alarm of fire, shall be driven as nonemergency equipment and the drivers shall abide by all traffic regulations of the station, and of state and local traffic laws when off the station.

(2) When fire apparatus is being backed, whether into the fire station or at any other time except in an emergency, a man must stand on the rear platform or to the side and rear of apparatus to safely guide the driver.

4. Trucks and Trailers

a. Checking Equipment Before Operating. No trucking equipment shall be operated unless it is in good repair and all safety devices are in proper working condition. Hood fasteners, brakes, brake fluid, headlights, horn, windshield wiper, king pins, breakaway brakes, etc., shall be inspected and repaired. All tires on dual wheels shall be matched as to size, weight, load capacity, and air pressure. Trucks and tractors equipped with air brakes shall not be operated unless the motor is running and the air pressure is at least 60 pounds. Trucks that operate during hours of darkness shall be equipped with proper headlights, taillights, and running lights.

b. Loading

(1) Maximum Size of Load. No motor vehicle shall be loaded beyond its rated capacity. Further, the load shall not obscure the operator's view ahead or to either side, or in any way interfere with safe operation. Where loads overhanging the sides of vehicles are transported within a shore activity, special precautions shall be taken to prevent collision between the overhang of the load and another vehicle. Minimum precautions shall consist of walking flagmen or escort vehicles. Where overhanging loads are to be transported over the public highway, clearance shall first be obtained from local civil authorities and if a civil police escort is not provided for the vehicle the activity

shall provide an adequate escort. Movement of overweight or oversized loads or equipment shall be accomplished in accordance with instructions in NAVDOCKS P-300, *Management of Transportation Equipment*.

(2) Distributing the Load. Heavy loads must be properly distributed. Incorrect distribution may overload individual tires or axles even though the weight of the load is within the rated capacity of the vehicle.

(3) Securing the Load. The securing of materials transported over public streets and highways by truck, semi-trailer, full trailer and pole trailer shall be in accordance with the instructions of NAVSANDA PUB 284 (NAVMC 1101), paragraph 4.5.18.

(4) Warning Signs. A motor vehicle carrying a load which projects more than 4 feet beyond the rear of the vehicle shall display at night, or whenever visibility is reduced, a red light at or near the end of the projecting material. At other times, a red flag not less than 12 inches square should be displayed in place of a red light.

(5) Loading a Dump Truck. When loading a dump truck with a power shovel, clamshell, or other type of bucket, the driver should leave the driver's seat and remain out of reach of the dipper or bucket until the truck has been loaded, unless the dump body is provided with a shield adequate to protect the driver from bucket spills. When loading any truck, using a hook or in any situations where the bucket or boom must pass over the cab in loading, the driver should dismount and stand clear.

(6) Hauling of Heavy Loads. No vehicle hauling an unusually heavy load over a highway or within a municipality shall be moved until the operator has been advised of the correct weight of the vehicle and load, and given specific instructions as to the route which he is to follow (one which has previously been chosen as safe and legal).

c. Towing

(1) Safety Chains or Cables. No truck or tractor shall pull or tow a draw-bar type trailer or non-self-propelled equipment over highways, roadways, or streets, unless the towing and towed vehicles are coupled together with at least one safety chain or cable in addition to the trailer tongue or draw-bar of the towed vehicle. The chain or cable shall be so connected to the towed and towing vehicles and to the tow-bar as to prevent the tow-bar from dropping to the ground in the event the tow-bar or its connections fail. The means of attachment to both the towing and towed vehicles shall be capable of withstanding the ultimate strength of each safety chain or cable. Each chain or cable shall have an ultimate strength at least equal to the combined weight of the cargo and trailer being towed. Every full trailer and every dolly used to convert a semi-trailer to a full trailer shall be equipped with a chain or cable, provided with a thimble, ring or other suitable means for attaching it to the towing vehicle. Attachments for the safety chain or cable shall be mounted in the vertical plane of the longitudinal centerlines of the tow-bar, towed and towing vehicles. This precaution does not preclude the use of double chains when the situation warrants. When the situation warrants use of double chains, no more slack shall be left in the safety chains than is necessary to permit proper turning. (This precaution is not intended to include materials handling trailers as shown in Figures 31, 32, 33, and 35 of publication NAVSANDA-284 (NAVMC 1101)).

(2) Air Brakes. Trucks or tractors equipped with air brakes shall tow only trailers equipped with air brakes. Coupling of vacuum brake unit to air brake unit is strictly prohibited.

(3) Air Connections. No truck or tractor shall pull or tow any trailer until proper air connections are established between the two units.

5. **Dempster–Dumpster**

a. **Operating Precautions.** The following operating precautions will be posted in the cabs of all hoisting trucks handling bottom-dump, Dempster-Dumpster trash containers:

(1) Dumping. The operator shall not permit any other person to be on the truck or near the rear of the truck during the dumping operation.

(2) One-Man Operation. No person other than the operator shall hook or unhook chains or perform any other operation pertaining to the hoisting, loading, or dumping operation. The hoist truck is designed to load, dump, and unload all containers as a one-man operation. If the operator cannot perform these operations *unaided,* he shall proceed immediately to the maintenance shop and report the circumstances.

(3) Removal of Lodged Material. Each truck shall carry a long-handled implement to dislodge any material which remains in the container after dumping. No person other than the operator shall use such implement at the dumping ground. If any material cannot be readily dislodged by the operator, he shall hoist the container and take the truck to the maintenance shop where mechanics shall free the material, using jacks, props, or auxiliary hoists as necessary, to prevent uncontrolled closing of the container.

(4) Mechanical Failure of Equipment. An operator shall not attempt to use expedient methods to hoist, load, or dump a container when any malfunction occurs. Instead, he shall take it to the maintenance shop, if possible; if not, leave the container and report the circumstances.

(5) Entering Container When Off the Ground. No person shall be permitted to insert any part of his body into a container when it is off the ground. Each container shall carry a sign reading: WARNING–STAY CLEAR AT ALL TIMES WHEN CONTAINER IS OFF THE GROUND.

b. **Maintenance**

(1) Hoisting Mechanism. Hoisting mechanisms shall be inspected in accordance with Naval Facilities Engineering Command maintenance schedule to ensure that:

(a) Hoist arms are parallel under load;

(b) Lift chains are straight, the same length under load, and with no defective links;

(c) The hydraulic system is tight, the moving parts in proper alignment, and that there are no loose parts;

(d) The hook and spring assembly is clean, and free of rust, dirt, oil and grease. This assembly does not require lubrication. Hook springs shall be replaced when found to exert less than 30 pounds pressure on the hook in the engaged position. When hook points become worn or flattened, they shall be built up by welding;

(e) The hoist will load, hook, and dump, unhook, and lower a fully loaded container solely by means of the operating controls in the cab.

(2) Bails. Bails on trash containers shall be inspected before each use. If bails are found to be bent toward the containers more than one-quarter inch, or are excessively deformed in any manner, they shall be straightened or replaced. Particular attention should be given to the welds attaching the bails to the container.

(3) Lifting Trunnions. Lifting trunnions in each end of all containers shall be inspected in accordance with Naval Facilities Engineering Command to determine that they are securely welded and properly aligned.

c. **Modifications**

(1) Mirrors. All refuse container hoist trucks shall be equipped with rear view mirrors on both right and left sides of the cab.

(2) Hoist Hook. The hoist hook shall not operate by gravity or any type of spring action other than a positive acting torsion spring.

(3) Equipment Changes. Any proposed modification to the hoist mechanism or the containers, other than as indicated above, shall be submitted in full detail to the Naval

Facilities Engineering Command for technical approval prior to installation.

0516. SAFETY FOR RIDERS

1. Restrictions on Riders

a. Unauthorized Riders. Under no circumstances shall unauthorized persons be allowed to ride in a motor vehicle.

b. Crowding the Operator. In addition to the operator there shall be permitted in the front seat of a motor vehicle only the number of passengers for which the seat was designed.

c. Standing. Standing in moving vehicles is prohibited except in buses provided with handholds or straps.

d. Containment of Passengers Within Vehicle. Under no circumstances shall any person be permitted to ride with arms or legs extended outside any vehicle, to ride on running boards, or to be seated on fenders, the top of the cab, cab shields, or the rear of the load, except when the vehicle is designed for or has provision for such purpose.

2. Restrictions on Vehicles Used. Cargo-carrying vehicles shall not be used to transport personnel while loads are being carried unless the cargo is secured against shifting in transit and special provisions have been made for seating personnel. Within Government reservations, empty trucks or trailers with side racks or stakes in place may be used to transport small groups (less than 12 persons) of seated passengers for short distances. Under emergency conditions, empty trucks or trailers without seats may be used to transport personnel when operated with special caution, relating speeds to road conditions. Trucks regularly used to transport personnel shall be equipped with seating facilities which are secured and with a rear endgate or guardrail properly secured. Such trucks shall not be moved until the operator has checked to see that all persons are seated and that required guardrails and endgates are in place. The use of dump trucks for transporting personnel is not recommended. If such use is required by station exigencies, the following steps shall be taken:

a. Positive means to prevent the raising of the truck bed while in transit.

b. Provision of a safe seating arrangement and access ladder.

3. Carrying Equipment on Vehicles With Riders

a. Stowage of Tools. Tools and equipment carried on a motor vehicle which also carries riders shall be properly stowed and fastened.

b. Prohibition Against Explosives. No explosives, flammables, or toxic substances shall be transported in a vehicle while it is being used to carry riders other than authorized workmen.

4. Protection in Cold Weather. All open motor vehicles transporting personnel during cold or inclement weather shall be provided with a tarpaulin or other suitable covering.

5. Loading and Unloading Personnel. No person shall be permitted to get on or off a motor vehicle while it is in motion. Vehicles shall be brought to a complete stop before loading or unloading passengers.

0517. TRANSPORTING EXPLOSIVES

The transportation of explosives is extremely hazardous. Basic rules for road safety (see 1512) must be carefully studied by operators of motor vehicles carrying explosives, and in addition the special precautions of this article shall be closely followed.

1. Application of Regulations. The transportation of explosives shall be in compliance with Interstate Commerce Commission regulations and any local, State, and municipal regulations which apply to highway transportation. The provisions of Ordnance Pamphlet No. 5 (OP 5), Volume 1, Chapter 9, Paragraphs 0924 through 0935 also apply.

2. Qualified Personnel. Every vehicle used for the transportation of explosives shall be under the supervision of and operated only by a person who is properly qualified, physically fit, careful, reliable, and able to read signs and labels written in the English

language or language prevailing in country or countries being traversed. Except as provided in OPNAV Instruction 5510.83, *Criteria and Standards for Safeguarding Nuclear Weapons,* no person other than the authorized driver, one helper or relief driver, and a courier (where required for classified material) shall be permitted to ride on a vehicle transporting explosives.

3. Preparation of the Vehicle

a. Vehicle Inspection. Vehicles used in the transportation of explosives shall be inspected immediately before use in accordance with NAVWEPS OP2165 (2nd Rev.), Article 0403 and NAVWEPS OP2239 (1st Rev.), Article 404.

b. Floors. The floor of each vehicle used in the transportation of explosives shall be tight, substantially constructed and free of unnecessary holes and openings. They must be of wood or have that portion of the interior which is in contact with the load covered with either non-metallic material or non-ferrous metals. Skids, wood pallets and other appropriate loading devices may be considered as flooring and sufficient to meet the requirements stated. Floors shall not be permeated with oil or gasoline, or other combustible materials.

c. Fire Extinguishers. Each Navy vehicle used for the transportation of explosives shall be equipped with fire extinguishers in accordance with the requirements of NAVWEPS OP2239 (1st Rev.), paragraph 0604.2. They shall be properly filled, securely mounted on brackets, and located so they are readily accessible and easily removed.

d. Warning Signs. Vehicles used for the transportation of explosives on or off the station shall carry four placards appropriate to the load (i.e., *Explosives* for Class A and *Dangerous* for Class B explosives, etc.). They must be printed in letters at least 8 inches high and set in contrasting backgrounds. One placard shall be placed on each side, on the front, and on the back of the loaded vehicle. The letters or the background must be light reflecting. The front placard shall not have any red-reflecting color. Each vehicle shall also be provided with two red flags and appropriate stands and with three electric flares or reflectors, to be used in case of emergency stops as described in article 0513.1. On-station industrial trucks engaged in towing explosive-loaded bomb trailers and the towed trailers shall be appropriately placarded. Such vehicles are exempt from the requirements for additional safety equipment other than fire extinguishers. This exemption is not applicable to on-station commercial tractor-trailer operations.

4. Loading and Unloading Explosives

a. Restrictions on Load

(1) Keeping to Rated Capacity. Vehicles used for transportation of explosives shall not be loaded beyond their manufacturer's rated capacity, and in no case shall the explosive container be piled higher than the closed sides and ends of the body. If the vehicle has an open body, the sides and ends shall be securely fastened and the explosives shall either be covered with a fire, water, and weather resistant tarpaulin, or be packed in containers that are fire, water, and weather resistant.

(2) Carrying Other Substances. No metal, carbides, oil, firearms, electric batteries, flammable substances, acids, or oxidizing or corrosive compounds shall be carried in the body of any vehicle while it is being used for transporting explosives. Tools may be carried provided the explosives are properly packaged; and provided that the tools are separated from the explosives by bulkheads and so secured in place as to prevent damage to the explosives or packaging thereof. Ordnance Pamphlet No. 5, Volume I, Chapter 9, Paragraph 0927.11 also applies.

b. Care During Loading and Unloading

(1) Stopping Engine. The engine of a vehicle shall be stopped during loading or unloading of explosives. Packages or containers of explosives unloaded from a vehicle shall be placed at a sufficient distance from the exhaust to prevent the danger of engine sparks igniting the explosives.

(2) Proper Handling. Packages or containers of explosives shall not be thrown or dropped while being loaded or unloaded.

564-350 O - 74 - 6

They shall be carefully deposited and stored or placed in such a manner as to prevent the packages or containers from sliding, falling, or being displaced. When being unloaded, they shall be stored directly in a magazine or a responsible person shall be put in charge of them.

(3) Provision for Loading Dynamite. If State and local laws permit, dynamite and detonators may be transported in the same vehicle provided that the amount of dynamite in such instances does not exceed one case (50 pounds) and the number of detonators does not exceed 100. When dynamite and detonators are transported in the same vehicle they shall be separated by a divider of not less than 4-inch hardwood or material of equivalent resistance. Separate vehicles shall be provided for the transportation of more than one case (50 pounds) of dynamite or more than 100 detonators.

5. **Safety in Driving**

a. Weather Conditions. Explosives should not be transported during hours of darkness or during adverse climatic conditions except in an extreme emergency and then only with the written approval of the proper authority and when all precautions have been taken.

b. Avoiding Congested Areas. Transporting explosives through cities, towns, and other congested areas shall be avoided when possible. When unavoidable, the proper official of the area shall be advised of the proposed trip in order to assure the use of the most desirable thoroughfare and to provide an escort if necessary.

c. Driving Speed. Vehicles transporting explosives shall be operated with extreme care and shall be driven at a safe speed not to exceed 45 miles per hour except that minimum State speed limits shall be observed.

d. Stops. When explosives are being transported, no unscheduled stops shall be made. At scheduled stops the vehicle shall never be left unattended and the driver shall not leave the controls without first ascertaining that the parking brake has been securely set and all reasonable precautions have been taken to prevent movement of the vehicle. Stops for refueling, crossings, and emergencies shall be in accordance with the following rules:

(1) Railway Crossings. Before crossing at grade level of any railroad track or tracks, the operator of any motor vehicle carrying explosive substances or flammable liquids shall stop his vehicle, preferably within 50 feet but not less than 15 feet from the nearest rail of such railway; while stopped he shall look and listen in both directions for approaching trains, and shall not proceed until he can do so safely. Upon proceeding he shall cross only in such gear of the vehicle as will make unnecessary a change of gears while on the tracks. No stop need be made at any such crossing where a police officer or traffic-controlled signal directs traffic to proceed.

(2) Refueling. The gasoline tank of a vehicle shall not be refueled while explosives are in the vehicle except in an emergency, and then only after the engine of the vehicle is stopped, all lights are extinguished, and suitable ground for static electricity is attached.

(3) Emergency Stops. If an explosive-carrying vehicle becomes disabled in any way the operator shall, if possible, drive it off the street or highway before coming to a stop. If this is not possible, two red flags in stands (in the daytime) or two electric flares or reflectors (at night) shall be so placed on the street or highway in the line of approaching traffic as to provide visibility for a distance of not less than 500 feet ahead and behind the stopped vehicle, and one red flag (in the daytime) or electric flare or reflector (at night) at the side of the vehicle to indicate restricted clearance for passing traffic.

6. **Use of Garage.** A vehicle containing explosives shall not be taken into a public or Navy garage or repair shop for service, nor serviced or parked in a congested area, nor stored in a Navy garage or public facility.

7. **Radios.** Radio-frequency energy of any type may cause inadvertent ignition of

ordnance components. Motor vehicles equipped with radio transmitters shall not transport electric blasting caps and other electrically fired ordnance. Radio transmitters in any motor vehicle shall not be operated within 25 feet of any area where electric blasting caps are located and radio transmitters with an output of 250 watts or more shall not be operated within 100 feet of such areas.

GARAGE SAFETY

0520. GENERAL HOUSEKEEPING

1. **Cleanliness**

a. **Floors and Other Exposed Areas.** The distribution center, garage, or workshop shall be thoroughly inspected daily and maintained in a clean and orderly state. Floors and other exposed surfaces shall be kept scrupulously clean. Hazards on floors such as oil, grease, or loose tools, which might result in fire, slipping, tripping, or falling shall be eliminated as quickly as possible.

b. **Grease Rack.** Particular care shall be taken to maintain cleanliness in the area around the grease rack as well as in the rack itself. Be sure that grease connections are fast to car connections when greasing a car. At the close of business each day, clean the grease rack and floor.

c. **Walks and Drives.** Loose stones or gravel on walkways and driveways shall be removed daily. Keep walks and drives free of ice in winter, and remove icicles from the eaves.

2. **Ventilation.** Garages and repair shops shall be well ventilated for protection of service personnel against accumulations of carbon monoxide. If these spaces are not equipped with adequate ventilation, doors shall be opened whenever engines are running.

3. **Illumination.** Adequate illumination shall be provided and utilized for all general work areas, including work benches and lubrication pits. For minimum lighting required in specific situations see article 0213.

4. **Safety During Repairs.** Use warning signs or barricades to protect personnel when construction, repair work, or painting is in progress.

5. **Avoiding Tripping Hazards.** Covers on sidewalk boxes, fuel tanks, and pipe openings shall be flush with surfaces and shall be kept closed when not in use. All tools and equipment shall be kept in their proper places when not in use and shall particularly be kept out of walkways to avoid tripping hazards.

6. **Checking Overhead Fixtures.** Check overhead signs frequently to make certain that they are secure.

0521. PROTECTION OF PERSONNEL

The following personnel protective equipment shall be used by workmen in a distribution center, garage, or workshop:

1. **Apparel Required.** Mechanics shall wear goggles or face shields, rubber gloves, aprons, safety shoes, and special gloves as needed.

2. **Goggles.** Goggles shall be worn for all grinding, chipping, cutting, welding and when using compressed air, or for similar operations designated by local command. See article 1011.6 for proper shade numbers of filter lenses for gas cutting, gas welding, or electric welding work.

3. **Prohibition Against Rings.** Rings shall not be worn by workmen servicing batteries or working on motor vehicles.

0522. FIRE PREVENTION

1. **Fire-fighting Apparatus.** Fire-fighting apparatus shall be kept in proper working condition and well distributed, with locations marked in accordance with NAVDOCKS P-309, *Application of Color to Shore Establishment.* Garage personnel should be trained in the operation of this equipment.

2. **Smoking.** Smoking or the carrying of lighted cigars, cigarettes, or pipes near pumps, batteries or vent pipes shall be prohibited.

3. **Handling Gasoline.** For a detailed treatment of the characteristics of gasoline and the fire hazards involved, see Chapter 20 and article 0525.

0523. EQUIPMENT AND TOOLS

The pertinent precautions of Chapter 14 apply in addition to the rules in this chapter.

1. **General Rules**

a. Keep tools in their proper places when not in use.

b. Use only the correct tools for a particular job.

c. Never use defective tools.

d. Keep tools and hands free of grease. Clean tools with an approved solvent.

e. When using a bar on springs, work bar away from the face.

f. Lift small batteries with battery straps designed for this purpose. On large batteries use insulated lifting bridles designed for this purpose.

2. **Blow Torches.** Blow torches shall not be used to clean crankcases, transmissions, radiators, or grease guns; steam, hot water, or other suitable degreasers shall be employed for this purpose.

3. **Grease Guns.** Grease guns must be handled carefully and used only for the purpose intended. Serious injury has resulted when grease has been shot out of a grease gun in horseplay; *never* point the gun toward another person.

4. **Lube Dispenser.** Keep the dispenser where it will be out of the way, and check it at regular intervals for leaks.

5. **Mobile Grease Cart.** The mobile grease cart must be returned to its proper place immediately after it is used, and the hose must never be left lying along the floor.

6. **Air Compressors and Tanks.** The applicable precautions and inspection requirements detailed in articles 0735, 0736, and 0737 shall apply.

0524. REPAIRING AND SERVICING VEHICLES

1. **Body and Engine Work**

a. **Entering the Garage.** When a car is being driven into a garage, personnel shall stand well out of its path. Never try to service a moving vehicle.

b. **Securing the Hood.** Work shall not be started under a hood of a vehicle unless the hood has been firmly secured in the open position. Hood holddown clamps or locking devices shall be kept in good condition. Additional holddown clamps should be installed where necessary.

c. **Broken Glass.** Care shall be taken to avoid injuries from broken windshields, light globes, lenses, or jagged pieces of metal around the car.

d. **Radiator.** If the radiator is steaming, the hands should be protected with a large rag, and the steam allowed to escape, before removing the cap entirely. Matches shall not be used when looking into a radiator.

e. **Cranking the Engine.** If it is necessary to crank an engine by hand, the brake must first be set and the gearshift placed in neutral. In cranking, the handle should be grasped with the thumb alongside the fingers, and not around the crank. If possible, start the engine by a series of quick pulls. Spinning should always be started with an *upward pull;* never with a downward thrust.

f. **Lifting Heavy Parts.** To prevent personal injury when removing or replacing heavy parts, such as gear units or hub and drum assemblies, mechanics should always use a hoist, jack, or dolly.

g. **Restriction on Leaded Gasoline.** Do not use gasoline containing tetraethyl lead for anything but motor fuel. If this type of gasoline is spilled on the body, wash it off thoroughly, as it is a deadly poison.

2. **Vehicle Stands.** Approved metal vehicle stands shall always be used when work is being done under a vehicle from which the wheels have been removed. Wooden blocks or horses shall not be used for this purpose. Hydraulic lifts are permissible.

3. **Dump Trucks.** Before starting repairs on a dump truck, with the dump body in a raised position, the body shall be secured by inserting the safety pins in the safety locks, or in the absence of such locks, the body shall be secured with sturdy blocking or triangular steel stands designed for this purpose.

4. **Working on Raised Vehicles**

a. **Jacks**

(1) Inspection. Jacks shall be inspected visually for cracks, looseness, and wear. If there is any doubt about the condition of a jack, it must not be used.

(2) Blocking. Be certain that a vehicle is properly blocked when working under it. Do not depend entirely on jacks.

(3) Centering. Center the service jack on the axle when a wheel is to be removed from a car. The jack should always be set on a solid footing.

(4) Capacity. Never use a jack for a load in excess of its rated capacity.

(5) Handle. Place the jack so that the swing of its handle will be unobstructed. Never leave a jack standing under a load with the handle in the socket.

(6) Keeping Clear. Never lean over a jack handle or handle socket under load. Keep the body clear of the car, in case it should suddenly start to roll.

b. **Hydraulic Lifts**

(1) Inspection. Inspect hoists at regular intervals for oil leaks, oil level, and proper lubrication. Check overhead connections at regular intervals, and make frequent inspections of safety locks on gears; the teeth of gear locks should not be worn or chipped. Never use a defective hoist.

(2) Putting Vehicle on Lift. Do not stand in front of a hoist while a motor vehicle is being guided onto it.

(3) Securing Vehicle. Never permit occupants to remain in a vehicle when it is to be lifted. Be sure, before lifting a vehicle, that the ignition is off, the gears are in neutral, the wheels are blocked, and the doors are closed.

(4) Freewheel Lift. If the freewheel type of lift is used, be sure the car is properly balanced. Raise the lift just enough to take the weight off the wheels, check the blocks and knee-action plates to determine whether the car is resting properly, and set the hand brake.

(5) Raising the Hoist

(a) When the hoist is raised, use the safety leg, and check to see that safety catches are secured.

(b) Never rock the car when the hoist is raised.

(c) Raise and lower the car slowly. Do not try to rush the action of the hoist, as the gears may slip.

(d) Do not attempt to raise a vehicle that may be heavier than the capacity of the hoist.

(e) Except for cleaning purposes, never raise the hoist when it is not in use.

(6) Self Protection During Work. When working on raised objects, stand in such a position that your feet will not be crushed if the object should fall.

5. **Car Pits.** The use of existing pits, elevated racks, and various mechanical lifts for lubrication and other work is acceptable but not recommended except pits used for railroad equipment. Twinpost adjustable hydraulic, air-oil operated, flush-floor mounted lifts are recommended for this purpose and shall be specified in new construction. In the use of existing pits, the following precautions shall apply:

a. Only approved cleaning compounds shall be used in car pits. Never use gasoline or other flammable solvents.

b. Do not place tools or debris on pit steps and always keep the steps free of oil and grease.

c. Arrange for proper lighting in the pits.

d. Keep the drain open.

e. Erect adequate safeguards around pits.

f. Do not allow unauthorized personnel in pits.

g. Keep guard chains for pits in place when the pits are not in use.

6. **Charging Batteries (see article 1520)**

a. Beware of burns and shocks when charging batteries. Use rubber gloves when necessary.

b. Vent caps should be replaced before attaching or detaching charger cable; fumes arising from batteries in the recharging line are flammable.

c. Be sure that connections to batteries are properly made and secured.

d. Care shall be used in handling battery acids. When preparing electrolyte, the acid shall always be poured into the water.

7. **Welding.** See Chapter 10 for specific precautions to be taken in welding operations.

8. **Installing Tires**

a. Removing Hub Cap. When removing a hub cap, hold one hand against the side of the cap so that it does not fly into your body when it is released.

b. Removing Tire. When removing a tire from a wheel, remove the core from the valve stem and turn the wheel until the valve stem is on the lower quarter; then pull the tire opposite the stem. This saves lifting the tire, which can be rolled off the wheel onto the ground. Such a procedure is particularly useful when changing truck or bus tires.

c. Cracked Rims. In replacing tires, take care that the rims are in good condition and that the lug nuts are tight.

d. Lock Rings. See that the lock rings are properly installed. This should be done before the tire is fully inflated.

e. Inflating a Tire. Inspect a tire for defects and determine the proper pressure before inflating it. When inflating a tire, turn your face away from it; never hold it between your legs. Tires on wheels equipped with lock rings must be inflated in a safety cage when removed from the wheels. Tires on split wheels must be deflated before removing the wheel from the vehicle and inflated after installing the wheel on the vehicle.

f. Installing Tire on Wheel. When putting a tire on a wheel, turn the wheel until the opening for the valve stem is on top. Then, resting the tire against the wheel with the stem on top, stoop, place a hand on each lower quarter of the tire, and lift it into place.

g. Split Wheels. All bolts on split or two piece wheels must be tightly secured before inflating tire. Tire must be deflated before loosening bolts.

9. **Sodium Filled Valves.** Automotive shop mechanics and supervisors shall be familiar with the hazards of the metallic sodium found in "sodium filled" engine valves. Special provisions shall be made for the temporary storage and disposal of these parts when they are replaced. They shall not be discarded to the metal scrap pile, but shall be shipped to the nearest naval ammunition depot for proper disposal. They shall be appropriately tagged for identification.

0525. FUELING MOTOR VEHICLES

1. **Authorized Personnel.** Only authorized personnel shall be allowed to fuel motor vehicles, and they shall have a thorough knowledge of the hazards involved.

2. **Care of Pumps**

a. If the pump is electrically operated, be sure than the motor is shut off after the gasoline has been delivered.

b. Check at regular intervals for leaks at pipe connections, stuffing box, and meter. If leaks are found, do not attempt to repair them. Call a repairman, and keep the pumps out of service until the repairs have been made.

c. Have the base bolts secure at all times.

d. Do not attempt to make electrical repairs on pumps. Call a serviceman.

3. **Using Fueling Equipment**

a. Equipment Maintenance. Do not use leaky hose, pumps, valves, or faucets. Arrange for them to be repaired at once.

b. Gasoline Containers. Gasoline shall not be left standing in unlabeled containers; metal safety cans must always be used. If gasoline is to be carried away, it shall be done only when in the metal safety can, tightly capped, and suitably marked.

c. Automatic Dispensing Nozzles. Automatic shut-off dispensing nozzles may be used without attendance, only if the nozzles are approved and listed as such, without limitation, by the Underwriters' Laboratories, Inc. When such nozzles are used without attendance, the following precautions shall be observed:

(1) The engine and lights of the vehicle being fueled shall be shut off.

(2) Exhaust extensions of operating internal combustion engines shall be at least ten feet from the point of fuel delivery.

(3) Each automatic shut-off nozzle shall be checked daily by attendants for wear or damage; shall be checked weekly by station fire department personnel; and removed and repaired or adjusted by a manufacturer's representative at six-month intervals or after 50,000 cycles of operation, whichever comes first. Records of these inspections shall be kept by the service station.

(4) a 50-pound wheeled CO_2 or 30-pound dry chemical extinguisher shall be provided at each service station where such nozzles are used.

(5) Attendants shall be fully instructed in the regular inspection of the automatic shut-off nozzles and the use of the fire extinguisher.

(6) Station fire prevention regulations shall specifically include the requirements of this paragraph.

4. Fueling Procedure

a. Bonding. To prevent electrical static discharges, tank and nozzle shall be kept in metallic contact while gasoline is being poured into the fuel tanks. This rule applies to all kinds of motor vehicles, and especially to gasoline trucks.

b. Proximity to Antennas. The fueling of motor vehicles in the proximity of antennas and antenna down leads should be avoided or conducted with special precaution. An ungrounded automobile, ungrounded filling nozzle, or merely the attendant's body in close proximity to transmitting antennas and down leads, may produce sparks sufficient to ignite gasoline vapor when the nozzle comes in contact with the tank opening. Pump nozzles must be grounded at all times, and motor vehicles, when fueling, must also be gounded before opening the tank.

c. Danger from Fumes. To minimize the effects of gasoline fumes, the face should be turned away from the fuel pipes while making deliveries of gasoline. Always drain the nozzle before removing it from the tank of a vehicle.

d. Battery Terminals. If the gasoline tank is located under the seat, do not permit the nozzle to touch the battery terminals.

e. Danger of Overfilling. Take special care that fuel tanks are not filled to overflowing. This is particularly important in the case of motorcycles.

5. Fire During Fueling. If fire should break out in the fuel spout during fueling, remove the hose from the tank immediately and smother the fire with CO_2, dry chemical, or foam extinguishers, dirt, sand, or a wet cloth (preferably chamois, if it is available).

6. After-fueling Procedures

a. Caps and Plugs. Replace caps or plugs securely immediately after using drums or barrels containing gasoline. Caps and plugs should be in place when drums or barrels are empty, and these containers should be removed from the garage as soon as possible.

b. Pumps. If the gasoline pump is of the visible bowl type, drain the gasoline from the bowl when securing the pump.

c. Measuring Cans. Turn empty measuring cans bottom up and dry them thoroughly before storing them.

d. Personal Hygiene. After handling gasoline, mechanics should wash their hands thoroughly before eating. Clothing that has become soaked with gasoline should be changed immediately, to prevent possible burns and dermatitis of the skin. Gasoline-soaked rags should never be carried in the pockets.

Chapter 6
LONGSHORING AND WATERFRONT OPERATIONS

CARGO HANDLING

0601. INTRODUCTION

The safety regulations included in this section shall govern activity for all cargo handling. However, because of the special handling required for flammables and explosives (whether they are handled as cargo, for fuel, or for other purposes), they are treated separately.

0602. SAFETY FOR PERSONNEL DURING CARGO HANDLING

All personnel are required to board and leave ships by the gangplank or by other means provided when cargo is being handled. Boarding or leaving a ship via cargo-handling gear or by climbing up or down a save-all, is prohibited. When ships' holds are equipped with stairways these must be used in lieu of ladders. Entering or leaving ships' holds by means of ships' cargo-hoisting gear is prohibited. In area where the handrails have been removed to make way for cargo, ropes must be used to block off the space to prevent personnel from falling overboard.

0603. PREPARING PIER AND CARGO GEAR

1. Pier Inspections. Pier flooring and structures should be inspected periodically. If defects are found, temporary repairs should be made immediately, and permanent repairs made as soon as possible. The pier must be in proper condition when used during cargo handling operations.

2. Preparation and Maintenance of Ship's Gear

a. Proper Use of Gear and Tools

(1) Ship's cargo falls or whips shall not be used for mooring or shifting berths.

(2) Cargo falls or ship's hoisting gear shall not be used to move railroad cars on piers.

(3) Cargo booms should be tested and have their approved capacity plainly marked in a conspicuous manner and place, preferably at the heel of the boom.

(4) Chains must be in good condition before they are used for sling loads. There shall be no kinks in chains, they shall never be shortened by wiring or tieing, and repairs shall never be made even temporarily by bolting two links together or by the use of wire.

(5) Blocks, crowbars, chain slings, and other equipment must not be thrown from the deck to the ship's hold or to the pier.

b. Maintenance of Gear. Inspection of ship's cargo gear should be made by the ship's crew before the gear is used for stevedoring operations. The crew should give all assistance possible to keep ship's cargo gear in proper condition while it is in use.

c. Rigging of Ship's Gear. See article 0821.2 for additional information concerning wire rope and rigging.

(1) Winding the Winch Fall. Whenever possible the winch fall should be so wound that the lever will have the same direction of operation as the load being handled.

(2) Making Fast Boom Guys and Preventers. The boom guys and preventers should be kept as far away from the heel of the boom as possible, but not past the line of the fall. They should be made fast in order to divide the strain. Preventers should be made fast around the head of the boom, independent of all other fastenings. Booms should always be topped so as to avoid undue strain on both the boom and the topping lift. Special caution should be used where

the Samson or derrick post is low. The dragging of one fall against the other, without plenty of sag, is positively dangerous and must be avoided.

(3) Using an Additional Preventer. When the location of winch controls is such that they expose a winch driver to the bight of the fall, an additional preventer should be placed on the lead block at the heel of the boom. The preventer should not be less than 5/8-inch wire cable and preferably 3/4-inch or larger. Lanyards must be attached to beam bridles and used when handling beams or pontoon hatch covers.

3. Inspection and Preparation of Stevedore Gear

a. Save-alls. Save-alls must be stretched, hung, safely secured to both vessel and dock, and in line with each hatch when general cargo is being worked.

b. Reporting Defective Gear. If tools, materials, appliances, or other gear are at any time found to be out of repair, defective, or unsafe in any way, this condition should be reported immediately.

c. Inspecting the Gear. Stevedoring gear must be carefully inspected by designated and competent personnel before being issued for use. Any unsafe or doubtful gear must be discarded, marked, and so placed that it cannot be used by longshoremen.

0604. LOADING AND DISCHARGING CARGO

1. Preparing the Hatch

a. Clearing the Beams. Cargo which must be removed to clear the beams should be lifted from the hatch and stowed clear of working gear until the hatch covers and strongbacks are off and clear of working area.

b. Stowing Strongbacks and Hatch Covers. Strongbacks and hatch covers should be stowed in such a way that they will not interfere with a safe walkway for hatch tenders from rail to hatch coaming and will not be tipped by drafts or cargo into the hatches or over ship's side. If a safe walkway cannot be provided, two hatch tenders should be used.

c. Using One Section of Hatch. If just one section of the hatch is being used, the strongback of the adjacent section shall be bolted to the hatch coamings or otherwise secured or removed before any cargo is worked through the section being used.

2. Moving the Cargo

a. General Procedure

(1) No cargo should be loaded or unloaded at any intermediate deck by a fall or sling unless the hatch at that deck is safely covered, or a secure landing platform of a width not less than that of one section of hatch cover, has been placed across the hatch.

(2) Wooden decks on ships and lighters must be protected when working heavy or rough-edged cargo across them.

(3) The gangwayman must not give the signal to hoist or lower any load unless it is properly slung and all the cargo secure, and no load shall be moved until the proper signal is given.

(4) Loads shall be hoisted evenly. Slack on falls should not be taken up or loads let go suddenly.

(5) Where cargo must pause enroute from the hold to the dock awaiting a clear working area, it shall never be suspended over the square of the hatch but shall be stopped over the adjacent deck.

(6) Loads shall be landed slowly and guide lines used when necessary.

(7) Blocks rigged to fairleads to shift cargo shall not be secured to pad eyes or staples other than those designated to withstand the working load.

b. Hoisting Heavy Weights. When heavy weights are being hoisted or lowered aboard ship, personnel supervising the operation are required to make sure that the gear used is of adequate strength and properly loaded. The following precautions shall be taken when heavy weights are moved:

(1) A watch must be stationed below and the word "Stand Clear" given to men working or passing below.

(2) Except where an emergency makes it impossible, the OOD shall detail a responsible petty officer to be present

when boats, planes, and other heavy weights are hoisted.

c. **Hoisting Palletized Loads.** Palletized loads which are being loaded or discharged shall be checked for safety before lifting. Only self-clamping pallet slings should be used and the load enclosed in safety netting or suitably strapped and banded. Wing or lip type pallets hoisted by means of bar bridles shall have an overhanging wing or lip at least 3 inches long.

0605. STOWING AND BREAKING DOWN LOADS

1. **Breaking Down Cargo.** When it is necessary to break down cargo, it should be done from the tops of tiers, one tier at a time. Tiers should never be dug into or pulled down. Overhanging pieces of cargo left on a tier should be broken down to prevent their falling as a result of sudden shocks or jars.

2. **Proper Tiering and Blocking**

a. Cargo should be tiered evenly, tied in, stepped back, or floored off in order to prevent collapse.

b. Any object liable to roll or shift should be blocked in position.

3. **Use of Dunnage.** Sufficient dunnage should be used to keep general cargo from contact with the steel of a ship's internal structure (frames, stringers, coamings). In tiering, dunnage shall be used to provide a firm flooring.

4. **Special Precautions for Deck Stowage**

a. Where cargo or loose material is stowed on any deck above a lower hold, it shall be adequately secured to prevent it from falling into the hold.

b. Deck loads shall be stowed so as not to interfere with the safe operation of the hatch and its associated cargo gear.

HANDLING OF FLAMMABLES

0610. HAZARDS IN HANDLING FLAMMABLES

Toxic vapors and fire are the principal hazards in handling of flammables of all types. For a thorough understanding of the dangers involved, personnel are referred to Chapter 20. Precautions for doing hot work in the vicinity of flammables are described in Chapter 10. The following additional hazards must be kept in mind:

1. **Bulk Handling of Gasoline.** Where gasoline is handled in bulk or as package goods, the distance which ignition sources must be kept from possible leaks or spills is considerably increased because of the ease with which gasoline vapors travel. Care must be taken to keep these vapors from accumulating in low places or in confined spaces.

2. **Dangers From Fuel Oil and Diesel Oil.** Diesel and fuel oils are not especially irritating or harmful to the skin if exposure is not prolonged. Where fuel oil must be cleaned off it can be done primarily with a rag dampened with diesel oil. (*Never use gasoline.*) Any remainder can be removed with a liberal application of soap and water. Both fuel oil and diesel oil must be kept away from the mouth, and medical aid must be obtained if any is swallowed accidentally. Vapors can be particularly dangerous, and the precautions set forth in Chapter 20 must be strictly followed.

3. **Special Dangers from Gasoline in Cold Climates.** In very cold climates the vapor-air mixture in the space above the gasoline in tanks may become explosive. This condition should be suspected whenever the liquid temperature drops below 20° F. In such cases all regular fire precautions shall be taken and work involving burning, cutting, welding, or any other hot work shall be done by permit only.

0611. PRECAUTIONS PRELIMINARY TO LOADING FLAMMABLES IN PORT

1. **Care of the Wharf**

a. **Cleaning**

(1) Any spilled oil on the wharf

shall be immediately cleaned up. Sand may be used to absorb it.

(2) All wharf risers shall be kept clean by wiping them with diesel fuel oil when necessary.

b. Watching Idle Pipelines. The expansion of products in idle pipelines as a result of heating is likely to develop excessive pressures. It is the duty of the wharf personnel to see that relief valves are installed and in order, to open manual relief valves when necessary, and to keep pressure gages on any filled but temporarily idle wharf lines, observing the gages at intervals.

2. Care of the Ship. Although chapter 20 emphasizes precautions to be taken against fire, the danger of destructive fire during loading is so great that additional warnings are necessary here.

a. Care of Controlled Fires During Loading. The following precautions shall be taken to prevent liquid gasoline or gasoline vapors from reaching the engineering spaces while fires are burning:

(1) The port captain or superintendent and the commanding officer of the ship must agree whether it is necessary to keep fires burning because of weather conditions, possible necessity of immediate departure, or other urgent reasons.

(2) If there is no vapor-collecting system and the reason for lighting fires is to raise steam for departure, tanks aft of amidships should be topped off before the fires are lighted so that any spill will not release vapors near the engineering spaces.

(3) There should be enough room left in all tanks being loaded to eliminate any possibility of a spill.

(4) If fires are to be lighted only to raise steam for the ship's departure, no changes in the ship's cargo control system should be made during the time they are burning, and no changes to shore lines or pumps which might increase the pumping rate should be allowed.

(5) A watch should be stationed near the boiler room ventilators to observe such conditions as leaks, overflows, changes in wind, or evidence of vapor, and to order ventilators closed and fires out at the first evidence of danger.

(6) A watch should stand by in the boiler room to execute instantly any order from the ventilator watch.

(7) The foreman or superintendent and a ship's officer should patrol the ship personally, observe conditions, and check the rate at which tanks are filled.

b. Prohibiting Open Flames. No fires, open flames, or open lights shall be allowed on the ship's deck, in the vicinity of vents, or in any compartment on, facing, or adjacent to that part of the deck on which cargo hose is to be connected. Proper warning signs shall be posted prohibiting open flames and smoking.

c. Limiting Repairs. No repairs involving hot work shall be permitted.

d. Avoiding Danger From Other Boats. Extreme care must be taken when tugs or other boats come alongside, as these may have open flames or fires, or may be operating electronic transmitting equipment.

e. Avoiding Danger From Stacks. Stacks of coal-burning tugs, dredges, pile drivers, and other coal-burning equipment should be fitted with spark arresters. Stacks must never be cleaned out when the vessel is lying at a fuel dock.

3. Care of the Area

a. Disposal of Flammable Rubbish. Under no circumstances shall cigar or cigarette butts, pipe ashes, or matches (whether smoldering or extinguished) be thrown overboard or through portholes while a ship is moored to a fuel pier or is within the vicinity of such a berth. Such rubbish shall never be thrown from any enclosure on the wharf where smoking or fire is permitted.

b. Establishing a Restricted Area. When gasoline is handled, avoidable sources of ignition both in ship and on wharf will normally be eliminated within a distance determined by safety and good practice; this is usually at least 200 feet, or at least 50 feet in the case of flammables other than gasoline. Such sources of ignition include not only fires, matches, and smoking, but also trolley cars, locomotives, power boats,

electrical equipment not specifically approved for use in hazardous atmospheres, and all motor vehicles not equipped with proper safety devices. They also include such sources of static electricity as steam or air jets, spray painting and sand blasting, and all sources of heat and sparks apt to be involved in mechanical repair work or in the use of electrical equipment, radio, or other electronic transmitting equipment. (See Chapter 15.)

c. Discontinuing Loading During Storms. Except during an emergency the loading or discharging of flammables shall be discontinued during an electrical storm.

4. Special Precautions Preliminary to Loading Gasoline. Loading and discharging gasoline is, of course, more hazardous than the loading of fuel oil and diesel oil. When gasoline is loaded the following precautions shall be taken in addition to those is paragraphs 1, 2, and 3:

a. Adequate firefighting personnel and sentries must be posted during handling of gasoline.

b. Procedures and safety precautions must be coordinated between the ship and any other activity participating in the gasoline handling.

c. Gasoline tank pressure limits must not be exceeded.

d. It is imperative that accurate records of the amount of gasoline in each of the ship's tanks be maintained at all times.

5. Preparing the Hoses

a. Grounding. Before the fuel hose is connected for transfer of fuel oil between ships and piers, each group of loading or discharging connections on the deck shall be well grounded by means of a copper cable to the connections on the pier, and this connection is maintained until after the fuel hoses are disconnected. In hooking up this grounded cable, the circuit is closed and opened at the shore end rather than at the ship end to avoid possible sparks in the vicinity of explosive fumes. A switch at the shore end of the cable is useful for this purpose.

b. Use of Gaskets and Flanged Couplings. Gaskets shall be used in every hose joint. Where flanged couplings are used, a sufficient number of bolts should be inserted to ensure a tight connection.

c. Supporting the Hose. Hose is connected and supported in a manner that will prevent chafing. When hose is supported by ship's tackle the fall is made fast to some stationary point on the ship, such as a cleat or bitt.

d. Use of Drip Pans. Drip pans shall be hung under hose connections and expansion joints to catch drips and small spills.

0612. LOADING OF FLAMMABLES

1. Providing a Hose Watch

a. During Discharge of Cargo. When cargo is being discharged ashore, it is customary for the ship to provide a hose watch to stand by at all times to signal the pumper if an emergency occurs or if there is a signal from the wharf and to check the pressures on the gages attached to the wharf risers and ship connections.

b. During Loading of Cargo. When vessels are being loaded the depot should provide a hose watch to check for spills and leaks as well as to signal the pumper as outlined in paragraph a. The absence or dereliction of a hose watch constitutes one of the most dangerous violations of safety rules.

2. Safety During Loading

a. Use of Firefighting Equipment. During the entire time that bulk or package cargo is being transferred at a fuel pier, sufficient ship's fire hose should be connected to the ship's hydrants and let out ready for use in case of emergency. The ship's fire main should be connected to the shore fire main, if possible, when there is no steam or other power available in the ship. Before cargo transfer is started, other ship and dock or depot firefighting equipment shall be placed where it will be ready for immediate use.

b. Precautions Against Fires. In the loading of flammables, the following safety rules shall apply:

(1) Avoiding Overheated Bearings. Overheated bearings, glands, and stuffing boxes in tankers can cause serious fires and explosions in pump rooms. Frequent inspections shall be made while pumps are operating to see that bearings are kept well oiled and cool running.

(2) Avoiding Sparking by Tools. Hammering of dogs and nuts shall be avoided. If hammering is necessary, wooden mallets or other nonsparking tools should be used. If the cargo is gasoline, this is obligatory.

(3) Preventing Oil Spills. To prevent spills, all sea cocks and sea suction valves should be locked or lashed shut except when actually in use. Scuppers that would drain any oil spill into the water should be plugged. Tank tops should be kept closed during cargo transfer and clamped down unless local orders require that they be unclamped, and tanks should be closely watched for leaks. Ullage plugs should be kept closed when not in use and should be weighted or clamped down in accordance with the ship's regulations. Flame-arrester screens, if used, must be in good condition, whole and unclogged and snugly fitting the ullage plate. If spills should occur the following precautions shall be taken:

(a) Oil spilled into the water should be cleaned up if possible, and any oil spill of consequence should be reported immediately to the commanding officer. The action to be taken may include warning vessels away, notifying downstream docks, calling the fire department to stand by, moving vessels from the dock, or (in quiet water) surrounding the oil with booms.

(b) Gasoline spills should be watched closely and, if there is any suspicion of gas hazard the surroundings should be tested for dangerous vapor concentrations.

(c) If fuel oil accumulates on the adjacent beach or on the wharf structure it shall be cleaned up immediately. The hose watch and wharfmen should observe the water at regular intervals for evidence of spilled oil; this is particularly important if fueling takes place at night.

(4) Caution with Fire Main. Pressure must be maintained on the fire main during fueling.

c. Stores Handling During Loading. Stores may be transferred direct to the poop deck during loading if the winch is driven by steam, air, or explosion-proof motor. In addition, any goods may be handled in emergency:

(1) if there is a vapor-collecting system, or

(2) if all tanks are kept closed and there is no escaping vapor on the side where stores are being handled.

Goods may be transferred during the *discharge* of gasoline cargo by permission of the responsible authorities. *In no case shall any ammunition, cargo, or stores be lifted over any hose which is in service and under pressure.*

3. Over-all Loading. Over-all loading (loading through an open hose directly into a tank hatch) is permitted only for fuel oil and diesel fuel oil. It is necessary in some cases and a time saver in others. During over-all loading the free end of the hose should always be lashed in position or otherwise firmly secured. Over-all loading should be strictly prohibited when any vapor hazard exists.

4. Additional Precautions for Night Loading

a. Floodlighting. Cargo transfer at night involves extra accidents and mistakes. In the absence of local regulations, night loading of gasoline should be accompanied with the greatest possible caution and should normally require thoroughly adequate vapor-proof floodlighting.

b. Special Patrols. If leaks from pipelines might enter the harbor, railroad tracks, city streets, or buildings, or if the lines or valves are likely to be tampered with, one or more men should be assigned to patrol the shore pipelines. This patrol is in addition to the normal wharf and ship patrols.

c. Use of Flashlights. Personnel should be provided with approved explosion-proof flashlights or electric lanterns, and these should be carried at all times while the work is in progress.

d. Topping off Tanks. Special precautions should be observed in topping off tanks, which should be done under the direct supervision of the ship's officer and the foreman and at a somewhat slower speed than that permitted by daylight.

0613. PRECAUTIONS AFTER LOADING OR DISCHARGING

1. Breaking Connections

a. Pans or buckets shall be placed under all hose connections before the connections are broken.

b. All hose should be drained free of oil and washed out with salt water, if possible, after loading or discharging operations are completed.

c. Extreme care must be taken to see that no oil escapes from hose or pipelines into navigable waters. Hose ends shall be covered immediately with wooden plugs or with blank flanges and gaskets, secured by at least three bolts.

2. Emptying Drip Pans. Drip pans and tubs should be emptied as soon as possible, either by the use of a hand pump or by pouring the contents into a drum.

3. Taking on Ballast. Taking ballast aboard an empty ship from which a gasoline cargo has just been discharged causes an outflow of vapor from the tanks and involves an ignition hazard differing only in degree from the hazard of cargo loading. In one way the danger may be greater, as the tanks may contain an explosive mixture. Taking ballast aboard should, therefore, be prohibited while fires are lighted, unless it is urgent that the ship leave and the commandant and ship's commanding officer agree that it is unsafe to leave the dock without ballast. When ballast is absolutely necessary all the applicable precautions for the prevention of fire shall be taken.

WATER SAFETY

0620. LIFE RINGS.

Life rings with life lines attached shall be placed at intervals of not more than 200 feet on docks and piers where the depth of the water and the nature of the activity warrants.

0621. LIFE PRESERVERS AND SAFETY BELTS.

Life preservers shall be worn in open boats or when directed by a person in charge of any boat. They shall also be worn by all personnel working over water or on floats or rafts and when working outboard of life lines, or working under similar unguarded conditions. In addition, those working at elevated positions over water shall wear safety belts with attached life lines. Life preservers shall be of the regular approved shipboard type or of the work type in accordance with Military Specification MIL-L-17653.

DIVING

0625. GENERAL.

Each type of diving operation and its requisite equipment give rise to unique demands for safety precautions too numerous and detailed to cover adequately in this publication. All divers and personnel connected with diving operations should be thoroughly familiar with those portions of the *U. S. Navy Diving Manual,* NAVSHIPS 250-538, applicable to their duties and responsibilities. The safety precautions contained in this article are common to all types of diving operations and are intended to be used as a check-off list by those responsible for safety in diving.

1. Administration and Planning

a. A competent diving supervisor shall be in charge of the operation.

b. All interested activities shall be notified that diving operations are in progress.

c. A recompression chamber shall be ready for use or the nearest command having one notified of the need for its readiness.

d. Provisions shall be made for obtaining medical assistance in case of emergency.

e. A timekeeper shall be assigned and he shall be informed of his duties and responsibilities.

f. Divers shall be thoroughly briefed in the operation and it shall be ascertained that they understand what is to be accomplished and how.

g. A lead-line or pneumofathometer reading of the depth of water shall be made.

h. Decompression tables shall be readily available.

i. When diving near the propellers or hull of a ship or submarine, the duty officer shall be notified not to operate propellers, bow and stern planes, vents, sound heads, or sonar.

2. Personnel

a. All divers must be proved to be fully qualified by physical examination and training for the type of diving and depths involved in the operation.

b. Divers suffering from severe colds, sinus or ear trouble, alcoholic intoxication or its after effects, fatigue, or acute illness shall not be allowed to participate in diving operations.

c. Men with questionable disorders or physical conditions shall be referred to a physician for examination and advice.

3. Equipment

a. Only equipment intended for the operation and adopted and approved for Navy use shall be used.

b. The equipment shall be inspected and shall be in good operating condition before each operation.

c. It shall be ascertained that there is an adequate supply of the compressed gas or gases required for the operation.

4. Diving Operations

a. Every precaution shall be taken to prevent the divers from becoming fouled on the bottom.

b. Divers shall be instructed not to cut any lines until they are sure of the purpose for which they are being used.

c. The diving boat or ship shall be moored in such a position as to minimize effort by the divers to reach their work, and it shall be at least a 2-point mooring.

d. The proper signals shall be displayed during the diving operations.

e. A standby diver shall be designated and shall be ready to dive in a minimum time.

f. If operation requires working inside a wreck, a diver shall tend the lines of the working diver from the point of entry.

g. Explosives shall not be discharged when a diver is in the water.

h. The full deep-sea diving outfit shall be worn when using electric power for underwater welding or cutting.

i. In all cases, the depth of the water and the condition of the diver (especially fatigue), rather than the amount of work to be done, shall determine the amount of time the diver is to spend on the bottom.

5. Recompression Chambers

a. The recompression chamber must never be used as a storage space. It shall be kept clear, clean, and ready for use at all times.

b. The required medical supplies as outlined in section 1.6.21, paragraph 30 of NAVSHIPS 250-538 shall be available at all times.

c. Only fire-retarding paint shall be used on the inside of the chamber.

d. Open flames, cigarette lighters, matches, and lighted cigarettes or pipes shall not be permitted in the chamber while it is being used.

e. Decompression and treatment tables shall be located both on the inside and outside of the chamber.

f. Fire resistant and non-static blankets shall be used in the chamber.

g. The wrench for the medical lock shall be kept inside the chamber at all times.

6. Compressed Gas Cylinders. Cylinders containing the compressed gases commonly

used in diving operations (air, helium, nitrogen, oxygen, and mixtures of these) shall be handled and maintained in accordance with the precautions of articles 2040 to 2050.

0626. SELF-CONTAINED DIVING

1. General Precautions. In addition to the general safety precautions contained in article 0625, the following precautions are applicable to all classes of SCUBA diving. Information as to limitations of diving duration and depths and other technical details is contained in the *U. S. Navy Diving Manual,* NAVSHIPS 250-538.

a. The "no decompression" limits of standard decompression table shall not be exceeded. Dives requiring decompression may be made if considered necessary by the officer-in-charge of the diving operations. Operational swimmers are authorized to dive to greater depths when operational requirements dictate and an officer-in-charge has made certain that personnel have been adequately trained and have sufficient experience to undertake the deeper dives. The total time of a SCUBA dive (including decompression) must never exceed the duration of the apparatus in use—disregarding any reserves.

b. The minimum permissible surface crew shall consist of: one tender-timekeeper for every lone surface-tended diver; one tender-timekeeper for all buddy pairs in one vicinity; and one standby diver for all lone surface-tended divers.

c. The Buddy System shall be used whenever possible and continuous contact shall be maintained.

d. Where visibility is poor, a short buddy line shall be used to link each other together.

e. Each diver shall know the standard diving signals and any special signals and shall be alert for and acknowledge promptly any signal from his buddy diver.

f. The location of the nearest recompression chamber shall be determined.

g. Divers shall always wear a life jacket that has been approved for SCUBA diving. The life jacket must be worn under all equipment that can be jettisoned.

h. Immediately prior to the dive, the diving supervisor should conduct a "predive inspection" of the diver and the equipment he is using.

i. Immediately after the dive, the diving supervisor should conduct a "post-dive inspection" of the diver and the equipment he used.

j. Only equipment that meets Navy approved specifications and is known to have been properly maintained and is in good operating condition shall be used.

k. Only gases that are known to have been supplied from a source that frequently conducts tests for impurities shall be used.

l. Divers shall not fly to cabin altitudes in excess of 18,000 feet or undergo recompression chamber ascents above this altitude equivalent within 12 hours following a SCUBA dive in excess of 30 feet or equivalent recompression chamber descent.

2. Open Circuit Precautions

a. The apparatus shall never be charged with oxygen.

b. The apparatus shall always be charged with clean air from a known source.

c. The cylinders shall be charged to the full pressure rating.

d. The cylinder pressure shall be determined immediately before a dive.

e. No dive shall be made without an adequate air reserve mechanism.

3. Closed Circuit Precautions

a. The apparatus shall never be charged with any gas except oxygen.

b. Fresh absorbent shall always be used in the canister.

c. Oil shall never be used on the pressure fittings.

d. Air shall be purged from the lungs and breathing system before starting a dive.

4. Semi-Closed Circuit Precautions

a. The apparatus shall always be charged with a standard mixture.

b. Fresh absorbent shall always be used in the canister.

c. The injection shall be carefully set to the proper flow for the depth anticipated.

564-350 O - 74 - 7

d. The maximum depth specified for the mixture in use shall not be exceeded.

e. Divers shall be constantly alert for failure of the exhaust valve to bubble.

f. The differential pressure gage shall be checked at frequent intervals to insure original gas flow is maintained during the dives.

BOATS AND FLOATING EQUIPMENT

0630. SCOPE

The precautions in this section are intended to cover self-propelled and non-self-propelled boats, service craft, and other floating equipment such as barges and floats which are assigned to the custodianship of a shore activity.

0631. RESPONSIBILITY

Activity directives should clearly indicate which divisions or departments are responsible for the operation, maintenance, repair, and security of the specific items of boats and floating equipment for which the activity is responsible, and should delineate the factors involved in the execution of these responsibilities.

0632. OPERATION

Boats and floating equipment shall be operated only by personnel known to be and designated as qualified to operate the type of equipment involved.

1. **Qualification.** Operators of self-propelled craft shall be qualified by oral and practical examination.

a. **Requirements.** Prospective operators shall demonstrate competency in:

(1) handling of power boats

(2) plotting and steering a compass course

(3) general seamanship

(4) reading charts of local waters

(5) recognition of pertinent signals and of storm warnings

(6) knowledge of the *Rules of the Road*

(7) knowledge of boat capacities and safety precautions

(8) familiarity with local waters,

(9) securing a boat after use.

2. **Alternate Qualification.** Possession of a U. S. Coast Guard motorboat operator's license may be accepted as satisfactory evidence of qualification to operate a self-propelled boat.

3. **Notice of Qualification.** Qualified operators should be issued a "Notice of Qualification" on which is noted the particular types and capacities of craft which the individual is qualified to operate.

0633. SAFETY EQUIPMENT

The following safety equipment shall be installed or carried on board all self-propelled craft assigned to an activity:

1. approved life jackets for all persons aboard (see article 0621)
2. life ring
3. approved fire extinguisher(s)
4. boat hook
5. whistle or horn audible for a distance of one mile
6. anchor and line, and
7. compass, charts, Very pistol and flares, running lights, and a lead line on craft which may operate in open waters.

0634. POSTING PRECAUTIONS AND INSTRUCTIONS

Appropriate safety precautions and operating instructions shall be prominently posted on each boat or self-propelled craft.

0635. FIRE PREVENTION IN POWER BOATS

Fires result from improper housecleaning on the boat, defects or leaks in machinery and equipment, and inadequate ventilation. On various gasoline-powered craft there exists the danger of fire or explosion resulting from carburetor flooding; leaky gasoline lines,

strainers, and tanks; and from spillage during fueling. In addition to the following precautions, the pertinent precautions in Chapter 20 should be observed.

1. **Equipment**

a. **Electrical.** Electric cable should be secured with clamps to prevent movement resulting in wear of insulation. Wiring shall not be permitted in the bilges. All bare electric terminals shall be wrapped with insulating tape. Engine wiring shall be periodically inspected for loose connections and damaged insulation.

(1) Batteries

(a) **Boxes.** The battery box shall be located outside a closed engine compartment and should be provided with a suitable drip-proof cover.

(b) **Battery Charging.** The charging of batteries will produce hydrogen gas which, if trapped and ignited, will result in an explosion. This applies particularly to motorboats having their batteries under the seats in the after part of the boat. If the battery is charged (other than from the boat engine generator) while in the boat, hydrogen may collect under the seats. If the hydrogen is not removed it can be ignited by a spark from the battery caused by a loose terminal or by the disconnecting of charging wires. Batteries should either be charged on deck or removed to an open space in the boat until the operation is completed.

b. **Flame Arresters.** Carburetor intakes on all inboard engines shall be fitted with an approved device for arresting backfire. They shall be securely clamped and shall be frequently inspected to see that they are intact and clean.

c. **Carburetor Drip Pans.** Carburetor drip pans shall be installed on all gasoline engines not equipped with approved type drip-proof carburetors. They shall be of a type which can be removed without spilling the contents. Drip pans shall be inspected and emptied frequently and shall be cleaned periodically.

d. **Exhaust Pipe.** Exhaust pipe insulation where it passes through the hull and elsewhere shall be inspected periodically. A poorly insulated pipe may set the boat afire or ignite nearby objects or gas fumes.

e. **Tank Vents.** In no case shall gasoline tanks be so vented that vapors displaced during fueling operations can flow into the boat or be trapped in enclosed spaces.

2. **Housekeeping**

a. **Care of the Engine and Engine Compartment.** Improperly maintained engines and engine compartments present a number of hazards:

(1) Clothing and waste materials. The engine compartment must be kept clear of clothing, and cleaning rags and waste shall be kept in a closed container and burned after use.

(2) Gasoline as a Cleaner. The use of gasoline for cleaning the engine or any other part of the boat is prohibited.

(3) Grease and Oil Encrustations. The greases and oils with which an engine becomes encrusted are a source of danger if not removed at regular intervals. These petroleum products will feed a fire, enabling it to get out of control rapidly.

b. **Washing Out the Bilges and Sumps.** Bilges and sumps shall be kept dry and shall be frequently washed out to clear them of fuel and oil. They shall be washed before hoisting into the boat skids. The space directly under the engine can be readily washed down by using hot water or a steam hose. This method will carry heavy oil and grease over into the sump, from which it can be pumped. Where engine compartment bilges are filled with brass-covered balsam wood or cork, frequent inspections should be made to ensure that the brass is tight and that no fuel can be absorbed by the filling medium.

c. **Ventilation.** The presence of fuel in the bilges or in a free state in a boat is dangerous, since the fumes can be ignited easily. The free fuel may come from leaks in the fuel lines or units of the system or may result from filling the fuel tanks too full. Fuel may flow through the vent holes because of the motion of the boat, or it may run out because of the expansion of the liquid as it

becomes warm. The fumes must be disposed of by proper natural or forced ventilation.

0636. FUELING GASOLINE POWER BOATS

1. Restrictions on Fueling. Under normal conditions gasoline power boats shall not fuel unless in the water, with the engines stopped and clear of other boats. Except in emergency, boats shall not be fueled at night. They shall *never* be fueled when passengers are aboard.

2. Proper Use of Fueling Equipment

a. Piping

(1) Ensuring Tight Seams. Fuel piping shall be extra heavy, and the joints and seams must be kept tight. Shellack shall be used in making up joints.

(2) Installing Cutout Valves. Fuel feed lines shall in all cases be fitted with cutout valves installed near the fuel tank and shall be so fitted as to be readily accessible in an emergency. The cutout valves are to be fitted with extension rods and operating handwheels and shall be so located that they may be controlled from the engine compartment.

b. Grounding Hoses. Grounding must be maintained throughout fueling and until the hose has been withdrawn and the filling flap closed. (See article 0611.5.) The hose nozzle shall be provided with a grounding wire fitted at the end with a spring clip. Before the cover of the filling connection is unscrewed this clip should be clamped on the screen provided in the flange of the connection.

c. Strainers. It is preferable to insert the nozzle of the grounded hose directly into the filling opening. However, when the use of funnels is unavoidable the funnels shall be fitted with 40-mesh wire gauze strainers. The use of a chamois strainer is prohibited.

d. Keeping the Tanks Capped. Tank-fueling caps shall be kept in place when fueling is not in progress.

3. Avoiding Open Flames. Smoking and naked lights (from oil lanterns, candles, matches, exposed electric switches, or slip rings or commutators of a dynamo) are prohibited in the vicinity while fueling. There shall be absolutely no use of such lights in compartments containing gasoline engines or bilges or within 50 feet of gasoline storage tanks or gasoline vapor.

4. Fueling Procedure

a. Preparing to Fill the Tanks. The following precautions shall be taken *before* the filling pipe cap is unscrewed to ensure a maximum of safety during fueling:

(1) Open the hinged covers fitted on the engine hood to permit a free circulation of air around the engine. Do not close these covers until fueling has been completed and the engine is operating satisfactorily.

(2) Inspect the tanks and filling pipes. Do not fuel unless these are tight at all joints.

(3) Close the cutoff valves at tanks.

(4) See that the hatch in the coxswain's flat on motor launches fits snugly.

(5) Close all openings (near the filling pipes) through which fuel vapor might pass into closed compartments.

(6) Ground the hose, as described in paragraph 2b above.

(7) Keep one member of the boat or dock crew standing by with a portable CO_2 fire extinguisher ready for use. The extinguisher is not to be returned to stowage position until fueling is completed and the engine is operating satisfactorily.

b. Filling the Tanks. When all the above operations and the related precautions have been carried out, the following steps shall be taken in filling the tanks:

(1) In standard tanks the filling pipe is the only opening provided for escape of vapor which is forced out of the tank during fueling. Therefore care should be taken not to push the nozzle so far into the filling pipe that it will choke the opening and thus prevent the escape of the displaced vapor.

(2) If for any reason the hoze nozzle is withdrawn during fueling and the ground wire becomes detached, the ground wire must be reattached to the screw before the nozzle is again inserted in the filling pipe.

(3) The nozzle trigger shall be kept under control so that fuel will pass

through the filling pipe strainer and so that overflowing can be avoided by reducing the flow when the tank is nearly full.

c. Procedure After Filling Tanks. If any fuel has been spilled, wash down and wipe dry.

d. Transfer by Portable Container. Gasoline shall not be transferred to a boat from a drum or other portable container unless the container has been isolated from other containers. An adapter shall be provided with a standard iron pipe-size screw thread on one end to fit the opening in a standard gasoline drum; the other end should be fitted with a Navy standard hose thread, to take a standard 1 1/4-inch inside diameter flexible metallic hose covered with rubber and fabric. This hose will be furnished in 25-foot lengths having couplings and nozzles with Navy standard threads. The standard gasoline-filling hose nozzle is of the "wet hose" type, which will release gasoline only when the operating lever is gripped and will automatically cut off the flow when the lever is released. This instantaneous control prevents overfilling of tanks. Overflow of the tank should be carefully avoided, especially on boats where the filling fitting is located inboard.

0637. STARTING THE ENGINE AFTER FUELING

Before starting an engine after fueling, or before starting when the engine has been idle for a day or more, every precaution must be taken to ensure thorough ventilation. The same precautions shall be taken if gasoline vapor is noticed when the boat is under way. Gasoline fires have occurred through ignition by sparks from some part of the electrical equipment while the engine was turning over; therefore it is necessary to the safety of both personnel and material to stop the boat and clear out the gasoline vapor before continuing to run the engine. The following precautions shall be taken:

1. Fire extinguishing equipment shall be readily available, and a crew member shall be standing by ready to operate it if necessary.
2. If door or hatch openings are inadequate to supply sufficient ventilation, air circulation may be induced by fanning or using an air bellows.
3. Fuel lines shall be inspected for leaks and any that are found shall be corrected immediately.
4. If gasoline has been spilled into the bilges during fueling, the bilges shall be washed down, pumped, wiped out, and aired thoroughly before the engine is started.

Chapter 7
POWER TRANSMISSION

MAIN MACHINERY

0701. UNINTENTIONAL STARTING OF ENGINES

Precautions against the unintentional starting of an engine must be carefully observed before overhauling operations are begun.

1. **Main Engine Clutch.** The main engine clutch must be disengaged.

2. **Jacking Gear.** The jacking gear should be engaged on an engine which is connected to a propeller shaft by a hydraulic clutch if the main motors in the compound drive have been started. This precaution will eliminate the danger of windage in the clutch turning the crankshaft.

0702. RELIEF VALVES.

1. **As Trouble Indicators.** If one of the relief valves on the working cylinders or on an air compressor blows several times, the engine or air compressor is to be stopped and the trouble corrected.

2. **As Safeguards Against Fire and Explosion.** Pressure relief mechanisms are fitted on enclosures where the ignition of oil vapor may possibly occur. The designated dimensions and adjustments are to be strictly followed.

3. **Locking.** Relief valves are never to be locked in a closed position except in case of emergency.

0703. AIR LINES

When the engines are stopped, starting-air and spray-air lines must be vented. Serious accidents may occur if the pressure is left on.

0704. RECIPROCATING STEAM ENGINES

1. **Warning to be Sounded.** Before an engine is moved by steam, a *stand clear* warning is to be sounded. Sufficient time should be allowed for co-workers to heed this warning before the engine is started.

2. **Jacking Gear.** When an engine is under steam, or when it has a vacuum in the condenser, the jacking gear must be engaged before a worker may enter the crank pit.

0705. ELECTRICAL INSTALLATIONS

1. **Entering Cubicle**

a. Deenergize exposed conductors before introducing any part of the body into the control cubicle.

b. Do not enter the propulsion control cubicle when buses are energized unless it is necessary to observe the operation.

2. **Starting Engines**

a. Inspect electrical machinery for loose bolts, improper clearances, shorted connections, broken insulation, or damaged parts.

b. Disengage the jacking gear before starting the engines.

c. Do not attempt to force the switches closed against the action of the mechanical interlock.

3. **Care of Equipment**

a. Do not allow water to drip or spray on electrical equipment from vent outlets, open hatches, or condensation on pipes and cables.

b. Securely fasten removable covers and access doors to power panels, control cabinets, and switchboards.

4. **Fire Prevention and Fire Fighting**

a. **General.** Chapter 15 of this publication, *Electricity and Electronics,* should

be studied for an understanding of fire prevention in areas where electrical equipment is used. The following procedures shall be followed in case of fire:

(1) Maintain CO_2 fire extinguishing equipment at hand and ready for instant use.

(2) In case of fire, shut off the machinery and deenergize the line circuits.

(3) Never use water or foam solution to extinguish the fire unless the circuits are deenergized and the fire gets out of control. Since water and foam solutions are electrical conductors, they may spread the fire.

(4) Close the ventilating systems in the affected compartments.

(5) If the fire is in a compartment adjacent to one of the engine rooms, excessive smoke and gases may be removed by starting the engines and drawing engine induction air from the compartment where the fire is located.

(6) Exercise precautions against smothering personnel when using firefighting equipment.

(7) Determine the cause of the fire and take corrective measures.

b. Fire in Generator or Motor. In case of fire in a generator or motor, observe the following precautions:

(1) Report the fire to the propulsion control room.

(2) Deenergize the equipment and reduce the speed as quickly as possible.

(3) If motor-driven ventilating blowers are installed on the machine in which the fire has occurred, the blowers should be secured.

(4) If a steam or water fire-fighting system is installed on the affected machine, do not admit steam or water to the machine until ordered to do so by the appropriate supervisor.

(5) If a carbon dioxide extinguishing system is installed on the affected machine, remove the covers on the machine and admit carbon dioxide through the openings provided for that purpose.

c. Fire in Control Cubicles or Cables. In case of fire in control cubicles or cables, deenergize the equipment and extinguish the fire with carbon dioxide.

0706. REMOTELY CONTROLLED MACHINERY

Whenever any motion of power driven machinery (mechanical, electrical, hydraulic, air) is remotely controlled, or not continuously visible to the person controlling such motion, and is capable of injuring personnel or damaging equipment, the person who authorizes operation of the machinery shall ensure that a safety watch of one or more persons is maintained in the areas where such injury is possible. Telephone communication shall be established and maintained between the station controlling the machinery and the safety watch.

PUMPS

0710. RECIPROCATING PUMPS

The following precautions shall be observed in connection with reciprocating pumps:

1. Never use a jacking bar to start a pump while steam valve to the pump is open.

2. Do not use boiler-feed pumps and other pumps in the feed system for any purpose other than boiler or feed water service except in an emergency.

3. Before opening a steam cylinder or steam-valve gear, be sure the drains are open and the steam and exhaust root valves are wired closed.

4. Before opening the water cylinder or valve chest of a pump which handles water at a temperature in excess of 120° F., make certain the suction and discharge valves are wired closed and the cylinder and valve chests are drained.

0711. CENTRIFUGAL, PROPELLER, AND ROTARY PUMPS

1. General Operating Procedures

a. Testing Relief Valves. Test relief

valves of positive displacement rotary pumps to determine whether they function at the designated pressure.

b. Jacking Pump. Never attempt to jack a pump by hand while the steam valve to the driving unit is open.

c. Governors. Do not tie down, or in any other manner make inoperative, the overspeed trip or the speed-limiting or speed-regulating governors.

d. Checking Governors. Check the speed-limiting and speed-regulating governors at least quarterly to determine that they are set to limit the speed of the unit to the rated speed under rated conditions.

e. Checking Overspeed Trip. Check the overspeed trip at least quarterly to determine that it is properly set. Overspeed trips should be set to shut off steam to the unit when the rated speed is exceeded by ten percent.

f. Speed for Loading. Be sure the rated speed is not exceeded by more than five percent for any condition of loading.

g. Glands. Make certain that glands on pumps carrying petroleum products or other hazardous liquids are in good condition and not leaking.

2. Rotary Pump Discharge Valves. Never operate a positive displacement rotary pump with the discharge valve closed unless the discharge is protected by a properly set relief valve of sufficient size to prevent a dangerous rise in pressure.

3. Centrifugal and Propeller Boiler Feed-Pumps. Do not use boiler-feed pumps and other pumps in the feed system for any purpose other than boiler or feed water service, except in an emergency.

0712. PUMP PRESSURE-REGULATING GOVERNORS

Personnel will maintain the same diligence while operating machinery with automatic control devices as when operating machinery which does not have such devices.

GUARDS

0715. GEARS AND FRICTION DRIVES

1. Encasement. Gears and friction drives should be completely encased. In gears where this is impracticable, a band guard shall be provided with side flanges extending inward beyond the roots of the teeth.

2. Spoke Hazard. Where there is a spoke hazard, the gears must be enclosed on the exposed side.

0716. SPROCKETS

Sprockets, wherever located, must be completely encased and the chain must be substantially guarded.

0717. BELTS

1. Specifications for Guards. If the guard or enclosure is within 4 inches of the belt, it shall not be less than 6 feet in height. Openings in the guard which are wider than one-half inch are to be protected by substantial material, such as wire netting of not more than one-half inch mesh. Mesh is to be constructed of wire not smaller than No. 16 gage U. S. Standard.

2. Inclined Belt Guards. The belt must be completely guarded, except wnere the lower run of an inclined belt is at least 6 feet and 6 inches from the floor.

3. Panel Support. A panel in a guard that is wider than 42 inches shall be supported across its width.

4. Overhead Belt Guards. An overhead horizontal belt with a lower run which is less than 7 feet from the floor or platform level must be guarded on the bottom and sides to a height not less than 6 inches above the lower run of the belt. However, in no case is it necessary for the guard itself to be more than 7 feet in height.

5. Passageways. Pulleys which are of a size and location to permit passage between the upper and lower runs of the horizontal

belt shall be provided with standard railing. A substantial passageway which is guarded on the sides and top must be constructed. If such guard is not provided, all space traversed by the belt must be completely barred against passage.

0718. SHAFTING

Vertical and inclined shafts shall be encased with stationary guards to a height of 6 feet from the floor or platform level. Horizontal shafting which is less than 6 feet from the floor or platform level shall be encased with stationary guards over all rotating couplings outside of shaft alley.

0719. GENERAL GUARD CONSTRUCTION

1. **Uprights.** The uprights used for supporting the guards should be made of angle iron 1 × 1 × 1/8 inch, to 1 1/2 × 1 1/2 × 3/16 inch or iron pipe 3/4 inch to 1 1/2 inch inside diameter, or construction of equivalent strength. The sizes should vary between these limits according to the weight and size of the guard, its location in relation to aisles, and the possibility of its being damaged by moving equipment.

2. **Fastenings.** The filling material should be fastened to the supports in the following manner: 3/4 inch by 1/8 inch flat iron fastened to the angle by means of 3/16 inch bolts or rivets placed at intervals not exceeding 10 inches, or wooden strips 1 inch by 1 inch fastened to angles by means of 3/16 inch bolts. Other methods providing equivalent strength may be used.

STATIONARY BOILERS

0725. GENERAL

1. **Ventilation.** As a protection against toxic or explosive gases, boiler settings are to be ventilated completely and tested for the presence of toxic or explosive gases before workers are permitted to enter.

a. **Manholes.** On boilers having a manhole on each side of the drum, the covers of both manholes shall be removed for ventilation purposes before men enter the drum.

b. **Fan.** When practicable, a ventilating fan is to be operated in the drum when men are working in the boiler.

c. **Stop Valve.** Before men enter steam drums, mud drums, or other water side enclosures, steam and feed lines connecting to the headers under pressure shall be isolated by a stop valve and a blank with open tell-tale valve in between, or by two stop valves with tell-tale valve opened in between.

2. **Testing and Inspection**

a. **Inspection.** Stationary and portable boilers ashore shall be inspected and tested in accordance with NAVDOCKS, P-322, *Inspection for Maintenance of Public Works and Public Utilities.*

b. **Valve Testing.** Workers shall not be inside the water side of the boiler when pressure is being applied to test a valve which has not been under pressure.

c. **Boiler Water Testing.** Boiler water is to be tested in accordance with directions contained in the NAVDOCKS MO-205, *Central Heating and Steam Electrical Generating Plants.* Workers are to wear protective clothing and to follow precautions prescribed in NAVDOCKS MO-205.

d. **Air Leaks.** Boiler settings shall be examined daily for external air leaks. Cracks, blisters, or other dangerous conditions in joints, tubes, seams, or blow-off connections are to be reported to the proper authority immediately.

e. **Deposits on the Heating Surfaces.** Boilers shall also be regularly examined for deposits on their heating surfaces and for grease or other foreign matter in the water. Boilers showing any such irregularities should be cleared at the first opportunity and should not be used until cleared except in an emergency.

3. **Cleaning and Repairing**

a. **Adjusting Pressure.** Performing certain adjustments and repairs while pressure is up is prohibited. A complete absence of

pressure is to be insured by opening the air cock or test and water gage cocks connecting with the steam space:

(1) before fittings or parts subject to pressure are removed or tightened, and

(2) before manhole or handhole plate-fittings are loosened on a boiler which has been under pressure.

b. Permissible Adjustments. Combustion control, feed control, and burner, stoker, or similar adjustments are permitted with the boiler steaming, recognizing that many adjustments can only be made when pressure is up.

c. Personal Protective Equipment. When performing cleaning operations workers should wear the proper personal protective equipment.

(1) Hard hats and goggles should be worn.

(2) When a worker is chopping slag inside a furnace, a respirator should be worn.

(3) Safety-toe shoes or toe-guards should be worn to prevent injuries from falling slag.

d. Entering Furnace

(1) A worker shall not be allowed to enter a stoker-fired furnace until the stoker-motor control has been tagged with a "Hold" card.

(2) When a man is working inside the furnace, a large warning sign, such as CAUTION – MEN WORKING INSIDE, shall be place near the furnace entrance.

e. Open-Flame Lights. The use of open-flame lights is prohibited in boilers. When cleaning where flammable vapors and gases may be present, workers are to use only explosion-proof portable lamps equipped with heavily insulated 3-wire conductors, with one conductor connecting the guard to the ground.

f. Oil Accumulation. Any oil which has accumulated on furnace bottoms shall be cleaned out immediately.

g. Strainers. The fuel-oil suction and discharge strainers shall be cleaned at least every eight hours, and oftener if necessary.

h. Supervisor's Inspection. After cleaning and repairing operations have been completed and before removing warning signs and lockout tags, the supervisor in charge shall make a thorough inspection of the boiler. He must make certain that tools, scraps, and foreign materials have been removed and that work has been completed. He must determine that no member of the crew is inside the boiler before closing steam drains and headers.

4. Condensate Pits. Condensate pits in boiler rooms shall be provided with metal covers. Where it is necessary that such pits be open for maintenance, adequate guards shall be placed around them and warning signs posted.

0726. OPERATING PRECAUTIONS

1. Watch and Equipment Requirements

a. Equipment. Wear goggles with dark lenses, number 1.5 to 3 shade, and suitable fireproof face shields when working near or looking through furnace doors of boilers in operation.

b. Minimum Attendance of Boilers. The increased use of and improvements in the reliability of automatic boiler controls has greatly reduced the minimum attendance requirements of boilers. As technology advances, this trend is likely to continue. It is therefore impracticable to establish standard requirements applicable to all boiler installations. In lieu of standard requirements, there will be established for each boiler installation a *Bill of Attendance*. This Bill will identify the boiler installation and state in detail and in correct sequence the observations and adjustments to be made, the minimum frequency of such observations and adjustments, and who shall perform them. All such Bills shall be submitted to the cognizant District Public Works Officer for review and technical approval. The Public Works Officer and the District Public Works Officer shall give due consideration to the character and reliability of automatic control systems, operating conditions, and special hazards concerning each installation, and shall be guided by technical standards provided through Instructions issued by the Bureau of Yards and Docks.

c. **Watch.** No one shall stand a fireroom watch until he is thoroughly familiar with the precautions contained in this section.

2. **Firing**

a. **Damper.** Open the stack damper or operate the induced draft fan before starting a fire.

b. **Vents and Drains.** When firing a cold boiler be sure that the air vents are open on the boiler proper and that the drains are open on the superheater; these should be kept open until steam is liberated from the openings. Superheater vents must remain open until the boiler is on the line.

c. **Combustible Gases.** Be sure that gas-fired and oil-fired boilers, whether manual or automatic, are cleared of combustible gases after each false start.

d. **Use of Torch.** When lighting fires in furnaces in oil-fired, gas-fired or pulverized-fuel-fired boilers, use a torch for each burner. Never try to start fires from hot brick work, and do not attempt to light one burner from another.

e. **Rate of Firing.** Prevent overheating of boilers equipped with superheaters by firing at a slow rate during the warm-up period and allowing a small amount of steam to flow through the superheater.

3. **Water Level**

a. **Use of Gage.** When taking over a watch, blow the water gages and note the return of the water in the glass. Be certain of the water level at all times. Do not be misled by a dirt marking on the gage which may look like the surface of the water. Do not depend entirely upon automatic alarm devices and automatic feed-water regulators.

b. **Try Cock.** If there is any question about the water level use the try cock. One-half glass of water shall ordinarily be carried.

c. **Low Water.** If the water goes out of sight in the bottom of the gage glass, kill the fire, utilizing quickest means available, immediately close the steam stop valve, and allow the boiler to cool slowly; then drain the boiler completely and open it for inspection. *Do not feed cold water to a boiler that has had low water until the boiler has cooled.*

d. **Steam**

(1) Check the water on steaming boilers by try cocks at least once each watch and before connecting a boiler to the line.

(2) Blow down the water glasses before connecting a boiler to the line.

(3) Remember that a fall in steam pressure may indicate low water.

4. **Valves**

a. **Checking.** Check safety valves at frequent intervals to be sure they will pop at the correct pressure, as marked on the nameplate.

b. **Seal.** Do not break the seal of a safety valve or change its adjustment unless such action has been authorized.

c. **Weighting.** Never weight the pop valves or relief valves, etc., to increase the recommended steam pressure for which the boiler is approved.

5. **Oil**

a. **Oil and Water Mixture**

(1) Do not use oil from a tank in which a considerable amount of water is mixed with the oil unless a high suction connection is provided.

(2) When an atomizer sputters, shift the suction to the stand-by tank or another storage tank. A sputtering atomizer indicates water in the oil.

b. **Fouling.** Minimize the fouling of oil heaters by using as few heaters as possible. Recirculate the oil through the used heaters for a short time after securing the burners.

c. **Temperature.** Maintain the prescribed fuel-oil temperature; do not exceed it.

6. **Accidents**

a. **To Furnace Wall.** Cut out the boiler at once if a brick falls out of the furnace wall.

b. **Steam Leaks.** If a large steam leak occurs in a boiler, shut off the burners, feed water until the fire is out, close the steam stop valve, ease the safety valves, clear the furnace of gases, close the registers, and cool the boiler slowly.

7. **Adjusting Parts.** Do not tighten a nut, bolt, or pipe thread, nor strike any part, nor attempt to make any other adjustments to parts while the boiler is under steam or air pressure.

8. **Foreign Substances.** Exercise precautions to prevent lubricating oil, soap, or other foreign substances from getting into the boiler. Condensate from cleaning vats should be led to waste and not returned to the boiler.

9. **Closing Furnace.** Close the furnace openings as soon as all fires have been extinguished and the furnace has been cleared of gases.

10. **Unattended Boilers.** Where unattended boilers are in operation, boiler room doors should be provided with locks and kept locked during periods of nonattendance.

11. **Valve Pull Chains.** In shore installations the handles on pull chains to boiler water-gage cocks and water-gage glass stop valves shall be painted the following colors:

Opening water-gage glass stop valves. . . . . White
Closing water-gage glass stop valves . . . . . Red
Top gage cock . . . . . Yellow
Center gage cock . . . . . Green
Bottom gage cock . . . . . Blue

In the event of a broken gage glass the boiler operator will pull the chain or chains having red pull handles and shut off the flow of steam and hot water.

0727. FIRE PREVENTION

Detailed measures for the prevention and extinguishment of oil fires can be found in article 2015. In addition, the following precautions are emphasized:

1. Keep the joints on oil lines tight.

2. Do not permit oil to accumulate on the furnace bottoms or on fire-room floors.

3. Soot blowers shall be used as frequently as necessary to keep boiler surfaces which are exposed to fire and gases clean.

4. When fires are banked, make certain the draft is sufficient to carry off flammable gas accumulations.

5. Do not use water to extinguish an oil fire in the furnace.

6. In case of an oil fire in the boiler room, close the master fuel-oil valve and stop the oil pump.

MARINE BOILERS

0730. SHORE ACTIVITY SERVICED

Any work done on shipboard boilers by shore activity personnel shall be conducted in accordance with the safety precautions contained in NAVSHIPS 250-000, Bureau of Ships Technical Manual.

AIR RECEIVERS AND COMPRESSORS

(UNFIRED PRESSURE VESSELS)

0735. GENERAL REQUIREMENTS

1. **Design and Construction.** Unfired pressure vessels shall be designed in accordance with applicable codes of the American Society of Mechanical Engineers, the National Bureau of Standards, or Bureau of Yards and Docks Instruction 11012.67, *High Pressure Air Systems; Design Criteria No. 35*. When departure from these codes or criteria is considered essential, requests for changes shall be referred to the Bureau of Yards and docks with copies to cognizant technical and support bureaus and offices.

2. **Inspection and Testing**

a. **Fixed Systems.** Inspection and testing of unfired pressure vessels shall be accomplished in accordance with NAVDOCKS

P-322, *Inspection for Maintenance of Public Works and Public Utilities.*

b. Portable Equipment and Cylinders. Cylinders used for shipment of compressed or liquefied gases shall be inspected in accordance with regulations of the Interstate Commerce Commission (see article 2044). Although portable compressors, receivers, and other unfired pressure vessels having a volume less than 5 cubic feet are not specifically covered in *NAVDOCKS P-322*, such equipment shall be inspected and tested in accordance with the applicable principles of *NAVDOCKS P-322*, ASME codes, or the handbook of the particular item of equipment involved. Personnel trained and acquainted with the procedures and techniques of inspecting and testing unfired pressure vessels shall be utilized.

3. Torpedo Airflasks. Torpedo airflasks, although not designed in accordance with accepted standards (see paragraph 0730.1), are in use in fixed and portable systems throughout the Navy. The risks accepted in using these airflasks for combat purposes are not acceptable when they are used for other purposes. When they are used in fixed and portable systems in the Shore Establishment, working pressures and installation shall be modified in conformance with ASME standards, and inspection and testing shall be in accordance with instructions contained in *Ordnance Pamphlet 1806, High Pressure Air Systems Ashore – Design and Operation.*

0736. AIR RECEIVERS (COMPRESSED AIR TANKS)

1. Operating Pressure. Do not operate an air receiver at a pressure higher than the maximum allowable working pressure unless such operation has been specifically authorized.

2. Unauthorized Use of Compressed Air. Do not use compressed air to accelerate the flow from containers of oil, gasoline, or other fluids. This practice is dangerous to the operator and fellow workers and is prohibited.

3. Cleaning and Repairing

a. Never attempt to make repairs of any nature while the air receiver is under pressure.

b. Carefully observe precautions for cleaning air receivers. When air receivers are of sufficient size to admit a man through a manhole opening, the manhole covers should be completely removed. Adequate ventilation must be provided, and there must be no oxygen deficiency, no volatile gases, and no carbon monoxide present in dangerous quantities.

4. Condensate. The condensate blow socks should be open daily when the receiver is in use and all condensate drained and observed for the possible presence of oil.

0737. AIR COMPRESSORS

1. General Care

a. Be sure the air at intake is cool and free from flammable gases, vapors, or dusts.

b. Do not permit wood or other flammable materials to remain in contact with the air discharge pipe.

c. Immediately secure a compressor if the temperature of the air discharged from any stage rises unduly or exceeds 400° F.

d. Do not install a stop valve or check between the compressor and receiver unless a relief valve is also fitted between the compressor and the stop or check valve. (If the compressor is started against a closed valve or a defective check valve the air cannot escape and an explosion will result.)

e. Pressure gages shall never be rendered inoperative except when they are to be removed for some valid reason.

f. Never kink a hose to stop the air flow. Keep the clamps on the hose tight.

2. Starting and Running

a. When starting an air compressor check the safety valves, pressure valves, and regulators to determine that they are working properly.

b. Do not leave the compressor station after starting the compressor unless it has been made certain that the control, unloading, and governing devices are working properly.

c. Do not run an air compressor faster than the speed recommended by the manufacturer.

3. **Lubricating**

a. **Lubricate air compressors regularly.** Use only the proper grade oil as recommended by the manufacturer, and avoid the application of too much oil.

b. *Use only oils which have high flashpoints to lubricate the air cylinders of air compressors.*

4. **Cleaning**

a. Keep compressor, tanks, and accompanying piping clean to guard against oil-vapor explosion. Clean intake air filters periodically.

b. Use only soapy water or suitable non-toxic, nonflammable solution for cleaning compressor intake filters, cylinders, or air passages. Never use benzene, kerosene, or other light oils to clean these portions of a system. These oils vaporize easily and will form a highly explosive mixture under compression.

5. **Adjustment and Repair**

a. Turn off the motor before making adjustments and repairs on an air compressor.

b. Before working on or removing any part of a compressor make certain that the compressor is secured and cannot be started automatically or by accident, that air pressure in the compressor is completely relieved, and that all valves between the compressor and receivers are closed.

Chapter 8
CONSTRUCTION

GENERAL

0801. SCOPE

These requirements for personnel safety are designed to cover the dangerous conditions ordinarily experienced by personnel engaged in construction and maintenance work at naval shore activities and advanced bases. The *American Standards Association Safety Code for Building Construction,* A-10.2, contains additional safety rules for the various fields of activity which constitute the building construction industry. Public works officers and others responsible for the safety of personnel employed on construction and maintenance work should have a current copy of the code and be familiar with its provisions.

0802. DRINKING WATER

1. **Dispensing Methods.** Fresh and pure drinking water shall be supplied on every construction job. Drinking water will be obtained only from sources approved by the public works officer or the officer in charge of construction. Any one of the following dispensing methods shall be used:

a. Stationary bubbler with guarded orifice installed on an approved water line.

b. Fully enclosed water container and individual paper drinking cups.

c. Portable sanitary drinking fountains which meet current Federal specifications.

2. **Containers.** Dipping water out of any container by individual cup, dipper, canteen, or other utensil, is prohibited. Containers must be provided with a covering so designed and fastened as to prevent such use.

3. **Sterilization.** All containers used to furnish drinking water shall be thoroughly sterilized at least once a week, or more frequently if circumstances require, by methods approved by medical authorities.

0803. TEMPORARY TOILET FACILITIES

1. **Number Required.** For every 30 persons or less a privy or closet space shall be provided.

2. **Privacy.** It shall be constructed so that the occupant thereof will be shielded from view and protected against the weather and falling objects.

3. **Location.** Privies shall be located so as not to contaminate any domestic water supply used for drinking purposes.

4. **Drainage.** They should be so located and banked that surface water cannot flood the pit.

5. **Trough.** Each privy shall be provided with an adequate urinal trough.

6. **Sewer connections.** If sewers are available, connections shall be made at once, flush tank closets installed, and running water provided to keep the closet flushed.

7. **Pit Latrines.** At locations where neither a water carriage sewerage system nor chemical toilet is available, the privy or closet space shall contain a fly-tight box constructed over a pit latrine or over pails, or other suitable containers, where pits are impracticable.

8. **Sanitary Requirements.** Care shall be taken to see that all buildings used as temporary toilets are kept in a clean and sanitary condition. The toilet seats should be scrubbed daily with soap and water, and washed off at least twice a week with an antiseptic solution.

0804. FIRST-AID STATIONS

1. **Treatment Facilities.** Where medical facilities are not available at a shore activ-

564-350 O - 74 - 8

ity, a first-aid station or stations equipped with medicines and supplies common to first-aid treatment shall be established on each project at the beginning of operations and maintained for the duration of the job. On all projects employing fewer than 100 workers, 16-unit first-aid kits shall be provided in the ratio of one for each 25 persons employed and these kits shall be maintained with all the standard medicines and remedies.

2. **Reporting Accidents.** Workmen shall report all accidents, no matter how trivial. Minor injuries, when neglected, produce most of the infection cases. All injuries shall be given first aid or medical attention immediately.

3. **Qualified Personnel.** First-aid care shall be administered under the direction of a qualified person, a registered nurse, or a licensed physician.

0805. PERSONAL PROTECTION

1. **Clothing and Equipment.** According to the type of work being done, employees shall be required to wear chipper's goggles, welder's goggles, welder's shields, hard hats, safety shoes, rubber boots, safety belts, lifelines, life nets, life preservers or jackets, respirators, and other such protective equipment or clothing.

2. **Sterilization.** Personal protective equipment shall be properly cleaned and sterilized before being issued to employees.

0806. LIGHTING

1. **Where Required.** Stairways, corridors, passageways, railroad crossings, excavations, piled materials or obstructions, and working areas shall be kept adequately lighted while work is in progress.

2. **When Required.** Where working conditions require the use of artificial lighting it shall be maintained after a shift until workmen have had an opportunity to leave the premises.

3. **Outdoor Operation.** Outdoor operations shall be adequately illuminated at night (see article 0213).

0807. GAS AND SMOKE

1. **Escaping Gas.** No method of heating shall be used which releases smoke or gas within an enclosure where workers are employed.

2. **Authorization.** No fire or open flame device shall be permitted on a project without the approval of the supervisor or person in charge.

3. **Pipes and Stoves.** Where smoke pipes from stoves or other heating apparatus pass through combustible walls or roofs, proper insulating thimbles shall be provided. All stoves and other heating apparatus shall be mounted on incombustible bases and have proper fire protection at the rear and sides. See NAVDOCKS DM-8, *Fire Protection and Fire Prevention.*

0808. SALAMANDERS

The use of salamanders is to be discouraged. When they are used, however, constant attention must be given to fires and the following precautions must be strictly observed:

1. **Foundation.** Salamanders used in buildings shall be installed on a firm foundation and combustible floors shall be properly protected.

2. **Cover.** Salamanders must be properly covered with a sheet-metal hood and the exhaust piped to the outside air.

3. **Clearance.** Combustible walls should have at least three feet clearance; where the pipe goes through the roof or walls there shall be a nine-inch clearance to combustible material. The use of ventilating thimbles or cold shield pipes is recommended.

4. **Used Outdoors.** Salamanders used outdoors should be set directly on the ground; they need not be covered.

5. **Used in Enclosed Spaces.** When salamanders are used in enclosed spaces, proper tests for carbon monoxide should be made and such areas freed of any toxic gases and fumes before workmen are permitted to enter.

6. Solid Fuel. Only solid fuel salamanders shall be used. The use of oil-fired salamanders is limited to extreme emergency conditions.

7. Moving or Refueling. When oil-fired salamanders are permitted they shall be shut down before being moved or refueled.

8. Liquid Fuel. Fires in salamanders shall never be started with gasoline, kerosene, or other flammable liquids.

9. Under Tarpaulins. Where salamanders are used for protection of concrete against freezing and the area is enclosed with tarpaulins or canvas, extreme care is required to prevent contact of salamanders with such materials.

0809. ELECTRIC WIRING AND EQUIPMENT

1. General. Temporary electric wiring and equipment shall be installed and maintained by competent and qualified workmen so as to effectively protect all persons against injury therefrom. Permanent installation should be in accordance with the National Electrical Code. See Chapter 15 Electricity and Electronics.

2. Grounding Equipment. Electrical equipment shall be grounded in accordance with requirements of Chapter 15.

3. Insulation Mats. Suitable insulating mats or platforms of substantial construction providing good footing shall be provided and so placed that operators or persons in the vicinity of machines or equipment having exposed live parts of more than 30 volts, cannot readily touch such parts unless standing on these mats or platforms, or on the insulating floor.

4. Extension Cords. Extension cords of lights and electrically operated tools or devices, together with their connections and fittings, should be of a superior quality. They shall be inspected frequently and be maintained in a safe condition. All extension cords shall be kept dry and free from oil or grease..

5. Switches. Underwriters' Laboratories approved safety-type switches shall be installed for all equipment, and the enclosures shall be grounded.

6. Fuses or Circuit Breakers. All circuits shall be fused or equipped with circuit breakers rated in accordance with the tables of the National Electrical Code. By-passing of circuit breaking devices is prohibited.

7. Deenergizing Circuit. Whenever work of any nature is to be performed on electrical equipment or circuits, all circuits and equipment should be deenergized and grounded. (Procedures prescribed in Chapter 15 shall apply.)

8. Hot Line Work. When workers are required to perform work on circuits which cannot be deenergized, such workers shall be fully qualified to perform hot-line work and they shall comply with procedures prescribed in chapter 15.

9. Explosive Gases. Special fixtures designed for hazardous atmospheres shall be used in locations where explosive gases or dust may be encountered.

10. High Voltage Wiring

a. Qualified Personnel. All work on electrical wiring and equipment carrying high voltage shall be performed by men competent and qualified in high voltage installations.

b. Instruction of Personnel. Workmen assigned to work on or in close proximity to electrical installations shall be given specific instructions on the work to be performed and the hazards associated therewith.

c. Warning Signals. High voltage lines erected for construction purposes, shall carry appropriate warning signals at all locations where equipment is operated, or where persons may come in close proximity thereto.

d. Wiring Diagrams. Wiring diagrams shall be prominently displayed in transformer rooms, switching stations, and other such installations.

e. Temporary Installation. Temporary wiring used in tanks, cofferdams, or other

confined spaces shall be equipped with an approved type safety-switch for cutting off the current in emergencies and such switch should be located at the entrance to such space. The enclosure of such switch shall be grounded.

0810. HANDLING AND STORING MATERIALS

1. General

a. Stacking In Tiers. All material in bags, containers, or bundles, and other material stored in tiers shall be stacked, blocked, interlocked, and limited in height so that it will be stable and otherwise safe against sliding or collapse.

b. Inside Storing. Material stored inside buildings under construction shall not be placed within six feet of any hoistway or floor opening, nor on any floor above the ground within ten feet of the outside of the building, unless the exterior walls extend above the top of the storage pile, in which case the minimum distance shall be six feet. Material shall not be stacked against interior columns or roof supports. Floors shall be shored if material stored is heavier than the flooring will support.

c. Public Thoroughfare Storage. When any material is stored in public thoroughfares, it shall be located so as to present the least possible hazard to the public or interference with traffic.

d. Barricades

(1) Day. The material shall be protected against being hit or knocked over by trucks or other passing vehicles by means of barricades and red flags during daylight hours.

(2) Night. The material shall be guarded at night by barricades and an adequate number of red lights located at conspicuous points.

e. Lifting. When handling materials by hand, workmen should always use the leg muscles in lifting, never the back. Help should be obtained if the load is too heavy or too clumsy to be handled by one man.

2. Piling Lumber

a. Gloves. Men piling lumber shall always wear leather gloves.

b. Timber Sills. All lumber shall be piled on timber sills to prevent direct contact between stored lumber and the ground. Sills shall be level and solidly supported.

c. Stacks. Lumber shall be so piled as to be safe against falling. The height of the pile shall not exceed 16 feet. The width of piles shall not be less than one-fourth the height. When unpiling, each tier shall be completely unpiled before beginning another.

d. Cross Strips. Cross strips shall be placed in piles which are stacked more than 4 feet high.

e. Projecting Nails. Used lumber shall have all projecting nails withdrawn before it is piled, unless it is burned without further handling.

3. Cement and Lime

a. Protective Apparel. Men handling cement and lime bags shall wear goggles. They shall always wear snug-fitting neck and wrist bands.

b. Protection of Skin. Men shall report any susceptibility of their skin to cement and lime burns. They shall make use of a suitable hand cream where its use will prevent burns. They shall always practice personal cleanliness. They shall not wear clothing that has become hard and stiff with cement. Such clothing irritates the skin and may cause serious infection. Men who are allergic to cement and lime should be transferred to other jobs.

c. Height of Stack. Bags of cement and lime should not be piled more than 10 bags high except when stored in bins or enclosures built for such purposes.

d. Direction of Bag Openings. The bags around the outside of the piles shall be placed with the mouths of the bags facing the center.

e. Setting-Back Tiers. To prevent piled bags from falling outward, the first 5 tiers of bags each way from any corner shall be crosspiled and a set-back made commencing with the sixth tier. If necessary to pile above the tenth tier, another set-back shall be made.

f. Back Tier. The back tier, when not resting against a wall of sufficient strength

to withstand the pressure, should be stepped back one bag every five tiers, the same as the end tiers.

g. **Unpiling.** During unpiling, the entire top of the pile shall be kept level and the necessary step-backs every 5 tiers maintained.

h. **Lime Storage.** Lime shall be stored in a dry place to prevent a premature slaking action that may cause fire.

4. **Brick**

a. **Piled On Even Surface.** Brick shall never be piled directly on uneven or soft ground but shall always be stacked on planks.

b. **On Scaffolds.** Brick shall never be stored on scaffolds or runways. This shall not prohibit normal supplies on bricklayers' scaffolds during actual bricklaying operations.

c. **Height of Piles.** Except where stacked in sheds, brick piles shall never be more than 7 feet high.

d. **Tapering the Stack.** When a pile of brick reaches a height of 4 feet it shall be tapered back 1 inch in every foot of height above the 4 foot level.

e. **Unpiling.** The tops of brick piles shall be kept level and the taper maintained during unpiling operations.

5. **Masonry Block and Hollow Tile**

a. **Level Surfaces.** Blocks shall always be stacked in tiers on solid, level surfaces.

b. **Height of Stacks.** Stacked piles shall be limited to a height of 6 feet whenever possible. When blocks are stacked higher than 6 feet the pile shall be stepped back, braced, and propped, or wood strips placed between tiers to prevent the pile from toppling.

c. **Lowering Blocks.** Blocks shall not be dropped or thrown from an elevation or delivered through fully enclosed chutes.

6. **Reinforcing and Structural Steel**

a. **Gloves.** Men handling reinforcing steel shall wear leather gloves.

b. **Bending Steel.** Bending of reinforcing steel on the job shall be done on substantial benches secured against tipping. Benches shall be located on nonslippery level surfaces.

c. **Piling Steel.** Structural steel shall be carefully piled to prevent sliding or tipping over. If there is danger of tipping over, I-beams shall be stored with webs horizontal.

7. **Corrugated and Flat Iron.** Corrugated and flat iron shall be stacked in piles not more than 4 feet high. Spacing strips shall be placed between bundles. On permanent installations, this material may be stacked vertically or at a slight incline to the vertical, provided such stacking is in substantial racks of steel or concrete of an approved design.

8. **Pipe**

a. **To Prevent Spreading.** Pipe of all kinds shall be stacked in such a way as to prevent the stack from spreading.

b. **Approach From End Of Pile.** In removing pipe larger than two inches in diameter from storage piles which are more than one pipe high and run in the same direction, workmen shall approach the pile from the ends and not from the sides.

c. **Size of Pile.** If piled, sewer pipe shall be segregated by sizes, and the height of any pile shall not exceed 5 feet.

9. **Sand, Gravel, and Crushed Stone**

a. **Overhang.** In withdrawing sand, gravel, and crushed stone from frozen stock piles, no overhang shall be permitted at any time.

b. **Protection of Walls.** Material should not be dumped against walls or partitions. When this must be done, it should not be stored to a height that will endanger the stability of such walls and partitions.

c. **Lifelines.** When men are required to work in hoppers or on high piles of loose material they should be equipped with safety belts and lifelines having no more than 2 feet of slack.

0811. WHEELBARROWS

1. **Handles.** Wheelbarrows with cracked or broken handles shall not be used.

2. **Wheels.** Twisted and out-of-round wheels shall be repaired or discarded.

3. **Knuckle Guards.** When wheelbarrows are used in narrow passageways, gloves or knuckle guards should be used.

4. **Balancing Load.** Wheelbarrow loads shall be balanced carefully with the center of the weight placed well forward to save lifting strain.

5. **Lifting With Leg Muscles.** When picking up a loaded wheelbarrow, the knees should be bent and the lifting done with the leg muscles.

6. **Pulling Prohibited.** Wheelbarrows shall always be pushed, *not pulled.*

7. **Running.** Workmen shall never run with empty wheelbarrows in an upright position. This practice leads to serious injury from stumbling and falling.

8. **Overloading.** Wheelbarrows should not be overloaded, especially when used on ramps.

9. **Leaving in Hazardous Spot.** Wheelbarrows shall never be left in such a position that they can readily tip over or fall or shall never be left where persons or traffic can run into them.

0812. LADDERS AND SCAFFOLDS

(See articles 0835 and 0836)

0813. FLAMMABLE LIQUIDS AND FIRE PREVENTION

Precautions pertaining to the handling and storage of gasoline and other flammable liquids are contained in Chapter 20. See article 0205 for general provisions on fire prevention.

0814. CONCRETE CONSTRUCTION

1. Form Building and Erection

a. **Housekeeping.** Good housekeeping shall be observed at each new concrete structure. Materials and tools shall be kept picked up, and special care shall be taken that no boards with protruding nails are allowed to lie around.

b. **Protective Apparel.** All workmen placing concrete shall wear protective hats whenever the hazard of overhead falling objects exists. Shirt sleeves should be rolled down, gloves should be worn, and every reasonable precaution taken to keep cement and concrete off the skin. Men required to stand in fresh concrete shall be provided with watertight boots.

c. **Safety Belts.** Men placing reinforcing steel where there is a falling hazard shall be equipped with lifelines and safety belts.

d. **Supports.** While concreting there should be one carpenter, or more if necessary, assigned to tighten wedges and to see that centering supports are not in danger of collapsing. Mud sills should be used on all shoring that rests on the ground, and shoring should be properly placed.

e. **Temporary Scaffolds.** Before decking has been put in place on joists, temporary scaffolding shall be erected as necessary to enable men to work safely. Workmen must be particularly careful not to walk out on cantilevered members of the form framing.

f. **Column Forms.** Men erecting column forms shall always install back braces and side braces so as to prevent any movement out and away from the building. They shall also use heavy tie-wire to tie in the tops of wood column forms to the slab-reinforcing steel.

g. **Beam Forms.** When the outside beam forms are in place, a continuous length of 3/4-inch manila rope shall be run from one set of column dowels to the next set at the outside of the building.

h. **Raising Column Forms.** When outside column forms are being raised from one floor level to another floor level, the area below the place where the column forms are being raised should be roped off.

i. **Bracing Shores.** In the setting of shores, all horizontal bracing should tie in all shores with the adjacent ones.

j. **Wheelbarrows.** Precautions to be observed by workmen using wheelbarrows will be found in article 0811.

2. Form Stripping.

a. **Keeping Away from Area.** Only men actually engaged in stripping work should be allowed in areas where stripping is being done.

b. Concrete Must Be Set. Forms should not be removed prematurely; be sure that the concrete is properly set and that it is not frozen.

c. Supports for Forms. Before stripping, beam forms should be well supported by shoring.

d. Form Panels. When large panels are removed or handled by power equipment, rope tag lines should be fastened to the form panels to prevent the wind from swinging them against the men.

e. Cutting Tie Wires. When tie wires under tension are being cut, care should be taken to prevent a backlash which might hit the body, especially the face, eyes, or throat. Hammer and chisel shall not be used to cut tie wires.

f. Cleaning Lumber. Stripped lumber should be removed at once to a separate pile, then cleaned and all nails removed.

g. Protective Apparel. Workmen cleaning stripped lumber should wear heavy leather gloves and heavy soled safety shoes which are in good condition.

3. Spouting

a. Towers and Chutes. Where towers and chutes are used they should be strongly built by men experienced in this work. They should be checked daily and kept in good repair.

b. Tripods. Tripods should be solidly built, using strong material.

c. Guy Wires. Spouts should be guyed so they cannot sway in the wind.

d. Cleaning. Spouts should be cleaned out at the end of each run of concrete.

e. Barricades. Spaces below spouts should be barricaded to keep people or workmen out of areas where they might be injured by falling concrete.

4. Runways

a. Construction. Runways shall be strongly built, evenly supported, and have a smooth-running surface of sufficient width to prevent buggies from running off.

b. Support of Forms. Forms directly under runways should have extra supports.

c. Railings. Runways that are used for workmen's access shall have standard railings on open sides to protect the workmen.

d. Slope. Runways shall be built with such a slope that men will not slip. Cleats should be fastened to sloping runways when the incline exceeds one foot rise in a five foot run.

e. Keeping Clean. Runways shall be kept free of loose materials, ice, snow, grease, mud, and other causes of insecure footing.

5. Mixing and Placing Concrete

a. Tripping Over Tools. Tools such as shovels and hoes shall be placed where workmen will not trip over them or bump into them. The mortar box shall be placed clear of workmen's access ways.

b. Batching Truck. Workmen must make sure that the dry batch truck does not back up and pin them between the skip and the truck, or run them down. Dry batch truck drivers must exercise special care in backing up to the mixer skip to avoid injuring workmen around the skip. The driver should back up to the skip only on signal from the mixer operator or the skipman.

c. Catching Clothing in Moving Parts. Workmen must be careful not to get too near to moving parts, like revolving drums, cables, etc., thereby running the risk of their clothing being caught and drawing them into the machinery.

d. Dumping Load. When a mixer dumps a load of concrete into a bucket, care must be taken to see that the bucket gate is closed. Cables should be checked for defects to prevent the load being dropped.

e. Guards in Place. Pipe skip guards and safety chains on the paver must be kept in place.

f. Standing Under Skips. Every precaution must be taken to prevent people from standing or passing under a raised skip.

6. Concrete Buggies

a. Keep Clean. Concrete buggies shall be kept clean and in good repair.

b. Handles Guarded. The handles of concrete buggies should not extend beyond the wheels of either side. The handles of

buggies should be equipped with knuckle guards.

c. **Stop Cleats for Dumping.** Stop cleats should be used at all places where buggies are dumping material.

d. **Balancing Load.** Loose weights should not be hung on the handles of buggies to act as counter balances; the load should be trimmed if possible. If weights become necessary, they shall be securely fastened to the handles.

e. **Moving Load of Concrete.** Workmen should not try to move too heavy a load of concrete, nor try to wheel a load over ramps that are insecure, narrow, or rough.

f. **Danger of Backing Trucks.** Workmen using buggies around concrete mixers shall be alert to see that a truck does not back up and pin them between the mixer and the truck.

0815. STEEL ERECTION

1. General

a. **Protective Apparel.** Workmen employed on steel erection operations shall wear protective hats at all times. They should wear safety shoes, gloves, and overalls without cuffs. They should wear safety belts when working 12 feet or more above the floor, and at all times when working over water or doing repair work on a ship's sides.

b. **Goggles.** Goggles of approved type shall be worn by workmen employed in cutting out rivets, caulking, burning, grinding, chipping, or similar operations.

c. **Welding.** Welding operations shall be shielded or screened when necessary for the safety of the workmen or others in the vicinity.

d. **Fresh Paint.** Workmen shall not work on steel members which have been freshly painted.

e. **Hoisting Material.** Material shall not be hoisted to a structure until it is ready to be put into position and fastened.

f. **Load Falls.** There shall be at least two parts in the load falls used in steel erection.

g. **Steel Cables.** Steel cables shall be used on all loads in steel erection. When hoisting steel a tag line should be attached to guide the load until it reaches the level where it is to be erected.

h. **Bolting Steel.** In setting steel, each piece shall be securely bolted before the line is taken off.

i. **Hoisting Workmen.** Workmen shall not be lowered or hoisted in tackle or runner lines or on a lead.

j. **Temporary Wiring.** Particular care shall be taken in the stringing of any temporary electric wiring which comes in contact with the steel. Wire with defective insulation shall not be used.

k. **Keep Tools in Boxes.** All rivets, bolts, nuts, dollies, wrenches, other tools, and other loose articles shall be kept in kegs or boxes so that vibration will not cause them to creep and fall through or over the edge of planking. All boards, planks, kegs, and other loose material shall be secured before leaving the job.

2. Riveting

a. **Throwing.** Hot rivets shall never be thrown across shaftways or toward the outside of a building. When riveting is done on outside walls, the rivets shall be passed by hand or thrown parallel to the wall.

b. **Catching.** Rivet catchers should use cone shaped buckets, pails, or cans of durable construction with wooden bottoms.

c. **Slings for Dollies.** Canvas, leather, or rope slings should be used for riveting dollies. Chain slings should not be used. The wire attachment on the rivet gun should not be allowed to become worn so that it may allow the tool to fly with the air pressure.

d. **Rivet Heaters.** A pail of water for fire extinguishing shall be kept at every rivet heater.

e. **Floor Requirements.** The riveting gangs and painters shall have a fully planked floor not more than two stories below them.

f. **Erection Ahead of Riveting.** When the columns are two or more stories in height the erection gang shall not be more than four stories above the riveting gangs. Where the column splices are at every story the distance between the erection gang and the riveting gangs shall not be more than two stories.

3. **Working Floors**

a. **Temporary Floors.** The working floor, i.e., the floor on which the structural steel is being erected, shall be planked over solidly. The planking shall not be less than two inches thick (nominal thickness) and shall be laid close, so that nuts and bolts cannot slip through. The overlap shall be four inches or more. The planks shall be placed so they cannot tip under the weight of the worker at any point and so secured that they cannot slip out of place. All planking shall be sound, good quality material.

b. **Loading Temporary Floors.** All steel members deposited on temporary flooring shall be distributed so as not to exceed the safe carrying capacity of the floor.

c. **Permanent Floors.** In structural steel buildings the permanent floor construction shall be put in as the building progresses, and as closely behind the erecting, riveting, and painting as may be practicable. In no case shall the steel erection be more than eight stories above the uppermost permanent floor filling.

4. **Safety Nets.** Where it is impracticable to provide temporary floors on structures, as in theaters, auditoriums, and other such large open areas, rope nets shall be suspended below the points where men are working, or safety belts and lifelines (with a maximum slack of 4 feet) shall be provided to keep workmen from falling.

WEIGHT HANDLING AND CONSTRUCTION EQUIPMENT

0820. OPERATING RULES

1. **Definition and Scope**

a. **Equipment.** "Weight-handling Equipment (Heavy)" as referred to in this section, includes crawler and motor drawn cranes, gantry cranes, portal cranes, tower cranes, hammerhead cranes, overhead traveling cranes, floating and wall cranes, locomotive cranes, derricks, hoists and elevators, and crushing, mixing, batching, and paving equipment. It does not include fork lifts, straddle carriers, and pallet trucks; for safety precautions covering the operation of such equipment, see Chapter 3.

b. **Transportation Equipment.** Precautions for railroad and automotive equipment are to be found in Chapter 5.

2. **Principal Causes of Accidents**

a. **Personnel.** About 80 percent of all accidents involving equipment used in construction work and weight-handling are caused by unsafe practices of operating, maintenance, and other personnel involved in the operation of the equipment. It is possible for these personnel to perform their tasks on or about the equipment in an unsafe manner many times over a long period without accident. Eventually they become convinced that their unsafe practices actually are safe. Inevitably, their continued violation of the safety rules results in accidents. The body of safety rules in this field has been developed through the investigation and analysis of thousands of accidents. Full compliance with the rules is essential.

b. **Unsafe Practices.** The predominant unsafe practices and hazardous conditions in the operation of heavy construction equipment are listed below. Operators of all such equipment should study this list carefully, noting particularly the hazards connected with their own work. They should also heed seriously the instructions and warnings of their supervisors regarding safe practices to be followed during operation, making every effort to avoid accidents from any of these 14 major causes:

(1) backing and turning machines, swinging booms, lowering buckets, and performing similar operations without looking, warning, or signaling;

(2) getting on and off equipment carelessly while it is in operation, or riding equipment when not authorized to do so;

(3) operating equipment with defective brakes, clutches, cables, or other improperly functioning parts;

(4) working or walking under skips, buckets, or loads;

(5) failing to adjust controls properly before attempting to crank an engine;

(6) oiling, adjusting, or repairing equipment while it is in operation;

(7) using equipment with unguarded or inadequately guarded engine fans and other dangerous moving parts;

(8) failing to use personal protective devices or clothing such as goggles, safety shoes, gloves, and hard hats;

(9) failing to properly block equipment or heavy parts while repairing equipment;

(10) operating equipment in a thoughtless or unsafe manner, such as moving too fast over rough ground or working too near the edge of a soft fill;

(11) operating cranes too close to power lines without adequate watches and supervision;

(12) failing to secure equipment, brakes, booms, and movable parts before repairing, leaving, or moving the machine;

(13) poor housekeeping either on the equipment itself or in the operating area;

(14) overloading the equipment.

3. **Operation**

a. **Qualification of Operators.** Operators of construction and weight-handling equipment shall be tested and licensed in accordance with the applicable requirements of NAVDOCKS P-306, *Testing and Licensing of Construction Equipment Operators.* An apprentice or license applicant shall operate equipment only under the direct supervision of a licensed operator.

b. **Physical Fitness.** An operator who is not physically able or mentally alert shall not be permitted to start work with any piece of equipment.

c. **Inspection.** A frequent and regular inspection should be made of all machines. A well-maintained machine is usually a safe machine. All controls such as steering mechanism, brakes, and operating clutches shall be tested by the operator before any work is begun on a new shift. If any of these do not operate properly, they should be adjusted or repaired before any work is begun.

d. **Grease.** Good housekeeping is a prime necessity for safe and efficient operation. An accumulation of grease on a machine can cause falls and invites fires.

e. **Refueling.** Gasoline or diesel-operated equipment shall never be refueled while it is in operation. Frequent inspection of fuel lines and tanks for leaks will prevent fires as well as loss of fuel.

f. **Gasoline Safety Cans.** When transsporting gasoline from general supply to equipment in 5-gallon quantities, safety cans shall be used. If tank truck service is not available, gasoline in quantities in excess of 5 gallons shall be transported in steel drums. All bungs shall be tight, and the drum itself checked for soundness. When dispensing gasoline from drums an approved pump should be used.

g. **Leaving Machine.** An operator shall never leave his machine while the engine is running.

h. **Interrupting Work.** Upon completion of a work shift, the bucket, dozer blade, etc., shall be rested on the ground, and the brakes and clutches set as recommended by the manufacturer.

i. **Guarded Parts.** All belts, gears, shafts, clutches, drums, fly-wheels, chains, and other reciprocating or rotating equipment parts shall be adequately guarded.

j. **Removing Guards.** Guards, safety appliances, or any other safety devices shall not be removed or made ineffective except for the purpose of making adjustments or repairs, and then only after the power has been shut off. These guards and devices must be replaced immediately after completion of the needed repairs and adjustments.

k. **Adjusting Machines.** No one shall ever attempt to repair, clean, oil, or grease any part of the equipment while it is in motion.

l. **Signals.** Adequate warning devices and signals shall be installed on all mobile equipment.

m. **Lighting.** Adequate illumination must be provided for any night operation. (see article 0213)

n. **Designated Use of Machine.** The use of a machine for any purpose other than on the work for which it was designed is both unsafe and inefficient and is prohibited.

o. Color Code. All Navy construction, fire fighting, railroad, utility, and weight-handling equipment shall be painted in accordance with the instructions contained in NAVDOCKS P-309, *The Application of Color to Shore Establishment.* District Public Works Officers shall see that all such equipment under their control is painted to meet the accident-prevention standards of that publication.

4. **Signals**

a. Identification of Signalman. Only one person should be designated as signalman, and both he and the machine operator shall be entirely familiar with the standard hand signals. Where possible, the signalman shall be provided some distinguishing article of dress, such as a brightly colored helmet. He must be in a position to closely observe the load and the workmen or intermediate signalman, and still be in plain sight of the operator at all times.

b. Standard Signals. The signal system in *American Standards Association Safety Code for Cranes, Derricks, and Hoists* (ASA B30.2-1943) shall be understood and used by all riggers and crane operators.

c. Emergency Stop. A 'STOP' signal may be given by any person and shall be obeyed by the operator.

d. Signaling Lift. The signalman is responsible for making sure that members of the crew remove their hands from slings, hooks, and loads before giving a signal. He shall also make sure that all persons are clear of bights and snatch block lines.

5. **Riggers' Rules**

a. Riggers' Safety Apparel. All riggers shall wear protective hats that meet current specifications in use by the Navy. Hats should be yellow so that operators can readily identify the rigging crew. They should also wear gloves, heavy work shirts with rolled down sleeves, or jackets, to protect arms and torso from contact with slings.

b. Safe Methods. Riggers and others using slings to attach lifts to hoisting equipment should use only the approved safe methods for properly fastening the slings to the load and to the hook. Only experienced men shall do this work. There must be no question about the load being secured against slipping. The load shall always be carefully calculated in advance and no attempt shall ever be made to lift a load greater than the rated capacity of the crane.

c. Rigging and Hooking Load

(1) Cylindrical Loads. While lifting loads such as shafting, by strap, chain, or wire rope wrapped around the load, the wrapping must be given at least two turns around the object.

(2) Point of hook. A load shall never be carried on the point of a hook.

(3) Closed hook. The rigging of a box, brow, or staging for the purpose of lifting or otherwise moving personnel shall be done only at the express direction of the master rigger. A safety type or closed hook must be used. In emergencies, the hook may be moused.

(4) Compressed Gas Cylinder Lifts. Magnets or slings shall not be used in lifting compressed gas cylinders. A cradle or platform shall be used to hold the cylinders.

(5) Alligator Clamps. Alligator clamps shall not be used in areas where personnel are engaged in other work in the near vicinity.

(6) Box Hooks. Box hooks are prohibited except for raising loads to a height sufficient to enable placement of slings or dunnage.

(7) Improvised clamps. Improvised clamps shall not be used at any time without express permission of the master rigger given immediately prior to performing the work.

(8) "Chocking load." When "chocking" a load, place the shackle so the pin will ride in the eye of the pendant, but not in the standing part, so the pin will not unscrew.

(9) Multiple loads. Two or more separately rigged loads shall not be hoisted in a single lift even though the total load may be well within the load capacity of the crane.

(10) Knots and kinks. The rigger in charge is responsible for seeing that chains or wire ropes are not kinked or knotted.

(11) Hoist block. Never make a hitch with chain or wire rope on the hoist block.

(12) Dragging rigging gear. Chains or slings will not be permitted to dangle or drag under loads.

d. Hoisting Load

(1) Balanced load. Before hoisting, the rigger in charge shall make sure the load is balanced in the sling.

(2) Vertical hoist line. Before making the lift the rigger in charge shall see that the upper block is directly over the load to avoid swinging.

(3) Observing the load. The signalman shall keep his eye on the load as it is hoisted to see that nothing fouls.

(4) Kinks. If a kink is noted in a chain, the load must be lowered and the kink removed.

(5) Travel. When cranes are being used to make a lift, the position of the boom shall not be altered nor shall the load be raised or lowered while travel is being accomplished.

(6) Tag lines. Tag lines shall be used to guide lifts whenever there is a possibility of the load moving out of control. Tag lines shall be of adequate length and shall be kept free of loops and knots.

(7) Secure loose parts. Before hoisting the load, it shall be inspected and loose parts or other loose objects secured before hoisting.

e. Men Under Boom or Suspended Load. All personnel shall be cleared from areas near or under the boom or suspended load, except that if the master rigger decides the only possible way to perform the job is to have a man or men under the suspended load he may authorize such action. The master rigger shall personally inspect the site before giving such authorization. Riggers may be near the area under the boom or load but whenever possible they should move well clear when a strain is taken on the hoist line.

It should be realized that if a boom fails it will usually swing some distance laterally rather than falling straight down. It is therefore not adequate to merely clear personnel from the area directly under the boom or load. They must be cleared from areas to either side as well. The operator and the riggers are expected to use good judgment in deciding the extent of the area which should be cleared of personnel.

f. Riding the Load. No one will be permitted to ride the load without express authorization of the master rigger. He shall determine the necessity for and require the use of safety belts and life lines or other special precautions in such cases.

g. Riding Block or Hook. No one shall be permitted to ride the hoist block or hook.

h. Hook Capacity. The rigger in charge shall know the load capacity of the hook and shall see that such capacity is not exceeded.

i. Side Pulls. Cranes shall not be used to make side pulls; nor shall they be used with a snatch block to pull such objects as railroad cars where the actual load cannot be known.

j. Walking Under Load. Except as provided in subparagraph e above no one will be permitted to stand or walk under a suspended load. If necessary, a watch will be posted to warn personnel away.

k. Barricades. When making lifts in areas where vehicles or personnel are likely to enter, the area will be roped off or otherwise barricaded and signs or a watch will be posted.

l. Walking Ahead of Load. Chainmen or hookers shall walk ahead of load being carried to see that obstructions and personnel are cleared away before the load passes over. They shall walk ahead and to one side rather than in the path of the load.

m. Landing Loads.

(1) Clearances. Loads shall not be landed and left closer than 4′8″ from the outside rail of a railroad or crane track nor within distances from buildings, fire hydrants, hose houses, fire alarm boxes, or other facilities, as specified in NAVDOCKS DM-8. An open passage shall be left at all times so fire protection equipment can be reached and brought into use when needed.

(2) On vehicles. Whenever materials are being loaded or unloaded from any vehicle by crane, the vehicle operators and all other persons except the rigging crew

shall remove themselves from the vehicle and keep clear.

(3) Dunnage and shoring. Whenever materials are landed in work or storage areas, by crane, necessary dunnage or shoring shall be provided to prevent tipping or shifting of such materials.

(4) Spreading. Caution shall be used in landing loads such as bundled or bagged materials since they may spread.

(5) Withdrawing slings. When withdrawing slings from underneath a load, riggers should exercise caution to prevent the slings from flying loose and striking someone or catching and tipping the load.

n. Defective Rigging Gear. When the rigging supervisor or rigger in charge is informed or otherwise discovers that rigging gear is defective, he shall have it removed from service and returned to the shop for repair and test or replacement.

o. Small Materials Load. When handling bundles of small materials, extra care should be taken to see that all parts are secured. Wherever possible place small pieces in a "skip-box."

p. Sharp Corners. Slings shall be given protection (pieces of rounded wood, heavy bagging, or old rubber tires) on sharp corners, especially in cases where the sling might slide.

q. Keeping Clear of Crane and Hooks. Riggers, as well as other personnel, must be continually warned to keep clear of cranes to avoid the possibility of being crushed between stationary objects and the rear end of cranes. Riggers should be especially careful to keep clear of swinging hooks.

r. Maximum Capacity Loads. Extra care shall be taken when handling near maximum capacity loads for a given radius. All rigging crew members shall be informed when this condition exists.

s. Dragging Gear. Rigging gear should not be dragged across the deck, as this causes rapid wearing and consequent weakening of the gear.

t. Running Cable. Workmen shall never grab hold of a cable as it runs off a drum or is being pulled through a sheave.

u. Railway Cars. Workmen shall not stay inside a railway car when a load is being lifted or lowered in the car since they have no means of escape should the load swing.

v. Rigging Scaffolds. Suspended scaffolds shall be rigged in accordance with at least the minimum standards prescribed in article 0836.

0821. ROPES

1. Fiber Ropes

a. Inspection. Fiber ropes used to support a human load shall be inspected when installed and thereafter as frequently as may be necessary to insure their safe condition. Visual inspection should be made for abrasion, broken fibers, cuts, fraying, and deterioration due to corrosive substances. Ropes found to have defects shall be removed from such service.

b. Dragging Rope. Rope shall never be dragged along the ground or over rough or dirty surfaces.

c. Storing Rope. Ropes not in use should be stored in a dry, well ventilated place supported on slats or hung in loose coils. They shall never be exposed to lime or acids, nor stored in a room containing acids.

d. Sheaves and Blocks. Sheaves and blocks built for wire rope shall never be used for fiber rope.

e. Sharp Edged Burdens. When objects with sharp edges are to be lifted with ropes, protective pads shall be placed between the edges and the rope.

2. Wire Rope and Slings

a. Wire Rope Reeving. Standards for wire rope reeving systems given in NAVDOCKS DM-38, *Weight Handling Equipment and Service Craft,* shall be observed as applied to weight-handling equipment.

b. Rust Prevention. Wire rope slings shall be frequently inspected and lubricated in accordance with manufacturer's recommendations, to keep them pliable and prevent rust. Rusty ropes are dangerous because corrosion can then quickly develop inside and outside.

c. Storage. Wire rope should be stored in a place protected from the weather and acid fumes. It should not be stored in places where acid has been or is kept. It should also be protected from uric acid.

d. Twisting. A wire rope should be handled carefully so that it is neither twisted nor untwisted.

e. Removing Rope from Service. Wire rope shall be removed from service when:

(1) the number of broken wires in any pitch length or lay of rope totals the number shown in the following table:

Wire rope	*Number broken wires*
6 x 7	3
6 x 19	6
6 x 37	9
8 x 19	8

(2) the wires in the crown of the strand are worn to less than 60 percent of their original diameter;

(3) inspection indicates a dangerous amount of corrosion or distortion.

f. Damaged Equipment. Hooks, shackles, rings, pad eyes, or slings that have been deformed or damaged shall be removed from service.

g. Rope End Connections. Only qualified riggers shall fabricate rope end connections for use on weight-handling equipment or slings.

(1) Speltered sockets. Forged-steel speltered sockets are required to be used for wire rope end connections on all portal, tower, floating, hammerhead, overhead traveling, wall and gantry cranes. Speltered sockets should also be used on all other cranes except where forged-steel wedge or swaged sockets are used. Spelter means *zinc* and zinc only. Speltering shall be performed as specified in NAVDOCKS P-300, *Management of Transportation Equipment.* See also NAVDOCKS DM-38.

(2) Wedge sockets. Forged-steel wedge sockets may be used where it is frequently necessary to detach rope ends to change from hook to bucket work.

(3) Swaged Connections. Swaged connections are permissible only when factory installed by the manufacturer.

(4) Clamps, clips, and screw wedges. Clamps, clips, and screw-wedge rope end connections are prohibited on any weight-handling equipment.

h. Rope Clips. Where wire rope clips are used to assemble a connection, the U-bolt shall be over the bitter end of the rope and the minimum number and spacing of clips shall be in accordance with the following table:

Diameter of wire rope (inches)	*Size of clip*	*Number of clips*
5/16	3/8	3
3/8	3/8	3
7/16	1/2	4
1/2	1/2	4
5/8	5/8	4
3/4	3/4	4
7/8	1	5
1	1	5
1 1/4	1 1/4	5
1 3/8	1 1/2	6
1 1/2	1 1/2	6
1 3/4	1 3/4	6

Spacing between clips shall be approximately six rope diameters.

i. Inspecting and Tightening Clips. All end fittings such as sockets, Fiege connectors, and wire rope clips should be examined before the equipment is put in use to determine if there is an area of break adjacent to the fitting. Clips should be tightened after the first hour of running time and also at all regular inspections. After comparatively long use, clips should be removed and the rope examined for broken wires. If any are found, the damaged part should be removed and a new attachment made.

j. Adjustment to Guy Wires. No adjustment shall be made to guys while any workman is aloft on a guyed pole or mast.

k. Protective Pads. See article 0820.5p.

0822. SHEAVES AND DRUMS

1. Worn Equipment. Sheaves, drums, or pulleys which have become worn, chipped or the grooves corrugated shall not be used because they will injure the rope.

2. Use Proper Rope. Sheaves and blocks designed for use with fiber ropes shall not be used for wire rope, since they are not strong enough for that service and the wire rope does not fit the sheave grooves.

3. Gate Block Hooked. A gate block shall always be closed and hooked before being used.

0823. CHAINS

1. **Dangers.** All hoisting chains shall be inspected at frequent intervals for defects as stretch, wear, gouge marks, open welds, or fractures as indicated by very fine surface cracks, and shall be removed from hoisting service when such defects are found. Chains are less reliable than manila or wire rope as they break without any warning.

2. **Stretched Chains.** Chains which have stretched more than 5 percent in any five-link section shall be discarded. Chains, which in any individual link show wear greater than 25 percent of the thickness of the metal, shall be removed from service.

3. **Storing Chains.** Chains shall not be stored where they will be run over by tractors, trucks, or other equipment.

4. **Makeshift Repairs Prohibited.** Makeshift repairs such as splicing with bolts shall not be made on hoisting chain or chain slings.

5. **Kinks.** Chains should not be subject to sudden shock while in use. Loads shall not be lifted with a kinked or knotted chain.

6. **Fittings.** Attachments or fittings for chains should be of the type, grade, and size suitable for service with the size of chain used.

7. **Annealing Wrought Iron Chains.** Wrought iron chain shall be annealed by qualified workmen at least annually and a record of such treatment maintained. Alloy chain shall never be annealed.

0824. HOOKS

1. **Strength.** Hooks and rings used with chain should have at least as great strength as the chain. Hooks should be given a visual inspection at the beginning of each work day and prior to lifting the full rated load.

2. **Bent Hook.** Hooks bent to the extent that the throat opening is increased more than 15% or the point is more than 10° out of plane shall be discarded. They shall not be put back in service.

3. **Safety Latch.** Safety latch hooks in good condition should be used in operations where there is danger of catching the load on an obstruction; where heavy, stiff slings are used; and where ammunition and explosives are being handled. This applies particularly to hoisting buckets, cages or skips used in shaft work. (See article 0820.5)

4. **Testing and Marking.** Hooks shall be tested and marked as prescribed in NAVDOCKS P-300.

0825. CRANE OPERATION

1. **Chief Hazards.** Pertinent paragraphs of article 0820 apply to the operation of all types of cranes. The primary hazards of operating mobile type cranes, shovels, and draglines are:

a. **Unsafe Equipment**

(1) dropping or slipping of load;

(2) breaking of cables;

(3) non-use of outriggers;

(4) faulty or poorly adjusted brakes and clutches;

(5) clutch or brake slipping and allowing boom radius to increase;

(6) job exceeding safe boom radius;

(7) job exceeding capacity of crane;

(8) operating with bent or damaged boom;

(9) non-use of mousing or safety-type hooks.

b. **Unsafe Practices**

(1) overloading or exceeding capacities;

(2) obstruction to the free passage of boom or the load of the crane;

(3) backing and turning of machines without looking or signaling;

(4) operators not being familiar with equipment;

(5) operating on uneven ground;

(6) lifting load to an unknown greater radius;

(7) boom contacting high tension wires;

(8) using weight indicators without checking by common-sense judgment;

(9) not changing capacity charts on cranes when different boom lengths are used;

564-350 O - 74 - 9

(10) use of boom with bent or dented chord members;

(11) use of weight indicators as weighing devices;

(12) use of crane for towing.

2. **Inspection**

a. **Safe Load Capacity.** Every crane shall be inspected and tested annually for safe load capacity in accordance with NAVDOCKS P-300. The safe load chart shall be posted in a prominent place in the cab near the operator, who shall familiarize himself with the safe working and tipping capacity of that crane.

b. **Boilers.** Boilers on steam-operated cranes should be periodically inspected and tested in accordance with the ASME Power Boiler Code.

3. **Operator Responsibility.** Crane operators are responsible for knowing the limitations and capabilities of the cranes in their charge. They shall not attempt, nor shall they be required or permitted, to operate a crane in an unsafe manner or to operate a crane known to be in unsafe condition. Operators shall promptly report any malfunctioning or other defects in the equipment. Operators shall have the authority to stop and refuse to handle loads until safety has been assured.

4. **Personnel Restrictions**

a. **Authorized Crane Operators.** Cranes shall be operated only by authorized personnel who are thoroughly trained in the fundamental rules of crane safety. (See article 0820.3a)

b. **Boarding Crane.** Operators shall enter and leave the crane by means of the ladder provided for this purpose. No other person shall board a crane until permission has been given by the operator.

c. **Climbing on Moving Crane.** No personnel *except* the operators, and, on occasion examiners, supervisors, trainees, or repairmen, shall be permitted on the crane while it is in operation. No more than three such persons shall be in the cab at any time while the crane is in operation. No one shall ever climb on or off a moving crane.

5. **Calculating Load.** The weight of the material to be lifted should always be carefully calculated in advance; no chances should be taken on the result of a quick estimate. Also the radius at which the load will be lifted and set down should be accurately determined and compared with the capacity chart of the machine. On almost all truck, crawler, and locomotive cranes the weight of the hook, blocks, cable, and slings is part of the lifted load. Allowance must be made for this extra weight.

6. **Lifting Load from Water.** When lifting a load from water, its condition should be noted carefully. Contained water, or water in a water-logged structure, should be computed as a part of the weight. When the load leaves the water the crane takes on the added load as its buoyancy is lost. Unknown weights should never be lifted from the water. Water-logged loads or loads from water or mud should never be handled unless expressly authorized by an officer or supervisor qualified to determine the capability of the crane to handle the load.

7. **Testing Load.** When a heavy load is to be handled, the load shall first be raised a few inches to find out whether or not there is undue stress on any part of the sling and to make sure that the load is well balanced. If anything is found to be wrong with the brakes or engine, or with the adjustment of the sling, the load shall be lowered at once and no attempt made to move it again until the necessary adjustment or repairs have been made.

8. **Testing Brakes.** When lifting a capacity load, the brakes should be checked by stopping the lift a few inches above the ground and holding it with the brake. After rains, or under certain atmospheric conditions, brake linings may be wet and may not be fully effective until they have dried out. Operators should test brakes at the beginning of a new shift, after a rain storm, or at any time it is reasonable to suspect that brake linings may have become wet.

9. Hoisting Line Vertical. Before lifting a near-capacity load, operators must be sure the hoisting line is vertical. They should move the crane to position rather than lower the boom; a swinging capacity load increases the chance of tipping. They should never try to lift tied-down loads, or pull pipes or other objects out of the ground.

10. Lowering Boom. Lowering of the boom under load shall be done only with the greatest caution, checking the radius-load capacity chart, and radius indicator where necessary. Lowering the hoist line and the boom simultaneously shall never be done.

11. Speed of Lowering. When lowering loads, the speed should be limited; it should not exceed the hoisting speed of the equipment for the same load. The ordinary hoisting speed of a 30 ton motor-operated crane is about 18 feet per minute with rated load. Stopping the load at such speeds within a short distance may double the stress on the slings and crane.

12. Swinging Loads. Care shall be exercised continuously to guard other workmen, buildings, or scaffolds against injury from swinging loads. Loads should not be swung over workmen. If it is absolutely necessary to move loads over space with personnel working below, adequate warning must be given by bell or siren so the workmen can move into safe places.

13. Dual Lifts. Dual lifts are extremely dangerous and should be attempted only when absolutely necessary, and then only under competent supervision throughout the entire operation. Before making a dual lift the proper position of the cranes and the location of the slings to balance the load properly for each crane should be carefully determined. Shifting of the load would cause overloading and failure of one crane, thus throwing the entire load onto the second crane and resulting in the failure of both cranes.

14. Exceeding Rated Load

a. When Permitted. When successfully conducted official tests with overloads not exceeding those listed in NAVDOCKS DM-38, *Design Manual, Weight Handling and Service Craft* are on record, a subsequent lift equal to that test lift may be authorized if absolutely necessary and if all conditions having any influence on the lifting problem are essentially the same as the test conditions. In such cases, due consideration shall be given to the effect of any inherent weakness in the structure of any of its component parts, deterioration, weather conditions, and all other circumstances that might modify the conditions of the record test. During such a lift the area shall be completely cleared of all personnel and of all equipment and material which might be damaged by a failure. In no case shall a lift exceeding the recorded limited-test lift be made without specific authorization from the Naval Facilities Engineering Command.

b. Authorization. The operating crew shall never be permitted to load any weight-handling equipment in excess of its rated lifting capacity, without specific authorization from the officer responsible for the operation of the unit. Every instance of exceeding the rated capacity shall be treated as a special problem and all the conditions involved shall be duly considered. In such cases, decisions as to the safe lifting capacity within the overloads in accordance with paragraph a above shall be made by the public works officer.

15. Load Over Workman. When any load is on the hook, no one shall pass beneath the hook.

16. Fire Extinguishers. All cranes shall be equipped with appropriate fire extinguishers which shall be maintained ready for use.

17. Crane Safety Devices. Safety devices shall not be installed on cranes without prior approval of the Naval Facilities Engineering Command, which will be obtained via the safety division of the appropriate headquarters. See NAVDOCKS P-300 or *Marine Corps Manual,* as appropriate, for detailed instructions on requesting such approval.

18. Damaged Crane

a. Standing Instructions shall include procedures to be followed in case of failure or suspected imminent failure of boom, boom hoist, or other hoist gear. Such Instructions shall provide for clearing the area under the boom, rigging of preventer gear to prevent dropping of a boom, and positive engagement of locking devices, as applicable.

b. In any case of a failure or suspected imminent failure of a crane, one person shall be designated in charge during the application of emergency measures to secure the crane and during the conduct of emergency repairs. He shall direct and witness all actions during the securing of the crane and emergency repairs to guard against collapse of the crane during these operations.

0826. CRAWLER, TRUCK, AND TRACTOR-MOUNTED CRANES

1. General Precautions. Pertinent precautions listed in articles 0820-0825 apply to crawler, truck and tractor-mounted cranes.

2. Care of Equipment

a. Stowing Tools. Tools and other maintenance items shall be kept in the tool box.

b. Fire Extinguishers. All mobile cranes shall be equipped with approved fire extinguishers which shall be maintained ready for use.

c. Danger of High Winds. A high boom with no load in a high wind shall be avoided; this condition might tip the boom backwards.

d. Striking Boom. Whenever a load strikes the boom or the boom strikes an object, the boom should be lowered immediately and carefully examined for bent or damaged members. A slight bend in the boom structure can cause it to fail and collapse.

e. Moving Capacity Load. No one shall travel nor travel and rotate simultaneously with a near-capacity load. If the travel surface is uneven the machine may upset. When necessary to move a capacity load it should be placed on a truck or railroad car and then unloaded at the new location.

f. Traveling Precautions. When traveling from one weight-handling job to another, the boom shall be set in the boom rest when available, or parallel to the general direction of travel and at an angle to clear any overhead obstruction. With a long boom it will generally be necessary to carry the boom to the rear so that it can be swung when traveling around corners. The boom shall not be raised or lowered while traveling. No crewman shall ever ride under the boom.

3. Operating Near High Tension Lines. Crane booms should never be operated near high tension power lines if it can be avoided. If work must be done in their vicinity, effort should first be made to have the power lines de-energized before starting work. If that is not possible, then make sure that at no time the boom or fall cable comes closer than 10 feet to the high tension lines while the crane is operating. Operators should not depend on any chain or other grounding device dragging along the ground to give protection against electrical current discharges through the crane. Such a device is not a safe means for grounding a crane and gives the operator a false sense of security.

The electrocution hazard created when a crane boom touches a power line is an extremely serious one. When a boom or cable does touch a high tension wire, creating a short, the operator should either stay in his position on the machine KEEPING HIS HANDS OFF THE CONTROLS, or JUMP CLEAR of the machine. He should never dismount from the machine by climbing down the side thereby permitting his body to come in contact with the machine and the ground at the same time. He should also warn all ground crews not to touch units in contact with the wire.

4. Angle of Load. Loads should be lifted only when lifting cable is in vertical position. Lifting a load with the cable at an angle develops twisting stresses in the boom which can cause buckling. Also the swinging of the load after it is lifted clear off the ground may cause the crane to upset.

5. Setting Outriggers. When lifting a critical load, the outriggers shall be set on all sides, since if the load is dropped, the kickback may tip the crane backwards.

6. Level Footing. When operating a crawler-type crane over soft or uncertain ground, mats should be used to ensure a level footing. In such places planking, pontoons or outriggers should be used with truck cranes.

7. Radius Indicators. Radius indicators and capacity charts shall be provided on all crawler, truck, and tractor-mounted cranes.

8. Blocking Wheels or Tracks. Unless parked on level ground brakes shall not be depended on to protect against uncontrolled movements, and blocking shall be used.

0827. LOCOMOTIVE CRANES

1. General Precautions. Pertinent precautions in articles 0820 through 0825 apply to locomotive cranes.

2. Removing Steps and Grabs. Before placing a locomotive crane in operation at a naval activity all steps and hand grabs, except those necessary for access to the cab, shall be removed. (Note: These steps and hand grabs must be replaced before the crane can be moved over the main line of a railroad.)

3. Boom at Right Angle to Track. When making heavy lifts with the boom at right angles to the track, unless the weight of the load is accurately known, the outriggers shall be extended and blocked so as to prevent upsetting.

4. Crane Derailed. If a locomotive crane has been derailed, a wrecking frog or car replacer (or its equivalent) should be used to re-rail the crane and it should be hauled back on the track by external power.

5. Curving and Nonlevel Track. Locomotive cranes shall not work on a curve, or on any track out of level, without having outriggers thoroughly set in place. A VARIATION OF ONE INCH IN THE LEVEL OF

STANDARD GAGE TRACK MAY REDUCE THE LIFTING CAPACITY OF THIS TYPE OF CRANE APPROXIMATELY 60 TO 80 PERCENT.

6. **Radius Indicators.** Radius indicators and capacity charts shall be provided on all locomotive cranes.

7. **Setting Outriggers.** When lifting a critical load, the outriggers shall be set on all sides, since if the load is dropped, the kickback may tip the crane backwards.

8. **Rail Clamps.** Rail clamps shall be loosely set on parked locomotive cranes; rail clamps shall never be used as a means of resisting overturning when handling capacity loads.

0828. PORTAL, GANTRY, HAMMERHEAD, FLOATING, AND OVERHEAD TRAVELING CRANES

1. **General Precautions.** Pertinent precautions in articles 0820 through 0825 apply to portal, gantry, hammerhead, floating, and overhead traveling cranes.

2. **Leaving Crane Unattended.** Load should never be left on cranes overnight or for a longer period than is absolutely necessary. If the load hook is left hitched to an object and the crane operator has to leave the crane, the switches shall be pulled and tagged with a notice such as "LOAD HITCHED–DO NOT OPERATE."

At any other time the operator leaves the crane, all controllers shall be placed in the "OFF" position, the main switch opened and the brakes set. On portal, floating, and hammerhead cranes the rotate locking devices shall also be set.

3. **Wind Locking Devices.** Whenever a crane is left unattended for more than one hour, or whenever weather conditions require, all wind locking devices shall be set.

4. **Care in Closing Switch.** If the operator starting on duty finds a main or emergency switch open, he shall not close it until he has made sure that no one is on or about the crane. If there is a "MAN WORKING" warning sign on the switch, he shall not remove it unless it was placed there by himself, and he shall not close the switch until the warning sign has been removed by the man placing it there.

5. **Standing Over Turbo-Generator.** Cranes when not in use should not be left standing over a turbo-generator unit.

6. **Changing Operators.** When changing operators on a crane, the change shall always take place ON THE GROUND, NOT IN THE CAB.

7. **Pushing Cranes.** Bumping into runway stops except to correct excessive skew, or into other cranes, shall be avoided. If the operator is ordered to engage with or push other cranes, he shall do so with special care for the safety of persons on or below the cranes, and only after making sure that any persons on the other cranes are aware of what he is doing.

8. **Access Ladders.** Each overhead crane runway shall be equipped with an access ladder at each end of the craneway. Ladders shall be made of steel and if over 20 feet long, have a protective cage extending within 7 feet of the floor. At the top of each ladder, a platform, at least 2 feet by 2 feet, shall be installed where employees may board the crane. Access to crane shall be made from the stationary platform to a loading platform attached to the crane cab at the same level. See also 0835.5.

9. **Limit Switches.** Limit switches shall be tested at the beginning of each shift by "inching" the block into the limit stop.

0829. DERRICKS

1. **General**

a. **Load and Radius Indicator.** All derricks shall be used in such a manner that no part shall be stressed beyond its safe working strength. They shall have radius indicators and capacity charts.

b. **Inspection.** Before operation each derrick shall be inspected and all brakes, clutches, frictions, and motions tested daily

by competent personnel, and a record of all inspections shall be kept at the scene of operations until completion of the job.

c. **Experienced Operators.** Derricks shall be operated only by experienced workmen.

d. **Foot Blocks.** The foot block of every derrick shall be solidly supported and firmly secured against movement in any direction. Shores shall be placed against the foot blocks of the derrick to prevent any horizontal movement.

e. **Lines and Booms.** Loads, load lines, and booms shall not be permitted to strike against scaffolds, objects, or structures.

f. **Riding Loads.** Workmen shall not be allowed to ride on loads handled by derricks.

g. **Walking Under Load.** Loads shall not be lifted or swung over the heads of persons and no one shall be permitted to walk under a load.

h. **Securing Boom.** When work is stopped or when the derrick is not in operation, the boom shall be lowered to a horizontal position or tied in place to prevent wind from blowing it out of control.

i. **Reference.** Additional information may be obtained from the American Standards Association publication, *Safety Code for Cranes, Derricks, and Hoists,* B30.6 (when available).

2. **Breast Derricks**

a. **Set on Planks.** Breast derricks, used principally for setting stone, shall be set on heavy planks—never directly on newly-laid floors.

b. **Bracing.** Where a breast derrick cannot be guyed from the front or load side, a strut or stiff triangular brace shall be fastened to the back of the derrick to prevent it from falling backwards should the pull of the load be changed to other than vertical.

c. **Guarding Gears.** All gears shall be effectively guarded and a ratchet and pawl which will hold the load at any desired height shall be provided.

d. **Handle of Lever.** A hole shall be drilled in each end of the gear shaft outside the operating lever, and a cotter pin placed in each hole to prevent the handle from slipping or working off the shaft.

e. **Lowering Load With Brake.** Crank handles shall be removed from the crankshaft before any load is lowered by means of the brake and they shall be kept removed as long as the brake is being so used.

3. **Pipe Laying Derricks**

a. **Guards.** All gear wheels and blocks shall be effectively guarded.

b. **Securing Cable at Night.** At night the rope or cable shall be wound up until the blocks meet, and the drums shall be chained and locked.

c. **Top Heavy Load.** When motor truck and crawler derricks are used, positive means shall be taken to prevent the load from overturning the supporting vehicle.

4. **Gin Poles**

a. **Guying.** Gin poles shall be properly guyed according to the type used.

b. **Anchoring.** Guys shall be attached to "dead men" or other type of approved anchors, or some permanent stable object.

c. **Spacing of Anchors.** When the guy lines are anchored to a permanent structure the anchors shall be located at least one-half the height of the pole from its base, and when "dead men" are used, the distance from the base shall be at least one and one-half times the height of the pole.

5. **Stiff-Leg Derricks.** The weighting and anchoring of a stiff-leg derrick shall be such as to assure stability of the derrick. The material for weighting should be enclosed in well-constructed boxes.

6. **Guy Derricks**

a. **Cables.** Wherever possible, the top of the mast on guy derricks shall be steadied by not less than six cables spaced so as to make the angles between adjacent cables approximately equal.

b. **Eyes at Masthead.** On guy derricks, eyes shall be formed in the guys at the masthead end by the addition of properly attached socket fittings. The use of U clamps on the short end of a wire rope for making fastenings is not recommended.

c. **Fall Line Vertical.** The fall line shall be vertical before a lift is made.

0830. HOISTS AND ELEVATORS

1. General

a. **Inspection.** All hoisting equipment shall be periodically inspected and tested, at least monthly, and brakes, gears, and operating levers maintained in good working order. Any hoist that becomes defective or any hoist that is not in good working order shall be plainly tagged to this effect and shall not be used until repaired and tested.

b. **Load Capacity.** Before any hoist is placed in operation, the maximum load capacity shall be determined and, under no circumstances, shall the hoist be used for lifting loads above that capacity. Load capacity of hoisting apparatus shall be prominently displayed.

c. **Reliable Operators.** Hoists or elevators for lifting workmen or materials shall be operated only by competent and reliable men.

d. **Hatchway, Hoist, or Tower.** Men shall not work in or on a hatchway or hoist tower when the hoist is being operated.

e. **Signals**

(1) Kinds Permitted. A standard signal system shall be used on all hoists. Whistle signals on hoisting work are dangerous, and their use is not recommended. Hand signals are more reliable where the operator can always see the signalman; but a mechanical or electrical bell at the engine is much more satisfactory.

(2) Hoist signalman. Hoist signals shall be given only by the assigned signalman.

(3) Code posted. The signal code shall be posted near the signal device at each work level, and it must be kept clearly visible.

f. **Keep Clear of Shaftway.** While waiting for the hoist, workmen shall never put their heads into the shaftway to see where the hoist is. They can tell whether or not the hoist is moving by watching the hoist cable; they can note its location from the loading platform.

g. **Locking Device for Cage or Platform.** When it is necessary for workmen to enter the cage or platform of any material hoist or elevator other than at the bottom landing, some locking device must be provided to prevent the cage or platform from being lowered or raised while the workmen are entering or leaving the cage.

h. **Electrical Signaling Device.** If an electrical signaling device is placed on the cage and this is the only method used to signal the hoisting operator the locking device may be omitted.

i. **Workmen's Hoists.** Hoists used to raise and lower workmen shall be constructed and used in accordance with ASA A10.4-1963 *Safety Requirements for Workmen's Hoists.*

2. Inside Material-Hoist Shaftways

a. **To Be Enclosed.** All material-hoist shaftways erected inside buildings should be enclosed tightly for their entire height. When this is not practicable, the sides of the shaftways not used for entrances shall be enclosed on each floor to a height of at least 8 feet with wire netting formed of not less than No. 16 U. S. gage wire, one and one-half inch mesh, or enclosed with wooden slats spaced vertically not more than 1½ inches apart, with a toe board placed around all sides except at the entrance.

b. **Adjacent Shaftways.** When two material hoist shaftways are erected side by side, similar protection shall be placed between them, except where enclosed cabs are installed.

c. **Bars and Gates.** All entrances into the shaftway shall be protected by hinged or pivoted bars or by gates.

d. **Guide Rails Rigid.** The guide rails of all hoists shall be kept rigid and in perfect alignment at all times.

e. **Construction of Guide Rails.** The guide rails shall be of sound lumber or steel of adequate uniform size to provide a firm track.

f. **Sheave Beams.** Overhead sheave beams and their supports shall be of good sound timber or steel of adequate strength and stiffness.

g. **Protection of Hoists.** Protective covering of planking or heavy wire netting shall be provided above all hoists to prevent objects falling down the shaftway.

3. **Material-Hoist Platforms**

a. **Safety Factor.** Material-hoist platforms shall be substantially constructed and of sufficient strength with a safety factor of five for the rated load and capacity.

b. **Protection of Crosshead.** Overhead protective covering of planking or heavy wire mesh shall be provided on the crosshead of every material-hoist platform to prevent objects falling on the workmen when loading or unloading the hoist.

c. **Hinged Sections.** The protection on the crosshead shall be made in sections and each section hinged, so they may be raised when hoisting long material.

d. **Hoisting Long Material.** When using a hoist for long material, the several pieces of the material shall be securely fastened together and made fast to the hoist so that no part of the load can fall or project beyond the sides of the hoist and get caught.

e. **Blocking.** Suitable blocking and cleats shall be provided on all platforms when wheelbarrows or other rolling equipment are transported to hold them securely in place.

f. **Enclosed Sides.** The platform of every hoist shall be enclosed on the sides not used for loading or unloading, with toe boards and a heavy wire screen enclosure formed of No. 16 U. S. gage wire, one and one-half inch mesh.

4. **Outside Hoisting Tower**

a. **Construction.** All material-hoist towers built of wood erected outside of buildings shall be constructed of No. 1 common Douglas fir or equivalent except for cab or bucket guides, which shall be clear, straight-grained Douglas fir or equivalent, free from knots or other defects. Towers should be plumb and square at corners.

b. **Wooden Members.** Wooden members for the corner posts may be built up of 2-inch laminated material. The wooden members, such as splice pads, braces, etc., may be bolted or nailed. No bolt less than ½ inch in diameter shall be used.

c. **Strength.** Towers other than wooden towers may be used if equivalent strength is provided.

d. **Cross Bracing.** The diagonal cross bracing shall be placed on each of the four sides of tower and between horizontal cross ties except at loading and unloading platforms, in which case some other bracing of equivalent strength shall be provided.

e. **Removal of Braces.** Not more than two diagonal braces shall be removed from any panel point in the tower and never from two consecutive panels.

f. **Foundations.** Foundations for hoist towers shall be sufficiently large to spread the hoist load so that it will not exceed the safe bearing capacity of the soil on which it stands. Foundations shall be level.

g. **Splicing.** All splices in posts shall be not less than 2 inches in thickness, 4 feet long, and shall be spiked or bolted to at least 2 adjacent sides of the posts. All splices shall be staggered.

h. **Ladder.** A strong ladder, securely fastened to the tower, shall extend its entire height. (See article 0835.5)

i. **Anchoring.** Hoist towers shall be securely guyed and well anchored.

j. **Securing Guys.** The guys shall be securely clamped to "dead men" of sufficient size, and well buried unless adequate building anchorages are available.

k. **Platforms.** Platforms of ample size and strength, with railings and toe boards, shall be built at each level where men work.

l. **Enclosed Sides.** Hoist towers shall be enclosed on all sides for their entire height with a wire screen enclosure formed of No. 16 U. S. gage wire and one and one-half inch mesh securely fastened to the tower structure. Properly protected openings shall be formed on each floor level.

5. **Hoisting Engines**

a. **Specifications.** All gearing on hoisting engines shall be enclosed or suitably guarded. Steam piping shall be insulated and, if electrical equipment is used, it shall be effectively grounded.

b. Electric Motors. Where electric motors are used, unauthorized persons shall not tamper in any way with the electrical apparatus, and all repairs and adjustments shall be made by competent electricians. (See Chapter 15.)

c. Protection from Weather. The hoisting engine and the operator shall be protected against the weather and from falling objects by a substantial covering.

d. Inspection. All hoisting equipment shall be frequently inspected, and brakes, gears, and operating levers kept in good working condition.

e. Guards for Cables. Guards shall be provided where necessary to prevent persons coming in contact with hoisting cables.

f. Grease on Brake Drums. Brake drums shall be kept free of oil or grease or any substance which reduces their efficiency.

g. Securing Load. A pawl or dog shall be used in addition to the brake to hold the load when it is to be suspended for any considerable length of time.

h. In Public Places. Hoisting engines should not be set up in the street, but if they must be so located they shall be completely housed-in for the protection of the public, the engine, and the operator.

6. Cables and Sheaves

a. Specifications. Hoisting cable shall not be less than plow steel grade and shall be so constructed of wires and strands of wires as to be equal in flexibility to standard plow steel hoisting rope composed of 6 strands of 19 wires each. No hoisting cable less than 1/2 inch in diameter shall be used except for small winches as used on gin poles, etc., where 3/8-inch cable may be used.

b. Fastenings. Cable fastenings shall be substantially and securely made and maintained. Only properly attached sockets should be used for new wire rope fastenings. (See article 0821.2)

c. Worn Sheaves. Sheaves that have become worn, chipped, or the grooves corrugated should not be used, as they will injure the rope. (See 0825 and 0821)

d. Cast Iron Sheaves. Cast iron sheaves shall be tested with a hammer before using to make sure they are not cracked or broken. Cast steel sheaves are preferred.

7. Concrete Bucket Towers

a. Standards. Concrete bucket towers shall conform to the standards set for material hoists and towers, and shall have similar protection and shaftways.

b. Platforms and Runway. Openings with platforms shall be formed at each floor level, and the runway leading to the tower shall be guarded with railing and toe guards.

c. Riding Bucket. Workmen shall never ride in the bucket.

d. Hoist Pit. The hoist pit shall be kept drained. Workmen shall not enter the pit to make repairs without first making sure that the bucket is resting on the blocking.

0831. PAVING AND CONCRETE EQUIPMENT

1. Rock Crushers and Batching Plants

a. Platforms and Ladders. Proper working platforms and safe ladders adequately equipped with guardrails shall be provided on each rock crusher and batcher.

b. Falling Rocks. Ground crews shall be protected from falling rocks or other material that may be dropped. Protective hats shall be worn by these workmen.

c. Dust Protection. Equipment for protection against dust shall be provided for all cement handlers, and this equipment must be worn wherever applicable.

d. Power Lines. Care must be taken to make sure that high portions of this equipment do not come in contact with nearby electric power lines.

2. Concrete Mixers

a. Skip

(1) Loader Cables. Frequent inspection of the skip loader cables and brakes shall be made to prevent possible injury from a falling skip.

(2) Blocking. Whenever it is necessary to work under a skip, the skip must be solidly blocked into position to prevent it from falling should the brake fail or be released.

b. Surrounding Area. The area around a mixing plant shall always be kept clean;

waste material shall not be allowed to accumulate near it.

c. **Dust Protection.** Dust protection shall be provided for all personnel working with cement or cement sacks.

d. **Hopper.** If an elevating hopper is used, the machine operator shall always see that all workmen are out of danger before the hopper is lowered. The hopper itself should be guarded by barriers on the side to prevent anyone walking under it while it is being lowered.

e. **Cleaning Drum.** The switches shall be opened, the throttles closed, and the operating mechanism of mixers locked in the "Off" position when men are cleaning inside the drum.

f. **Watchman and Warning Signs.** If possible, a flagman or watchman should always be stationed near a mixer when batching trucks are backing up to it, and he should use a whistle to warn all workmen who are in the danger zone. If such a watchman is not available, "DANGER–KEEP AWAY" signs should be placed conspicuously on each side of the mixer to warn the workmen.

3. **Asphalt Plants**

a. **Fire Prevention.** Hot mix plants shall have adequate safeguards for preventing fires. Asphalt spreaders shall be properly maintained so as to prevent injury to the operators and to prevent fires.

b. **Guards.** Mixing plants shall have suitable guards on all moving parts that might jeopardize the safety of the operators or the maintenance crews. Safety guards against the spilling of hot asphalt on operating personnel should also be employed.

c. **Protective Apparel.** Workmen handling tar or asphalt shall wear gloves, goggles, safety shoes and suitable heavy clothing to prevent burns from bubbling or splashing hot material. Trousers should be fastened tightly around the ankles.

d. **Ventilation.** Adequate ventilation shall be provided to maintain fumes from hot asphalt, tar, oils, etc., at safe concentrations for personnel.

e. **Traffic Control.** Proper traffic control shall be maintained at all times around the mixing and batching plant when workmen or trucks are working in the area.

4. **Pavers**

a. **Skip Guards.** Wherever feasible, road building mixers should be equipped with a guard to prevent workmen from walking under the skip when it is raised to the charging position. This skip guard should be serviced regularly and never allowed to get out of order. It should be taken off the machine for repairs only when the mixer is idle.

b. **Load Warning Bells.** Pavers should be equipped with a load warning bell, which should always be used when the paver is being moved ahead or when the bucket is run out among the puddlers and the men placing steel and joints.

c. **Backing Truck.** The paver skip signalman must be active and alert. He should always warn men working on the subgrade when a truck is backing into a skip, and he should signal the truck driver when all men are in the clear.

d. **Waste Material.** Waste material shall not be allowed to accumulate around pavers.

e. **Cables and Sheaves.** Cables and sheaves of pavers shall be inspected daily.

f. **Warning Signs.** Plenty of "ROAD CLOSED" warning signs, used separately or placed together to form a long barricade, should be employed where necessary.

5. **Belt Conveyors**

a. **Guards.** Adequate safeguards shall be provided at all points along every conveyor.

b. **Making Adjustments.** The conveyor shall always be shut down before any maintenance or adjustments are attempted.

c. **Locking Controls During Repairs.** When any repair is being made remote from the controls of the paver, adequate warning signs or locking devices shall be placed, and these shall be removed only by the repairman himself after completion of the job.

LADDERS AND SCAFFOLDS

0835. LADDERS

1. **Specifications**

a. Safety Code. Commercial ladders shall comply with the specifications currently in use by the Department of the Navy.

b. Defective Parts. Ladders should be inspected at frequent regular intervals. Ladders with weakened, broken, or missing treads, rungs, or cleats, or broken or "splintered" side rails shall not be used.

c. Coating. Ladders should be kept coated with a clear shellac or other transparent material, or treated with linseed oil. Painting with opaque paint is forbidden.

d. For Two-Way Traffic

(1) Two ladders. Separate ladders for ascending and descending shall be provided in building construction of more than 2 stories in height, or where traffic is heavy.

(2) Single ladders. Where a ladder is installed wide enough to permit traffic in both directions at the same time, a center rail shall be provided. One side of the ladder should be plainly marked "up" and the other side "down".

e. Guardrails. Ladders used in passageways, driveways, or public thoroughfares shall be guarded by barricades (guardrails). Doors which open adjacent to portable ladders should be locked or otherwise blocked or guarded while the ladder remains in use.

2. **Position**

a. Support. Ladders shall be placed so that the rails have a secure footing and a substantial support at or near the top.

b. Stable Position. Ladders shall not be placed against sash, window panes, or unstable supports such as loose boxes or barrels. The use of ladders during a storm or in a high wind shall be avoided unless necessary, in which case the ladder shall be securely lashed in position.

c. Against Window Frames. If a ladder is to be placed against a window frame, a board shall first be spiked across the side rails at the top.

d. In Front of Door. A ladder shall never be placed in front of a door opening toward the ladder unless the door is locked, or otherwise blocked, barricaded, or guarded.

e. In Elevator Shafts. Ladders shall not be placed or used in elevator shafts or hoistways. Should such a procedure be necessary, the ladders shall be protected from objects falling from operations at higher elevations in or adjoining the shaft.

f. Standing Outside. Ladders shall not be left standing, especially on the outside, for long periods of time unless securely anchored at both top and bottom.

g. Lowering Ladders. Ladders should be handled carefully when being lowered. They should not be allowed to drop on their sides or to fall heavily endwise on one rail.

h. Portable Metal Ladders

(1) Near Electric Circuits. Ladders used near live electric circuits should not have metal rungs, braces, trusses, or struts, because of the danger of short circuits or accidental contact with live wires.

(2) Near Electrical Equipment. Until such time as satisfactory specification for portable metal ladders approved by the Navy Department is issued, the use of such ladders is not recommended. These ladders shall not be used within four feet of any electrical wiring or equipment. All portable metal ladders shall be marked with signs or decals reading CAUTION–DO NOT USE NEAR ELECTRICAL EQUIPMENT. Such signs shall be placed on the inside of side rails between the third and fourth rungs.

3. **Use**

a. Cause of Accidents. The use of ladders where scaffolds, platforms, or other substantial working levels should have been provided, has resulted in many serious accidents. Work performed from ladders should be kept to a minimum.

b. Facing Ladder. When ascending or descending a ladder, the user shall always face the ladder.

c. **Free Hands.** No one should go up or down a ladder without the free use of both hands. If handling material, a rope should be used.

d. **Running.** No one shall run up or down a ladder, or slide down a ladder, at any time.

e. **Grease On Shoes.** Before attempting to climb a ladder, workmen should remove oil or grease from the soles of their shoes.

f. **Safety Belt.** When doing maintenance work above the ground, workmen should always use a safety belt, with a lifeline tied off long enough for necessary movement, but short enough to prevent falls.

4. **Single Portable Ladders**

a. **Definition.** A single portable ladder is a ladder of one section which may be used at various locations.

b. **Length.** Single portable ladders over 30 feet in length shall not be used.

c. **Angle.** When a portable ladder is placed against the wall or other fixed object, unless the ladder is securely fastened or a man is holding it, the base should be one-fourth the ladder length from the vertical plane of the top support. Where the rails extend above the top landing, ladder length to the top support only is considered.

d. **Back Clearance.** The clearance back of a ladder should always be sufficient to obtain a secure foothold on the rungs. Clearance of at least 6 inches is recommended.

e. **Front Clearance.** The clearance space in front of the ladder should be such that it will not be necessary to assume a cramped or unnatural position when climbing. Front clearance of at least 30 inches is recommended.

f. **Nonslipping Base.** Portable ladders, where used on smooth floors or sloping surfaces should be equipped with nonslipping bases, or otherwise secured to prevent displacement.

g. **Splicing.** Single ladders which were not constructed to be used as sectional ladders should not be spliced together to form a longer ladder, unless such splicing together will provide and maintain the strength and rigidity required for a longer ladder.

5. **Fixed Ladders**

a. **Definition.** A fixed ladder is a ladder fastened to a structure in a permanent position.

b. **Fastenings.** Fixed ladders shall be securely held in place by top, bottom, and intermediate fastenings as required.

c. **Clearance.** Vertical ladders shall have a clear distance of at least 6-1/2 inches from back of the rung or cleat to the nearest permanent object. Climbing clearance should be at least 30 inches from face of rungs to the nearest obstruction.

d. **Sloping Ladders.** Sloping ladders which require climbing on the under side of the ladder shall not be used.

e. **Landing Platforms.** Rails of ladders fixed to top landings should extend a distance of at least 36 inches above the landing. Rungs above the landing shall be omitted when it is necessary to pass through the ladder. Landing platforms shall be provided where a person must step a greater distance than 14 inches from ladder to roof, tank, etc.

f. **Platform Intervals.** Landing platforms shall be provided for fixed ladders exceeding 30 feet in length at intervals of 30 feet or fraction thereof. The ladder sections shall be offset each from the other and connected by a landing platform. The top rung of any section of fixed ladder shall be at the level of or above the adjacent landing platform. On stacks or tanks the offset provision need not apply.

g. **Metal Cages.** Metal cages extending from a point 7 feet above the base should be provided for all permanently fixed external and internal ladders more than 20 feet in height where such ladders are employed in regular service. Metal cages are not required where a ladder climbing safety device is provided in accordance with article 1545.5.

6. **Extension Ladders**

a. **Definition.** An extension ladder is a ladder consisting of two or more sections

traveling in guides or brackets so arranged that it may be adjusted to different lengths.

b. Specifications. Extension ladders shall not have more than two sliding sections. No extension ladder exceeding 60 feet in length when extended shall be used.

c. Angle. Extension ladders should be raised vertically, locked, and then placed at the same angle as single ladders. (See article 0835.4c.)

d. Overlapping Portions. Extension ladders shall be so constructed that, when locked in any position, rungs of the overlapping portions of each section will be opposite each other and of strength equal to a ladder with continuous side rails.

e. Extent of Overlap. A lap of 3 feet shall be maintained for ladders up to 38 feet of extension length; 4 feet for ladders 38 to 44 feet; and 5 feet of lap for ladders with 44 feet of extension length.

7. Stepladders

a. Definition. A stepladder is a ladder having treads and so constructed as to be self-supporting.

b. Length. Stepladders longer than 16 feet shall not be used.

c. Fully Open. Stepladders shall be fully opened before anyone steps on them.

d. Used as Platform. A stepladder shall not be used as a working platform.

e. Tools. Tools shall not be left on top of stepladders, unless tool holders are provided.

f. Strenuous Action. Stepladders shall not be used when strenuous action on the part of the workmen is required. Under those circumstances there is danger of overturning the ladder.

8. Sectional Ladders

a. Definition. A sectional ladder is a ladder consisting of two or more sections so constructed that the sections, when combined, will function as a single ladder.

b. Specifications

(1) Sectional ladders longer than 30 feet shall not be used.

(2) The bottom and intermediate sections of sectional ladders should not exceed a length of 6-1/2 feet, and the top section should not exceed a length of 9 feet.

(3) The connection joint of sectional ladders shall not be less than 1 foot and shall fit closely without binding or unnecessary play.

c. Angle. Sectional ladders shall be placed for use at the same angle as single ladders. (See article 0835.4c.)

9. Trestle Ladders and Extension Trestle Ladders

a. Definitions

(1) Trestle Ladder. One consisting of two single ladders hinged at the top to form equal angles.

(2) Extension Trestle Ladder. One consisting of a trestle ladder with an additional single ladder which is adjustable vertically and provided with a lock to keep it in place.

b. Dimensions Permissible. Trestle ladders and the base sections of extension trestle ladders shall be limited to 20 feet in height. The extension section of extension trestle ladders shall not exceed 20 feet.

c. Support for Scaffold. Trestle and extension trestle ladders shall be so spread that the width of the trestle at the bottom, inside to inside, is equal to or greater than 5-1/2 inches per foot of ladder length.

d. Locking Device. The locking device or spreader used to hold the front and back sections in an open position must always be locked in place when using the extension ladder. Also, the locking device for securing the extension section to the base must be utilized.

0836. SCAFFOLDS

1. General

a. Definitions

(1) Scaffold. The term "scaffold" shall mean any temporarily located elevated platform used for supporting workmen and materials in the course of any and all types of construction work, including excavation, construction, erection, alteration, demolition, maintenance, repair, and all operations in connection therewith. Suggested methods of design and construction of the various types

of scaffolds are illustrated at the end of this section.

(2) Barge (Pontoon) Scaffold. The term "barge" or "pontoon" scaffold shall mean a scaffold of the independent pole type built upon and secured to a barge or pontoon for work on the hull of ships afloat.

(3) Boatswain's Chair. The term "boatswain's chair," illustrated in Figure 7, shall mean a seat to support a person in a sitting position at an elevation.

(4) Bricklayer's Square Scaffold. A "bricklayer's square scaffold," illustrated in Figure 6, is a platform composed of planks supported on built-up squares, secured to each other by diagonal bracing.

(5) Carpenter's Bracket Scaffold. A "carpenter's bracket scaffold," illustrated in Figure 9, is a platform composed of planks and supported on triangular-brace brackets secured to the side of the building.

(6) Crawling Board or Chicken Ladders. These terms shall mean a plank or board to which cleats are nailed at equal intervals. This board is used for crawling up or down steep inclines.

(7) Float (Ship) Scaffold. This term shall mean a scaffold hung from an overhead support by means of ropes and consisting of a platform of planks fastened together by a diagonal board underneath the platform, which rests upon and is securely fastened to two parallel plank bearers at right angles to the span.

(8) Horse Scaffold. A "horse scaffold," illustrated in Figure 5, is a platform which is supported by horses.

(9) Independent Pole Scaffold. An "independent pole scaffold," illustrated in Figures 1 and 2, is supported from the base by a double row of uprights and is independent of support from the walls. A pole scaffold is constructed of poles, ledgers, bearers, and diagonal bracing. (An independent pole scaffold may also be referred to as a build-up scaffold.)

(10) Ladder-Jack Scaffold. This term shall mean a scaffold, the platform of which is supported by jacks attached to ladders (illustrated in Figure 9).

(11) Needle-Beam Scaffold. A "needle-beam scaffold," illustrated in Figure 4, consists of a plank platform resting on 2 parallel horizontal beams, called "needle beams", which are supported by ropes from overhead.

(12) Outrigger Scaffold. This term shall mean a scaffold, the platform of which is supported by outriggers or thrustouts from or through the wall of the building, with the inner end secured inside the building. (See Figure 10 for illustration.)

(13) Plasterer's Inside Scaffold. This term shall mean a scaffold constructed for light work inside a building, the platform of which is supported by trestles, ladders, or a light-duty pole scaffold.

(14) Roofing Bracket. A "roofing bracket" has sharp points that are driven into the roof to keep the bracket from slipping. It should be supported by means of ropes over the ridge secured to some permanent object on the far side of the roof, or by a hook over the ridge pole.

(15) Single Pole Scaffold. A "single pole scaffold," illustrated in Figure 3, is a platform resting on putlogs, the outer ends of which are supported on ledgers secured to a single row of uprights and the inner ends supported on or in a wall.

(16) Suspended Scaffold. A "suspended scaffold" is supported from overhead. The platform is supported at more than two points by steel wire cables suspended from outriggers which are anchored to the steel or concrete frame of the building. This scaffold is equipped with a hoisting machine so that the platform can be raised or lowered.

(17) Suspended Stage Platforms. A "suspended stage platform" is suspended from the hook of a crane or derrick or other approved mechanical weight-lifting device.

(18) Swinging Scaffold. A "swinging scaffold," illustrated in Figure 7, is a platform supported by stirrups at not more than two points. Stirrups are suspended from overhead supports to permit raising or lowering the scaffold to the required work level.

(19) Window Jack Scaffold. This term shall mean a platform which is sup-

ported by a jack or thrustout which passes through a window opening. (See Figure 9 for illustration.)

(20) Brace. This term shall mean a tie that holds one point in a fixed position with respect to another point. Bracing is a system of braces that prevents distortion of a structure such as a scaffold.

(21) Heavy Duty Scaffold. This term shall mean a scaffold designed and constructed to carry a working load of 75 pounds per square foot which is required for stone masonry work, construction work involving steel members, or similar construction. Such scaffolds support, in addition to the workmen, a supply of heavy material.

(22) Ledger (Stringer). A "ledger" is a scaffold member which extends horizontally from upright to upright at right angles to the putlogs. The ledgers support the putlogs and form a tie between the uprights, and are a part of the scaffold bracing. (Ledgers which do not support putlogs are called stringers.)

(23) Light Duty Scaffold. This term shall mean a scaffold designed and constructed to carry a working load of 25 pounds per square foot; such a scaffold is intended for the use of carpenters, painters, or others of a similar trade, and supports no load other than the workmen and a minimum of lightweight material.

(24) Putlogs (Bearers). A putlog is a scaffold member upon which the platform rests. In a single pole scaffold the outer end of the putlog rests on a ledger and the inner end rests on or in a wall. In an independent-pole scaffold, each end of the bearer rests on a ledger.

(25) Protective Covering. A protective covering is an overhead protection consisting of a roof of lumber, heavy wire screen, or heavy canvas, depending upon the hazard involved. Coverings are used to protect against falling material. Covering shall extend a sufficient distance beyond the edge of the scaffold to catch any falling material. The netting of screen shall be not less than No. 18 gage, U. S. Standard Wire, with a mesh not to exceed one-half inch. Screens of heavier wire or smaller mesh shall be used where conditions are such that the No. 18 gage wire or one-half inch mesh will not furnish adequate protection.

(26) Side Screen. A "side screen" is a screen paneling from platform to intermediate railing or from platform to the top railing. Screening is formed of No. 16 U. S. gage wire with one-half inch mesh. Screen is used for the purpose of preventing materials, loose or piled, from falling off scaffolds.

(27) Standard Guard Railing. "Standard guardrailing" is a vertical barrier erected along the exposed sides of scaffolds. The barrier consists of a top rail, an intermediate rail, and uprights having a vertical height of 42 inches measured from the upper surface of the top rail to the platform. The intermediate rail should be located approximately half way between the top rail and the platform. The intermediate rail may be of fiber or steel rope, pulled up taut and of strength equivalent to that of a wooden rail. The top guardrail shall be of dressed lumber, straight-grained and not less than 1-7/8 inch by 2-7/8 inches in size.

(28) Standard Toe Board. A "standard toe board" is a vertical barrier at platform level, erected along the exposed edges of a scaffold platform to prevent materials falling off. The height of toe board shall be at least nominal 6 inches.

(29) Square. A "square" is a frame structure built up of vertical and horizontal members and braces which, when used in pairs and set up and braced longitudinally, provides a support for a working platform. (See Figure 6 for illustration.)

b. Miscellaneous Precautions

(1) Use of Scaffolds. Scaffolds constructed in accordance with Navy requirements should be provided for personnel engaged in work that cannot be done safely from the ground or from other solid construction, except for such short-period work as can be done safely from securely placed ladders.

(2) Makeshift Scaffolds. Scaffolds of a type suitable for the work shall be pro-

564-350 O - 74 - 10

vided for the safety of the personnel performing such work. The use of "shore", "lean-to", or other makeshift scaffolds is prohibited.

(3) Maintenance. All scaffolds and scaffold equipment mentioned or described herein shall be maintained in a safe condition and shall not be altered or disturbed while in use. Personnel shall not be allowed to use damaged or weakened scaffolds.

(4) Inspection. Structural members, support ropes, and scaffold equipment shall be inspected daily before work is started.

(5) Protective Covering. When men are working on a scaffold with other workmen engaged directly above, either the scaffold shall have an overhead protective covering or the workers on the lower scaffold must wear approved protective hats. Where the upper working level is no more than 12 feet above the lower, hard hats worn by workers on the lower level will satisfy this requirement.

(6) Scaffolds Over Passageways. Employees should not be required to work underneath a scaffold. Scaffolds erected over passageways, thoroughfares, or locations where employees are working shall be provided with wide screens and a protective covering.

(7) Access. A safe means of access shall be provided to all scaffolds by means of standard stairs or fixed ladders.

(8) Construction and Dismantling. The erection, alteration, and dismantling of scaffolds shall be done only under the supervision of men experienced in scaffold work.

(9) Nails. When dismantling the scaffolding, all nails shall be immediately withdrawn from the lumber and safely discarded.

(10) Sway Bracing. Scaffolds shall be secured against swaying.

(11) Weather Restrictions

(a) Wind. Employees shall not be permitted to work on a scaffold during a storm or high wind.

(b) Ice and Snow. Employees shall not be permitted on scaffolds which are covered with ice or snow. Clinging ice shall be removed from all guardrails, and the planking sanded or otherwise protected against slipping. Platform planking should not be turned over if it is covered with sleet, snow, or ice.

(12) Improper Support. Unstable objects, such as barrels, boxes, loose tile blocks, and piles of bricks shall not be used for the support of scaffold planking.

(13) Used for Storage. No scaffold shall be used for the storage of materials, except that required for the immediate needs of the job.

(14) Material on Scaffold. Tools, equipment, material, and rubbish shall not be allowed to accumulate on scaffolds to a point where the safe movement of employees is jeopardized.

(15) Containers for Tools. Tools should be placed in containers to prevent their being knocked off. Containers should be secured to the scaffold by rope.

(16) Bracing for Load. Scaffolds shall not be used as loading or landing platforms for material unless they have first been sufficiently braced and reinforced for such purposes.

(17) Use of Clamps. When heavy loads, shocks, or vibrations must be resisted, bolted or patented clamp connections shall be used.

(18) Raising or Lowering Objects. Throwing or dropping objects or tools from scaffolds is prohibited. Hand lines shall be used for raising or lowering objects when they cannot be reached easily and safely by hand. Jumping by persons or throwing material upon a scaffold platform is prohibited.

(19) Painting. Scaffolds shall not be painted since painting conceals defects which otherwise would be apparent.

c. Safe Loads

(1) Specifications. Platforms and all supporting elements of scaffolds, whether of wood or any other material, shall be designed to support a minimum uniform load per square foot as follows:

Platform Loads

Use		*Uniform load per square foot*
Stone masons		75 pounds stone on scaffold
Stone setters, bricklayers	Heavy duty	40 pounds, no stone on scaffold; 50 pounds, stocked
Carpenters, miscellaneous; painters and decorators	Light duty	25 pounds
Stucco workers		30 pounds, hod stocked
Lathers and plasterers		30 pounds
Lathers, precast work		weight of bay, casts, and men

NOTE.—If concentrated load is used at any point in the span, it should not exceed one-half the allowable distributed load.

(2) Safety Factor. Scaffolds shall be capable of supporting the working load, with a safety factor of at least four. For guidance refer to *Design Specifications for Stress Grade Lumber* published by the National Lumber Manufacturers Association, Washington, D. C.

(3) Distribution of Load. Whenever possible, scaffold load should be uniformly distributed and not concentrated at the center of the platform.

(4) Overloading. Scaffolds must never be overloaded.

d. Specification for Lumber

(1) Thickness. Planking shall be of uniform thickness and laid close together. Planks may be lap- or butt-jointed.

(2) Width. Scaffold platforms shall be not less than 20 inches wide except as otherwise required by specifications herein.

(3) Kinds. Lumber used in the construction of scaffolds shall be either spruce, Douglas fir, southern (long-leaf) yellow pine, or wood of equal strength. Hemlock, short-leaf yellow pine, or other short fiber lumber shall not be used.

(4) Condition. Lumber shall be dressed (except scaffold plank may be rough), of good quality, reasonably straight grained, free from large and medium shakes, checks, splits, and unsound knots. The lumber shall be free also from dry rot and growth characteristics which impair its strength.

(5) Sizes. Lumber sizes used in these requirements refer to nominal sizes.

(6) Protection. When not in use, scaffold planks should be carefully stored and protected from the weather.

(7) Testing for Safe Load. Scaffold planking may be sample tested by center loading with an applied load equal to four times the working load. Any sample plank selected out of a lot shall be discarded even though it withstands the load, if it sustains any partial failure or remains deformed after such test loading. Other methods of testing scaffold plank may be used if recommended by the United States Forest Products Laboratory.

(8) Marking Safe Load. The maximum safe load and the date tested should be plainly indicated on the planking by stamping or other method. Safe loads are indicated in the table on the following page.

e. Ropes, Lines, and Cables

(1) Quality. Ropes and cables used in suspension and swinging scaffolds shall be of the best quality steel, manila, or sisal in accordance with the applicable Federal or Military specifications.

(2) Safety Factor. All ropes supporting scaffolds shall be manila or sisal rope and shall have a safety factor of at least six, and shall be inspected before being used on each job to ascertain whether they are sound and free from flaws or deterioration from weathering and from contact with any corrosive chemicals.

(3) Hook Attachment. Where ropes supporting scaffolds are not attached directly to hooks, the extension from the top block to the support shall be at least a one-half inch wire rope.

Safe Center Loads for Platform Plank (in Pounds)
(1,100 lbs. fiber stress[1])

Span in feet	2 x 10 dressed to 1-5/8 x 9-1/2	2 x 12 dressed to 1-5/8 x 11-1/2	3 x 8 dressed to 2-5/8 x 7-1/2	3 x 10 dressed to 2-5/8 x 9-1/2	3 x 12 dressed to 2-5/8 x 11-1/2
6	256	309	526	667	807
8	192	232	395	500	605
10	153	186	316	400	484
12	128	155	263	333	404
14	110	133	225	286	346
16	...	116	197	250	303

[1]Values are for one plank supported at the ends, wide side of plank face up, and with loads concentrated at the center of the span. For loads uniformly distributed on the wide surface throughout the length, the safe loads may be twice those given in the table. Loads given are net and do not include weight of the plank.

(4) Lifelines and Safety Belts. Lifelines and safety belts shall be used when working on a boatswain's chair, and on unguarded scaffolds at heights of 10 feet and above. Manila or sisal rope used as lifelines shall be 5/8 inch in diameter. See Figure 8 for illustration of use of lifeline for moving scaffold platforms.

(5) Cleaning Buildings. When cleaning buildings with solutions containing chemicals injurious to hemp rope fibers, wire ropes shall be used wherever possible for swinging scaffold supports.

(6) Safety Belts. Where required workmen shall wear Navy approved safety belts which have been securely attached to a safety line by a mechanical safety device.

(7) Damaged Rope. Rope which has been in contact with acid shall be immediately removed and destroyed.

(8) Fall Line. The fall line shall be kept on the outside of the scaffold, with the free end in a box or barrel, located so that the rope will slope away from the building or structure.

(9) Open Flame. Burning or welding, blow-torch operations, or the presence of any open flame shall not be permitted on a scaffold supported by a fiber suspension rope or sling. Should such operation be necessary, the sling or suspension shall be of wire cable.

f. Scaffold Nails

(1) Importance. The safety of a structure depends upon the nails as well as upon the timbers selected. The safety of a nail connection depends upon the resistance of the timber and not upon the material of the nail.

(2) Nail Requirements

(a) Minimum size. Nails smaller than 8d common shall not be used. Nails shall be driven full length.

(b) Lateral resistance. The quantity and size of nails used shall be determined by values in pounds for each size (as shown in the following table) and for materials being used as applied to the total load to be supported.

(c) Parallel pull. Nails will not be used so that the pull is parallel to the length of the nail.

(d) Special designs. Where special scaffold designs are required the quantity and size of nails to be used shall be in accordance with *Design Specifications for Stress Grade Lumber* published by the National Lumber Manufacturers Association, Washington, D. C.

Lateral Resistance in Pounds per Nail in Rocky Mountain Douglas Fir[1]

Size of nail	8d	10d	12d	16d	20d
Perpendicular[2]	65	80	80	90	115
Parallel[3]	45	55	55	60	80

[1]Values for other woods such as coastal region Douglas Fir and Southern pine may be 20 to 25 percent greater.
[2]Nails driven perpendicular to grain.
[3]Nails driven parallel to grain.

(3) Spacing. Nails should not be driven closer than one-half of their length from the end of the board nor nearer than one-quarter of their length from the edge of a board.

2. All-Pole Scaffolds

a. Foundations

(1) Poles Plumb. All poles or posts shall be set up plumb.

(2) Footings. Scaffold poles shall not stand directly on the ground but shall bear on a footing of sufficient area and strength to spread the load in order to prevent settlement. When the footing is of wood it should be a solid block not less than 1 foot square by 2 inches thick. The footing block shall be placed on solid ground and sufficiently below the surface to prevent displacement. The base of the pole shall be set and securely held in the center of the block.

(3) Bracing. When a pole is set directly on a solid object such as a sidewalk, it shall be blocked or braced against movement.

b. Splicing Poles or Posts

(1) Ends Squared. When poles are spliced, the squared end of the upper section shall rest upon the squared end of the lower section, and the two ends shall be rigidly fastened together with no less than two wooden splice plates.

(2) Splice Plates. Splice plates should be at least 4 feet long and of the same width as the uprights. The plates shall be securely nailed in place on adjoining sides of the poles. The combined cross-sectional area of the splice plates shall be not less than that of the pole, and the plates should be placed so that they overlap the abutting ends of the pole equally. They shall be located so as not to interfere with the nailing of ledgers or putlogs.

(3) Overlapping Ends. In light-duty scaffolds not more than 24 feet in height, uprights may be spliced by overlapping the ends not less than 4 feet and securely nailing them together. A substantial cleat shall be nailed to the lower section to form a support for the upper section.

(4) Staggering Splice. Splicing shall be staggered. Adjacent uprights, either transverse or longitudinal, shall not be spliced at the same level.

c. Bumpers as Protection. As a protection against the impact of vehicles and personnel, the bases of uprights shall be protected from displacement by bumpers set independent of the scaffold.

d. Planking on Putlogs and Bearers

(1) Lapping Ends. Each platform plank shall be of sufficient length to extend over three putlogs. Ends shall be lapped over the putlog.

(2) Planks Overlapping. When planks overlap, a single putlog is sufficient. The ends of both the upper and lower planks should overlap the putlog by at least 6 inches.

(3) Planks End to End. When planks are laid end to end, two parallel putlogs shall be provided not more than 8 inches apart so that one putlog will support the end of one plank and the other putlog the end of the other plank. Two successive lengths of planking shall not abut beyond a single putlog.

(4) Projection over Putlog. Planking shall project over the last putlog at the end of the scaffold by at least 6 inches, but in no case more than one foot.

(5) Turning Corner. When a scaffold turns a corner, the planks shall be laid to prevent tipping. The planks that meet the corner putlog at an angle shall be laid first, and extend over the diagonally braced putlog

far enough to have a good safe bearing, but not far enough to involve any danger from tipping; then the planking running in the opposite direction, at right angles, shall be laid so as to extend over and rest on the first layer of planking.

e. Ledgers

(1) Shifting Platform. When a platform is shifted or raised, the new ledger boards shall first be nailed to the uprights at the proper height; then the putlogs that are to support the new platform shall be set.

(2) Placed against Inside Face of Pole. Ledgers shall be securely nailed or bolted to each upright and, except where they interfere with the bracing, shall be placed against the inside face of the pole.

(3) Nailed Level. All ledgers shall be nailed up level. In the case of single-pole scaffolds, the top edges of the ledger shall be at the same height as the bottom of the openings in the wall which receives the inner end of the bearers, so that both bearings will be at the same level.

(4) Leave old Ledger in Place. As the platform is raised with the progress of the work, the ledgers upon which it previously rested shall be left in place to brace and stiffen the upright until the scaffold is dismantled.

(5) Old Platform. The old platform shall be left undisturbed until the new putlog has been set in place. Also, until the working platform is entirely planked over, it is advisable to leave a platform two or three tiers below the working platform, to lessen the severity of injury should men fall, and as a protection to persons below from falling materials.

(6) Overlap. Ledgers shall be long enough to extend over two upright pieces and should overlap the poles by at least 4 inches. Where two ledgers overlap on the same upright, each shall be securely fastened; one first being nailed to and through the inner one. Nails should be kept distributed.

(7) Splicing. In heavy-duty scaffolds, the combined cross-sectional area of the splice plates shall not be less than the cross-sectional area of the ledger. The splice plates shall be so placed as to overlap the abutting ends of the pole equally and shall be so located as not to interfere with the nailing of ledgers. Ledgers shall always be spliced at poles.

(8) Ledgers at Right Angle. When two ledgers meet at right angles on a pole, one shall be fastened on the inside and its end cut off flush with the face of the pole, and the other fastened on the outside and overlapping the inside one.

(9) Reinforcing Ledgers. Ledgers supporting heavily loaded platforms shall be reinforced by bearing plugs, braces, or cleats securely nailed to the side of the pole, forming a support for the ledger.

f. Bearers or Putlogs

(1) Greater Dimension Vertical. Bearers and putlogs shall be set with their greater dimension vertical, and shall be long enough to project at least 3 inches over the ledger beyond the outer row of poles, and the same distance beyond the inner row (of independent pole scaffolds).

(2) Support. Bearers shall be supported on the ledger located against the sides of the pole and nailed to both the pole and ledger. Where intermediate bearers are used for the support of planking, the ledger shall be reinforced as necessary.

g. Bracing of Scaffolds

(1) Diagonal Bracing. Diagonal bracing shall be provided to prevent the poles from moving in a direction parallel with the building, or from buckling.

(2) Between Inner and Outer Uprights. Cross bracing shall be provided between the inner and outer sets of poles in independent-pole scaffolds.

(3) Free End Bracing. The upper free ends of pole scaffolds shall be cross-braced.

(4) Away from Building. Braces which are used for the purpose of holding the scaffold at a fixed distance from the building shall be secured to the pole.

(5) High Scaffolds. Scaffolds which extend to a height of more than 40 feet and support heavy loads of material shall be thoroughly and substantially braced.

h. Guard Rails

(1) Open Side. A standard guardrail and toeboard shall be provided on the open side of the platform on all single-pole and independent-pole scaffolds.

(2) Building Side. If the space between the scaffold and building is more than 18 inches, a standard guardrail shall be erected on the building side.

i. Specifications for Members. Nominal dimensions of lumber and spacing of scaffold members are given in the following tables. (See article 0836.1c and e for standards for planking, loading, and nailing, and Figures 1-3 for illustrations.)

3. Single-Pole Scaffolds (See Figure 3)

a. Ledgers as Braces. Ledgers shall be left in place to brace the scaffold after platform planks are removed.

b. Putlogs. In a single-pole scaffold the inner end of the putlog shall rest in the wall of the building with at least a 4-inch bearing. The putlog shall not be notched out or cut down, except in alteration or light repair work, when it may be notched or cut

Minimum Dimensions of Lumber for Pole Scaffolds[1]
(Load in pounds per square foot)

Member	25 lb. load	Over 25 lb. and not over 75 lb.[2] load	
	Single and independent pole (inches)	Single pole (inches)	Independent pole (inches)
Poles:			
24 ft. or less	2 x 4	3 x 4 or 2 x 6	3 x 4 or 2 x 6
Over 24 ft., not over 40 ft.	3 x 4 or 2 x 6	4 x 4	(3)
Over 40 ft	(2)	(2)	(2)
Stringers:			
24 ft. or less	1 x 6	1 x 6	1 x 6
Over 24 ft., not over 40 ft.	1 x 6	1 x 6	2 x 8
Putlogs or bearers	4 x 6 or 2 x 6 on edge.	4 x 4 or 2 x 8 on edge.	2 x 8 on edge.
Ledgers	2 x 6	2 x 8	2 x 8
Braces	1 x 4	1 x 6	1 x 6
Planking	2 x 10	2 x 10	2 x 10
Toeboards	1 x 6	2 x 6	2 x 6
Guardrails	2 x 4	2 x 4	2 x 6

[1]See loading standards, article 0836.1d(8).

[2]Pole scaffolds carrying more than 75 pounds per square foot load and greater than 40 feet in height shall be designed by a qualified engineer in accordance with "Design Specifications for Stress Grade Lumber," of the National Lumber Manufacturers' Association (latest revision), Washington, D. C.

[3]Over 25 lb. and not over 50 lb. shall be 4″ x 4″; over 50 lb. and not over 75 lb. shall be 4″ x 6″.

Spacing of Scaffold Members

Member	25 lb. per sq. ft. load or less	Over 25 lb. but not over 75 lb. per sq. ft. load
All pole maximum spacing (longitudinal).....	7 ft. 6 in.	7 ft.
Independent pole minimum spacing (transverse):		
24 ft. or less.....	6 ft. 6 in.	6 ft. 6 in.
Over 24 ft., not over 40 ft.	7 ft. 6 in.	10 ft.
Ledger maximum spacing (vertical)	7 ft.	4 ft. 6 in.
Single pole spacing from wall.....	3 to 5 ft.	3 to 5 ft.

down to fit into a space made by the removal of a brick. In such cases, the notch shall be made on the upper side of the putlog and only deep enough to permit its being inserted in the hole in the wall.

c. **Spring Staybraces.** When putlogs are removed in single-pole scaffolds, spring staybraces shall be inserted to take their place, and shall be located in at least every alternate upright of every row of putlogs. When a brick is inserted for holding the two boards of a spring stay apart, it should be kept near the wall to ensure a good grip of the brace in the hole of the brick work.

d. **Attached to Frame Building.** When the inner end of a putlog is attached to a frame building, a piece of lumber not less than 2 x 6 x 12 inches, shall be notched out the width of the putlog and not less than 2 inches deep, and nailed to the side of the building to form a bearing.

e. **Securing Putlog.** The end of the putlog shall rest on the bearing and shall be nailed to both the bearing and the building.

f. **Window Sill Support.** When the inner end of a putlog goes through a window opening, it shall be supported on a thick plank or other support resting on the window sill. The support shall be securely braced against displacement.

4. **Independent Pole or Built-Up Scaffolds**

a. **Specifications.** See article 0836.2i for dimensions and spacing of members and Figures 1 and 2 for illustrations.

b. **Placing Inner Poles.** The inner row of poles shall be set as near to the building as practicable and still allow workmen ample working space.

c. **Bracing Poles**

(1) The outer row of poles should be connected by diagonal braces at an angle of about 45°.

(2) The bracing shall be securely fastened to the pole by a sufficient number of nails.

(3) Diagonal braces should run up across the entire face of the scaffold in both directions. Braces should be spliced at the poles.

(4) In very high or heavy duty scaffolds, the inner row of poles should also be braced in the manner described in the preceding paragraph.

5. **Barge (Pontoon) Scaffolds**

a. **Purpose.** Scaffolds shall be constructed to ensure adequate rigidity under sudden surges, such as those caused by water swells.

b. **Weather Restrictions.** Personnel shall not be permitted on a barge scaffold in rough weather.

c. **Dock Trial Restrictions.** During dock trial of a ship, barge scaffold work shall not be permitted.

d. **Safety Belts.** Safety belts, secured to scaffold, shall be worn by personnel if "rocking" of scaffold is severe enough to make it difficult to maintain proper balance at all times.

e. "Camels." When working between two ships or between ship and dock, "camels" shall be provided to prevent crushing of barge through movement of the vessels.

f. Ships' Engines Secured. Before men are permitted to perform work from a scaffold at or near the stern of a ship, definite assurance must be obtained by the hull superintendent from the officer of the deck that the ship's engines have been secured. When possible, barge shall be kept clear of propellers.

g. Wood Constructed. When barge scaffolds are constructed of wood, the following table shall govern:

Poles	4 in. x 6 in.
Putlogs	3 in. x 6 in.
Splices	2 in. x 6 in.
Braces	1 in. x 8 in.
Pole spacing (longitudinal)	7 ft. to 10 ft.
Pole spacing (transverse-bottom)	12 ft.
Pole spacing (transverse-top)	8 ft. to 10 ft.
Planking	2 in. x 10 in.
Height between platforms	8 ft.

h. Tubular Pole. Tubular pole scaffolds shall be erected in accordance with "Tubular Pole Scaffolds" requirements in article 0836.6.

i. Proportional Dimensions

(1) Width. In no case shall the over-all width of the erected poles be more than 80 percent of the width of the barge upon which it is erected.

(2) Length. The distance between end poles shall not exceed 80 percent of the barge length.

(3) Height. The height of the working platform shall not be greater than the over-all distance between the end poles.

(4) Weight. Weight of scaffold shall not constitute more than 50 percent of the total displacement of the barge scaffold system.

(5) List. The maximum working load concentrated at the greatest point of leverage shall not cause the barge scaffold to list more than 3°. Ballast may be employed to correct this list.

j. Center of Gravity

(1) Keep Low. The combined center of gravity of the barge and scaffold shall be kept as low as possible.

(2) Line of Buoyancy. The combined center of gravity of the barge and erected scaffold shall be in the same vertical line with the center of buoyance when the barge with scaffold is floating in still water. If necessary, ballast permanently secured to barge may be used to effect this condition.

(3) Metacentric Height. The height of the scaffold and the length of the cantilever putlogs beyond the inboard poles shall be limited to those distances which will ensure a metacentric height sufficient for adequate initial stability or "righting arm".

k. Attaching Scaffold to Barge

(1) Angle Clips. All poles shall be firmly secured to the deck of the barge by means of two 6-inch by 6-inch angle clips.

(2) Centered. Poles shall be centered on the barge in all directions.

(3) Bolts. Clips shall be welded or bolted, as appropriate, to the deck, and so spaced that the backs fit snugly against the 6-inch side of the uprights. They shall be bolted in this position, from one to the other through the uprights, by not less than three nor more than four 1/2-inch galvanized steel bolts. Bolts shall be equipped with lock washers.

l. Requirements for Barges

(1) Free Board. Barges upon which a scaffold is erected shall have a minimum of 1 foot of free board.

(2) Design. Barges shall be of an approved design and shall be thoroughly seaworthy in every detail.

(3) Deck Fittings. Barges shall be equipped with such deck fittings as will permit proper maneuvering and mooring.

(4) Hatch Covers. Hatch covers shall be equipped with rubber gaskets and dogs. Covers shall be firmly battened down except when opened for entering or leaving a hull.

(5) Fenders. Barges shall be equipped with fenders.

(6) Hull. Barge hull shall be maintained in a watertight condition.

(7) Alongside Ship. When in position alongside of ship the barge shall be secured to ship.

(8) Platforms. Standard guardrails and toeboards shall be provided along the sides of the platform not used for performing work.

(9) Width of Gap. The gap between the working platform's edge and the ship's hull shall not exceed 1 foot.

(10) Life Ring. At least one life ring shall be provided on a barge.

6. Bricklayer's Square Scaffolds (See Figure 6)

a. Dimensions

(1) Tiers. When this type of scaffold is used, it shall be built up not more than three tiers or squares high. The tiers shall be braced together both front and rear, to give stability and rigidity.

(2) Details. The squares shall be of clear material not larger than 5 feet on each side and shall be framed as shown in Figure 6. The main members shall be 2 by 4 with top and bottom members overlapping the uprights. The corner braces shall be 1 by 6 and the main diagonal braces shall be 1 by 8.

b. Bracing

(1) Cross Bracing. Cross bracing shall be placed laterally from the bottom of each square to the top of the adjacent squares. Such bracing shall be 1 by 6 material.

(2) Side Bracing. The squares shall have 1 by 6 lateral side braces on both sides running from the center of each member to the center of the adjacent member.

c. Spacing Squares

(1) Distance Between. The squares shall be spaced not more than 5 feet apart on heavy-duty scaffolds and not more than 8 feet apart on light-duty scaffolds.

(2) Superimposed. When erected in squares the squares shall be placed one directly above the other.

d. Support of Scaffolds. The scaffolds shall be set up on a level and unyielding foundation.

e. Planking

(1) The upper tier shall stand on continuous rows of planks laid across the lower tier.

(2) Planks shall be nailed or cleated.

(3) Each plank should extend over three squares.

(4) The ends of planks shall overlap the squares by at least 4 inches and not more than 6 inches.

7. Tubular Pole Scaffolds

a. Personnel. Only experienced or properly trained personnel shall erect, dismantle, or rearrange tubular pole scaffolding.

b. Material Used. The scaffold members shall be of galvanized steel tubing or other corrosion resistant metal of equal strength.

c. Locking Device. All vertical and horizontal members of a scaffold shall be fastened together with a coupler or approved locking device forming a positive connection to prevent movement of the scaffold when in use. The locking device shall be of a type having no loose parts.

d. Material Used in Locking Device. The locking device or coupler shall be of drop-forged steel, galvanized, or material of equal strength and corrosion resistance. Use of gray cast iron fittings is prohibited.

e. Dimensions of Members. In the construction of tubular pole scaffolds members of the dimensions listed in the table on page 8-39 should be used.

f. Safety Factors. Scaffolds shall be designed to have a factor of safety of not less than four.

g. Putlogs

(1) Attaching. Tubular putlogs shall be placed at right angles to the runners and attached thereto with couplers.

(2) Location. Putlogs shall be located at each set of uprights and at each level including intermediate levels where working platforms are installed.

(3) Overhang. Putlogs shall overhang at least 10 inches beyond the inside and outside uprights.

Member	Light-duty	Medium-duty	Heavy-duty
Pole	2 in. O.D.	2 in. O.D.	2 in. O.D.
Putlog	2 in.	2-1/2 in.	2-1/2 in.
Runner	2 in.	2 in.	2 in.
Bracing	2 in.	2 in.	2 in.
Pole Spacing			
Longitudinal	10 ft.	8 ft.	6 ft. 6 in.
Transverse	6 ft.	6 ft.	6 ft.

NOTE.–For scaffolds up to 75 feet in height, poles of 2-inch O.D. tubing, as per table, should be used. For heights 75 feet to 200 feet, 2-1/2-inch O.D. tubing shall be used.

(4) Pitch. The putlogs should have a slight downward pitch towards the building wall.

(5) Clincher Plate. In the case of single-pole tubular scaffolds, the putlogs should be equipped on the inner end with a 3/16-inch steel clincher plate which hooks into the vertical brick joint.

h. Runners

(1) Locking. The tubing forming the runners shall be locked end to end with fittings and secured to each intersecting upright with couplers.

(2) Leveling. The bottom runner shall be leveled both lengthwise and crosswise.

(3) Proper Height. When attaching the upper runner, the couplers should first be located at the proper height on the upright by means of a measuring stick.

i. Bracing. Tubular bracing shall be applied both lengthwise and crosswise, as required.

(1) Lengthwise. Lengthwise bracing shall be located on the outer face of the scaffold and secured to the projecting ends of the putlog with couplers, or in some other approved manner.

(2) Crosswise. Crosswise bracing shall be located on every fourth or fifth set of poles and attached with couplers to the runners at alternate levels.

(3) Keeping Scaffold Plumb. The scaffold shall be kept plumb and rigid by means of adequate bracing.

j. Poles

(1) Keep Plumb. Poles shall be kept plumb during erection.

(2) Firm Foundation. Poles shall be fitted with bases supported on a firm foundation or on sills to distribute the load. When wooden sills are used, the bases shall be fastened thereto.

(3) Adjustable Couplers. At the foot of poles where there are no horizontal runners or putlogs to attach to, adjustable couplers shall be used for attaching the bracing to the poles.

8. Rolling Scaffolds

a. Structural Requirements. Construction of rolling scaffolds shall conform to the requirements for tubular pole scaffolds. They shall be constructed either in accordance with manufacturer's recommendations or in accordance with special designs by Navy engineers. The feet of such scaffolds shall be equipped with wheels or casters, especially made for this purpose, which are capable of being positively clamped or locked to prevent rolling.

b. Responsibility for Movement. The senior military or civilian supervisor present shall be responsible for safe movement of rolling scaffolds. Such scaffolds shall not be moved except at his command. He shall take particular care that the scaffold does not foul overhead electric or telephone lines, roof members, or suspended fixtures. NO PERSON SHALL REMAIN ON THE SCAFFOLD WHILE IT IS BEING MOVED.

9. Suspended Scaffolds

a. When Used. The use of a suspended scaffold is recommended for all buildings more than five stories high to which outriggers can be adequately fastened.

The parts of the building or structure to which a suspended scaffold is attached shall be examined to determine if such parts are of sufficient strength to support properly and safely the load that will be applied to the scaffold.

b. Approved Type. Scaffold hoisting machines shall be of a design approved by the Underwriters' Laboratories.

c. Never Used for Heavy Material. Suspended scaffolds shall never be used for the storage of stone or heavy materials.

d. Workload. Suspended scaffolds shall be capable of sustaining a working load of 40 pounds per square foot.

e. Webs Vertical. All beams and channels shall be set with their webs vertical.

f. Hoisting Machine. Suspended scaffolds shall be provided with a hoisting machine of either the platform or overhead type.

g. Experienced Men. Experienced men only shall be permitted to operate the machine.

h. Outriggers

(1) Anchoring. The outriggers should consist of steel I-beams, each securely anchored to the framework of the building by U-bolts and anchor plates or other equally safe means.

(2) Channel Irons. If channel irons are used instead of I-beams, they shall be in pairs, placed back to back and fastened together with bolts or clamps. Where greater bearing width is required, pipe separators may be used.

(3) Strength. The outriggers shall be equivalent in strength to standard 7-inch 15.3-pound I-beams and shall be at least 15 feet long.

(4) Projection. The outriggers shall project at least 1 foot beyond the outer edge of the suspended platform.

(5) Stop-Bolt at End. A stop-bolt shall be placed at the outer end of every outrigger.

(6) Securing. When the inner end of the outrigger extends inside the building, it shall be secured to the building structure.

(7) Placing Shackles. The shackle supporting the outside cable shall be placed not more than 6 feet beyond the bearing point of the outrigger on a 4-foot scaffold; and the shackle supporting the inner cable shall be placed not more than 2 feet beyond the bearing point of the outrigger. When the platform is wider than 4 feet, the inner and outer suspension cables shall be so located as to hang vertically.

(8) Raising Outrigger. When it is necessary to raise the outrigger above the supporting beam, it shall be blocked up on the supporting beam with steel or hardwood blocking.

(9) Support for Platform. When platforms wider than 4 feet are required, the strength of the outriggers shall be increased accordingly.

i. Bearers

(1) Dimensions. The platform bearers shall be of steel, not less than a pair of 2 by 2-3/16-inch standard angles, or other sections of equivalent strength. If wooden bearers are used, they shall be of long leaf yellow pine, not less than 4 by 6 inches. Wood of equivalent strength can be used, with the greater dimension vertical.

(2) Support for Hoisting Machine. The supporting frame of the hoisting machine shall be bolted to the bearers at the outer and inner ends with bolts not less than 5/8 inch in diameter.

(3) Length. The bearers shall be of sufficient length to receive at least six 8-inch planks with the inner and outer row of planks passing through the supporting frame of the hoisting machine.

(4) Planks. The platform planks shall be laid close together and overlap the bearers at each end of the scaffold by not more than 18 inches.

(5) Connections. When conditions arise where the use of the standard U-bolt connection is not practicable, the beam clamp connection should be used.

j. Cables

(1) Connection. The lower end of the supporting cable shall be secured to the hoisting machine by passing the end of the cable through a hole in the drum and securely fastening it by a clip; or by passing it through

a hole in the web of the rachet wheel, and making a socketed connection.

(2) Prevention of Swinging. Strap-iron hooks shall be wired to the suspension ropes near the platform level and hooked onto the building to prevent the scaffold swinging away from the building. Fenders shall be used, consisting of pieces of plank nailed to the platform and projecting inward towards the building.

(3) Terminals. The upper ends of the cables shall terminate in a spliced loop in which a steel ring or eye is inserted. The bolt passing through the shackle and ring shall be drawn up tight by a nut and lock-nut.

(4) Secured to Outriggers. The suspension cables when fixed at their upper ends shall be secured to the outriggers by wrought-iron shackles and bolts.

(5) Steel Rope. Steel wire ropes should be used for the support of suspended platforms in preference to steel ribbons or chains. Such ropes shall have a breaking strength of not less than 5 tons.

(6) Hanging Vertical. As a guide in determining the width of the platform, the suspension cables should hang as nearly vertical as possible.

k. Safety Belts. Every man going out on an outrigger shall be provided with and shall wear a safety belt to which shall be attached a lifeline securely fastened to the building. The lifeline shall be only of sufficient length to permit the work on the outrigger to be performed, and so that in the event of a fall, the fall will be broken as quickly as possible.

l. Inspection of Bolts. Frequent inspection shall be made to see that the threads on all bolts are perfect, that the nuts fit, and that the cable clamps are securely fastened to the outriggers.

m. General Inspection. All parts of a suspended scaffold shall be inspected daily.

n. Side Screen. The space between the toe board and the guardrail shall be filled with 16-gage, 1-1/2-inch mesh wire netting.

o. Working Parts Exposed. All working parts of scaffold hoisting machines shall be left exposed so that defective parts or irregular working of the machine can be easily detected.

10. Suspended Stage Platforms. Suspended stage platforms shall not be rigged to a marine derrick or other weight-lifting device when it is practicable to use other types of staging.

a. Not Rigged to Derrick. A suspended-stage platform shall not be rigged to a marine derrick or other weight-lifting device when wave action will disturb the steadiness of the platform.

b. Members of Steel. The foundation members of a suspended stage platform shall be of structural steel. Channels, angles, T, H, or I-beams may be used.

c. Member at Center of Gravity. In the construction of the platform frame, in addition to the members placed at each end, a member shall also be placed on the center of gravity of the platform. (Center of gravity is that for the designed platform without load and counterweight.)

d. Wire Rope. Approved wire rope connections shall be used.

e. Safety Factors and Tests. The frame shall be capable of supporting a load equal to four times the maximum working load. When testing, the load should be applied at the diagonal corners with the frame balanced over a fulcrum.

f. Sling Legs. Sling legs shall support platform at each corner at the counterweight end and at a point on each side of frame as near as is practicable to the end of the platform used by the employees.

g. Testing Crane and Boom. Before platform is actually used, a test shall be conducted to determine the stability of the crane or derrick and the safe working radius of the boom with the working load on the platform.

h. Boom Radius. Under actual use, the boom radius shall not be increased beyond that found to be safe.

i. Qualified Operator. The hoisting, lowering, and lateral movement of suspended platforms shall be under the direction of qualified riggers. They shall give all signals to crane or derrick operators.

j. **Determining Overturning Moment.** In the design of a suspended-stage platform, the overturning moment shall be determined on the basis of the maximum number of employees at work on the platform at any one time, concentrated at one end. This concentrated weight, times its distance from the fulcrum legs of the sling, shall be not more than one-fourth of the weight of the counterweight times its distance from the fulcrum.

k. **Wire Rope Slings**

(1) Safety Factor. Suspended-stage platforms and wire rope slings shall be designed so that the strength is equal to the working load with a safety factor of four.

(2) Attaching Slings to Platform. Approved methods shall be used for attaching wire rope slings to platform frame.

(3) Specifications. Wire rope slings shall be of 6 by 19 improved plow steel and shall not be less than 3/4 inch diameter.

(4) Limited Use. Wire rope slings used for supporting a platform shall not be used for any other purpose.

(5) Platform Suspended. The platform shall be suspended from a four-legged wire rope sling.

l. **Planks Bolted to Frame.** Platform planks shall be bolted to the frame. Bolt heads shall be counter-sunk.

m. **Guardrails.** Suspended-stage platforms shall be equipped with either pipe or angle-iron standard guardrails and toe boards along such portions of each side and end not actually used for performing the work.

n. **Hooks Moused.** Hooks used for suspended-stage platforms shall be adequately moused.

o. **Guidelines.** Tag or guidelines, used for steadying or keeping suspended platforms in position, shall be attended by an experienced tradesman.

p. **Use of Platforms as Elevators.** Platforms shall not be used for the elevation of employees, materials, or equipment other than that determined to be needed for the immediate job.

q. **Counterweights.** A counterweight shall be of iron or concrete. It should be placed and secured at a point at least 12 inches from the end of the platform, opposite the end which will be used by the employees.

r. **Life Rings.** At least two life rings shall be attached to platforms suspended over water.

s. **Boarding Platforms.** Employees shall board and leave platforms at designated places.

t. **Jumping on Platforms.** Jumping on or off platforms is forbidden.

11. **Boatswain's Chair** (See Figure 7).

a. **Dimensions of Chair.** The chair shall be a seat not less than 2 feet long and 1 foot wide by 1-1/4 inches thick.

b. **Cleats.** Where practicable, cleats should be screwed to the underside of each end of the chair and project at least 9 inches in front of the seat.

c. **Suspension Rope.** The chair shall be supported by means of a sling attached to a suspension rope. This rope shall either be securely fastened to a fixed object overhead or pass through a securely fastened overhead block. The free end shall be fastened to a fixed and easily accessible object.

d. **Strength of Sling.** The sling shall be of at least 5/8-inch diameter manila rope, or its equivalent in strength.

e. **Stirrups.** When the suspension rope is attached to a pole by means of a hitch, the workman shall be provided with stirrups supported independent of the chair, upon which he can rest his weight while he is shifting the pole hitch.

f. **Safety Belt.**

(1) Lifeline. Every workman using a chair shall be provided with a safety belt. The safety belt shall be attached to a hanging lifeline secured to a fixed object.

(2) Tail Line. Where a tail line on the safety belt is used to connect to the hanging lifeline, a rolling hitch should be used to make such connection.

g. **Open Flame.** Burning and welding, blow-torch operations, or the presence of any open flame shall not be permitted on or near a chair unless suspension ropes and sling are of steel. In such cases, the sling shall be of at least 3/8-inch diameter wire rope.

12. **Float (Ship) Scaffolds**

a. **Purpose.** Scaffolds of this type shall be used only for the support of men doing riveting or other light work.

b. **Open Flame Nearby.** Burning and welding, the use of a blowtorch, or the presence of any open flame shall not be permitted on or nearby float scaffolds unless suspension ropes are of steel. The use of fiber rope under these conditions is prohibited.

c. **Number of Men.** A maximum of two men shall be permitted to work on a scaffold.

d. **Dimensions**

(1) The plank bearers shall be not less than 2 inches by 8 inches and should project not less than 6 inches beyond the platform on both sides. A diagonal plank, not less than 1 inch by 6 inches, shall extend from bearer to bearer underneath the platform. Each platform plank shall be nailed to this diagonal board and to the two parallel plank bearers.

(2) The holes in the bearer planks, as specified above, should be approximately 2 inches outside the outer planks.

(3) Platforms shall not be more than 5 feet wide and 8 feet long.

(4) Ends of platform planks shall extend at least 6 inches but not more than 12 inches beyond the outer edges of the bearers.

e. **Rope Size.** Rope shall be not smaller than 7/8 inch in diameter.

f. **Support of Platform.** The platform shall be supported by a continuous rope at each end. The ends of each rope shall be securely fastened to an adequate overhead support.

g. **To Prevent Slipping.** The platform shall be so secured to the rope that slipping is impossible. A bowline knot should be used. Rope should pass downward through a 1-inch hole in the bearer plank, be angle-hitched around the bearer plank and pass along beneath it to the other end, where it should be angle-hitched and passed upward through the 1-inch hole to the overhead support.

13. **Interior-Hung Scaffolds**

a. **Substantial Beams.** Where an interior-hung scaffold is required for ceiling work, it shall be hung or suspended from substantial beams of the roof structure.

b. **Dimension of Materials.** For interior-hung scaffolds, the following minimum nominal size material shall be used:

Bearers	2 x 10 in. (12 ft. on center)
Joists	3 x 4 in. (24 ft. on center)
Wire Cable	1/2 in. diameter
Spacing of cables	10 ft. to 12 ft.

c. **Work Load.** Irrespective of the above schedule, all interior-hung scaffolds shall be designed to sustain a uniformly distributed workload of at least 15 pounds per square foot. When used for plastering, this scaffold shall be designed to sustain a distributed working load of at least 25 pounds per square foot. A factor of safety of four shall be applied in both cases.

d. **Cables Securely Fastened.** The interior-hung scaffold shall be supported by means of wire cables, which shall be wrapped twice around the supporting member and twice around the bearer of the scaffold.

e. **Cable Slips.** Each end of the cables shall be secured by at least three standard cable clips.

14. **Masons' Swinging Scaffolds**

a. **Design of Scaffold.** Swinging scaffolds intended for masons' use in setting stone or cleaning down walls, shall be similar in design to other swinging scaffolds, but shall have a platform at least 30 inches wide suspended from overhead steel beam outriggers with steel wire cables and operated by a scaffold machine.

b. **Use of Two Scaffolds.** When two or more such scaffolds are in use on a building, they shall not be bridged across one to the other or lashed together.

c. **Platform Construction.** The platform shall be not more than 20 feet in length and constructed with 4-inch channel at each end. Channel shall be laid flat with flanges down and slotted to receive the machine hangers.

d. Stringers. The two side stringers should be bolted to the channels.

e. Tie Rod. There shall be a 5/16-inch diameter tie rod located 7 feet from each end of the platform, passing through the side stringers and drawn up tight with washers, nuts, and lock nuts.

f. Guardrail. A standard guardrail shall be secured to angle iron uprights, bolted to the stringers.

g. Uprights. The uprights shall be located at each end of the platform with two in between, equally spaced. The space between the guardrail and platform shall be provided with a side screen.

15. Needle-Beam Scaffolds (See Figure 4)

a. When Used. Needle-beam scaffolds shall be used only for the support of men doing riveting and other light work.

b. Dimensions of Wood. Needle beams not more than 12 feet in length between supports shall be not less than 4 inches by 6 inches in size. The greater dimension shall be vertical and should be increased in size when longer or when required for the load they are to support.

c. Intermediate Supports. Long needle beams shall be provided with intermediate supports or hangers.

d. Splicing Prohibited. Needle-beam scaffolds shall always be in one length. Spliced or built-up beams shall never be used.

e. Secured Against Displacement. Needle-beam scaffolds shall be secured against displacement. When one end is supported on the building structure, the overlap for support shall be not less than 6 inches.

f. Used for Rivet Heaters. When needle-beam scaffolds are used for rivet heaters, the platforms shall be the full permissible width of 6 feet and not less than 10 feet long, with planks laid close together and all edges provided with standard toe boards.

g. Specifications for Steel. Steel or wrought iron used for needle-beam scaffolds shall be free from rust or scale. When the scaffold span is not more than 12 feet, pipe beams should be at least 3-1/2 inches in diameter. When more than 12 feet and not more than 16 feet, the diameter should be 4 inches. The diameter should be correspondingly increased with an increase in the span.

h. Rope

(1) Size. Fiber rope 1 inch in diameter or greater shall be used.

(2) Method of Attaching. The ropes shall be attached to the needle beam by a scaffold hitch or a properly made eye-splice looped over the standing part of the rope. The loose ends of the ropes shall be tied to the rope by a bowline knot or a round turn and two half hitches.

(3) Arranging Hitch. The scaffold hitch shall be so arranged that the needle beam will be prevented from rolling or turning.

(4) Space from end of Beam. The rope shall be attached to the beam at a point not less than 1 foot from the end with provision being made to prevent its slipping over the end of the beam.

i. Platforms

(1) Dimensions. Platforms shall be not more than 6 feet wide. When the platform is suspended inside a building it shall be not less than 2 feet 6 inches wide, and when suspended outside a building it shall be not less than 3 feet wide.

(2) Thickness. When the span between needle beams is 12 feet or less, the platform planks shall be 2 inches thick by at least 10 inches wide and increased in thickness as the span increases.

(3) Length of Planks. Platform planks shall be at least 2 feet longer than the span between needle beams.

j. Beams Not of Equal Height. When needle-beam scaffolds are used where one beam is higher than the other, the planks shall be secured against slipping. A hole should be bored through each end of every plank, with a bolt slipped through the hole and provided with a tightly fitting nut. The bolt should be steel not less than 5/8 inch in diameter and not less than 8 inches long. The plank shall be laid with the bolts outside the supporting beams.

k. Platform Cleats. When platform planks are used in steeply inclined positions they shall be provided with cleats to prevent slipping thereon. Cleats shall be at least 1-1/2 inch by 2 inches, spaced not more than 8 inches apart and securely nailed to the plank.

l. Burning and Welding. Burning and welding, or the use of blow torch or any open flame shall not be permitted on or near needle-beam scaffolds unless suspension ropes are of steel. The use of fiber rope under these conditions is prohibited.

m. Chafing Pads. Chafing gear (pads) shall be placed on all sharp corners of beams where ropes or slings of steel or manila are used to suspend scaffolds.

16. Outrigger Scaffolds (Suspended Scaffolds)

a. Construction. Scaffolds shall be supported by thrustouts securely attached to the frame of the building. Each thrustout shall be equal in strength to a 6-inch I-beam at 12.25 pounds per foot or a 3 by 10 heavy timber set on edge, and shall not extend more than 6 feet from the building. The inner ends, extending into the building, shall be supported, braced, anchored, and securely fastened in place. (See Figure 10 for illustration.)

b. Guardrail. Heavy outrigger scaffolds shall be provided with standard guardrails supported on uprights and securely fastened to the thrustouts. These uprights shall be long enough to drop 12 inches below the outrigger and the lower end securely braced to it.

c. Toeboard. Standard toeboards and side screens shall be provided.

d. Horse Scaffolds Prohibited. Horse scaffolds shall not be erected upon the platform of an outrigger scaffold.

e. Wall as Support. Outriggers shall not be built into the wall and left with no other support.

f. Bracing. The projecting ends of outriggers shall be supported by external braces and struts when extra support is required. These shall not be depended upon as the main support.

g. Spacing. Thrustouts shall be spaced not to exceed 6 feet on centers.

h. Buckling. The thrustouts shall be rigidly held to prevent turning or buckling.

i. Construction of Platform. The platform shall be constructed of planks 2 by 10 inches securely nailed to the thrustouts and laid close together, except for a 1-inch space along the wall of the building.

j. Projection of Planks. The ends of all planks shall rest on the back of the thrustouts and shall project not more than 12 inches beyond.

k. Suspended Platforms. When working platforms are suspended from the thrustouts, they shall be supported by vertical hangers of not less than 2 by 6 inches and shall not be more than 10 feet long. They shall be securely nailed to the side of the thrustouts and extend at least 10 inches above the top of the thrustouts and to a block resting on the top edge of the thrustouts.

(1) Beams. The suspended platform shall be supported on 2- by 6-inch beams, nailed to the vertical hangers and rest on a block that shall be spiked to the side of the hangers below the beam.

(2) Planks. The suspended platform shall be formed of 2- by 10-inch planks, nailed close together across the back of the bearer and provided with a standard guardrail, toeboard, and side screen protection.

17. Horse Scaffolds (See Figure 5)

a. Rigid Construction. "Horses" used for scaffold purposes shall be rigid and of solid construction.

b. Dimensions

(1) Over-all size. A well-designed horse should have: a spread between the foot of the legs of about 24 inches, a taper in towards the top, a height of about 48 inches. The top horizontal members should be about 48 inches long.

(2) Materials. The following nominal size materials for a well-constructed horse 4 feet long are recommended:

Bearers ..... 3 in. x 4 in.
Legs..... 2 in. x 4 in.

564-350 O - 74 - 11

Longitudinal brace
between legs ..... 1 in. x 6 in.
Gusset brace at top of legs 1 in. x 8 in.
Half diagonal braces ..... 1 in. x 4 in.

(3) Bracing. If the horse is longer or higher than 4 feet, the cross section of the members should be increased and the horse rigidly braced.

c. **Extending Legs Prohibited.** The nailing of extension pieces on the legs of horses to increase the height is prohibited.

d. **Using Shim Pieces.** If horses are not the same height, shim pieces shall be used on back of the horses so that all planks will get a solid bearing.

e. **Spacing.** Horses shall not be spaced more than 4 feet apart for heavy-duty scaffolds nor more than 7 feet 6 inches for a light-duty scaffold.

f. **Height of Scaffold.** Horse scaffolds shall not be erected more than three tiers of horses nor more than 16 feet high.

g. **Placing in Tiers.** In erecting successive tiers of horses each horse shall be placed directly over the horse in the tier below.

h. **Building up with Bricks or Tile.** If a slight increase in the height of a platform is desired, low tiers of brick or tile may be built up on top of the scaffold planks to support the raised platform. This elevation shall be not more than 12 inches. Where this is done, the platform planks should be cleated from below.

i. **Foundation of Horses**

(1) Strong Flooring. Horses shall not stand directly on the back of beams or joists but shall stand on a strong temporary flooring of planks.

(2) Level Area. All horse scaffolds shall be set on a solid and level foundation, with the legs standing on sections of 2-inch planking and not directly on the earth.

j. **Nailed to Planks.** On scaffolds more than two tiers high the legs of the horses shall be nailed down to the planks to prevent displacement. The tiers of horses shall be braced together.

k. **Support of Planks.** Platform planks shall be supported on at least three horses, one at each end and one in the center. Under any circumstance, horses shall be close enough to eliminate spreading and excessive springing of the planks.

l. **Laying of Planks.** Planks shall be laid so that there is no danger from tipping.

m. **Use of Ladders.** When ladders are placed against horse scaffolds they shall be located near the horses, the planks against which they rest being firmly nailed down. The horses that support the planks shall also be nailed to the plank upon which they stand.

n. **Squares Used as Horses**

(1) Hinges. "Squares" hinged together to be used as horses shall be provided with a tie across the bottom to prevent spreading to a distance more than two-fifths the height of the square.

(2) Span. The distance between squares used as horses shall not exceed 12 feet.

o. **Toeboards.** When it is necessary for the protection of workmen below, a standard toeboard shall be provided on the outer edge and ends of the scaffold.

p. **Guardrails.** Where horse scaffolds are erected three tiers high, standard guardrails shall be provided on the top tier.

18. **Plasterers' Scaffolds**

a. **When Used.** Lathers', plasterers', and decorators' inside scaffolds shall be constructed in accordance with the requirements for pole scaffolds, article 0836.2. They shall be erected when work is to be done which cannot be reached safely from planks supported on ladders.

b. **Constructed with Trestle Ladders.** When a light-duty portable scaffold is formed of planks supported or hitched on trestle ladders, the base of the ladder shall be secured against opening up to the full spread before laying on the planks.

19. **Carpenters' Bracket Scaffolds** (See Figure 9)

a. **When Used.** When bracket scaffolds are used at heights exceeding 12 feet, standard guardrails shall be installed.

b. **Dimensions.** The brackets shall be built of material of not less than 2 by 3 inches, mortised together and bolted.

c. **Supporting Bolt.** The supporting bolt shall be not less than 5/8 of an inch in diameter. It should be welded to a flat iron member, not less than 2 feet long, which shall be spiked and set in flush with the top surface of the horizontal member. Length of bolt shall be sufficient to extend well inside the studs (when secured to a frame building) and shall be provided with washer and lever-handled nut.

d. **Length of Bolt.** There shall be at least 2 inches of threaded bolt beyond the nut when screwed up.

e. **Inspection.** The supporting bolt and nut shall be frequently inspected, and renewed when the threads show signs of wear.

f. **Construction.** In erecting a bracket, a 2 by 6 inch block shall be laid horizontally across the inside of two studs, with the bolt passing through the block and screwed up tight.

g. **Strength.** The brackets shall be of sufficient strength to carry a load of 400 pounds on the extreme outer ends.

h. **Spacing.** Brackets shall be spaced not more than 12 feet apart.

i. **Platform.** The platform shall be two planks wide, the plank ends overlapping the bracket not less than 6 inches nor more than 12 inches.

20. Crawling Boards or Chicken Ladders

a. **Single or Double.** Where crawling boards (or chicken ladders) are used on roof work, they may be either single or double.

b. **Catch Platform or Lifeline.** When crawling boards are used on a roof where the pitch is more than 3 inches in 1 foot, a catch platform or lifeline shall be provided.

c. **Dimensions.** A single crawling board shall be at least 10 inches wide and not less than 1 inch thick. Cleats as long as the width of the board, and at least 1-1/2 inches wide by 1 inch thick, shall be nailed to the board.

d. **Upper End Secured.** The board shall be laid on the roof so that its length extends from the ridgepole down to the eaves. The upper end shall be securely engaged to the ridge with hooks or fastened with a cleat.

e. **Double Boards.** Where double boards are used, each section shall be made similar to the single board. The two sections should be hinged or bolted together. They shall be laid so that the hinge bolt will rest on the peak or ridge pole.

21. Ladder Jacks (See Figure 9)

a. **Specifications**

(1) Types. Ladder jacks shall be of an approved type.

(2) Ladders. Ladders used with ladder jacks shall be designed and constructed in accordance with requirements in article 0835.

b. **Limitation of Use**

(1) Height. Ladder jacks shall not be used at a greater height than 22 feet above the ground or working level.

(2) Number of Persons. Only one person shall be allowed to work on a ladder-jack scaffold at any one time.

(3) Not to be Used With Extension Ladders. Ladder jacks shall not be used on extension ladders.

c. **Safety Feet.** Ladders used with ladder jacks shall be placed and secured to prevent slipping. In addition, ladders should be equipped with safety feet.

d. **Platforms**

(1) Overlap. Platform planks should overlap the bearing surface at least 4 inches but not more than 8 inches.

(2) Span. Platform planks shall not have a greater span than 10 feet unless provided with a center support.

(3) Clamping. The ladder jack shall be clamped or otherwise securely fastened to the platform and shall bear on the side rails.

22. Roofing Brackets

a. **Construction.** Roofing brackets shall be triangular in shape, formed of three pieces of 2- by 4-inch material. The diagonal member should be sloped to fit the pitch of the roof and the horizontal member leveled to support the plank.

b. **Supports.** Roof brackets shall be securely supported by means of ropes fastened at one end to a hook securely hooked over the ridge pole and, at the other

end, to a 5/8-inch eye bolt securely screwed into the roofing bracket; or by means of pointed projectors driven their full length in the frame or woodwork of the roof. The ropes may also be secured to chimney or roof members or other solid objects on the other side of the roof.

c. **Catch Platform.** When work is done on roofs which are more than 20 feet from the ground to the eaves, and when there is no parapet wall at the eaves, and such roof has a slope greater than 3 inches in 1 foot, a substantial catch platform should be provided. Catch platforms should be of sufficient width to extend at least 2 feet beyond the outer edge of the eaves. In addition, the platform should be equipped with a standard guardrail.

d. **Lifeline.** As an alternative to such a platform, each man working on the roof should be provided with a lifeline securely fastened to a fixed anchorage.

23. **Window Jack Scaffolds** (See Figure 9)

a. **When Used.** Window jack scaffolds shall be used only for the purpose of working at the window opening, through which the jack is placed.

b. **Only One Person Permitted.** One person only is permitted on the scaffold at any one time.

c. **Working Load.** Window jacks shall be constructed to sustain a working load of at least 200 pounds with a safety factor of four.

d. **Anchoring to Structure.** Window jacks shall be securely anchored to the structure.

e. **Use of Window Jacks.** Window jacks shall not be used as the supporting element of scaffolds.

f. **Planks Between Window Jacks.** The placing of planks between window jacks is prohibited.

The following illustrations appear through the courtesy of the Chief of Engineers, United States Army.

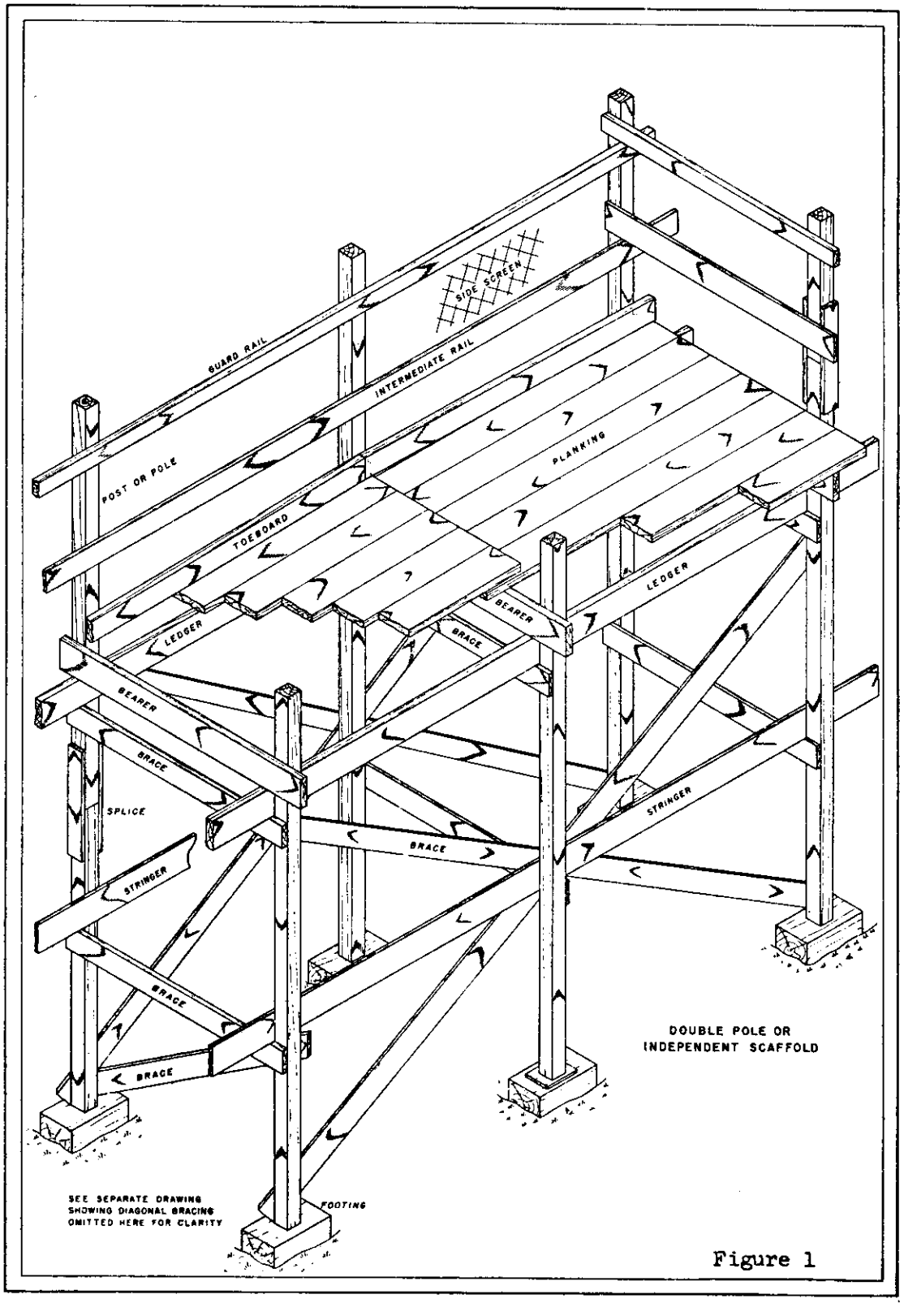
GUARD RAIL
INTERMEDIATE RAIL
SIDE SCREEN
POST OR POLE
PLANKING
TOEBOARD
LEDGER
BEARER
BRACE
LEDGER
BEARER
BRACE
SPLICE
STRINGER
BRACE
STRINGER
BRACE
BRACE
DOUBLE POLE OR
INDEPENDENT SCAFFOLD
SEE SEPARATE DRAWING
SHOWING DIAGONAL BRACING
OMITTED HERE FOR CLARITY
FOOTING

Figure 1

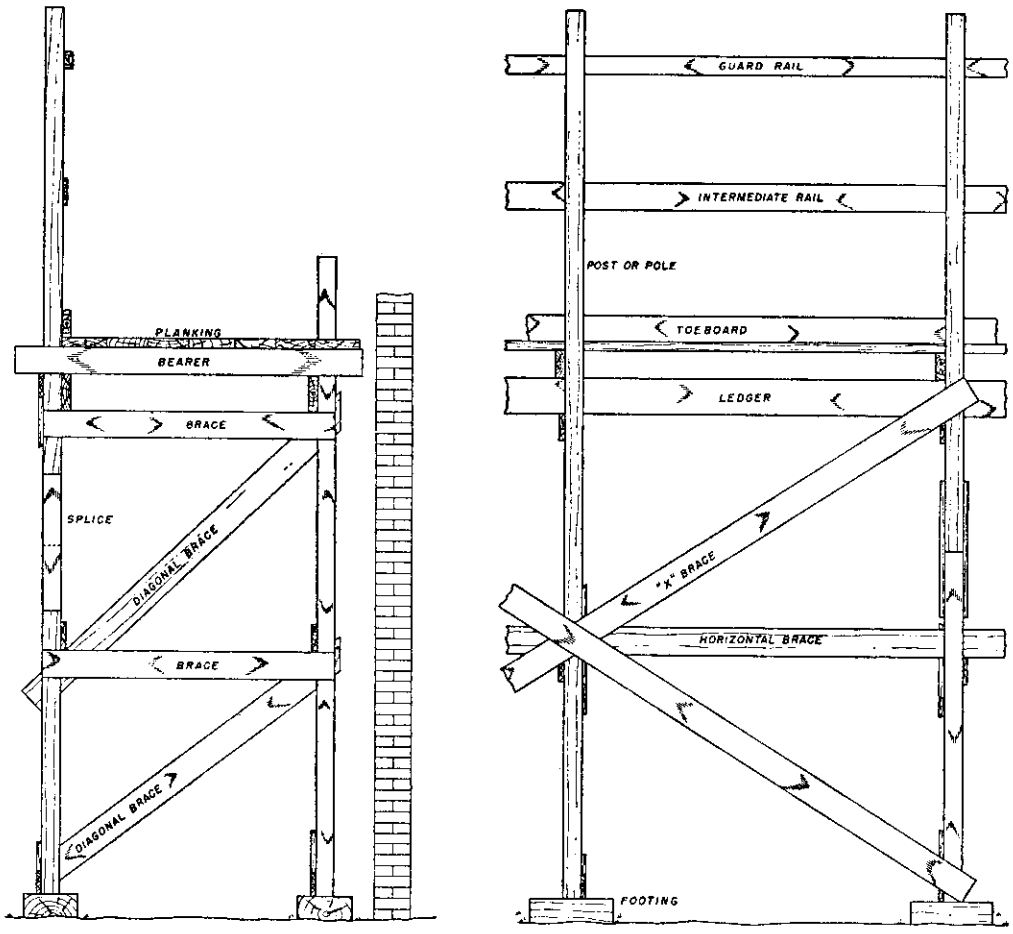

END VIEW

BACK VIEW

DOUBLE POLE OR
INDEPENDENT SCAFFOLD

Figure 2

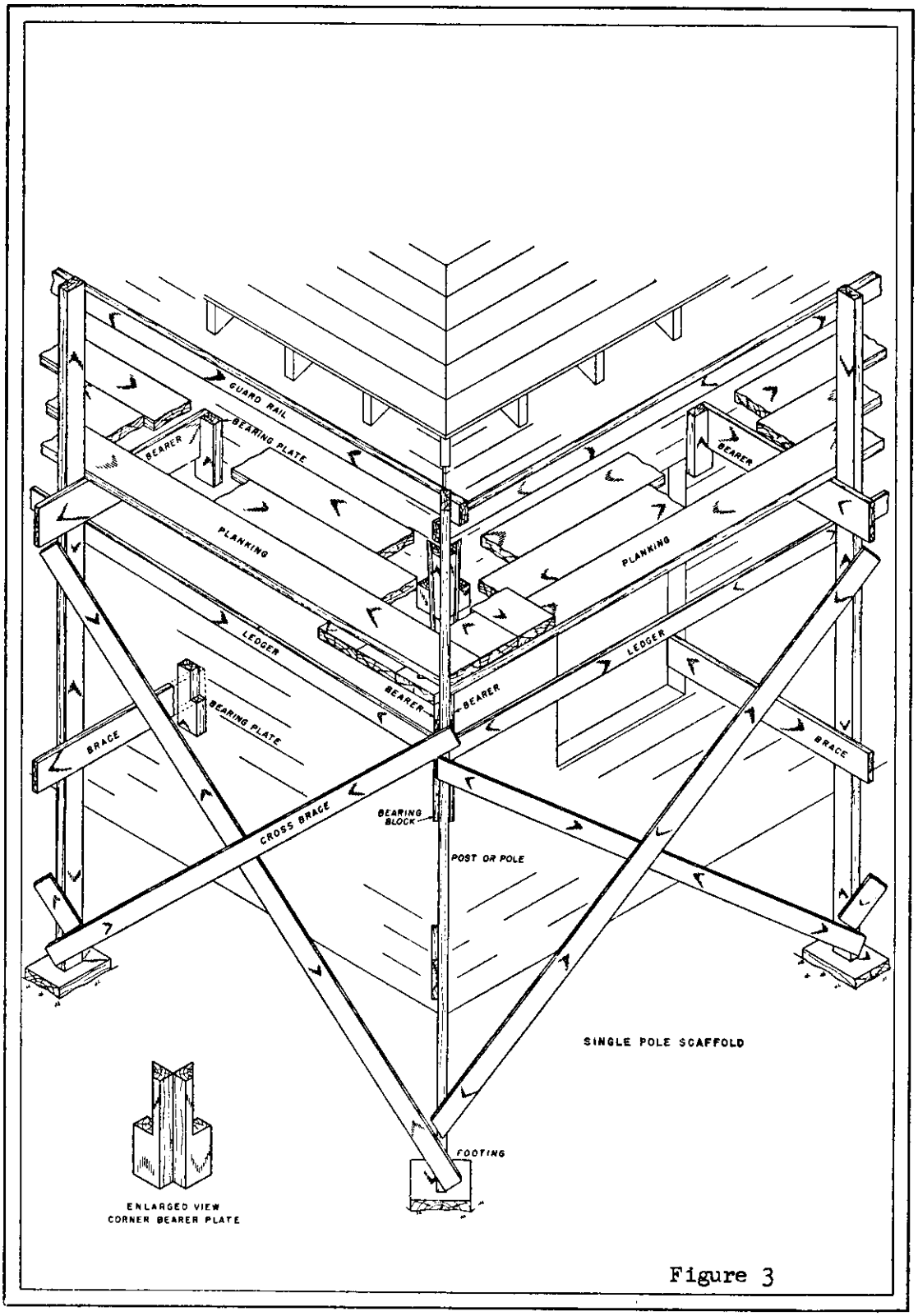
GUARD RAIL
BEARING PLATE
BEARER
BEARER
PLANKING
PLANKING
LEDGER
LEDGER
BEARER
BEARER
BEARING PLATE
BRACE
BRACE
CROSS BRACE
BEARING BLOCK
POST OR POLE
SINGLE POLE SCAFFOLD
FOOTING
ENLARGED VIEW
CORNER BEARER PLATE

Figure 3

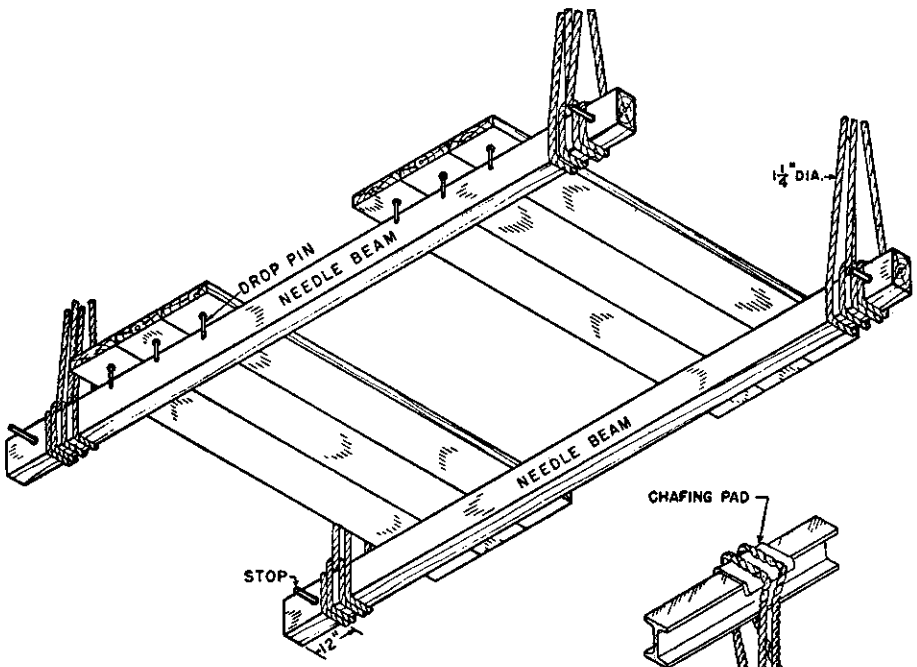

NEEDLE BEAM SCAFFOLD

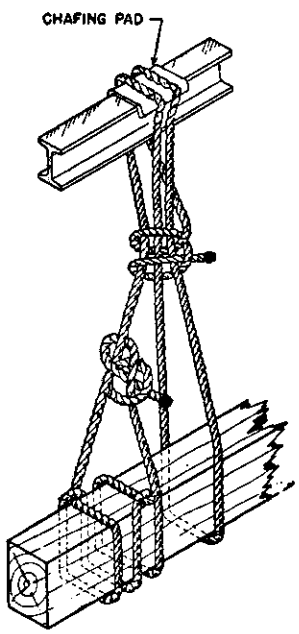

ENLARGED VIEW
SCAFFOLD HITCH
AND FASTENING

Figure 4

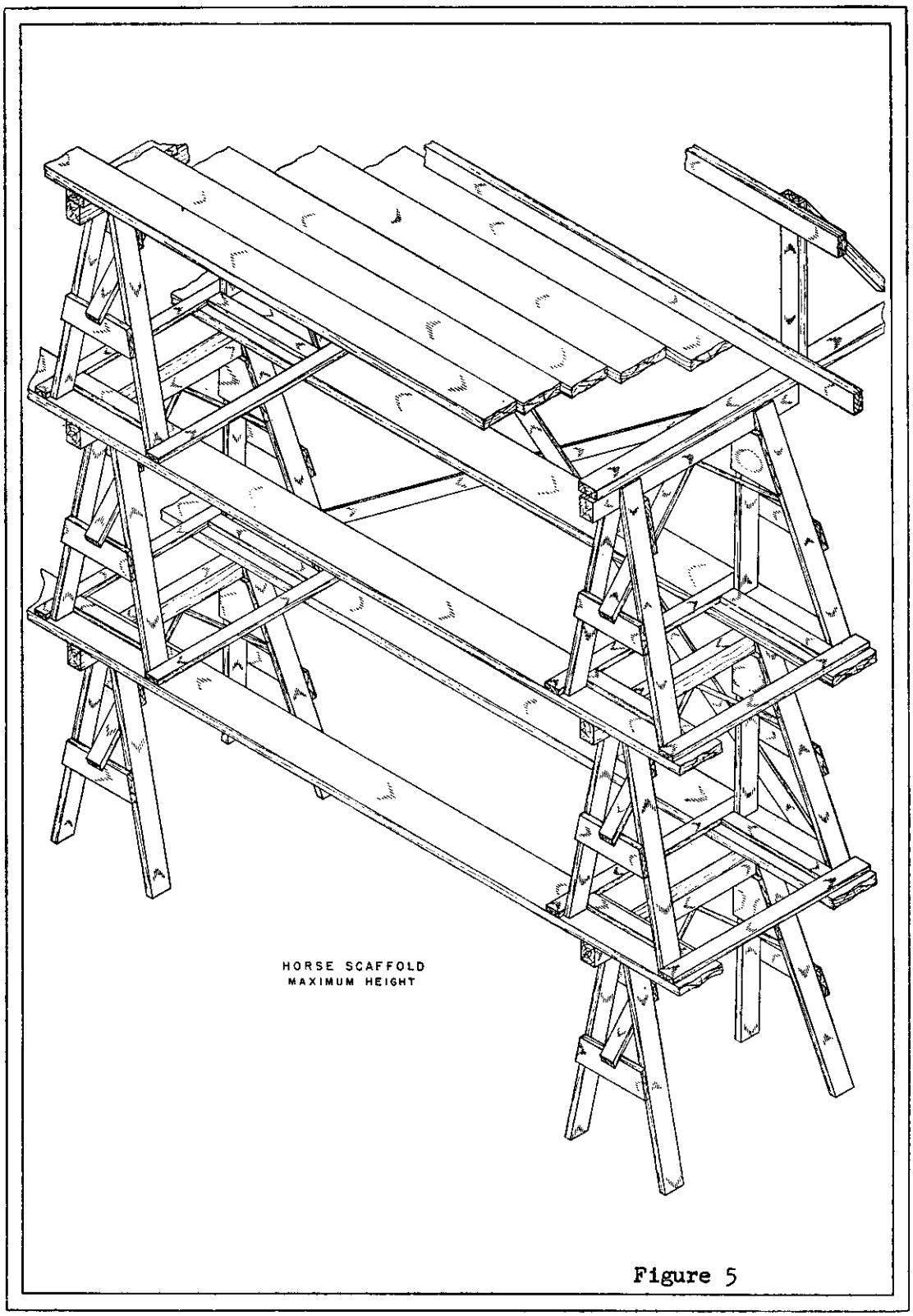

Figure 5

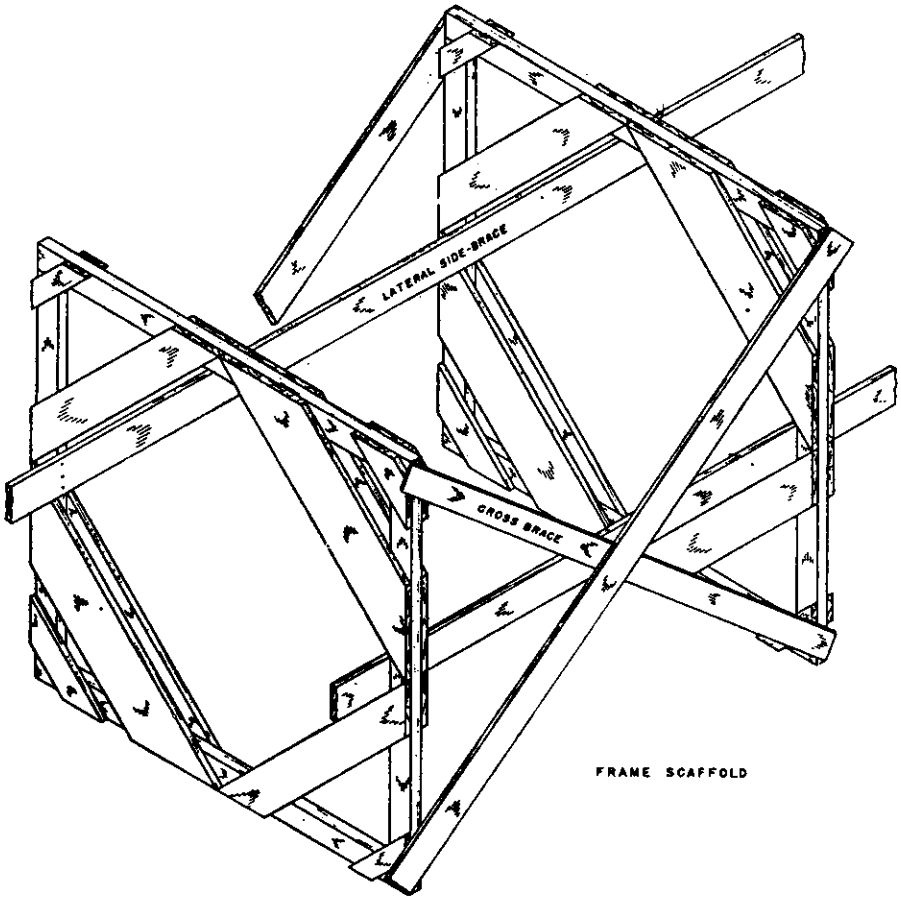

Figure 6

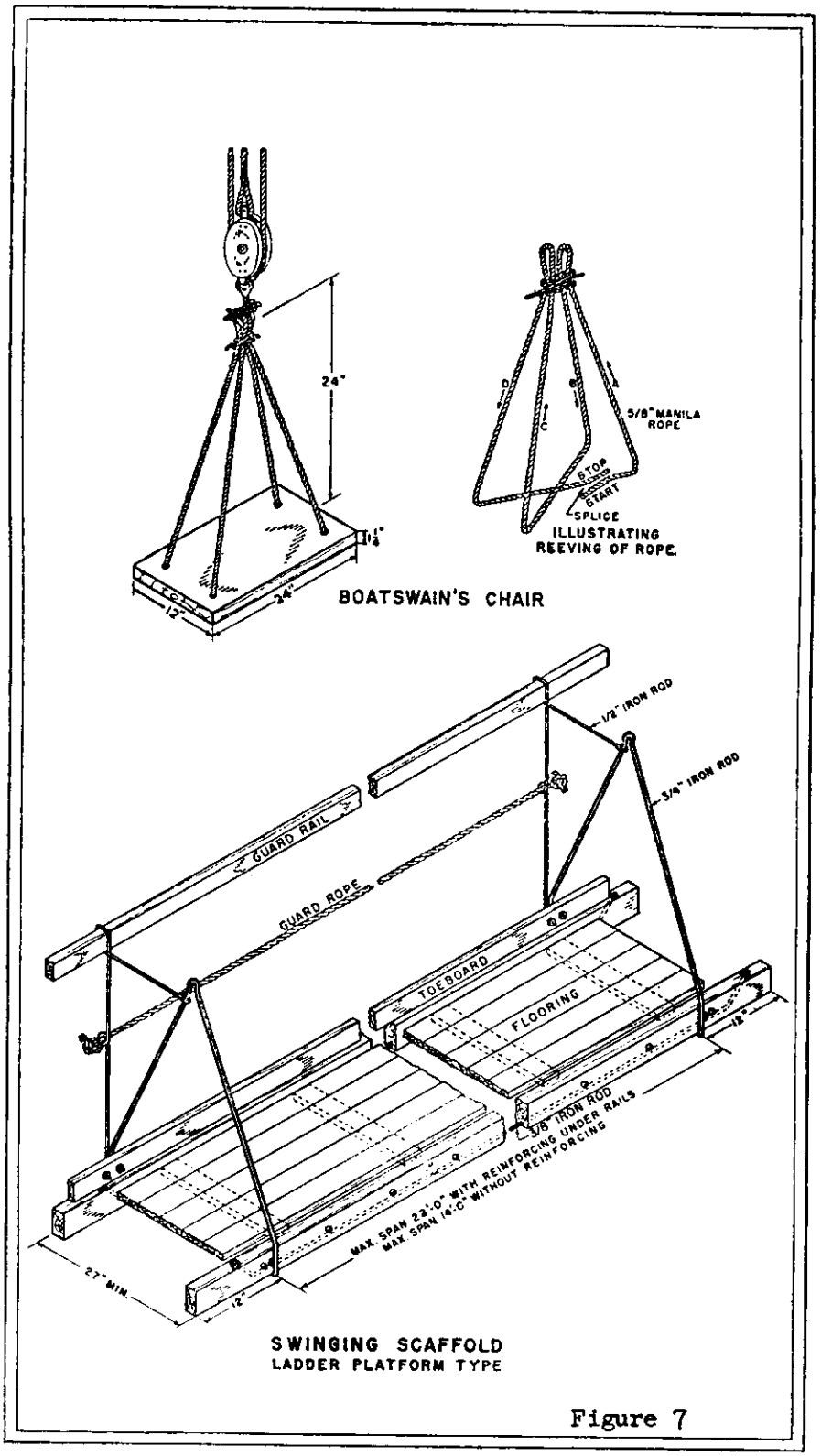
24"
1¼"
24"
12"
5/8" MANILA ROPE
STOP
START
SPLICE
ILLUSTRATING REEVING OF ROPE
BOATSWAIN'S CHAIR
1/2" IRON ROD
5/4" IRON ROD
GUARD RAIL
GUARD ROPE
TOEBOARD
FLOORING
12"
5/8" IRON ROD
MAX SPAN 22'-0" WITH REINFORCING UNDER RAILS
MAX SPAN 14'-0" WITHOUT REINFORCING
27" MIN.
12"
SWINGING SCAFFOLD
LADDER PLATFORM TYPE

Figure 7

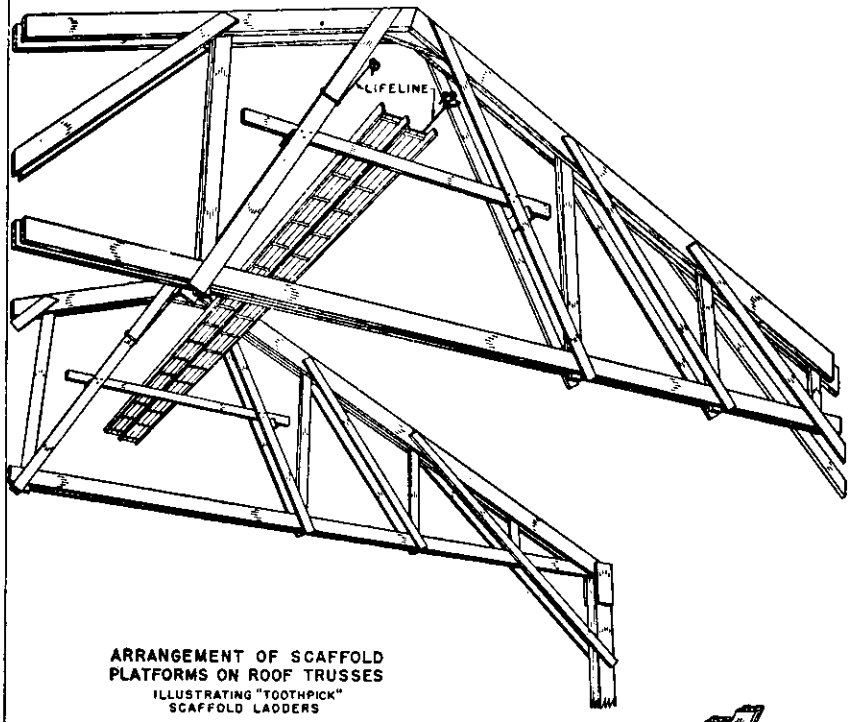

ARRANGEMENT OF SCAFFOLD PLATFORMS ON ROOF TRUSSES
ILLUSTRATING "TOOTHPICK" SCAFFOLD LADDERS

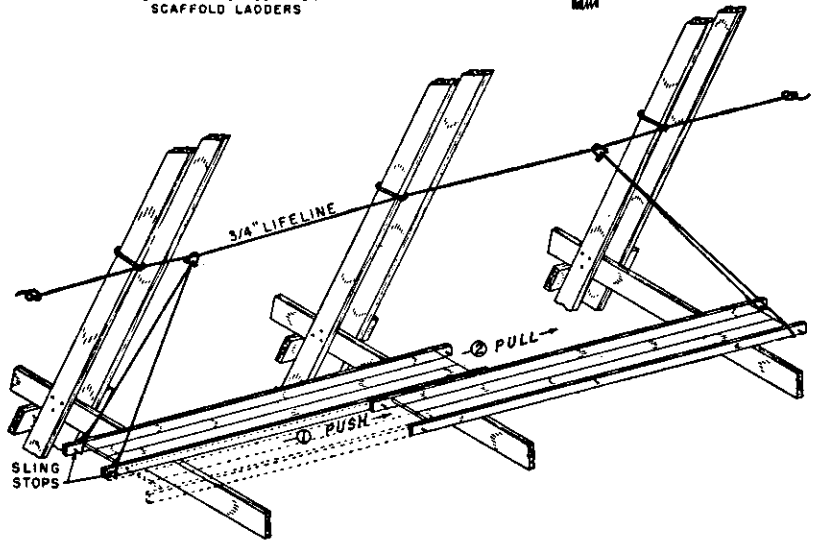

ILLUSTRATING USE OF LIFELINE FOR MOVING SCAFFOLD PLATFORMS

Figure 8

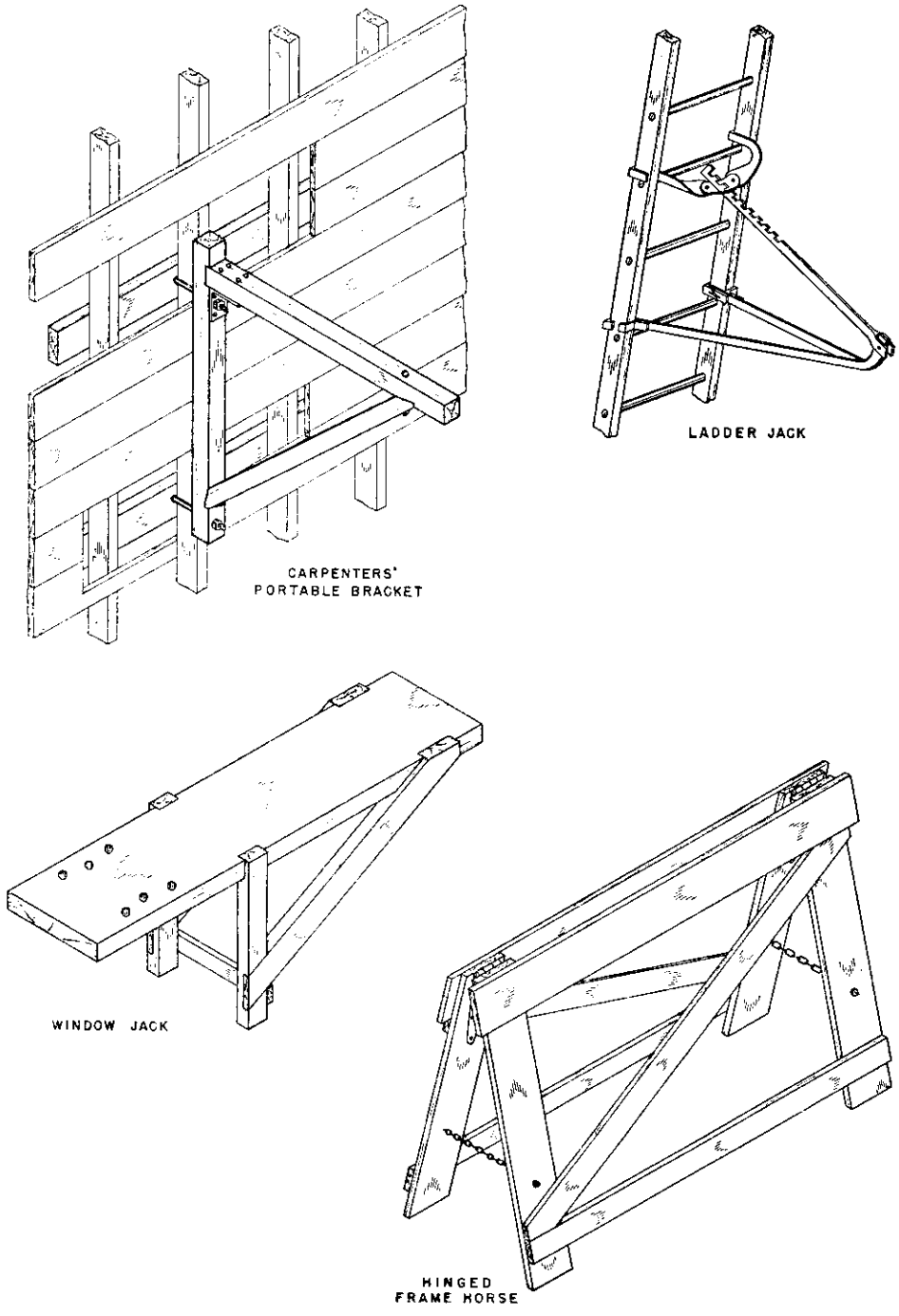
CARPENTERS'
PORTABLE BRACKET
LADDER JACK
WINDOW JACK
HINGED
FRAME HORSE

Figure 9

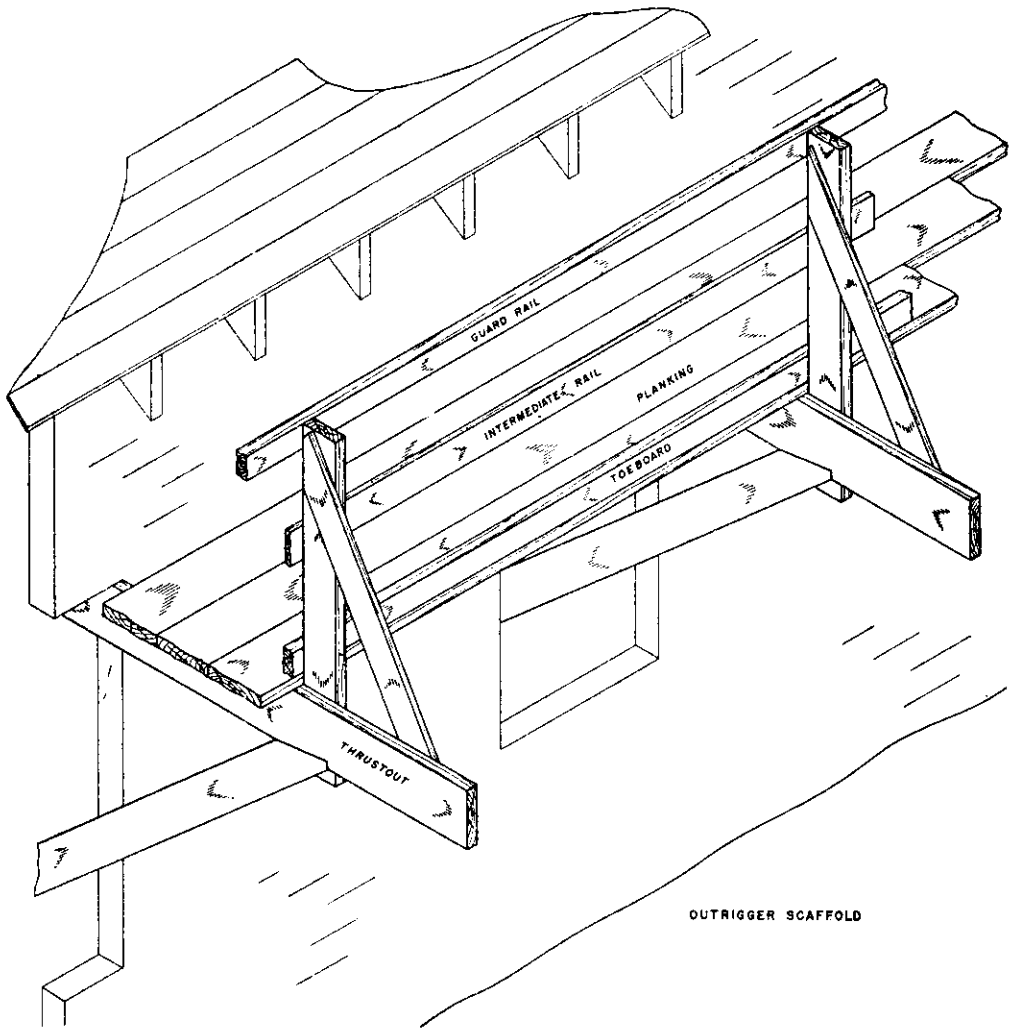
GUARD RAIL
INTERMEDIATE RAIL
PLANKING
TOEBOARD
THRUSTOUT
OUTRIGGER SCAFFOLD

Figure 10

DEMOLITION

0840. GENERAL

1. **Regulations and Codes.** Where applicable, federal, state, and local codes, rules, regulations, and ordinances governing any and all phases of demolition work shall be observed at all times. The safety precautions herein stated apply wherever demolition by the "piece-by-piece" method is undertaken.

2. **Overloading.** No structure, or part of a structure, of any floor or temporary support, or scaffold, sidewalk, shed, or bridge, or any device or piece of equipment shall be loaded in excess of its safe carrying capacity.

3. **Walkways.** Walkways and passageways shall be provided for the use of the workmen, who shall be instructed in their use. All such walkways and passageways shall be kept adequately lighted and free from debris and other materials.

4. **Protruding Nails.** Protruding nails in any kind of lumber shall be withdrawn, hammered in, or bent over as soon as such lumber is removed from the structure being demolished; or all nail-bearing lumber shall be placed in piles for future cleaning or burning.

5. **Dust.** During the demolition operation, the work shall be sprinkled regularly to keep the dust to a minimum.

6. **Protective Apparel.** Gloves should be worn. All workmen exposed to the danger of falling objects shall wear hard hats.

7. **Goggles.** Approved type safety goggles shall be worn to protect the eyes against injury from flying pieces and from dirt and dust blown by the wind. Workers using jack hammers shall wear safety goggles.

8. **Respirators.** If the operations are dusty, demolition workers shall also wear approved respirators.

9. **Protective Equipment.** Only Navy approved personal protective equipment as described and illustrated in the *Safety Equipment Manual,* NAVEXOS P-422, is authorized.

0841. WARNING SIGNS AND LIGHTS

1. **Dangerous Areas.** On every demolition job, *danger* signs shall be conspicuously posted around the property; all doorways or thoroughfares giving access to the property shall be kept barricaded except during the actual passage of men or equipment.

2. **Barricades.** Exterior wall openings which extend down to floor level shall be barricaded to a height not less than 3 feet above floor level when the debris requires such action.

3. **Guard Rails.** Floor openings and shafts not used for material chutes or workers' entrances shall be floored over or enclosed with guardrails and toeboards.

4. **Flares.** During the hours of darkness, red lights, flares, reflectors, or fluorescent warning devices shall be placed on or about all barricades.

5. **Watchmen.** When operations are not in progress, a watchman or watchmen shall be stationed to prevent the public from entering the danger zone and to maintain all danger signs, lights, and barricades.

0842. PREPARATION OF LOCATION

1. **Electric Power.** The power on all electric service lines shall be shut off and all such lines shall be cut or disconnected at or outside the limits of the site before demolition work is started. Prior to the cutting of such lines, the approval or cooperation of the local electric service company shall be obtained.

2. **Gas Service.** Before starting demolition work, gas service shall be cut off and gas lines capped, with the approval or cooperation of the local gas service company.

3. **Protection of Power Lines.** If it is necessary to maintain power, water, steam,

or other lines during demolition, such lines shall be temporarily relocated or protected with substantial covering to the satisfaction of the local utility companies and in accordance with codes and legal requirements.

4. **Glass.** Glazed sash and glazed doors and other glass fixtures shall be removed before other demolition work is started.

5. **Shoring.** If a structure to be demolished is considered to be insecure, the walls shall be shored or braced in accordance with the requirements of the authorities having jurisdiction, or in the absence of such requirements, in accordance with accepted engineering practice, before any demolition work is started.

0843. SIDEWALK SHEDS

1. **Public Thoroughfares.** Before any demolition work is commenced, every sidewalk or public thoroughfare adjacent to the work site shall either be closed or protected as specified elsewhere in this section. Such thoroughfares which are open to the public shall be kept clear and unobstructed at all times.

2. **When Required.** If a structure to be demolished is more than 2 stories or 25 feet high, measured from sidewalk or (if there is no sidewalk) from the street level, and if the horizontal distance from the inside of the sidewalk to the structure is 15 feet or less, a substantial sidewalk shed shall be constructed over the entire length of the sidewalk adjacent to the structure, of sufficient width to accommodate pedestrian traffic without causing congestion.

3. **Lighting.** Sidewalk sheds shall be lighted either by natural or artificial means sufficient to ensure safety at all times.

4. **Load Capacity.** Every sidewalk shed shall be capable of safely sustaining a minimum load of 150 pounds per square foot, and if material is to be stored thereon, the shed shall be capable of sustaining the load to be imposed.

5. **Fencing.** Unless the top deck of the sidewalk shed is built solidly against the face of the structure to be demolished, the vertical face of the shed supports next to the building shall be solidly fenced throughout. This shall not prohibit the construction and use of such solid sliding or swinging gates as may be necessary for the prosecution of the work.

6. **Enclosing Roof.** The outside edge and ends of the roof of the shed shall be provided with a substantial enclosure of at least 42 inches above the shed. Such enclosures may be vertical or inclined outward at approximately 45 degrees and shall consist of boards laid close together secured to braced uprights, or toeboards and galvanized wire netting formed of not less than No. 16 U.S. gage wire and one and one-half inch mesh.

7. **Loading Passages.** Sidewalk shed openings for loading purposes shall be kept closed at all times except during actual loading operations.

8. **Specifications for Shed Roof.** The roof of a sidewalk shed shall consist of planking not less than 2 inches in thickness, closely laid, and shall be made watertight through the use of tar paper roofing or similar material. All members of the shed shall be adequately braced and connected to resist displacement of members or distortion of the framework.

9. **Fences.** When the horizontal distance from the inside of the sidewalk to the structure is more than 15 feet but less than 25 feet, a substantial fence may be constructed along the inside of the walk in lieu of a sidewalk shed. If permission has been granted to close the sidewalk, the fence may be constructed along the inside edge of the roadway. The fence shall be at least 6 feet high, of wood or other suitable material, and shall be built solid for its entire height and length except that openings necessary for the proper prosecution of the work may be provided with solid sliding or swinging gates.

10. **Railings.** When the horizontal distance from the inside of the sidewalk to the structure is more than 25 feet, it is permissible to construct a substantial railing in lieu of a

fence on the inside of the walk or roadway, with the necessary access gates. If permission has been granted to close the sidewalk, the railing may be constructed along the inside edge of the roadway.

11. **Canopies.** Where workers' entrances to buildings being demolished are not completely protected by sidewalk sheds, all such entrances shall be protected by canopies extending from the face of the building to a point not less than 8 feet from it. In each case such overhead protection shall be at least 2 feet wider than the building entrance or opening and every canopy shall be at least as strong as the sidewalk shed described in paragraph 8 of this article.

0844. REMOVAL OF MATERIALS

1. **Gloves.** Workmen removing materials shall wear leather gloves.

2. **Dropping Material.** No material shall be dropped to any point lying outside the exterior walls of the building except through enclosed wooden or metal chutes.

3. **Enclosing Chutes.** All material chutes which are at an angle of more than 45 degrees from the horizontal shall be entirely enclosed on all four sides except for openings at or above floor level for the receiving of materials.

4. **Specifications for Chutes.** Openings as specified in paragraph 3 above, shall not exceed 48 inches in height measured along the wall of the chute, and in all stories below the top floor such openings shall be kept closed when not in use.

5. **Angle of Chute.** Chutes at an angle of less than 45 degrees with the horizontal may be left open on the upper side, provided that at the point where such a chute discharges into a chute steeper than 45 degrees with the horizontal, the upper side of the steeper chute is boarded over to prevent the escape of material.

6. **Gate at Chute.** A strong gate shall be installed in each chute at or near the discharge end and a reliable employee shall be designated to control the gate and the backing up and loading of trucks.

7. **Protection of Passersby.** A designated employee shall be instructed to prevent any person from standing or passing under the discharge end of the chute.

8. **Guarding Chute**

a. **Bottom.** When operations are not in progress, the danger area at the discharge end of each chute shall be completely enclosed with a substantial fence, or otherwise made inaccessible.

b. **Top.** Chute openings into which workmen dump debris shall be guarded by a substantial guardrail extending at least 36 inches above the level of the floor or other surface on which men stand to dump material into chutes.

0845. STAIRS, PASSAGEWAYS, AND LADDERS

1. **Access to Building.** With the exception of stairways, passageways, and ladders for the use of workmen, access to the building being demolished shall be entirely closed off at all times.

2. **Securing Ladders.** All ladders shall be secured against slipping out at the bottom, and against movement of any kind at the top.

3. **Safe Condition.** All stairs, passageways, and ladders used by workmen shall be maintained in a safe condition. (See article 0835 for special precautions concerning the specifications for and use of ladders.)

0846. REMOVAL OF WALLS

1. **Order of Demolition.** Except for the cutting of holes in floors for chutes and holes through which to drop materials, the preparation of storage space, and other necessary preparatory work, demolition of exterior walls and floor construction shall begin at the top of the structure and proceed downward, and each story of exterior wall and floor construction shall be removed and dropped into the storage space before commencing the removal of walls and floors in the story next below. This requirement shall not prohibit the demolition of a structure in vertical sections so long as positive means are taken to prevent injury to persons or damage to property.

564-350 O - 74 - 12

2. **Overloading Floors.** Masonry walls or other sections of masonry shall not be permitted to fall upon the floors of the building in masses that exceed the safe carrying capacity of the floors.

3. **Lateral Bracing.** No section of wall whose height is more than 22 times its thickness shall be permitted to stand without lateral bracing unless such wall is in good condition and was originally designed to stand to a greater height without such lateral support.

4. **Hazardous Weather.** Workmen shall not be permitted to work on top of a wall when weather conditions constitute a hazard.

5. **Load-Supporting Members.** Structural or load-supporting members on any floor shall not be cut or removed until all stories above that floor have been demolished and removed. This provision shall not prohibit the cutting of floor beams for the purpose of removal of materials, as stated in article 0844, or for the installation of equipment; nor shall it prohibit the removal of intermediate steel floor beams not required for the stability of the structure.

6. **Openings in Floor.** Before demolishing any interior or exterior wall which is within 10 feet of any opening in the floor immediately below, such opening shall be substantially planked over unless all workmen are removed from all floors below and access to such floors is positively prevented.

7. **Steel Framing.** In buildings of "skeleton" construction, the steel framing may be left in place during the demolition of masonry work. Where this is done, steel beams, girders, and the like shall be cleared of all loose material as the masonry work progresses downward.

8. **Walkways.** Walkways shall be provided to enable workmen to reach or leave their work on any scaffold or wall. Such walkways shall be not less than 30 inches wide.

9. **Stability of Remaining Walls.** At the completion of each day's work, all walls shall be left stable and in no danger of being overturned.

0847. CATCH PLATFORMS

1. **Where Used.** During the demolition of the exterior walls of a structure originally more than 70 feet high, catch platforms shall be erected along the exterior faces of such walls where necessary to prevent injury to the public and to men working below.

2. **Three-Story Limit.** Such catch platforms shall be constructed and maintained not more than three stories below the story from which the exterior walls are being removed. When the demolition has progressed to within three stories of ground level, catch platforms will not be considered necessary.

3. **Limitation of Use.** Materials shall not be dumped on catch platforms nor shall such platforms be used for the storage of materials.

0848. REMOVAL OF FLOORS

1. **Definition.** In the following paragraphs the term "floor arches" shall apply to the masonry filling between the floor beams and girders irrespective of the type of floor system.

2. **Width of Section.** In cutting holes in floor arches which span in one direction between two beams or supports, the section of floor arch to be removed in making such hole may be of any width and shall include the entire span of the floor arch which is between the two beams or supports on which it bears.

3. **Supporting Planks.** When workmen are engaged in removing floors, planks of ample strength (not less than 2 inches thick by 10 inches wide) shall be provided and used by workmen breaking down floor arches. The planks shall be so placed as to give the workmen firm support should the arch collapse unexpectedly. If it is necessary for a workman to straddle a space between two planks, such space shall not exceed 16 inches.

4. **Walkways.** Walkways not less than 30 inches wide formed of planks of ample

strength (not less than 2 inches thick by 10 inches wide) shall be provided and used by the workmen when necessary to enable them to reach any work place without walking on exposed beams.

5. **Stringers.** Stringers of ample strength shall be installed to support the planks where necessary and the ends of such stringers shall be supported by floor beams or girders and not by floor arches alone.

6. **Barricades.** When floor arches are being removed, no workmen shall work in the area directly underneath and such area shall be barricaded to prevent access to it.

7. **Clearing Floor Area.** The demolition of floor arches shall not be started until they and the surrounding floor area for a distance of 20 feet have been entirely cleared of debris and other unnecessary material.

0849. DEMOLITION OF STEEL CONSTRUCTION

1. **Planking Derrick-Supporting Beams.** When floor arches have been removed, the entire tier of beams on which any derrick is supported shall be completely planked over except for such openings as are required for handling material or equipment.

2. **Signal System.** In the operation of cranes and derricks, a standard signal system shall be used and all men assigned to the operation of such equipment shall be fully instructed in the proper use of these signals.

3. **Tag Lines.** A tag line or guide rope should be used on all hoisted or lowered loads.

4. **Riding Load.** The riding of the load line in any lifting device is prohibited.

5. **Protection of Eyes.** Where it is necessary to do any burning with acetylene, welders' goggles of approved type (article 1011) shall be worn by the workmen so engaged.

6. **Lifting Acetylene or Oxygen Tanks.** Whenever acetylene or oxygen cylinders are transported or lifted by crane or derrick, such cylinders shall be placed in substantial stands or cradles in an upright position.

7. **Swinging Beams.** No beam shall be cut until precautions have been taken to prevent it from swinging freely and possibly striking any worker or any piece of equipment or any part of the structure being demolished.

8. **Lowering Steel.** All structural steel shall be lowered from the building; it shall never be allowed to drop.

BLASTING

0855. GENERAL

1. **Trained Personnel.** The handling, storage, and use of explosives shall be directed by persons of proved experience and ability in blasting operations, and shall conform with Bureau of Naval Weapons and station regulations and with the requirements of state and municipal authorities having jurisdiction. Precautions for transportation of explosives will be found in article 0517. Rough handling, careless stowage, and similar improper treatment of explosives can lead to serious explosions and accidents. Supervisory personnel engaged in or responsible for blasting operations should be familiar with the practices described in *The Blaster's Handbook,* published by E. I. DuPont De Nemours and Co., Inc.

2. **Permission to Use Explosives.** Permission shall be obtained from the Government representative, commanding officer, or his representative-in-charge before explosives are brought on the job or station premises. (See Army Corps of Engineer's Manual EM-385-1-1.)

3. **Review of Plans.** Plans for use of explosives shall be reviewed by the Government representative in consultation with the safety staff of the activity prior to granting permission to use explosives for blasting purposes.

4. **Use of Intoxicants.** No person addicted to the use of, or under the influence of intoxicants or narcotics shall transport, handle, stow, or otherwise use explosives.

5. **Smoking.** Personnel actively engaged in the transportation, handling, stowage, or use of explosives shall not smoke or carry matches, cigarette lighters, or other flame-producing devices on their person or in a vehicle containing explosives.

6. **Personnel Kept to a Minimum.** The number of personnel engaged in handling explosives and the number present in the vicinity of the place where explosives are in use shall always be kept to a minimum.

0856. STOWAGE AND HANDLING OF EXPLOSIVES

1. Magazines

a. **Construction and Location.** Explosives, detonators, and fuzes shall be stowed in bullet-proof, fire-resistant, and weather-proof magazines constructed in accordance with standard designs established by the Bureau of Yards and Docks. The allowable locations of these magazines with relation to other magazines and buildings shall be in accordance with the current quantity-distance tables supplied by the Bureau of Naval Weapons.

b. **Surrounding Area.** The ground around the magazine shall be kept free of brush and dry leaves. A fence, preferably of barbed wire, should be maintained around the magazine area.

c. **Use for Other Purpose.** Magazines in which explosives are stowed shall not be used for any other purpose. Miscellaneous material shall not be stowed in these magazines.

2. **Shoes with Nails.** Shoes with nails or metal plates that would cause friction sparks shall not be worn in a magazine or around explosives.

3. **Order of Use.** Stowed explosives shall be used in the order of their delivery.

4. **Angle of Stowage.** Boxes of explosives should be stowed so that the cartridges will lie flat and not stand on end.

5. **Dynamite**

a. **Use Prohibited When Frozen.** No attempt shall be made to use dynamite that is frozen.

b. **Blasting Caps.** Under no circumstances shall blasting caps be taken into magazines containing dynamite, either for stowage or for use in making up primers.

c. **Detonators.** Detonators shall never be stowed in the same magazine with other explosives such as powder or dynamite.

6. **Cartridges Discolored.** Any cartridges showing nitroglycerine, crystal, or stains on the outside shall not be used.

7. **Temperature and Humidity.** Buildings in which fuze is stowed should be dry; the temperature should be kept between 45 degrees F and 100 degrees F. Stowing fuze in a damp place retards its burning speed, and fuze that is stowed underground is never in prime condition.

0857. DRILLING

1. **Size of Hole.** All drill holes shall be of sufficient diameter throughout their length to permit free insertion of a cartridge without the necessity of undue ramming or of removing the original wrapper from the dynamite.

2. **Preparation.** The holes shall be made ready before the dynamite is brought to the work and the operations of priming, charging, tamping, and firing carried on with a minimum of man exposure and as rapidly as is consistent with careful work.

3. **Deepening Hole.** Holes that have previously contained explosives shall not be deepened.

4. **Inspection of Old Holes.** Drilling shall not be started until all remaining butts of old holes are examined for unexploded charges.

5. **Unexploded Charges.** Drilling shall not be resumed after blasts have been fired until a thorough examination has been made to make sure that no charges remain unexploded.

0858. PORTABLE AIR COMPRESSORS

1. **Hose Connections.** The hose connections of portable air compressors must be kept tight. These connections shall be inspected frequently to be sure that they stay tight in service.

2. **Safety Valves and Gages.** The safety valves and gages shall be checked frequently so that there will be no doubt that they are in good operating condition.

3. **Towing Equipment.** Fixed tow bars shall always be used when transporting this equipment. Chains and ropes shall not be employed when moving it from place to place. This equipment shall not be towed at a speed beyond that for which the wheel bearings are designed.

4. **Carriage Wheels.** The wheels of portable air compressor carriages shall be checked regularly to be sure they will operate safely when they are used.

5. **Air Receivers and Compressors.** All the usual safety aspects of motors, air compressors, and air receivers must be considered to assure safe operation of this type of equipment. (See articles 0735-0737.)

0859. LOADING CHARGES

1. **Tamping.** In loading small diameter bore holes, tamping shall be done with a wooden stick having no metal parts, and pressure shall be exerted only when necessary. Quick sharp blows shall never be used.

2. **Locating Charges.** All holes or charges shall be checked and definitely located before firing.

3. **Springing Charges.** Electric detonators should be used for springing charges. The use of short pieces of fuse may result in the charge exploding before the blaster is a safe distance away from the hole. When holes are sprung, leave ample time between springing shots for the hole to cool, and also between the last springing shot and the loading of the main charge.

4. **Loading Near Drilling Prohibited.** Provision shall be made to segregate drilling from loading operations.

0860. PREPARATION FOR FIRING

1. **Selection of Fuse.** A fuse shall be selected which conforms to the condition existing on the operation. Where wet drilling is being done, a tape-covered fuse shall be used, the grade depending upon conditions of temperature and moisture. Where acid is present in sufficient quantity to make it necessary to line pumps with acid-resisting materials, a triple-tape fuse should be used, the kind depending upon conditions of temperature and moisture.

2. **Burning Rate.** The burning rate of a fuse shall be determined prior to its use. This may be done by timing the burning rate of a sample length of fuse (6 feet).

3. **Crimping Tool.** Caps shall be fastened to fuses by means of crimping tool made especially for that purpose. The use of the teeth or a knife or pliers is prohibited.

4. **Vertical Shafts.** No blast shall be fired with fuse in vertical or steep shafts.

5. **Number of Charges.** When 10 or more explosive charges are to be loaded and shot at one time, they shall be fired electrically; fewer than 10 explosive charges to be loaded and shot may be fired by cap and fuse.

6. **Blasting Mattress.** Before a charge is fired, the rock or other substance to be shattered shall be covered with a blasting mattress or other means, if necessary, to protect workmen, the public, or property from injury or damage from flying rocks.

7. **Warning.** When a shot is about to be fired, all persons near the place shall receive ample warning and the fuse shall not be lighted or the blast detonated until it is absolutely certain that every person has re-

treated to a safe distance (not less than 500 feet). The blaster in charge is responsible for posting signalmen and guards to keep vehicles and persons out of the vicinity just prior to the blast.

8. **Shelter.** Definite places of shelter, if available, shall be assigned to various crews of workmen, and supervisors shall be responsible for seeing that men go to designated shelter.

0861. BLASTING MACHINES

1. **Care of Blasting Machine.** Care must be taken to make sure that the blasting machine is in good working order and of sufficient capacity to fire all shots in the series. The machine should be kept dry; it should not be left outside or underground in a shaft or tunnel overnight.

2. **Testing.** A blasting machine shall be tested daily when in use and kept in good mechanical condition.

3. **Preliminary Trial.** The blasting machine should always be tested with a rheostat before operation. It should be operated a few times before making connections; that procedure will make it possible to generate more current.

4. **Connecting Leads.** No leads shall be connected to a blasting machine until just before the shot is to be fired and all exposed persons have taken shelter.

5. **Final Connection.** In electric blasting, the blaster in charge shall personally make the final connection and the charge shall be fired by him personally or on his order.

0862. ELECTRICAL WIRING

1. **Voltage.** When blasting is done by electricity from power circuits the voltage shall not exceed 250 volts.

2. **Exclusive Use.** Wiring circuits for blasting shall not be used for other current-carrying purposes.

3. **Overhead Wires.** Blasting circuit wires shall not cross under overhead electrically charged wires.

4. **Safety Switches.** Blasting operation controls shall consist of two safety switches (a safety switch and a firing switch) located at least 6 feet apart. Connection between the switches is to be made by a "plug in" jumper which cannot be plugged into the firing switch without unlocking it and which must be removed to lock the switch.

5. **Locking Switches.** Switches shall both be of a locking, double-pole, double-throw type, and they are to be opened and locked in the downward position, which short circuits the leading wires when in the open position. The jumper may be permanently attached to the safety switch.

6. **Testing of Circuits.** Blasters shall test wiring circuits through charged holes only with approved types of galvanometers, that is, those complying with the current edition of Federal Specification W-B-411. No tests of circuits in charge holes shall be made until men are removed to a safe distance. Lead wires shall be of sufficient length to permit testing from a safe distance. If electric detonators are used, the leads of these devices shall be short circuited by twisting the naked ends together and shall remain so twisted until ready to be connected to the firing line.

7. **Electrical Firing.** The blaster will avoid trouble in electrical firing by following these rules:

a. Tight connections must be made.

b. There must be no short circuits or breaks in the wires.

c. A series connection should always be made when firing with a blasting machine.

d. Detonators or relays from different manufacturers should not be used in the same series.

e. Care should be taken not to damage the insulation of wires when tamping charges.

f. Plenty of time should be taken to check the wiring before firing. Before attempting to fire, the circuit should be tested with a blasting galvanometer to see that the resistance is correct.

0863. INSPECTION AFTER BLASTING

1. **Disconnecting Lead Wires.** After a blast has been fired electrically the lead wires shall be immediately disconnected from the blasting machine or the switch box and carried back at least half the distance to the area of the blast. All wires shall be carefully traced and a search made for unexploded charges.

2. **Waiting Period.** At least 15 minutes shall elapse before investigation of the blasting site shall begin. After this waiting period and after smoke and fumes have cleared to permit good visibility, a thorough inspection shall be made by or under the direction of the blaster to determine whether all charges have been exploded. No other persons shall be allowed to enter the danger zone until the inspection has been completed.

3. **Misfire with Cap and Fuse.** If cap and fuse are used, the blaster shall not return to a misfire until at least 10 hours have elapsed or such longer time as required by state law.

4. **Entering Danger Zone.** If unexploded charges are discovered, no persons other than those required to handle such misfires shall be allowed to enter the danger zone until the charges have been fired or otherwise destroyed.

0864. MISFIRES

1. **Blaster Responsible.** All operations connected with the handling of misfired charges shall be performed only under the direct supervision of the blaster.

2. **Mishandling Blasting Machine.** In electrical firing it is important that the blasting machine be operated with force and speed, since the faster the rack bar is pushed down, the more current flows through the circuit at the end of the stroke. Observance of this precaution will prevent many misfires.

3. **Faulty Connection.** When a misfire is located after a blast, a galvanometer shall be used to test the circuit for broken wires or faulty connections. If a short circuit or faulty connection is determined to be the cause of the misfire, proper repairs shall be made, the lead wires reconnected, and the charge fired.

4. **Inserting New Primer.** When an unexploded charge cannot be fired through existing connections, the stemming material shall be removed, a new primer inserted and the charge fired.

5. **Removing Stemming Material.** Where it is necessary to insert a new primer in an unexploded charge confined by a solid stemming material, the stemming material shall be removed only by means of a stiff rubber hose with water under pressure. (For complete information, see "The Blaster's Handbook," published by E. I. DuPont de Nemours and Co., Inc.)

6. **Extracting Explosives Prohibited.** No person shall be permitted to extract explosives from an unfired hole.

7. **Guarding Unfired Charge.** Under no conditions shall unfired charges be left unattended overnight or until the next shift.

8. **Electronic Transmitter Hazard.** Premature firing of electrical blasting circuits can be caused by radio frequency energy. Activity regulations concerning electrical blasting shall take into account the location and characteristics of electronic transmitters both within and outside the confines of the activity. Regulations to minimize this hazard shall comply with precautions described in "The Blaster's Handbook," published by E. I. DuPont de Nemours and Co., Inc.

9. Where the hazard of R-F energy cannot be avoided, blasting shall be done by cap and fuse.

CLEARING AND GRADING

0870. GENERAL

1. **Protective Equipment.** Personal protective equipment or apparel of approved type shall be worn by workers for protection against eye, head, leg, or foot injuries, and while working in water or swampy areas and on ice and other hazardous surfaces.

2. **Carrying Cases for Tools.** Sharp-edge tools shall be transported in carrying cases or sheaths.

3. **Machetes.** Machetes shall be kept in sheaths at all times except when in actual use.

4. **Standing Clear.** All hands shall stand as far away as possible from moving machines, equipment, or moving logs and taut lines.

5. **Lighting.** When operations are conducted at night, adequate artificial illumination shall be provided either in the form of headlights or by general lighting of the work area.

0871. FELLING AND TRIMMING TREES

1. **Clearing Underbrush.** All underbrush, vines, small trees, etc., that will interfere with felling operation, shall be cleared before trimming or felling begins.

2. **Dead Limbs and Rotten Hearts.** Before felling, all trees shall be inspected for rotten hearts, dead or entangled limbs, or similar hazardous conditions. Dead or entangling limbs which endanger employees shall be removed.

3. **Skilled Supervisor.** Trees which present an unusual hazard, such as dead, hollow, or leaning trees, or those with multiple growths or rotten heart shall be felled under the direction of a skilled supervisor.

4. **Undercutting Trees and Use of Wedges.** All trees shall be properly undercut before felling, with a deep "V" grooved notch on the side where the tree is to fall. Wedges shall be used to throw all balanced trees.

5. **Warning of Falling Tree.** Persons in the danger areas shall be warned prior to the felling of trees. A loud warning call, "TIMBER" shall be given at the time of the felling of each tree.

6. **Avenues of Escape.** Persons engaged in felling trees should look over the area carefully before starting to fell a tree, and note mentally the existing avenues of escape.

7. **Carrying Unguarded Tools.** Workmen shall never climb trees while carrying unguarded sharp-edged tools.

8. **High Winds.** Working in or on trees during high winds is prohibited, except in an emergency and then only under the supervisor's direct supervision.

9. **Securing Felled Tree.** After felling a tree, the tree must be lying on the ground and adequately chocked or otherwise secured before leaving it or going to the next tree.

10. **Trimming Branches.** Before felled trees are trimmed, they shall be properly secured by chocking or other means to prevent them from rolling.

11. **Use of Chain Saws.** Extreme care shall be exercised when using chain saws to fell trees. Chain saws shall not be used to fell rotten heart or hollow trees.

0872. BURNING

1. **Conducted in Clear.** Burning operations shall be kept under strict control and not left unattended. *They shall always be conducted in the clear,* where the fire will not ignite leaves, dry wooded areas, or nearby buildings. Workmen shall not stand in the smoke. All burning or smoldering material must be *completely extinguished* before workmen leave the scene.

2. **Windward Side.** Firing, punching, and placing of material for burning shall be done from the windward side. This is especially

important when poison oak, poison sumac, or poison ivy is being burned.

3. **Flammable Liquids.** Workmen shall never use flammable liquids on piles of material which are burning or smoldering.

0873. POISONOUS PLANTS

1. **Scrubbing Skin.** If a workman has been in contact with poison ivy, poison oak, or sumac, the skin should be swabbed with alcohol and scrubbed with laundry soap and water. A brush or a rough cloth should not be used as they might irritate the skin and increase the danger of poisoning.

2. **Protective Clothing.** Heavy gloves and clothing should always be worn when handling poisonous plants. The clothing should be changed daily.

3. **Burning Poisonous Vines.** When burning poisonous vines it is important to keep away from the smoke, which will carry the poison and may be inhaled.

4. **Medical Care.** If infection develops after contact with poisonous plants, a physician should be consulted. Self-medication with poisonous plant immunization or desensitization extracts should never be undertaken. Men who are extremely sensitive to these poisons should be transferred to other jobs.

0874. BULLDOZERS AND TRACTORS

1. **Speed of Operation.** Equipment of this type shall be operated at a speed such that the machine can be kept under control at all times.

2. **Guards.** Bulldozers used in clearing operations shall be equipped with crank-case guards and radiator protection.

3. **Falling Objects.** Care must be exercised when using a bulldozer for demolition work, to prevent falling objects from hitting the operators or personnel assisting in the operation.

4. **Felling Trees.** When felling trees with a bulldozer care must be used to avoid falling branches, kickbacks, etc.

5. **Riding Drawbar.** Workmen shall never ride on the drawbar of a tractor. Many serious accidents have resulted from this dangerous practice.

6. **Location of Operations**

a. **Underground Utilities.** Operators of bulldozers should find out whether there are or may be underground high voltage cables or gas lines in the area.

b. **Operating Close to Cut.** Bulldozers shall not be operated too close to the edge of a cut, since the bank may give way causing the machine to fall into the hole and be overturned.

c. **Inclines.** Operators shall drive up sharp inclines slowly and carefully; "gunning" a bulldozer or tractor up a steep or broken slope may cause overturning.

d. **Turning on Slope.** Operators shall not attempt to turn around on a steep slope. They should back up (or down). Sliding sidewise is not in itself dangerous; it is the sudden stop when the tractor hits a solid rock or stump which creates the real danger of the machine rolling over.

7. **Towing**

a. **Checking Hitch.** The operator shall himself check the hitch before starting a tow; a runaway tow is a serious hazard.

b. **No Substitute for Tow Bar.** Chains, wire lines, and makeshifts shall not be used for towing; a tow bar shall always be used.

c. **Coupling Trailing Equipment.** Coupling up trailing equipment to the tractor is hazardous. The operator shall be sure that the gear shift is in neutral.

d. **Low Gear on Down Grade.** When towing a heavy load down grade, the tractor shall be kept in a low gear. Coasting is dangerous; it may cause the tractor to "jackknife".

e. **Detaching Tractor.** After pulling the pin to detach the tractor from a piece of rolling equipment, the groundman shall move into the clear where he can signal the tractor operator. His position then should be such that he can see both pieces of equipment, all obstructions in the line of travel, and the other workmen.

0875. GRADERS

1. **Load Limits of Bridge or Ramp.** Operators shall never operate heavy equipment of this type over a bridge or ramp until load limits have been checked and the bridge ramp approved for that purpose.

2. **Marking with Red Flag.** When a blade grader is being operated slowly on a highway or roadway in hilly or rolling country, a red cloth flag shall be displayed on a staff which projects at least 6 feet above the left rear wheel. In such cases the grader shall be kept to the right of the highway.

3. **Riding on Grader.** Operators shall always ride on the seat or stand on the platform of the grader. They shall never ride on the tandem or on the back of the grader. They shall never permit other persons to ride on the grader in any place except inside the cab or on the platform.

4. **Engaging Clutch.** Operators shall be sure that the gear shift is in neutral before they start the engine. The clutch should always be engaged gently, especially when going up a hill or pulling out of a ditch.

5. **Turning and Braking.** Operators shall always reduce speed before making a turn or applying the brakes.

6. **Down Grades.** The grader shall always be kept in gear when going down steep grades.

7. **Holes on a Hillside.** Extra care should be taken when working on hillsides, to drive slowly and watch out for holes or ditches into which a wheel may drop and cause the grader to overturn.

8. **Pulling Loads.** Graders shall not be used to pull stumps or other heavy loads.

9. **Warning of Obstructions.** There shall be close cooperation between the driver of the towing equipment and the grader operator so as to avoid shocks or jars to the scraper. Drivers should warn the rear operator of holes, rock outcrops, or stumps in time to prevent damage to the machine or possible injury to the operator.

0876. SCRAPERS

1. **Speed of Operation.** Scrapers shall be operated at speeds consistent with conditions on the particular job.

2. **Scraping Shoulder of Road.** Scrapers should be driven off the shoulders of roads only at slow speeds. On some machines the sudden dropping of one wheel results in violent tilting, with the possibility of serious injury to the driver caused by his being thrown off the machine or against wheels or levers.

3. **Line Attached to Pulling Unit.** A scraper shall never be operated without a safety line attached to the pulling unit. Failure of the drawbar can result in a serious accident.

4. **Replacing Blades.** The scraper bowl should always be blocked up when the blades are being replaced.

5. **Platforms Clear of Debris.** The operating platforms of scrapers and graders shall be kept free of material and debris, also from grease, oil, or mud.

6. **Braking.** When going down hill the operator should not kick the machine out of gear, because increased speed may make control of the equipment extremely difficult. He should leave the machine in gear and use his brakes to control the speed. If the brakes will not hold the load, the operator should drop or drag the scraper bowl to make an emergency stop.

7. **Directing Traffic.** Operators of scraper machines shall not attempt to direct traffic while operating the equipment. A competent signalman should be assigned to direct traffic.

8. **Marking Drag.** Vehicles drawing a drag shall be marked to indicate the presence of the drag, or a flagman shall be stationed so as to warn other drivers of the danger.

EXCAVATION

0880. GENERAL

1. **Regulations.** Where they are applicable, federal, state, or local codes, rules, regulations and ordinances governing any and all phases of excavation work shall be observed at all times.

2. **Underground Utility Installations.** Every effort should be made prior to making an excavation to determine whether utility installations (sanitary and storm sewers; water, gas and electric lines; gasoline tanks; etc.) are to be encountered. When the excavation approaches the estimated level of such an installation, the installation should be located from blueprints, if available, or by careful probing and digging, and when uncovered, it should be properly supported and protected.

3. **Removal of Obstacles.** Trees, boulders, and other surface encumbrances located so as to create a hazard at any time during operations shall be removed before excavation is started.

4. **Shoring Adjoining Walls.** If the stability of adjoining buildings or walls is endangered by excavations, necessary shoring, bracing, or underpinning shall be provided to insure their safety. Such shoring, bracing, or underpinning shall be frequently inspected by a competent person and the protection effectively maintained.

5. **Bracing Nearby Excavation.** If it is necessary to place or operate power shovels, derricks, trucks, material, or other heavy objects on a level above and near an excavation, the side of the excavation shall be sheet-piled, shored, and braced as necessary to resist the extra pressure due to such superimposed loads.

6. **Protecting Masonry Wall.** Wherever any side of an excavation is a masonry wall, such wall shall be braced to insure stability. This shall not include reinforced concrete walls known to be of ample strength.

7. **Sheet Piling.** Temporary sheet piling which has been installed to permit the construction of a retaining wall shall not be removed until such wall has acquired its full strength.

8. **Digging Below Foundations or Retaining Walls.** Except in hard rock, excavations below the level of the base or footing of any foundation or retaining wall shall not be permitted unless the wall is underpinned and all other precautions taken to insure the stability of the adjacent walls for the protection of the workmen.

9. **Undercutting Earth Banks.** Undercutting of earth banks shall not be permitted unless they are adequately shored.

10. **Inspection After Rainstorm.** Excavations shall be inspected after every rainstorm or other hazard-increasing occurrence, and the protection against slides and cave-ins increased if necessary.

11. **Landing Platforms.** All fixed-in-place ladders and stairways giving access to levels 20 or more feet apart shall be provided with landing platforms at vertical intervals of not more than 20 feet. Every landing platform shall be equipped with standard railings and toe boards.

0881. PROTECTION OF THE PUBLIC

1. **Walkways and Thoroughfares**

a. **Guardrails.** All public walkways, sidewalks, and thoroughfares bordering on or running through any construction site shall be provided with substantial guardrails or board fences. In addition, temporary footwalks beyond the curb shall be substantially constructed and provided with protection on both sides.

b. **Clear of Obstructions.** Sidewalks and walkways shall be kept clear of excavated material or other obstructions and no sidewalks shall be undermined unless shored to carry a live load of 125 pounds per square foot.

c. **Fastening Planks.** If planks are used for a sidewalk they shall be butt ended and cleated underneath to prevent displacement. Planks shall be uniform in thickness and all exposed ends shall be beveled to prevent tripping.

d. **Raised Walkways and Ramps.** Raised walkways shall be provided with plank steps on strong stringers. Ramps used in lieu of steps shall be provided with cleats to ensure safe walking.

2. **Warning Signs and Watchmen.** A flagman or watchman shall be designated to warn the public of the approach of trucks and to direct the trucks in and out of the property. Danger or warning signs shall be posted at all truck entrances and exits.

3. **Illumination.** During the hours of darkness, all public sidewalks and walkways shall be adequately illuminated, and warning lights or flares shall be placed about the property to ensure safety for pedestrians and vehicular traffic.

4. **Overhead Protection.** The public shall not be required or permitted to travel under loads handled by power shovels, derricks, or hoists, unless ample side barricades and overhead protection are provided.

0882. BRACING OF EXCAVATION

1. **Amount of Bracing.** All shoring, bracing, or sheet piling shall be consistent with the magnitude of the work and the character of the soil or material in which the excavation is made.

2. **Protection Against Caving.** If men are working near the face of an excavation, where the ground is cracked or of such character that caving is likely to occur, sheet piling with shoring and bracing necessary to prevent caving shall be provided.

3. **Quality of Timber.** All timber used for shoring, bracing, and sheet piling should be sound straight-grained timber equal to long leaf yellow pine, Douglas fir, or other materials of equal strength. All timber shall be free from splits, shakes, large or loose knots, and shall be of the required dimensions throughout.

4. **Wooden Sheet Piling.** Wooden sheet piling shall be not less than 2 inches in thickness. The thickness shall be increased as required to adequately support the sides of the excavation.

5. **Temporary Bracing.** Where temporary sheet piling is used during excavation work, the shoring and bracing to be provided shall comply with the requirements which follow.

a. **Intervals.** When shores and braces are required they shall be placed at intervals of not more than 8 feet measured parallel with the sheet piling.

b. **Soil Pressure.** Shores or braces shall bear at the earth against a footing of sufficient area to keep within the allowable soil pressure, "dead men" being buried when necessary to resist the thrust of the braces.

c. **Wedges.** Shores or braces at the sheet piling shall not be cut to a bevel but shall be held by wedges and the wedges shall be nailed.

0883. LOADERS

1. **Clear of Chains and Sprockets.** Operators shall stay away from chains and sprockets of the driving mechanisms of all types of loaders, particularly from the loading end.

2. **Guarding Belts and Shafts.** Where practicable, the belts and transmission shafts of loaders shall be guarded.

3. **Electric Motor.** Where an electric motor is used as the motivating force the motor should be completely enclosed, properly grounded, and electric conduit of approved type used to connect the motor to the power supply.

4. **Combustion Engines.** Where a combustion engine is used as the motivating source, transmission lines, gears, shafts, and other moving parts should be completely guarded.

5. **Workmen Clear.** Workmen engaged in the area where loaders are operating shall

take great care to stay well away from the loaders. All the precautions which should be observed by the operators of trucks, graders, pavers, and other power-driven equipment, and by employees who work around such machinery, are directly applicable to loaders.

0884. POWER SHOVELS

1. **Inspection and Testing.** Power shovels shall be inspected and all motions, brakes, and clutches tested, before starting work.

2. **Soft Ground.** Extreme care should be exercised when setting the power shovel. Mats or heavy planks should be used on soft ground.

3. **Operator Restrictions.** No unauthorized person shall be allowed on the operating platform when the shovel is in operation, and the operator shall not converse with anyone while operating the machine.

4. **Access to Platform.** A suitable ladder, or steps and handholds, shall be provided on power shovels to afford safe and easy access to the operating platforms; these devices shall be maintained in good condition.

5. **Removing Shovel for Repairs.** In case of a breakdown, the shovel should be moved well away from the foot of a slope before repairs are undertaken.

6. **Range of Swing.** All persons *must* keep away from the range of the shovel's swing, to avoid being struck by the cab as it rotates. When workmen are required to do some particular work at the rear of the cab of a shovel, they should notify the operator that they are working there.

7. **Replacing Wire Cables.** The wire rope cables on power shovels shall be regularly inspected and shall be changed when 10 percent of the wires in any 3 feet of length are broken.

8. **Leaving Cab.** Shovel operators shall not leave the cab while the master clutch is engaged.

9. **Leaving Bucket on Ground.** All shovels when not in use shall be left with the bucket on the ground.

10. **Clearing Overhead Wires.** Whenever it is necessary to move the shovel under electric wires, there shall be a clearance of at least 10 feet. All necessary precautions shall be taken to prevent contact with the wires.

11. **Grounding.** Power shovels should be effectively grounded and otherwise protected against the hazards of static electricity.

12. **Ramps.** Ramps to be used by power shovels should not be made too steep. The brakes and travel mechanisms should be checked before traversing ramps.

13. **Slides.** When excavating in a bank of sand, gravel, or rocks which has been dynamited, shovel operators must be very careful not to cause a slide by digging the shovel too far into the bank or making cuts too deep.

14. **Shovel as Refuge.** When blasting, the shovel shall not be used as a safety refuge.

15. **Leaving Cab While Loading.** Drivers shall not remain in the seat or cab of a dump truck which is being loaded by a power shovel, a clam shovel, drag line, or other overhead means, even if the truck top is equipped with a steel protective shield. They shall always set the brakes, leave the cab, and remain outside the reach of the swing of the bucket until the truck has been loaded.

16. **Equipped as Cranes.** Precautions for power shovels equipped as cranes will be found in articles 0825-0830.

0885. JACKS

1. **Size.** Workmen should always select the proper size of jack for the load to be lifted. A jack of too light capacity can strip itself, releasing the load; and a jack with too little height will run itself out before accomplishing the purpose intended.

2. **Inspection.** The jack should be inspected before using. If there is any doubt

about the jack's condition, it should not be used.

3. **Footing.** The jack should be placed on a firm footing where it cannot slip or kick away.

4. **Blocking or Cribbing.** When the object has been lifted to the desired height, blocking or cribbing shall be immediately placed under it.

0886. RAMPS AND RUNWAYS

1. **Dimensions.** Ramps or runways used for vehicles shall have a width of not less than 12 feet. Timber guards not less than 8 inches by 8 inches shall be securely fastened on top of the runway along each of the outside edges.

2. **Railings.** Ramps or runways, when used as passageways for workmen, shall be provided with standard railings.

3. **Ruts and Holes.** All ramps and runways shall be maintained in a safe and serviceable condition. When ramps and runways are formed on hard ground without the use of planking, ruts and holes greater than 2 inches deep shall not be permitted.

4. **Blocking Stalled Trucks.** When the pitch of the ramp requires it, a man shall be alongside a loaded truck with a chock provided with a strong handle for blocking a rear wheel if the truck is stalled or otherwise forced to stop on the ramp.

5. **Keeping off Ramps.** Workmen, other than chockers, shall be instructed to stay off ramps and runways when trucks are passing over them.

6. **Foot Cleats.** Where the incline of the ramp is too steep for safe walking, foot cleats, not more than 16 inches apart, shall be provided to prevent slipping.

0887. TRENCHES

1. **Shoring.** Particular attention should be given to shoring of trenches, especially if there are roadways or railroad lines in the vicinity of the excavation or if men are to work in the trench. In the following paragraphs, provisions for shoring and bracing of excavations shall apply, except when the full depth of the excavation is in stable solid rock, hard slag, or hard shale or the shoring plan has been designed by a qualified engineer.

2. **Depth and Drainage.** The sides of excavations 4 feet or more in depth, or in which the soil is so unstable that it is not considered safe at greater depths, should be supported by substantial and adequate sheeting, sheet piling, bracing, shoring, etc., or the sides sloped to the angle of repose. Surface areas adjacent to the sides should be well drained. Trenches in partly saturated, filled, or unstable soils, shall be suitably braced.

3. **Storing Material Nearby.** Excavated or other material shall not be stored nearer than 2 feet from the edge of a trench. In the case of extremely deep trenches, material should be stored farther away than 2 feet. The safe storage distance is in proportion to the depth of the trench; the deeper the trench the farther away the material should be stored.

4. **Hazards to Traffic.** Where pedestrian and vehicular traffic is to be maintained over, or adjacent to excavations, proper safeguards should be provided, such as walkways, bridges, guardrails, barricades, warning flags, or lights.

5. **Close to a Cut.** Where an excavation is close to a cut, particularly when nearer to the cut than its depth, special shoring should be used. Men working in deep trenches shall wear hard hats as a protection against falling material.

6. **Ramps, Ladders, and Hoists.** Access to excavations over 5 feet deep should be by ramps, ladders, stairways, or hoists. Workmen should not jump into the trench. They shall not use the bracing as a stairway.

7. **Debris.** No tools, materials, or debris should be left on walkways, ramps, struts, or near the edge of an excavation. Such material might be knocked off or cause a worker to lose his footing.

8. **Distance between Workers.** Pick-and-shovel men working in trenches shall keep a sufficient distance apart so they cannot injure each other.

9. **Gas or Oil Hazards.** Extra care should be used in excavating around gas mains, oil tanks, gasoline or oil pipe lines, etc. Smoking or open fires of any kind are prohibited in areas where gaseous conditions are suspected. In such places the air should be tested and, if gas is present, ventilation should be provided by portable blowers or other satisfactory methods.

10. **Barricades and Lights.** Workmen shall put up barricades and lights around the excavation at the end of each work shift for the safety of personnel moving in that area after dark.

0888. DITCHING MACHINES

1. **Clear of Debris.** The runways, steps, and handholds of ditching machines shall be kept clear of waste oil, grease and loose tools in order to minimize the possibility of slipping or falling.

2. **Care When Starting.** Extreme caution shall be used at all times around the machine while the engine is running. Before starting the machinery, care shall be taken to see that all persons are at a safe distance from the moving parts.

3. **Attending Machine When in Operation.** Operators of ditching machines shall never leave the operator's position while the machine is in operation, or attempt to remove objects from the conveyor while it is in operation.

4. **Clearing Buckets.** When clearing the buckets of large rocks, sticks, and roots, workmen out in front of these machines should be afforded a handhold of some kind on the machine. These workers are in danger of falling against moving parts or dropping on to the bucket wheel or chain should the banks cave in. A railing should be placed around the bucket chain on those ditchers which are suited to such action.

5. **Standing On or Near Ditchers.** Workmen shall never stand on the ditching machine, or between the machine and high banks of soft material where there is danger of a cave-in. When working around a ditcher, they should always be sure that the gear driving that unit is in neutral position.

6. **Parallel to High Bank.** When excavating in a direction parallel to high banks, ditching machine operators shall exercise caution to prevent loose material and objects from becoming dislodged and falling down on workmen below.

7. **Leaving Buckets in Ground.** Ditcher buckets shall not be left in the ground when not operating. The sides of the ditch can cave in and injure personnel.

8. **Lighting and Flagging.** Trenching machines and their operations shall be well flagged by day and adequately equipped with lights when used at night.

9. **Pushing Displaced Dirt.** Long handled shovels shall be utilized by workmen engaged in pushing displaced dirt out of the path of the trenching machine buckets.

0889. PNEUMATIC PAVING BREAKERS AND ROCK DRILLS

1. **Goggles.** Suitable goggles shall be worn when operating these machines to protect the eyes from flying particles.

2. **Paving Breaker.** Operators must make sure that the breaker and its accessories are in good working condition.

3. **Valves and Trigger.** When air is used for power, the valves and connections shall be checked carefully. Also, when laying down these pneumatic tools, the operator must be careful to see that the trigger cannot be operated accidentally.

4. **Untempered Tools.** When shock tools are re-dressed the heads shall not be tempered, since hard heads will spall and are more dangerous than those which mushroom.

5. **Kinking Hose.** Pneumatic paving breaker operators shall never cut off the air

supply to the machine by purposely kinking the hose while disconnecting this equipment. Air shall be cut off at the source.

6. **Barriers.** If the job is near a sidewalk or other thoroughfare, canvas barriers or other suitable screens shall be placed on either side to protect passers-by from flying particles.

7. **Roughing Concrete Surfaces.** When using a paving breaker to break up extremely hard materials such as heavy blocks imbedded in concrete slabs or with hard and slick surfaces that may cause the tool to slip around instead of biting into the surface, workmen should first use a sledge hammer to roughen the surface. This practice will guard against breaking or cutting the legs or feet.

0890. PILE DRIVING

1. **Crew.** Each member of a pile-driving crew shall be carefully chosen and shall be experienced or instructed in detail in the work he is to do.

2. **Signals.** Engineers and winchmen shall not accept signals from anyone but a supervisor or other person especially appointed to give signals. The code of signals used shall be posted in an easily visible place.

3. **Steam Condensation.** Engineers shall not blow condensation from a steam-driven apparatus while employees are in a nearby exposed position.

4. **Protective Apparel.** All men handling piles shall wear heavy gloves, safety shoes, and protective hats. Shin and foot guards shall always be worn when heading or pointing piles with axes.

5. **Protection from Creosote Spray.** When working with creosoted material workmen shall put on goggles and apply a protective cream or lotion to all exposed parts of the body to protect their eyes and skin from creosote spray.

6. **Pile Driving in Water.** Where pile driving is done in water from a trestle or from a floating rig, men shall be provided with kapok life vests or jackets or the equivalent. Each rig shall be equipped with life preservers and life lines for emergency use.

7. **Hammer and Driving Heads.** When a pile driver is not in use the hammer shall be held in place at the bottom of the leads by a cleat or timber. Driving heads shall be tied in whenever the rig is being used to shift cribbing or other material.

8. **Grabline.** The grabline shall be in place at all times.

9. **Making Repairs.** Repairs shall never be made to any steam or air equipment while it is in operation or under pressure.

10. **Defective Air Hose.** When compressed air equipment is used, defective air hose shall be promptly replaced. Inspections should be made frequently to locate defects.

11. **Platform Clear of Debris.** The main working platform on the pile driver shall be kept clear of lumber, ropes, and tools.

12. **Overhead Wires.** Care must be exercised to see that the high parts of the pile driver do not come in contact with overhead electric power lines when the equipment is moved.

13. **Drums, Brakes, and Leads.** Hoisting drums and brakes shall be kept in the best of condition and sheltered from the weather. Leads shall be kept well greased to provide for perfectly smooth travel of the hammer.

14. **Danger from Hammer.** A workman shall never place his head or other part of his body under a suspended hammer that is not dogged or blocked in the leads.

15. **Cutting and Burning.** When steel piling or other metal is being cut by burning, the operator shall wear goggles or a helmet designed to protect the eyes against harmful rays.

0891. WELL DRILLING

Precautions for well drilling and earth boring equipment are similar to those listed above for pile driving.

0892. DREDGING

1. **Deck Areas Clear.** Good housekeeping shall always be observed on operating dredges. Deck work areas, ladders, catwalks, and passageways shall be kept clear of trash and loose material. Deck fittings and similar hazards should be painted No. 14 Brilliant Yellow (see NAVDOCKS P-309).

2. **Lights and Fog Horns.** Dredges operating in navigable waters must be lighted and meet all other navigational requirements. In foggy weather, horns or bells must be used to warn all watercraft of the proximity of the dredge to traffic.

3. **Overhead Power Lines.** Workmen on dredges shall never under any circumstances throw ropes or tapes over an electric power line under which the dredge must pass. Such lines may become wet through handling, resulting in a serious electrical burn or fatality.

4. **Floating Pipe Lines.** Walkways on floating pipe lines shall be provided with suitable handrails and kept in good condition. Floating lines must also be properly lighted to meet navigational requirements.

5. **Personnel Protection**

   a. **Life Preservers and Lines.** Dredges and floating lines shall always be equipped with life preservers and life lines for use in emergencies.

   b. **Safety Vests.** Deck hands working on dredges or in small boats shall wear an approved type of life vest or jacket all the time they are on duty. If the vest becomes wet personnel should change to a dry one as soon as practicable.

6. **Special Handling Equipment.** When engaged in major repair operations such as dismantling the dredge pump to remove large boulders or tree trunks, removing cutters, or repairing pipe lines or shafting on the dredging ladders, workmen on dredges must use the special handling equipment provided and should exercise extreme caution in handling these heavy parts so as to prevent injury and drowning.

7. **Using Small Boats.** When approaching the dredge or floating pipe line in a small boat, the approach shall always be made heading into the tide. The boat shall be securely fastened to the dredge or pipe line before any worker leaves it; the oars shall be removed from the locks and placed in the bottom of the boat while not in use.

564-350 O - 74 - 13

Chapter 9
METAL WORKING

THE MACHINE SHOP

0901. SCOPE

The safe practices described in this chapter are applicable to all types of power-driven tools and should be used by all machine operators to avoid accidents involving themselves and other personnel. If there is any doubt about a safe procedure, the supervisor shall be consulted.

0902. HOUSEKEEPING

1. Areas around machines should be kept clear of obstructions and in nonslippery condition. All spilled oil or grease shall be cleaned up immediately.

2. Employees must keep their machines clean.

3. Do not clean chips from the surface of machines with compressed air or with hands; a brush or hook should be used. Where general cleaning of machines and equipment by compressed air is considered necessary, the outlet pressure shall be reduced to not more than 10 p.s.i. by means of a regulator or pressure reducing control nozzle designed for this purpose.

4. Cleaning of one's clothes with compressed air is prohibited.

5. When using portable electrical equipment around machine tools, keep all electrical cords clear of moving parts.

6. Do not place hand tools on lathes or other machines. Keep them in their assigned location. There are certain areas on some lathes and machines which are useful for laying hand tools, as well as wooden platforms especially built to fit across the way of the lathes, which may be used for hand tools.

0903. PROTECTIVE CLOTHING

1. Loose, flowing, or torn clothing, gloves, neckties, long sleeves, and rings or bracelets shall not be worn around machinery. Snug-fitting clothing shall be worn.

2. Goggles or face shields shall be worn when grinding or when there is danger of flying particles.

3. Gloves are *not* to be worn around rotating machinery unless sharp or rough materials are being handled. If gloves are worn because of sharp material, great care should be exercised to prevent their being caught in the machinery.

4. If clothing becomes caught in a machine, the power shall be shut off immediately.

0904. MACHINE GUARDS

1. All guards on saws, drill presses, and machines are to be properly adjusted and in working order before starting the machine.

2. All gear and belt guards must be in place before machine is operated.

3. Machine guards must be kept in position at all times unless removal is authorized for repairs or cleaning.

0905. PRELIMINARY PRECAUTIONS

1. No employee shall be permitted to operate a machine with which he is unfamiliar.

2. Be sure all is clear before starting any machine.

3. Do not start a band saw or saw of any type without first determining that the blade is in good condition and operating freely.

4. Unless conditions make it impractical, no employee should be permitted to operate electric or mechanical equipment or machines in a building or room when alone.

5. Before operating a machine make sure there is plenty of light to work by.

6. See that tools and work are properly clamped before starting the machine.

7. Switch and clutch of power equipment shall be located so that operator can control power without reaching across work.

0906. REPAIRING MACHINERY

1. All needed repairs shall be reported. Repairs, unless otherwise authorized by the supervisor, are to be made only by a repair mechanic.

2. Do not repair, oil, or clean machinery while it is in motion. Lubrication while machinery is in motion shall be done by remote control lubricating system.

3. Shut off the power to machines during repairs or adjustment and attach a warning card to the switch. Lock switch with a padlock to insure that the machine will not be energized by other personnel.

4. Switches and valves, movement of which will endanger personnel working on lines and machinery, shall first be locked by the man in charge of the work before permitting work thereon.

5. The power shall be shut off when changing such machine parts as face plates or chucks on lathes.

6. Block up ram and cut switches on power hammers, punches, and presses when it becomes necessary to place any part of the body underneath it.

7. Replace machine guards after repairing, oiling or greasing, or after inspections have been completed and before the machine is started.

8. All tools used in making repairs or adjustments shall be removed so that all working parts of the machine will be free to move without damage. Care shall be taken that no one is in a position to be injured when the machine is again set in motion.

0907. OPERATING PRECAUTIONS

1. Do not attempt to adjust a tool or feel of the cutting edge while the machine is in motion.

2. Moving belts shall not be shifted except with a belt pole or suitable stick. Do not use hands or feet to shift belts.

3. Never apply a wrench to revolving work or parts.

4. Do not use steel hammers to knock cutters into position.

5. Do not use hands or body to stop moving parts, even when the power is shut off.

6. Never lean against a machine that is running.

7. Never leave moving machinery unattended.

8. Do not distract the attention of a machine operator.

9. Excessive cutting speeds, feeds, and depth of cut should be avoided.

10. Cutting tools shall be removed from machines when not in use.

0908. WIRING

1. **Insulation.** Do not use electrical equipment or machines with frayed or otherwise deteriorated insulation.

2. **Grounding.** Electrically driven portable machinery as well as fixed electrical equipment shall have the frame grounded (see article 1512).

MACHINE TOOLS

0915. LATHES

1. **Dangers.** The principal sources of injury to lathe operators are: projections on face plates and chucks; projecting set screws in lathe dogs; projections on the work; chips; cutting fluid; handling heavy chucks or stock; and rotating stock projecting from turret lathes and automatic screw machines.

2. **Shields and Guards.** Face plates and chucks should have no projections; or circular shields should be installed to prevent accidental contact with projections. Safety type lathe dogs, with no projecting set

screws should be used. Chip guards, particularly on high speed operations, are recommended. Splash guards should be provided to protect the operator and the working area from cutting or cooling fluids thrown from the work. Pipe guards or other enclosures should be installed to prevent injury from stock projecting from turret lathes or automatic screw machines.

3. **Protruding Tail Stock.** Completely cover all tail stock protruding from the end of a machine lathe when the machine is in operation.

4. **Filing.** When filing close to chuck or dog, always file left-handed. Never use a file with an unprotected tang; use a file handle.

5. **Installing Chucks.** Chucks or face plates on lathes shall be installed by hand power only. The power which drives the machine shall never be used for this purpose.

6. **Handling Chucks.** Mechanical lifting devices should be provided for handling heavy chucks.

0916. MILLING MACHINES

1. **Dangers.** The chief hazards of the milling machine are created by the rotating cutter and flying chips.

2. **Guards.** A transparent shield over the cutter will prevent accidental contact with the cutter and serve also as a chip guard. Guards may be adjustable.

3. **Control Buttons.** Control buttons and levers should be readily accessible to the operator. Hands shall be kept away from work when machine is running.

4. **Clamping Work.** The cutter and arbor shall be secure. The work shall be clamped securely before the machine is started.

0917. SHAPERS AND PLANERS

1. **Railings.** To minimize the hazard created by the movement of the carriage or table, railings extending beyond the farthest point of travel should be installed.

2. **Wire Guard.** Where practicable, a readily detachable chip guard of heavy wire mesh should be placed over the cutting tools.

3. **Openings in Planer Bed.** All openings in shaper and planer beds should be filled solidly or completely covered.

4. **Goggles.** The operator shall wear goggles and stand out of the line of flying chips.

5. **Loosening Tool Holders.** When tool holders are being loosened, the tool shall be held with one hand or a support placed under it.

6. **Adjusting Bed Stroke.** The planer shall be idle when the length of the bed stroke is being adjusted. No one shall ride the bed at any time. Tools of any kind shall not be left under the bed.

7. **Removing Chips.** A brush—never hands—shall be used to remove chips; chips shall be kept off the ways, floor, and bed of planer.

0918. DRILL PRESSES

1. **Dangers.** Most drill press injuries result from projection on the spindle, insecurely clamped work, accidental contact with the drill, or the breaking of the drill.

2. **Enclosing Spindle.** The spindle should be enclosed as completely as possible, and where the job will permit, a telescope guard placed over the drill is advisable. Counterweight chains should be maintained in good condition.

3. **The Drill.** Only straight, undamaged drills, properly sharpened to cut to the right size shall be used.

4. **The Chuck.** The chuck shall be tightened securely with the key provided. The key shall not be left in the chuck. Common wrenches or pliers shall not be used on any chuck.

5. **Clamping Work.** The work shall be firmly clamped and a center punch used to score the material before the drilling operation is started. If the work should slip from

the clamp, no attempt shall be made to stop it with the hands. The machine shall be stopped while making any adjustments or repairs.

6. **Personnel Protection**

a. Snug-fitting clothing shall be worn.

b. A cap shall be worn if the operator's hair is long.

c. Gloves shall not be worn while the drill is in operation. If rough material is being worked on, gloves may be used but only while handling material.

d. No one shall reach around a revolving drill.

e. Hands shall never be put under the ram.

f. No one shall pull tripping rods or tamper with safety devices.

7. **Special Tools.** Attachments and special tools provided for the feeding or removal of parts shall be used.

0919. BORING MILLS

The revolving table of a vertical mill should be protected by a sheet metal or pipe-rail guard. The guard should be hinged to permit convenient access for the setting up and adjustment of the job. Work should be securely clamped to the table and no measurement or adjustment should be attempted while the machine is in motion.

0920. METAL SAWS–GENERAL

1. **Protection of Personnel**

a. **Authorized Personnel.** Only authorized employees who are qualified to do so shall operate saws.

b. **Face.** Goggles or face shields shall be worn while using the power saw and while cleaning up afterward.

c. **Hands.** When thick material is to be sawed, the hands shall be placed to the side and to the rear of the material, out of line of travel of the saw.

d. **Reaching.** No one shall reach over a saw to get finished material.

2. **Inspection of Blade.** The blade shall be inspected at frequent intervals and always after it has locked, pinched, or burned. The power shall be shut off and steps taken to ensure its not being turned on again until necessary repairs or adjustments have been made.

3. **Small Pieces.** In machining small pieces, a stick with a notch cut in it shall be used to push the pieces through the saw.

4. **Long Material.** When long material is to be sawed, the end shall be supported by a rack, table, or by a fellow employee.

5. **Overloading Motor.** The saw motor shall not be overloaded by pushing too hard or cutting stock that is too heavy.

0921. CIRCULAR SAWS

1. **Hood.** Circular saws should be equipped with a hood guard which automatically adjusts itself to the thickness of the stock being cut. When tube or bar stock is being cut, the sliding stock guide should be used

2. **Disposal of Scrap.** The part of the saw under the table should be guarded with a complete enclosure which provides for the disposal of scrap metal.

3. **Saw Tables.** Saw tables shall be firmly secured to the deck or floor.

4. **Flying Particles.** A transparent guard placed in front of and over the saw will provide protection against flying particles of metal.

5. **Exposed Blade.** The segment of blade exposed at any time should not be more than 3/8 inch greater than the thickness of the stock being cut.

0922. BAND SAWS

1. **Enclosed Wheels.** The band saw shall have upper and lower wheels completely enclosed with sheet metal or heavy small-mesh screen. The portion of the saw blade between the upper saw guide and the upper saw blade wheel shall be completely enclosed with a sliding fixture attached to the guide.

2. **Access Doors.** Access doors equipped with latches should be provided for changing blades.

3. **Crowding.** Do not crowd or twist a band saw or stand immediately in front of the cut.

4. **Brazed Joints.** To avoid vibration, brazed or welded joints shall be the same thickness as the saw blades.

0923. SHEET METAL WORK

1. **Squaring Shears.** When shears are located in congested areas it may be advisable to erect railings on the exposed sides and at the rear of the machine. Treadles on squaring shears shall be guarded throughout their entire length by fixed guards which leave only sufficient room between guard and treadle for the operator's foot. When shears are equipped with extended back-gages (motor operated) a large convex mirror can be mounted in such a manner as to give the operator a full view of the back of the shears and under the back-gage bar.

2. **Alligator Shears.** Where practicable the moving jaw of an alligator shear shall be enclosed in a heavy mesh guard. The guard can be adjustable for different thicknesses of material. In addition and where practicable, a barrier guard shall be installed in front of the knife. The lower edge of the guard should be low enough to prevent placing the fingers under the knife. A hold-down bar should be provided for use with heavy stock. In crowded areas guard rails should be installed.

3. **Beaders.** Large sheets of metal shall be supported while being beaded.

4. **Hand Brakes and Hand Shears**

a. The metal to be shaped and the hand brake shall be cleaned thoroughly before the operation is started.

b. When beating out the bend in the material, care shall be taken that the hammer does not glance off and cause injury.

c. Care shall be taken while using the shears that the hand is not jammed or pinched.

d. Large sheets of metal shall be supported while being worked on.

e. Rough edges and burrs left on the materials after cutting shall be removed.

0924. RUBBER MAKING MACHINERY

Rolls which require a feed opening large enough to admit large masses of rubber cannot be guarded with a barrier with an opening small enough to keep the hands out. Therefore, the inrunning side of the calendar rolls shall be equipped with horizontal safety trip rods or cables across the front and back faces of the rolls, and vertical tight wire cables near each end of the front and back faces of the rolls. Such safety stops shall be located so that contacts with the body or head of the operator will instantly actuate the stopping mechanism and quickly stop the rolls.

0925. FORMING ROLLS

1. **Guard.** A barrier guard should be placed in front of the intake to give protection against operators being drawn into the forming rolls.

2. **Clearance.** When operating conditions permit, the distance between the guard and the nip point should not be more than three-eighths of an inch.

0926. BUFFERS AND ABRASIVE GRINDING WHEELS–GENERAL

1. **Inspection.** The ring test shall be made on grinding wheels to ensure they are not cracked. Wheels that are chipped, grooved, or worn out of round shall be dressed or replaced prior to using. Fabric buffers that are frayed, pitted, or worn out of round shall be discarded. Wire buffers that are badly worn, frayed, or loosened at the hub shall be discarded.

2. **Personnel Protection**

a. **Shielding Face.** A shatterproof shield preferably of the illuminating type shall be kept in place between the eyes and the work at all times while buffing or grinding. Goggles or face shields shall be worn by the operator.

b. **Standing Aside.** The operator shall stand to one side of the wheel when first applying power.

c. **Protection of Hands.** Care shall be taken that the hands are not drawn into contact with the buffing and grinding wheels.

d. End Guards. All grinders shall be equipped with end guards.

3. Machine Specifications and Use

a. Guards. A guard shall always be used on buffing and grinding wheels.

b. Cleaning. The bearing surfaces of the wheels, flanges, and spindle shall be cleaned so that the clamping pressure will be evenly distributed.

c. Size of Bushing. The hole in the buffer or grinding wheel shall be the proper size for the spindle (neither too small nor too large).

d. Speed. The speed of the spindle shall not run beyond rated speed for the type and size of the buffer or grinding wheel used, nor in excess of manufacturer's specifications.

e. Flanges. Flanges that are recessed and large enough to clamp the wheel well out toward its perimeter shall be used.

f. Washers. Compression washers as large as the flanges shall be used between the flanges and the buffer or grinder. If rubber, use washers 0.125 inch thick; if blotting paper, 0.025 inch thick.

g. Tightening Nuts. Spindle and nuts shall be tightened just enough to keep the buffer or grinding wheel from moving out of position between the flanges.

h. Aligning Buffer. Before the power is turned on, a check shall be made to ascertain that the buffer or wheel runs true and will not strike or rub against any object.

i. Reference. For more details on the care and use of abrasive wheels, see American Standards Association Safety Code, B 7.1.

0927. OPERATING GRINDING WHEELS

1. Position of Hood. Every grinding wheel shall be enclosed in a hood. Tool or work rests shall be mounted on firm supports and be spaced not more than one-eighth of an inch from the surface of the wheel.

2. Clearance. The hood shall be constructed so its periphery can be adjusted to the constantly decreasing diameter of the wheel by means of an adjustable tongue or equivalent. The distance between the wheel periphery and the tongue or end of the periphery band shall be maintained at approximately one-eighth of an inch.

3. Angle of Hood. The upper point of opening in the retaining hood facing the operator shall not be less than 25° nor more than 65° from a vertical line drawn through the spindle center.

4. Swing Frame Machines. The maximum exposure of the wheel periphery or circumference for retaining hood on swing frame grinding machines shall not exceed 180° and the top half of the wheel shall be protected at all times.

5. Stationary Wheels. The maximum exposure of the wheel periphery or circumference on bench or floor stands shall not exceed 90°.

6. Guards

a. Properly Adjusted. Stationary grinding wheels are never to be operated unless protective guards are in their place and the tool rest is correctly adjusted.

b. Replacing with Screen. Portable pneumatic or electric grinding machines using wheels and wire brushes should never be operated without a guard unless shape of job necessitates removal of guard. In this case suitable screens are to be placed around entire job and operators are to wear full protective equipment.

7. Good Condition. Do not use a grinding wheel with a glazed or dull surface or one that is out of balance.

0928. POWER (PUNCH) PRESSES

1. Dangers. The principal source of injuries occurs at the point of operation in the area between the upper and lower dies during such operations as shearing, punching, and forming.

2. Guards. A fixed barrier guard or gate guard at the point of operation shall be provided. If such guards cannot be used, a device which either prevents normal operation of the press until the hands are removed from the point of operation or itself removes the

hands from the point of operation shall be used.

3. **Controls.** Control buttons shall be readily accessible to the operator. They shall be located or guarded so that the press cannot be accidentally started.

FOUNDRIES

0935. HEALTH REQUIREMENTS

1. **New Employees.** New employees should be given a thorough physical examination before starting on a job. Any deficiencies noted should be called to the attention of the supervisor so that suitable work assignments can be made.

2. **Examinations.** All employees engaged in foundry work shall be periodically examined in accordance with regulations in NCPI 792.11-1.

0936. HOUSEKEEPING

1. **Aisles.** Provide adequate aisles and keep them clear.

2. **Safe Piles.** Material shall be placed in safe piles in the scrap yard and shop, in order to reduce the possibility of lifting injuries.

0937. SCRAP YARDS

1. **Personal Protective Equipment.** Workers in scrap yards shall be provided with the following protective equipment:

a. safety spectacles equipped with side shields;

b. serviceable type safety shoes or metal foot guards or toe clips;

c. leather gloves, preferably with steel studs;

d. protective hats;

e. foul weather gear;

f. safety belts and lifelines for use inside gondola cars to prevent falling through when hopper doors are opened.

2. **Operating Precautions**

a. Hooking Material. Workers shall be advised on proper method of lifting and hooking up of material.

b. Authorized Personnel. Only authorized and designated men shall operate a crane.

c. Hand Signals. Personnel shall be advised as to the standard hand signals for crane operation.

d. Safety Tools. Safety wrenches shall be used for opening hopper doors. Safety car movers shall be used instead of pinch bars.

e. Loose Material. Piles of sand, clay, or other loose material shall not be undermined.

f. Portable Belt Conveyors. Operators of portable belt conveyors shall be given full instructions. Other employees shall not be permitted to operate such equipment.

g. Suspended Loads. Employees shall not stand under suspended loads. Magnet cranes are especially dangerous. In no case shall cranemen carry suspended loads over employees.

0938. SAND MILLS, CUTTERS, AND SIFTERS (SCREENS)

1. **Safety Apparel.** Operators shall wear safety spectacles with side shields, safety shoes, and close fitting work clothes.

2. **Inspection.** Persons in charge shall see that all moving or revolving parts and projecting set screws on machines are guarded; that the machine is electrically grounded; and interlocking devices are in proper working condition.

3. **Tagging Switches.** Repairmen shall tag and lock all switches before starting any repairs on machines.

4. **Sand Samples.** A sheet metal cone attached to a stick shall be used at all times for taking sand samples.

5. **Shoveling Sand.** Sand shall not be shoveled out of mills while they are running.

0939. MOLDING AND CORE MAKING

1. **Safety Shoes.** Congress-type safety shoes shall be worn by all personnel.

2. **Protection of Hands and Feet.** Keep feet and hands from under flasks and core boxes.

3. **Screening Sand.** Sand shall be properly screened or magnetically separated to remove nails and other sharp metal.

4. **Gagger Rods and Tools.** Molders and core makers must work with care in handling gagger rods and core wire. Hand tools used for this purpose must be kept in good condition. Each molder shall have a box in which to keep gagger irons, nails, and clamps.

5. **Bracing Cores.** Careful bracing of cores is necessary in large molds as heavy cores may topple over.

6. **Suspended Molds.** Work must never be done underneath molds that are suspended from cranes. Molds must be placed on tripod supports or substantial horses.

7. **Venting Molds.** Molds shall be carefully vented and rammed to prevent explosions.

8. **Lighting Oil Burners.** In lighting oil burners of annealing furnaces and core ovens, the following rules shall be observed:

a. Make sure air or steam valve is closed.

b. Apply lighted torch at fuel inlet.

c. Open oil valve slightly.

d. Turn on air or steam.

9. **Lighting Gas Burners.** In lighting gas burners of annealing furances and core ovens, the following rules shall be observed:

a. Be sure doors are open wide.

b. Make sure all gas is shut off from furnace and that draft damper is open.

c. Apply lighted torch at gas inlet.

d. Turn on gas.

10. **Floors and Aisles.** Employees must know the importance of keeping molding floor clean, and must see that adequate gangways and aisle space are provided to permit access to molds by those carrying ladles.

11. **Spattering.** Sand shall be poured on concrete pavements around pouring floors to reduce spattering of hot metal in case of a spill.

12. **Water on Floor.** Pools of water must not be left on pouring floor. Molten metal will spatter widely if dropped in water.

13. **Cleaning Molds.** Eye protection must be worn when using air in cleaning off molds.

0940. CUPOLAS AND FURNACES

1. **Back Draft.** Gas masks shall be available near the charging area of cupolas in case of high winds creating a back draft.

2. **Personal Protection.** When necessary to work inside a cupola, a circular screen must be suspended inside the cupola to protect the men from falling objects. Protective hats, safety shoes, and goggles shall be worn for this work.

3. **Warning Signs.** Warning signs or crossbars shall be placed at charging doors to indicate that men are working in the cupola.

4. **Loitering.** Men shall not loiter under the charging platforms because of the danger of objects falling from platform and the danger of escaping carbon monoxide.

5. **Eye Protection.** Safety goggles shall be worn at all times by furnace men. Special colored glasses shall be worn when looking into the furnace.

6. **Tapping Out.** Tapping out requires skill and shall be done by experienced men only. The correct method is to bring the bott up immediately over the stream of metal close to the hole at a sharp angle to prevent spattering. An extra supply of botts must be kept on hand.

7. **Tapping Bar.** The back end of the tapping bar shall never be held above the level of the hole, as the bar may puncture the sand bed and cause a run-out through the bottom.

8. **Cleaning Methods.** When cleaning up refuse from behind furnaces, men must look out for persons passing below.

0941. CRUCIBLES

1. Graphite crucibles (plumbago or black lead) shall be used instead of clay, because they withstand higher temperatures and are not so apt to break.

2. Old, worn-out crucibles shall not be ground up for use in manufacturing new crucibles.

3. Extra crucibles that have been used before shall be kept on hand as standbys in case they are needed on short notice.

4. All employees shall be fully instructed on how to handle crucibles to avoid breakage.

5. New crucibles should be bought in excess of actual requirements and stored to allow them to "season." Marking date of manufacture will assist in selecting the older ones first.

6. A number shall be assigned to each crucible and a tally kept of the number of heats taken.

7. Upon receipt, new crucibles shall be examined for cracks and flaws, not only by the eye, but by tapping with a light hammer.

0942. MOISTURE IN CRUCIBLES

1. New crucibles that have become wet must be stored in a place where they will dry out thoroughly for four or five weeks before using. The roof of a continuously operated core oven is a good place for the stowage chamber.

2. Crucibles contain less than one-fourth of one percent of moisture when they come from the kilns, but on cooling and afterwards, they absorb moisture from the air.

3. Crucibles must not be placed on a layer of damp sand or on a cold floor and left for any length of time for they absorb moisture if the temperature falls materially below 250°F.

4. To anneal crucibles, except silicon carbide crucibles, they must be slowly heated to somewhat above 250°F. and allowed to "soak" at this temperature long enough to remove all moisture. If thoroughly annealed, they may then be put into service.

5. Consideration should be given to the size of the crucible, as large ones take a longer "soaking" period to reduce the moisture. In drying out No. 200 crucible, 10 hours or more should be allowed for bringing it up to 250°F. and fully 10 hours more for "soaking."

6. If its dryness is doubtful a crucible must next be heated for some hours to a dull red heat and allowed to cool again, very slowly, to about 250°F. In any case, crucibles must be at 250°F. or over, when they go into the furnace.

0943. PREVENTING CRACKS IN CRUCIBLES

1. Crucibles must not be quickly subjected to high temperature if considerable moisture is present, as the walls may expand and cause ruptures or cracks. The same is true in natural contraction of the drying crucible.

2. Crucibles must be checked for small "pinholes" and "skelping" caused by rapid expansion or contraction. These defects are the chief causes of failure at a critical time during pouring or while crucible is being pulled from the furnace. It may rupture and spill metal on hands or feet.

3. When crucibles are heated with fuel containing too high a percentage of sulphur, or in oil furnaces using too little oil or too much steam, fine cracks (called alligator cracks) often cover the surface of the crucible.

4. Operators must thoroughly understand that when using an oil furnace, an excess of air or steam, or insufficient supply of oil, may cause an oxidizing action.

5. When crucibles are stored on top of furnaces, operators must be sure the furnace covers fit properly. Carelessness may cause

moisture to be given off from the gases when fresh fuel is placed on the fire; the moisture is likely to come in contact with crucibles and cause alligator cracks.

0944. HANDLING CRUCIBLES WITH TONGS

1. Care must be used in handling crucibles with tongs and shanks. Where tilting furnaces are used, as many as 50 heats are possible from a crucible; but if crucibles have to be removed by tongs, they can be used on an average of only 15 heats.

2. Because a crucible is soft and plastic at white heat, it may be squeezed out of shape by the excess pressure of forcing the handles of the tongs together. This will gradually weaken the walls and eventually cause a complete rupture, with serious burns to operators.

3. There are three styles of tongs in general use—one pronged, two pronged, and spade tongs. Tongs must fit perfectly from the widest part of the crucible (usually called the "bilge" or "belly") down to within a few inches of the bottom. Tongs should not extend to the extreme bottom, because of the difficulty in placing the crucible in the shank.

4. Proper use of tongs consists in holding the crucible below the bilge and lifting it so that the least possible pressure is exerted on the crucible walls.

5. One pronged tongs should be used for small crucibles, up to size No. 40. Never use one pronged tongs for large crucibles ranging from No. 200 to No. 300.

6. At least two pairs of tongs shall be provided for each size crucible; one pair may become badly bent or worn.

7. Melters must never drive down the ring of the tongs by using a skimmer or other tool. This practice will cause cracks.

8. Never use improperly fitted tongs. It is important to see that tongs fit the crucible to prevent spillage of metal.

9. Never alter two pronged tongs by cutting off the lower prong even if there is a lack of space in the furnace.

10. A set of cast iron forms shall be used to restore tongs to their proper shape. To restore the tongs to their original form it is only necessary to put them in the furnace, raise them to a red heat, clamp them to the proper iron form, and bring them back into shape by means of a heavy hammer.

11. Crucibles and tongs must be kept free of clinkers, coal, or coke, to prevent forcing foreign material into sides of crucibles when grasped by tongs.

12. The bottom surface (outside) of a crucible must be free of any foreign material to prevent uneven distribution of weight and concentration on projecting spots.

0945. METAL IN CRUCIBLES

1. Ingots must not be thrown into the crucibles in haste as this may cause dents in the sides or bottoms that can eventually develop into cracks or fissures.

2. Ingots must not be crammed into crucibles, because of the danger due to expansion of the metal while heating, which can cause cracks to form.

3. Care must be taken to see that all molten metal is poured from crucible because the cooling of any residual mass will create a strain on the crucible.

0946. CLEANING AND FINISHING ROOMS

1. **Moving Castings.** Castings must not be moved through the foundry by magnetic crane.

a. **Steel Castings.** Workmen shall be instructed as to the proper method of attaching slings or chains on the heads or risers of steel castings.

b. **Iron Castings.** Slings or hooks shall not be attached to the heads of iron castings.

2. **Inspection.** A thorough inspection of casting containers, slings, and hooks shall be made at regular periods.

3. **Crane Signals.** A standard set of signals shall be used to guide the crane operator. Signals shall be given by one man only.

4. **Flogging Floor.** All men working on roughing or flogging floor shall wear eye protection and safety shoes. Shields shall be placed between workmen to stop flying chips and nails.

5. **Sand Removal.** When removing heads and risers by cold-cutting saws, all sand shall be removed from the casting before placing it on the saw table.

6. **Chipping.** Chippers shall be sure to use good chisels and hammers, and to wear eye protection. Chipping should not be done in the open; some method of screening should be provided to prevent flying particles from striking personnel in the area.

7. **Annealer Pits.** Chainmen entering large annealer pits shall wear safety belts with lifelines, and wooden-soled safety-toe shoes.

8. **Welding.** Gas or electric welding shall be done in a segregated area with shields around work to prevent other persons from coming in contact with the injurious rays. Operators shall be equipped with burners' safety goggles for gas welding, and electric welders shall wear the approved shields and in addition both shall wear leather aprons, leather gloves, spats, and safety shoes.

9. **Hydraulic Presses.** Where hydraulic presses are used for straightening steel castings, the press blocks should be grooved to prevent flying out. Operators should place a heavy wire screen between the press and themselves.

10. **Hand Tools.** When possible, all hand tools, including portable pneumatic or electrically driven tools should be returned to the tool room at the end of each day for inspection, electrical test, and for any necessary repairs.

11. **Compressed Air.** Compressed air shall never be blown towards anyone, used for cleaning of personal clothing, or used to cool a person off.

FORGES

0950. PERSONAL PROTECTIVE EQUIPMENT

1. All personnel in the forge shop shall wear safety shoes, leather aprons, and safety spectacles at all times. Personnel working in areas of hazardous noise levels shall wear appropriate hearing protectors (see article 0215). Other special personal protective equipment is prescribed in succeeding articles of this chapter.

2. Persons working at heating ovens shall wear the proper shade number glasses.

0951. TOOLS

1. Turn unsafe tools such as burred flatters, bevelers, shapers, etc., into the tool room for redressing.

2. To prevent tripping hazards, place all tools in proper racks provided to keep them off the floors.

3. Tongs, hammers, files, chisels, and shaping tools should be well dressed, have good handles, and be free from cracks.

4. Material should be adequately screened when doing any chipping by hand or with pneumatic tools.

0952. HAMMERS, SHEARS, PRESSES

1. **Inspection.** Before using hammer, shear, or press, the operator shall see that everything is in good order. If anything is wrong, the supervisor shall be so advised.

2. **Heating Die.** Never operate hammer when dies are cold. Always preheat dies by

inserting hot bar, then closing dies. This method reduces the chances for cracking or breaking dies.

3. **Guards.** Never operate hammer without first adjusting scale guards to proper position.

4. **Changing Die.** In changing dies or making repairs always place a substantial safety prop under the hammer, shear, or punch. (See illustration, "Forging Hammer Safety Props.") In the case of steam or air hammers, be sure the supply valve is tightly closed, and a warning sign placed on the valve.

5. **Repairing Equipment.** In all cases block the treadles to prevent accidental tripping while working on dies or hammers. When repairs have been completed, and before the power has been turned on, remove all tools and loose material. When shimming dies, always place key or steel bar on top of dies, allowing plenty of hand clearance in case the ram accidentally descends. When setting dies make sure that the keys do not project too far beyond the front of ram, as they might cause injury.

6. **Stopping Hammer.** At the end of the shift or when steam hammer is not running, always leave the ram resting on the bottom to prevent accidental tripping or injury to persons passing nearby.

7. **Blowing Lines.** Before adjusting scale-blowing lines (either air or steam), be sure hammer is not in motion, and that ram is properly blocked up.

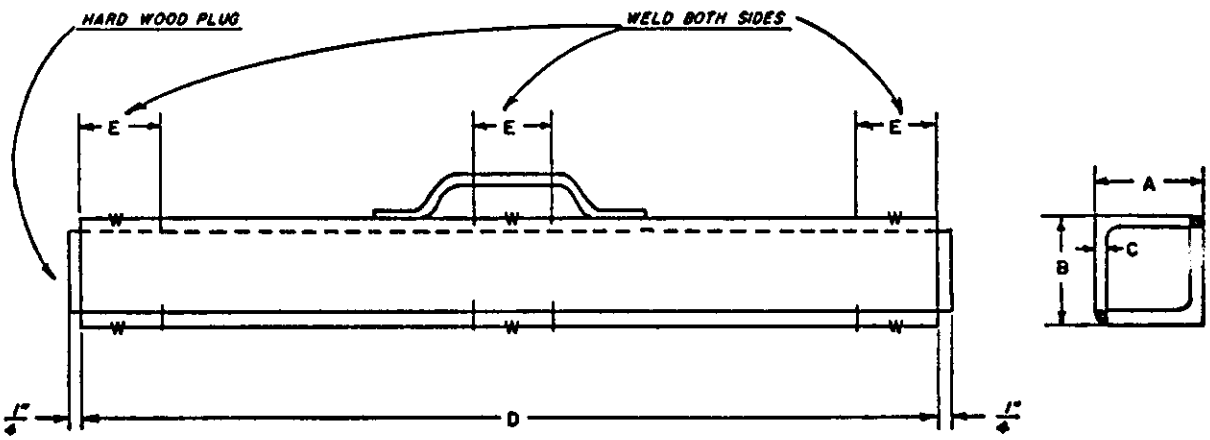

FORGING HAMMER SAFETY PROPS

MATERIAL—ANGLE IRON

Rated hammer blows (lbs.)	Dimension of angle iron (inches)					Actual load on columns (lbs.)	Collapsing load on columns (lbs.)	Present factor of safety
	A	B	C	D	E			
2000	1¾	1¾	¼	35	6	2400	57500	23. 9
3000	1¾	1¾	¼	40	6	3870	50146	12. 95
5000	2	2	⅜	40	8	6080	50146	8. 46
8000	2	2	⅜	45	8	10600	80200	7. 57
12000	2½	2½	⅜	48	10	15000	122500	8. 15
20000	2½	2½	⅜	48	10	24000	122500	5. 15
25000	2½	2½	⅜	48	10	30000	122500	4. 15

Note: Collapsing load determined by using Rankine's formula for short columns.

8. **Swabbing Dies.** In swabbing dies, use swabs which are long enough so the hands do not get under the dies.

9. **Treadle and Flywheel.** Keep all stock, flash, and other material away from treadle mechanism and flywheel guards.

10. **Clogged Die.** If material sticks in the die, it shall be removed with a stick or a soft metal tool, or it shall be reported to the supervisor.

11. **Dangerous Acts**

a. Never put head or hands between dies unless dies are positively blocked up, power shut off, and a warning sign attached to supply valve, switch, or starting lever.

b. Avoid stepping on hot flash.

c. Avoid standing in front of operating hammers unless it is a part of the job.

d. Never stand in front of hammers while they are being propped.

e. When operating shears, never put fingers between gages and shears.

f. Always wear safety spectacles and safety shoes on drop forge and hammer work.

12. **Mufflers.** The exhaust of steam or air hammers shall be provided with mufflers to attenuate the noise or shall be piped out of the working area.

0953. FURNACES–OIL OR GAS

1. **Lighting Furnace.** When lighting furnace, first see that all furnace doors are open. Insert a burning piece of oily waste on a long rod into the furnace. Allow fuel to flow over the waste and ignite. If air is used, turn it on slowly.

2. **Personal Protection.** Always wear safety spectacles or plastic eye shields when lighting furnaces and it is good practice to turn head away to avoid possible flash back. Also see that no one else is in a dangerous position.

3. **Relighting.** Before relighting furnaces, shut off fuel, and wait long enough for gases to escape. In oil furnaces see that draft plates are properly adjusted.

0954. DIPPING MATERIAL

1. **Preheating.** Material, tools, baskets, etc., shall be preheated before being placed in hot oil, cyanide, lead, hardening or drawing salt, etc., in order to prevent an explosion.

2. **Fire Protection.** Oil shall not be allowed to collect on floor.

3. **Carburizing Compound.** Never leave fire burning over night in carburizing packing compound.

4. **Personal Protection.** Cover-all type eye protection similar to rubber acid goggles, as well as aprons and safety shoes, preferably high type, shall be worn when dipping forgings.

0955. POTASSIUM CYANIDE AND SODIUM CYANIDE

1. **Dangers.** Case hardening compounds are deadly poison. Every possible precaution shall be taken to keep persons from getting the compound in their mouths or in breaks on the skin, or from breathing the vapors.

2. **Ventilation.** Adequate ventilation shall be provided for all personnel during exposure to cyanide hazards.

3. **Personal Protection.** Chemical goggles and rubber gloves shall be worn when handling these hardening compounds. Dust respirators will afford adequate protection against inhaling cyanide dusts but approved hydrogen cyanide gas masks should be worn in the presence of vapors or fumes liberated from cyanides in solution.

4. **Contamination of Food.** Food must never be stored, handled, or consumed in the vicinity of cyanide solutions.

5. **Smoking.** Smoking is prohibited while personnel are handling cyanides or when they are in the vicinity of cyanide solutions.

6. **Moisture and Acids.** Cyanide must be kept away from moisture and all acids.

7. **Containers.** Material shall be stored in airtight metal containers and kept in a locked cabinet, box, or drawer. Each container must be labeled as to contents and marked POISON.

8. **Opening Containers.** Cyanide containers shall not be opened except in the building or room where they are to be used. Unopened drums must remain in stores away from all acids.

9. **Stowing.** After removing the cover, cyanide shall be stowed in the original container until used, unless it is impractical to do so.

10. **Removing from Container.** When removing cyanide from a container, use a metal scoop and gloved hands, or dump the container as required.

11. **Breaking Fused Block.** Should cyanide be fused in a solid block in the container, crack it up into smaller pieces by hitting the container with a sledge hammer before opening. Never crack it with cover removed.

12. **Heat Treating Salts.** It is understood that "Perlition Liquid Heat" contains cyanide, and that other heat treating salts, identified by pink color, contain nitrates or nitrites. Attention is directed to the fact that cyanides and nitrates or nitrites react violently when heated together and a disastrous explosion may result. Accordingly, adequate precautions shall be taken to insure that "Perlition Liquid Heat" manufactured by E. F. Houghton Co., is not mixed with other heat treating salts.

0956. TUMBLING BARREL

1. **Cleaning.** A dust respirator, gloves, safety shoes, and dust-tight goggles shall be worn when cleaning out rust and dirt from tumblers.

2. **Wetting Down.** Wetting down of residue in tumbler will assist in preventing a dusty condition.

3. **Rust Disposal.** The rust, etc., shall be placed in a container and moved to outside area for disposal.

4. **Noise Reduction.** Tumbling barrels shall be isolated or acoustically treated so as to reduce noise below hazardous levels.

0957. CRANES

Only one person in each gang shall be assigned the responsibility of giving the signals to crane operators. Manually operated wall or jib cranes must be tended only by experienced personnel.

METALS AND METAL TREATMENTS

0960. TOXIC METALS

Many metals, such as beryllium, cadmium, lead, and zinc, involved in metal working are toxic in varying degrees and any processes whereby the metal is subjected to grinding, turning, heating, etc., which may generate dust particles or fumes should be surveyed for possible hazards. See Chapter 20 for the health hazards of and pertinent precautions for specific metals.

0961. MAGNESIUM ALLOYS

Care should be exercised in the melting and machining of magnesium and its alloys. Suitable fire extinguishers (see article 0206) shall be readily available during such operations. The accumulation of chips and turnings during machining operations should be avoided.

0962. HEAT TREATING

1. **Exposure of Personnel.** All heat-treating equipment shall be operated and maintained to minimize hazardous exposure to carbon monoxide, hydrogen cyanide, lead and its compounds, mercury, sulphuric acid, etc.

2. **Furnaces.** Heat-treating furnaces shall be of approved design.

3. **Poisonous Fumes and Gases**

a. **Salt Pots.** It is essential that no moisture be introduced into a molten salt bath. Salt pots shall be adequately ventilated since they often emit poisonous fumes.

b. **Protective Atmosphere Furnaces.** Manufacturer's instructions on the use of protective atmosphere furnaces shall be carefully studied and followed.

c. **Combustible Gas Pockets.** All types of ovens which are either gas or oil fired, such as core ovens, baking ovens, annealing or ladle ovens, shall be constructed so that all internal parts can be purged of combustible gas pockets before the burners are lighted.

d. **Danger Signs.** During any work involving poisonous fumes and gases, the area shall be placarded with appropriate danger signs, such as "Danger, Poisonous Fumes."

0963. PICKLING

Chemical goggles, rubber gloves, and acid resistant safety footwear shall be worn by men in dipping and pickling rooms.

0964. ELECTROPLATING SHOPS

The following basic rules for safety shall be followed by all personnel connected with electroplating shops:

1. A deluge-type safety shower shall be installed over the center of each work aisle.

2. The ventilation system must be in operation at all times when plating tanks are uncovered.

3. Personnel must wear proper protective clothing, such as acid-resisting gloves and aprons, goggles and face shields, moisture-proof shoes, etc.

4. A rigid system of preventive maintenance of equipment shall be sustained. In particular, scheduled tests of automatic temperature controls must be conducted.

5. Separate storage facilities shall be provided to isolate incompatible plating solutions.

6. Personnel shall not be permitted to lunch within plating shops, and unauthorized personnel shall not be permitted to enter shops.

7. Assigned personnel shall be given physical examinations as prescribed in NCPI 792.11-1.

8. Shop personnel shall have a thorough knowledge of first aid treatment applicable to electroplating operations.

9. Only abrasive or other approved types of anti-skid floor covering shall be utilized.

10. At least two persons should be present at all times when the shop is in operation, and under no conditions should a single person be permitted to enter the shop without the security of a standby watch.

564-350 O - 74 - 14

Chapter 10

WELDING

GENERAL

1001. SCOPE

This chapter shall be used as the safety code for naval activities in the operation of equipment used in welding, cutting, and allied processes. For processes not specifically covered herein, the USA Standard, *Safety in Electric and Gas Welding and Cutting Operations,* Z-49.1, shall be used as a supplementary safety code.

1002. TERMS USED

1. Welder, Welding Operator, or Operator. As used herein these terms are intended to designate any operator of electric or gas welding and cutting equipment (including operators of the equipment when used for heating operations).

2. Hot Work. Hot work is work involving welding, flame cutting, the use of open-flame equipment, or any work involving heating metal to or above a red heat. Riveting and any cold work involving the probability of striking sparks shall be considered as hot work, except when, in the opinion of the supervisor in charge, circumstances do not necessitate such a classification.

1003. LOCATION

1. Where Performed. The convenience of arc and gas welding and cutting lies largely in the fact that the equipment can be taken to the job and the work done in place. This very convenience, however, makes possible construction and repair jobs in confined or remote locations that have not been laid out in the expectation that such concentrated heat or mixtures of noxious or explosive gases would be introduced into that space. Therefore the preparations described in the following paragraphs are essential.

2. Preparation of Location. Welding and cutting operations should be conducted in locations that have been specifically designated for the purpose. Other locations may be used if they have been freed of fire hazards by removal or protection of combustible or explosive materials, liquids, or vapors, and if suitable precautions have been taken against the reaccumulation of such materials. When welding or cutting is to be done in any location other than one specifically designated for such purposes, approval of the job and of precautions to be taken shall be obtained from the supervisor in charge before operations are started.

3. Welding Aloft. If it is necessary for a welding operator to work on platforms, scaffolds, or runways at an elevation of more than 5 feet, provision shall be made to prevent falling. This can be accomplished by the use of railings, safety belts, lifelines, or other safeguards as specified elsewhere herein. Special precautions must be taken prior to using a basket and a crane in the vicinity of radar equipment (see article 1543). Neither the basket nor cable lines should be brought within the beam or within five feet of an operable radar, particularly of the parabolic type. Positive measures must be taken to insure that the radars will not operate with respect to rotation or radiation. Securing of radars by announcement over a sound communication equipment is not adequate. The source of power supply to radars must be disconnected and the switches tagged and those in charge of the operation shall ascertain this has been done.

4. Prohibited Areas. Welding or cutting operations shall not be performed on wooden

piers; nor in or on the outer surface of rooms, compartments, or tanks or in areas adjacent thereto; nor on or in closed drums, tanks, or other containers which hold or have held flammable or explosive materials, liquid, or vapors, unless all fire and explosive hazards have been eliminated according to the applicable procedures specified in articles 1054 and 2070 to 2080.

5. **Fire Watch.** If all fire hazards cannot be removed from the area of welding operations or when any such operations are performed aboard ship, fire watches shall be properly instructed and posted in the vicinity. Fire watches shall be posted on both sides of deck, bulkhead, wall, or ceiling being worked on if heat or sparks exist on both sides. The fire watches shall remain at their stations for at least fifteen minutes after the job is completed to ensure that there are no smoldering fires. Fire-fighting equipment or suitable portable fire extinguishers must be available for use by the fire watches.

1004. HAZARDS

1. **Fire and Explosion.** Personnel performing welding, cutting, or heating operations in small spaces must take the recommended precautions against the ever-present hazard of suffocation or fire and explosion.

2. **Toxic Vapors.** Welding operators must guard against breathing the noxious and sometimes toxic gases which may be formed under certain conditions. Inadequate ventilation while welding may cause illnesses such as metal fume fever or metal poisoning.

3. **Electric Shock.** In electric arc welding, even low voltages may be a potential source of serious shock when certain unfavorable conditions exist. (See Chapter 15.)

4. **Eye Injury.** Eye injuries from the brilliant light of the arc or from heavy gas welding may be very serious.

5. **Body Burns.** Body burns from the arc or from molten metal are a constant danger as are burns from handling hot objects such as wires, tools, and rods.

1005. METAL CONTAINERS AND HOLLOW PARTS

1. **Drums, Structures.** Before welding, cutting, or heating is begun, drums, containers, or any hollow structures which have contained flammable substances shall either be completely filled with water or thoroughly cleaned, ventilated, and tested. Such containers shall be vented to provide for release of any built-up pressure.

2. **Hollow Parts.** Structural voids, jacketed vessels, or castings suspected of being hollow shall be drilled or vented by other means before welding, cutting, brazing, or heating is begun. The absence of flammable materials in such parts shall be ascertained before heat is applied.

3. **Inerting.**

a. **With Gas.** In an apparently clean container there may still be traces of oil or grease under the seams even though the vessel may have been cleaned and flushed with caustic soda solution. The heat of the welding or cutting operation may cause such oil or grease to give off flammable vapors to the extent that an explosive mixture may be formed inside the container. Such mixtures can be prevented from burning or exploding by mixing in a quantity of an inert or nonflammable gas equal to a substantial percentage of the volume of the vapor-air mixture. Carbon dioxide, nitrogen, and helium are suitable for this purpose.

b. **With Steam.** In making emergency repairs and when it is impractical to obtain or use one of the inert gases or to clean and gas-free the spaces, steam may be used in lieu of inert gas to blanket the compartment. However, steam shall *never* be used under any circumstances in spaces containing flammable materials in closed containers, or in magazines or spaces adjoining magazines.

1006. WELDING APPARATUS

1. **Approved Apparatus.** Use only approved apparatus, such as torches, regulators, hose, valves, electric welding machines and accessories, or specialized apparatus that have been examined and tested and

found to be safeguarded in accordance with accepted standards. Helmets, hand shields, goggles, and clothing shall be approved types made of a material which is an insulator for heat and electricity, is not flammable, and is capable of withstanding sterilization.

2. Instruction of Operators. Workmen designated to operate welding or cutting equipment shall have been properly instructed and shall be qualified to operate such equipment.

It is important that electric welding equipment be installed only by competent and experienced personnel in accordance with approved plans. This requirement is especially applicable to the installation of specialized equipment such as acetylene generators, flame hardening outfits, etc., and of primary power lines and outlets intended to supply electric welding machines. All precautions outlined by the manufacturer shall be followed in addition to all procedures set forth in this chapter under gas welding, arc welding, protection of personnel, ventilation of confined spaces, hot work in way of flammable or explosive materials, and entry into closed compartments.

3. Inspection of Apparatus in Confined Spaces. While equipment is in use, especially while operating in confined spaces, it shall be frequently inspected for evidence of leaks in the hose, couplings, valve stems, or other points of the system. If leaks are not promptly detected, an explosive or toxic mixture of gas and air may accumulate with serious results.

4. Blocking Portable Equipment. Before operations are started, heavy portable equipment mounted on wheels shall be securely blocked to prevent accidental movement.

5. Work Suspension. When work in a confined space (except in shop spaces authorized for active stowage of welding equipment) is to be suspended for any substantial period of time, such as during lunch or overnight, the following special precautions must be taken.

a. Arc-Welding Equipment

(1) All electrodes shall be removed from the holders.

(2) All arc welding equipment shall be disconnected from the source of power.

(3) All such equipment, including the electrode holder, shall be positively insulated so that no accidental contacts can be made even if the equipment is moved during this period.

b. Gas Welding Equipment

(1) Gas supply to torch. In order to eliminate the possibility of gas escaping through leaks or improperly closed valves in gas welding or cutting, the torch valves shall be closed and the gas supply to the torch positively shut off at some point outside a confined area.

(2) Removal of torch. The torch and hose shall also be removed from the gas supply during such time. For securing equipment when not in use see article 1026.7.

6. Protection of Equipment. Welding equipment used in the open should be protected from inclement weather. When not in use, the equipment should be stored in a clean, dry place.

1007. FIRE-EXTINGUISHING EQUIPMENT

1. Use of CO_2, Water Lines, and Water Pump Tanks. Suitable fire-extinguishing equipment of approved types shall be maintained near all welding and cutting operations. The suitability of the equipment shall be judged by an analysis of the conditions at the scene of operations. If, for instance, the only combustible material within range of the welding or cutting operations or sparks therefrom is bitumastic waterproofing, a CO_2 extinguisher may be adequate. However, in a small space with a very small access opening, the operator may not be able to get out quickly in case of fire and the use of CO_2 might be injurious to him. Under such conditions the use of water from a 1½-inch water line or water pump tank would be preferable.

2. **Combating Electrical Fires.** If the insulation of some electrical equipment that cannot be removed or adequately protected is the only combustible material present, then a water spray may be more perilous than the fire itself. For combating electrical fires CO_2 should be provided.

3. **Carbon Tetrachloride.** Carbon-tetrachloride extinguishers shall *not* be used. Carbon tetrachloride decomposes on hot metal to form phosgene, a very deadly gas, and may be more dangerous than the fire itself if used inside a closed compartment.

4. **Care of Equipment.** All installed fire-fighting equipment including sprinkler systems located within the compartment where work is to be conducted, and in adjacent compartments shall be maintained in working order at all times when welding or cutting operations are in progress.

PERSONNEL PROTECTION

1010. PROTECTIVE CLOTHING

1. **Clothing Required.** The officer in charge or safety engineer shall determine the appropriate protective clothing required for any welding operation, depending upon the size, nature, and location of the work. See NAVEXOS P-422, *Safety Equipment Manual.*

2. **Gloves.** Welding operators should at all times wear flameproof gauntlet gloves complying with applicable specifications.

3. **Protection from Radiated Heat and Sparks.** Flameproof aprons, jackets, sleeves, and leggings made of leather, asbestos, or other suitable material should be worn as necessary for protection against radiated heat and sparks, particularly during overhead welding.

4. **Alternate Clothing.** If leather clothing is unavailable, woolen clothing is preferable to cotton because it is not so readily ignited and helps protect the operator from changes in temperature. Cotton clothing, if used, should be chemically treated to reduce its flammability. All outer clothing such as jumpers or overalls should be reasonably free from oil or grease. Oilskins shall not be worn by any operator while using welding or cutting equipment.

5. **Rolled Up Sleeves and Pockets.** Sparks may lodge in rolled up sleeves or pockets of clothing or cuffs of overalls or trousers. Sleeves and collars shall be kept buttoned and pockets not protected with flaps shall be eliminated from the front of overalls and aprons. Trousers shall not be turned up on the outside.

6. **Protection of Legs and Feet.** For very heavy work, fire resistant leggings, high boots, or other equivalent protection should be used. The use of low-cut shoes with unprotected tops is not recommended. Safety shoes or boots which do not have exposed nail heads or rivets should be worn.

7. **Head Protectors.** Where there is exposure to sharp or heavy falling objects, hard hats shall be worn. Leather skull caps may be worn under helmets to prevent head burns.

8. **Protection from Electric Shock.** Where electric arc welding under wet conditions is unavoidable, electrician's rubber gloves should be worn instead of leather gloves. Leather protector gloves should be worn over the rubber gloves to protect them from damage by snagging or welding sparks.

1011. EYE PROTECTION

1. **Goggles.** Not only welding and cutting operators, but also other personnel such as helpers, chippers, inspectors, etc., who must remain in the vicinity, shall use suitable helmets, hand-held shields, or goggles during all welding operations, in order to protect their eyes from stray flashes, reflected glare, and flying particles. All lenses in

goggles and helmets shall meet the tests for transmission of radiant energy prescribed in the applicable specifications and shall have the shade of lens specified under paragraph 6 below.

2. **Types of Goggles.** There are two general types of goggles.

a. **Spectacle.** Spectacle type goggles are made both with and without metal side shields. They may have either a rigid nonadjustable or adjustable metallic bridge.

b. **Eyecup.** Eyecup goggles have flexibly connected lens containers shaped to conform to the configuration of the face. A cover type eyecup is designed to be worn over corrective spectacles whereas eyecup goggles are worn alone.

3. **Overhead Welding.** Only the eyecup or cover type goggles should be used when welding or cutting near or above eye level.

4. **Goggles for Gas Welding.** Spectacle type (side shielded) or eyecup or cover type goggles shall be used during all gas welding or cutting operations. Spectacle type goggles without side shields and with suitable filter lenses are permitted for use with gas welding operations on light work and for inspection.

5. **Protection for Electric Arc Welding.** Helmets or hand-held shields shall be used during all arc welding or cutting operations. Spectacle type (side shielded) goggles should also be worn on these operations to provide protection from injurious rays from adjacent work and from flying objects.

6. **Shade of Lenses.** The object of tinted filter lenses is not only to diminish the intensity of visible light to a point where glare is reduced to a minimum so that the welding zone can be readily seen, but also to protect the welder from harmful infrared and ultraviolet radiation from the arc or flame. The following list shall be used for guidance in selecting goggles:

Type of Welding	*Shade of Lens*
Stray light from welding and cutting. Metal pouring and furnace work.	1.7–4
Light gas cutting and welding. Light electric spot welding.	5
Gas cutting, medium gas welding, and arc welding up to 30 amperes.	6–7
Heavy gas welding and arc welding and cutting up to 75 amperes.	8–9
Arc welding and cutting up to 200 amperes.	10–11
Arc welding and cutting up to 400 amperes.	12–13
Arc welding above 400 amperes.	14

7. **Transferring Equipment.** Helmets and goggles should not be transferred from one person to another without antiseptic cleaning.

8. **Welding Bays Painted Black.** Where welding with the electric arc is regularly carried on, the walls of the welding bay shall be painted flat black or other nonreflecting color to prevent flickering reflections, or the work should be enclosed in a booth.

9. **Portable Booths.** Where the work permits, workers or other persons adjacent to the welding areas shall be protected from the rays by enclosing the work area with flameproof screens or individual booths which have been painted with a nonreflecting color, such as zinc oxide and lamp black.

10. **Treatment of Arc Burned Eyes.** In case of minor eye burns the eye will not be permanently injured, but the pain may be intense for as long as 24 to 48 hours. Obtain medical treatment promptly if arc burn is felt or suspected.

1012. RESPIRATORY PROTECTION

1. **Lead and Cadmium Paints and Alloys.** Welders engaged in the welding, cutting, or heating of lead, lead bearing steel, cadmium

or lead bearing paint, or low melting lead alloys must wear an air-line respirator. When conditions do not permit the use of an air-line respirator, a filter type respirator equipped with fume filter pads may be worn, along with adequate ventilation, for short intermittent periods of work only.

2. Zinc Metals. When welding, burning, or heating zinc-bearing base or filler metals or metals coated with zinc-bearing materials, adequate exhaust ventilation must be provided and a filter type respirator equipped with fume filters shall be used by employees performing hot work and also by others in the vicinity. The ventilation system should exhaust to the outside atmosphere.

3. Rubber and Plastic Coated Materials. Filter type respirators shall be required for welding, burning, or heating operations on metals coated or backed by synthetic rubber, saran, vinyl plastic, polyurethane foam-in-place plastics, bitumastic paints, and preservatives.

4. Scheduled Operations. Welding, burning and heating operations, especially those emitting hazardous fumes, should be scheduled so as not to interfere with other trades working in the area. When conditions do not permit this, adequate ventilation must be provided and other employees exposed to hazardous fumes shall be protected with the same respiratory equipment as welders and burners. Supervisors shall make frequent inspections to ensure that this measure is strictly enforced.

5. Welding Inside Closed Containers. Where welding operations are carried on inside tanks or other closed containers, air-line respirators or hose masks should be furnished the men so employed. A workman shall be stationed on the outside to service the power, gas, and ventilation lines to ensure the safety of those working within. The attendant shall observe the welding operator at all times and in case of emergency shall immediately shut off the gas or electric current and render such other help as the occasion warrants. A filter type respirator may be used only for short periods of time.

a. Safety Belts and Lifelines. Where a welding operator must enter a confined space through a manhole or other small opening, means shall be provided for quickly removing him in case of emergency. Safety belts and life-lines used for this purpose shall be so attached to the operator's body that the body cannot be jammed in a small exit opening.

b. Communication. When men are in tanks and other such spaces, even after such spaces have been cleaned and found *SAFE*, a reliable man shall stand outside at the manhole and keep count of the men in the space and communicate with them every few minutes to be sure that no one has been overcome by toxic gases.

1013. WARNING ABOUT HOT METAL

After welding operations are completed, the welder shall mark the hot metal or provide some other means of warning other workers.

GAS WELDING

1020. CYLINDERS

Following are a few special precautions concerning cylinders in actual use in welding or cutting or in *active stowage* (ready service). For more complete and detailed precautions for the handling and stowage of fuel gas and oxygen cylinders refer to the section on compressed gases in Chapter 20.

1. Call by Proper Names

a. Fuel Gases. Fuel gases should be called acetylene, hydrogen, etc., and not by the word "gas", which is a general term including oxygen, etc.

b. Oxygen. Oxygen should be called by its proper name—not, for example, by the word "air".

2. Mixing Fuel Gases and Air or Oxygen. Mixtures of combustible gases and air are very explosive and shall be carefully guarded against. No device or attachment facilitating or permitting mixture of air or oxygen with combustible gases prior to consumption, except at the burner or in a standard torch or blow pipe, shall be allowed unless approved for the purpose.

3. Assigned Locations. Keep all cylinders in definitely assigned locations:

a. well ventilated and away from corrosive chemicals and fumes;

b. away from radiator or other source of heat or fire; in summer, away from direct rays of the sun;

c. away from elevators, stairs, or gangways;

d. free from danger of being knocked over or damaged by heavy objects passing or falling;

e. where they cannot form part of an electric circuit;

f. away from combustible material, especially grease and oil;

g. far enough away from the actual welding or cutting operations so that sparks, hot slag, or flame will not reach them.

4. Securely Fastened. Cylinders in use or in stores or cargo shall be securely fastened to prevent shifting or falling under any weather conditions.

5. Confined Spaces. When welding or cutting is being performed in any confined space with difficult means of exit, the gas cylinders and heavy welding or cutting equipment shall be left on the outside.

6. Protection From Ice. Cylinders in the open should have valves and safety devices protected against accumulations of ice and snow. Warm (not hot) water shall be used to thaw ice in cylinder valve outlets.

7. Excessive Heat. In summer, cylinders in the open shall be screened from the direct rays of the sun to protect against excessive temperature rises. (The maximum temperature to which cylinders should be subjected is 130° F. Higher temperatures may cause dangerous pressure increases.)

1021. FUEL-GAS CYLINDERS

1. Vertical Position. Acetylene and liquified fuel-gas cylinders shall be placed with valve-end up whenever they are used. They should also be stowed in this position and not allowed to lie on their sides. If horizontal stowage is necessary, cylinders must be in vertical position 2 hours before using. Otherwise acetone in which the acetylene is dissolved will be drawn out with the gas.

2. Leaking Cylinders. If a leak develops at the fusible plug or elsewhere on a cylinder, the cylinder shall be removed well away from any source of ignition, the cylinder valve slightly opened, and the fuel gas allowed to escape slowly. A warning shall be placed near this cylinder not to approach it with a lighted cigarette or other source of ignition. Such a cylinder shall be plainly tagged as defective and in need of repair before refilling.

3. Protection of Safety Plug. When cylinders are in use, nothing shall be placed on top of an acetylene cylinder which may damage the safety plug or interfere with the quick closing of the valve.

4. Pressure of Acetylene. Under no conditions shall acetylene be generated or used at a pressure in excess of 15 pounds p.s.i. gage pressure. This requirement is not intended to apply to the storage of acetylene dissolved in a suitable solvent (such as acetone) in cylinders manufactured according to Interstate Commerce Commission requirements and to applicable specifications.

5. Liquid Acetylene. The use of liquid acetylene in welding is prohibited.

1022. OXYGEN CYLINDERS

1. Keep Away from Oil and Grease. Keep oxygen cylinders and fittings away from oil and grease, which in the presence of oxygen under pressure, may burst into flame. A jet of oxygen shall never be permitted to strike

an oily surface or greasy clothes, or to enter a fuel oil tank or other compartment that has contained a flammable substance. Every possible precaution shall be taken to prevent oily and greasy substances from coming in contact with cylinders and cylinder valves. Do not handle oxygen cylinders, valves, regulators, hose (oil or grease deteriorates rubber), and other apparatus or fittings with oily hands, gloves, or greasy materials. Cylinders shall never be stowed or used where oil or grease from machinery or overhead cranes or belts can splash or fall upon them. Oxygen will not burn, but it supports and accelerates combustion and will cause oil and other flammable materials to burn more easily and with greater intensity.

2. **Keep Away from Combustibles.** Do not store oxygen cylinders near highly combustible material, especially oil and grease; or near reserve stocks of acetylene or other fuel gas cylinders; or near any other substance likely to cause or accelerate fire.

3. **Not a Substitute for Compressed Air.** A serious accident may easily result if oxygen is used as a substitute for compressed air. Never use oxygen in pneumatic tools, in oil preheating burners, to start internal combustion engines, to blow out pipe lines, to "dust" clothing or work, to create pressure, or for ventilation.

1023. CYLINDER VALVES

1. **Protection Cap.** Valve protection caps are designed to protect valves from damage. Before raising cylinders from a horizontal to a vertical position, the cap should be properly in place, should be turned clockwise to see that it is hand-tight, and then the cylinder should be raised by grasping the cap. Hooks or line through valve protection caps shall not be used for lifting cylinders from one vertical position to another. Bars shall not be used under cylinders and particularly not under valves or valve-protection caps to pry cylinders loose. When frozen to the ground or deck the use of warm (not boiling) water is recommended. Valve-protection caps shall always be in place except when cylinders are in use or connected for use.

2. **Open Valves Slowly.** Cylinder valves shall always be opened slowly.

3. **Never Repair Valves.** Never tamper with nor attempt to repair cylinder valves. If trouble is experienced, indicate on a "defective" tag the nature of the trouble and return the cylinder to the supplier.

4. **Do Not Force Valves.** Do not use a hammer or a wrench to open cylinder valves. If valves cannot be opened by hand, tag them as defective and in need of repairs before recharging.

5. **When the Oxygen Cylinder Is in Use.** The valve should be opened at least one full turn, preferably all the way, to prevent leakage around the valve stem. Avoid complete removal of stem from a diaphragm type valve (it might be lost or dirt might enter the mechanism).

6. **Opening Acetylene Valves.** An acetylene cylinder valve open ¼ to ½ turn will permit an adequate flow of gas; and in order that the valve may be turned off quickly in case of emergency, it should not be opened more than 1½ turns.

7. **Keeping Wrench Available.** Where a special wrench is required it shall be left in position on the stem of the valve while the cylinder is in use so that fuel gas can be quickly turned off in case of emergency. In the case of manifolded or coupled cylinders, at least one such wrench shall always be available for immediate use.

8. **Closing Valves.** Valves shall be closed under the following conditions:
   a. before moving cylinders;
   b. when work is finished;
   c. when cylinders are *empty*.

9. **Leaking Around Valve Stem.** If there is a leak around the valve stem when a fuel gas cylinder is opened, the valve should be closed and the gland nut tightened. If this does not stop the leak, the use of the cylinder should be discontinued. The cylinder shall be plainly tagged as defective and in need of repairs before using or recharging. If the need to use the cylinder is very urgent,

the leak can probably be stopped by opening the valve all the way; but this should be done only when emergency conditions requiring quick closing of the cylinder valve are not likely to occur.

10. Leaks in Piping. Tests for leaks of any piping system or apparatus shall be made with soapy water. Use grease-free soap. NEVER EMPLOY FLAMES TO DETECT LEAKS.

1024. REGULATORS

1. Pressure-Reducing Regulator. Cylinders shall not be used without first attaching an approved pressure-reducing regulator to the cylinder valve or to a manifold.

2. Cracking Cylinder. Before connecting the regulator to the cylinder valve, the valve shall be opened one quarter of a turn and closed immediately. This action is generally termed "cracking" and will clear the valve of dust or dirt that otherwise might enter the regulator. Always stand to one side of the outlet when opening the valve. Never "crack" a fuel gas cylinder near other welding work or near sparks, flame, or other possible sources of ignition. Be sure the regulator is closed (the adjusting screw backed out until loose) before opening the cylinder valve.

3. Connecting Regulator. When a regulator is attached, open the cylinder valve slightly at first so that the regulator cylinder-pressure gage hand moves up slowly. If the pressure is suddenly released, it is likely to damage the regulator and pressure gages.

4. Right- and Left-Handed Threads. Threads on oxygen regulator outlets, hose couplings, and torch valve inlets are right-handed, and those for acetylene are left-handed. Threads on acetylene cylinder valve outlets are right-handed, but of different pitch from oxygen cylinder valve outlets. If threads do not match, the connections are mixed. Do not attempt to force unmatching or crossed threads.

5. Acetylene Valve Outlet. When setting up cylinders for use, the acetylene valve outlet should be pointed away from the oxygen cylinder.

6. Personnel in Front of Pressure Gage. When valves are opened no one should be allowed to stand in front of the pressure gages.

7. Metal Tools. Metal tools (even the so-called sparkless type) for making repairs shall be used with caution to avoid striking a spark. Such a spark may cause ignition if a mixture of gas and air is present.

8. Modification of Regulators Prohibited. Regulators or automatic pressure-reducing valves shall be used only at the pressures and for the gas for which they are intended. Do not experiment with regulators or modify them in any way.

9. Testing Gages on Regulators. Working on low pressure gages attached to regulators should be periodically tested to ensure their accuracy. Do not test oxygen gages with oil.

10. Faulty Threads or Nuts. Union nuts and connections on regulators should be inspected before use to detect faulty or dirty threads or seats which may cause leakage of gas when the regulators are attached to the cylinder valves. When damaged nuts or connections are found, they shall be removed from service. Dirty threads or seats shall be cleaned.

11. Clear Working Space. Keep a clear space between the cylinders and the work so that the cylinder valves can be reached easily and quickly if necessary.

12. Low Pressure Within Cylinder. The use of any cylinder shall be discontinued before the pressure falls to zero. Oxygen cylinders, particularly, shall not be used in welding or cutting operations, except in an emergency, after the gage pressure falls below approximately 25 p.s.i. Cylinder valves shall then be securely closed and valve protecting caps replaced. These practices prevent moisture, other gases, etc., from contaminating the cylinder before it is refilled. Such cylinders shall be tagged or marked "empty" or "MT". Empty cylinders shall be segregated from full cylinders, but shall be

stowed in the same compartments (or on deck) and otherwise handled with the same precautions specified for full cylinders.

13. **Removal.** Before a regulator is removed from a cylinder valve, the cylinder valve shall always be closed and the gas released from the regulator.

1025. PORTABLE MANIFOLDS

When it is necessary to discharge fuel gas or oxygen simultaneously from several cylinders in order to provide sufficient volume for heavy work on several concurrent jobs, a portable manifold (sometimes called a coupler block) may be used to connect the cylinders to a single regulator or to a single header having several outlets with individual regulators. Portable manifolds shall be of substantial design and capable of safely withstanding any pressure to which they may be subjected in operation.

1. **Copper with Acetylene.** "Pure" copper, or copper alloys containing 67 to 99 percent copper, shall NOT be used in piping or fittings for handling acetylene (except blowpipe or torch tips). Acetylene reacts with pure or slightly alloyed copper to form cuprous acetylide, a violent explosive.

2. **Flash Arresters.** When several fuel gas cylinders are manifolded, approved flash arresters shall be installed between each cylinder and the manifold. For outdoor use only and where the number of cylinders manifolded does not exceed three, one flash arrester installed between manifold and regulator is acceptable.

3. **Back-Flow Valve.** Each cylinder lead should be provided with a back-flow valve.

4. **Capacity.** The aggregate capacity of manifolded fuel gas cylinders shall not exceed approximately 2,000 cubic feet of gas.

1026. THE TORCH

1. **General.** The following precautions, including procedure for lighting, adjusting, and extinguishing torch flames, shall be carefully followed. Closed and poorly ventilated compartments shall be inspected and approved by an authorized person prior to conducting any hot work. Special precautions indicated by the manufacturer of any apparatus shall also be carefully carried out.

2. **Tip or Nozzle Pressure.** Always use the proper tip or nozzle, and operate it at the correct pressure for the particular work involved. This information should be taken from tables or work sheets supplied with the equipment.

3. **Suitable Source of Ignition.** Do not use matches for lighting torches or serious hand burn may result. Use friction (spark) lighters, stationary pilot flames, or some other suitable source of ignition.

4. **Lighting Torch.** When lighting the torch, open the acetylene valve first and ignite the gas while the oxygen valve is still closed. Do not allow the unburned acetylene to escape into small or closed compartments.

5. **Lighting Torch in Confined Space.** Do *not* attempt to light torches from hot metal. An explosive mixture of acetylene and oxygen can accumulate quickly and may cause damage or personal injury if ignited. Do *not* allow such a mixture to accumulate. Particularly, do not be slow to light a torch, especially a large one for heavy work. A stationary pilot flame, such as a candle, shall be used in lieu of a spark lighter in a confined space.

6. **Extinguishing Torch.** When extinguishing the torch, close the acetylene valve first, then close the oxygen valve.

7. **Securing Equipment When Not in Use.** When welding or cutting is stopped and will not be resumed within 15 minutes, or when the operator leaves the scene for any period of time, the equipment shall be secured as follows:

a. Extinguish the torch as in (6) above.

b. Close both acetylene and oxygen cylinder valves. (Leave regulators open momentarily.)

c. Open acetylene valve on torch and allow gas in hose to escape (5-15 seconds)

to outside atmosphere, NOT into small or closed compartment. Close valve.

d. Open oxygen valve on torch and allow gas in hose to escape (5-10 seconds). Close valve.

e. Close both regulators. (Note—oxygen and acetylene regulators are closed when adjusting screws are backed out until loose.)

8. Regulators and Valves Clear of Hose. Do not hang a torch by its hose on regulators or cylinder valves. Make certain that the torch is not burning when not in use and that the valves are closed tightly.

9. Valves Tightly Closed. If, after equipment has been in use, it is to be stowed for a considerable period before being used again, it shall be inspected carefully to determine that cylinder and torch valves are firmly closed, regulators are closed (adjusting screws released), and all hose connections are tight. If stowed thus, it is not likely to create any explosion hazards in the compartment in which stowed, and it can be put back into use at any moment.

10. To Prevent Backfiring. If equipment has been stowed with torch valves open or loosely closed or with hose connections loose, or if hoses and torch are being newly connected prior to use, or if either of the cylinders has just been changed, there is danger of backfiring unless all connections are made tight and the system "purged" of air as follows before the torch is lighted.

11. Purging System of Air. Be sure torch valves are firmly closed; then open cylinder valves slowly. Open regulators slightly. Open torch acetylene valve and allow unlighted gas to escape to the outside atmosphere, *not* into a small or confined space. Allow gas to flow for 5 to 15 seconds, depending on length of hose, until all air, or mixture of gas and air, has been forced out of the system. Then close the torch acetylene valve. Repeat the procedure on the oxygen side of the system. Then proceed with lighting the torch as above.

12. Uncapped Openings. When combustible-gas lines or other parts of equipment are being purged of air or gas, lights or other sources of ignition shall not be permitted near uncapped openings.

1027. HOSE

1. Color. Red is the generally recognized color for acetylene hose, and green or black for oxygen hose.

2. Twin Hose Lines. A single hose with two or more gas passages, in which a wall failure might permit the flow of gas from one passage into the other, or permit the mixing of gases in the hose, is not permitted. Twin hose lines made especially for oxyacetylene operations are permissible when they are substantially two hoses, held together by webbing or other means, and so constructed that gas from one hose line cannot possibly leak into the other. When parallel lengths of oxygen and acetylene hose are taped together for convenience and to prevent tangling, not more than 4 inches out of each 8 should be covered with tape, otherwise it is difficult to locate leaks and identify hose.

3. Metal Clad Hose. Metal clad or armored hose is not recommended.

4. Worn Spots. Hose shall be frequently inspected for worn spots or defective connections and defective hose shall be repaired or removed from service.

1028. WELDING ON SHIPBOARD

1. Responsibility of Commanding Officer. When oxygen and acetylene or other fuel gases are to be used aboard ship, the cylinders would normally be placed as close as possible to the work. However, in construction, repair, overhaul, or conversion jobs conducted in shipyards, bases, or alongside repair ships, it becomes necessary to decide whether to allow the cylinders and outlet headers inside the ship or to keep them outside. Decision shall rest with the commanding officer and shall be based on an analysis of which set of hazards—that is, taking equipment inside or leaving it outside the ship—can be more readily safeguarded. In either event, before hot work is done in way

of flammable or explosive materials and before there is any entry into closed or poorly ventilated spaces, the commanding officer shall see that careful preparations are made as prescribed in articles 2070 to 2080.

2. Cylinders Inside the Ship

a. Fire. If cylinders are located inside a ship in many compartments from which they cannot be removed quickly, they may become involved in a fire. There is little danger of the cylinders themselves exploding, but the heat and pressure may open the cylinder safety devices and release the gases. Escaping fuel gases may become ignited and the flaming cylinder will add to the fire; or unburned fuel gas escaping into a confined space may form an explosive mixture before it is ignited; or escaping oxygen may cause a small fire to burn more fiercely.

b. Handling Cylinders. When cylinders are manhandled through doors and hatches and up and down ladders, special care must be taken to prevent injury to personnel or damage to the cylinders, which may cause an accident. On ships under construction, however, when decks are not in place, rapid and safe handling of cylinders by cranes is practicable.

3. Cylinders Outside the Ship. On the other hand, keeping the cylinders, outlet headers, etc., outside of ship, on the weather deck, the ways, or the deck, exchanges one set of hazards for another, such as:

a. High Pressure. Higher gas pressures and additional couplings required for longer hose lines increase the danger of gas leaks into the ship.

b. Cutting Hose. Hoses strung out along decks and through doors and hatches are in danger of being damaged or cut and thus flammable or toxic gases or oxygen-gas mixtures may be released into the ship.

1029. STRINGING HOSE

Whenever cylinders, portable outlet headers, or service piping outlets are left in a shop aboard ship, or on the weather deck, the dock, or some other point remote from the scene of work, and hose lines are strung out for long distances to the work, the procedure below shall be followed:

1. Connecting Apparatus. Connect regulators, hose, and torch as outlined in 1023 through 1027.

2. Trial Lighting of Torch. Light torch and adjust regulators for proper pressures. Extinguish torch, leaving supply valves and regulators open temporarily.

3. Inspection for Leaks. Inspect all connections for leaks, especially torch valve and hose connections that will go inside the ship.

4. Close Supply Valves. If no evidence of leaks is found, close the cylinder or other supply valves just behind the regulators. Leave the regulators open at proper adjustments.

5. Protecting Hose. String the hose, with torch attached, to the location of the work. If several hoses are strung through the ship, or if the work will take several hours or days, provision should be made to suspend the hoses off the deck to minimize the danger of damage and to eliminate a tripping hazard. Take all practicable precautions to ensure that doors and hatch covers are securely held open to preclude cutting of the hose by an accidentally closed door or hatch cover, and to guard the hose from damage by traffic in its vicinity.

6. Opening and Closing Supply Valves. An assistant should be assigned to maintain contact with the operator. He should be stationed where he can close the valves quickly in case of an emergency, and reopen the supply valves when directed by the operator. The work may then proceed.

a. Securing Torch. If assignment of a helper is not practicable, and it is necessary to adjust supply valves, the operator shall *secure the torch* where it is not likely to be disturbed—asking a shipmate or fellow worker to watch it. The operator shall be sure that torch valves are firmly closed before leaving equipment to reopen the supply valves. *He shall return immediately to the torch.*

b. **Inspection of Hose.** On each trip the operator shall follow the hoses and inspect them for damage.

c. **Relighted Torch.** If, on his return, the operator detects no odor of acetylene or other indication of danger in the compartment, he may then light the torch and proceed with work.

7. **Leaving Equipment Unattended.** When leaving equipment unattended for even a relatively short period such as meal time, directions for securing welding equipment shall be carefully followed (see article 1026.7).

8. **Care of Equipment After Using.** Upon completion of work, extinguish the torch and direct the helper to *close the supply valves;* or the operator shall *immediately* do it himself. The torch and hose shall *immediately* be removed from the compartment to the outside or stowed with the cylinders in their assigned locations.

ELECTRIC ARC WELDING

1035. PROTECTION FROM SHOCK

1. **Working Alone.** Whenever it can be avoided, a welding operator should not work alone in a compartment. Immediate care of an operator who has received an electric shock may prevent serious consequences.

2. **Care of Equipment.** Welding equipment should be maintained in good mechanical and electrical condition to avoid unnecessary hazards. Commutators should be kept clean to prevent excessive flashing.

3. **Voltage.** All personnel must keep constantly in mind that any electric power circuit, whether AC or DC, high or low voltage, is a potential source of danger. It is important to observe every precaution to prevent shock. Although the voltages required for arc welding are low, they are enough to be a potential source of serious shock under favorable conditions.

4. **Dangers from Low Voltage.** One of the principal dangers from low voltage welding circuits is the totally unfounded assumption that they can be handled with impunity. The only way to be safe is to handle any electric circuit with extreme caution. The reference to "any electric circuit" is particularly emphasized because the welding operator not only handles the welding circuit, but he also may handle portable lights, portable motor-driven tools, and in many instances he may handle switches or portable cable on the side of the arc welding machine connected to the power source.

5. **Keeping Body Insulated.** The danger of shock is particularly marked when the operator is sweaty or wet. The operator should develop the habit of always keeping his body insulated from both the work and the metal electrode and holder. It should never be assumed that because contact at one time is not harmful, similar contacts at other times will be similarly harmless. Changes that are not noticeable can take place which could change the effects of contact.

6. **Wooden Mats Used for Insulation.** Whenever it is practicable, the operator should stand on dry wooden mats or similar insulating material rather than on grounded metal structure.

1036. ELECTRODE HOLDERS

1. **Safe Capacity.** Only electrode holders which are fully insulated and in good condition shall be used. They shall have been specifically designed for arc welding and of a capacity capable of safely handling the maximum rated current required by the electrodes with which the holder is intended to be used.

2. **Insulation.** Any current-carrying parts passing through the portion of the holder which the operator grips in his hand shall be fully insulated with nonconducting material

capable of safely insulating against the maximum voltage encountered to ground. Electrode holders with all metallic or current-carrying parts fully insulated (including the jaws gripping the electrodes) are recognized as affording superior protection to the operator. Such holders are available in stock and shall be used whenever possible.

3. **Gloves.** Always wear gloves when handling energized holders, cables, or machines and when removing or replacing electrodes. The gloves should be dry and in good condition.

4. **Dipping in Water.** Do not dip hot electrode holders in water because this would expose the operator to the chance of receiving an electric shock.

5. **Energized Holder.** Do not put an energized electrode holder under the arm at any time. When the energized electrode holder is not in use, the operator should place it where it will not be contacted by other personnel. If an insulated surface or insulated holding peg is not available, remove the electrode and lay the insulated holder on the deck or other adjacent object.

6. **Damp Clothing; Bare Skin.** Never permit the metal part of an electrode holder to touch either the bare skin or any damp clothing which the operator may be wearing. This is almost certain to result in fatal shock.

1037. CABLE AND COUPLINGS

1. **Type.** Only approved welding cables of the completely insulated flexible type conforming to specification MIL-C-915 shall be used. They shall be capable of handling the maximum current requirements of the work in progress, taking into account the duty cycle under which the welding operator is working. No splices shall be permitted within a distance of 10 feet from the electrode holder.

2. **Connectors and Couplings.** When it becomes necessary to connect lengths of cable, substantial insulated connectors of a capacity at least equivalent to that of the cable shall be used. Fully insulated "rapid couplings" are carried in standard stock and should be used whenever possible. If connections are effected by means of cable lugs, the lugs shall be soldered to the cable and securely fastened together to give good electrical contact. The exposed metal parts of the lugs, and the means used to fasten them together, shall be completely covered with rubber tape and protected with friction tape or equivalent protective covering. If any part of the connection is left bare, accidental contact with a metallic structure may cause sparks, arcs, and fires.

3. **Inspection.** Cables should be inspected once a month to see that they are in good condition.

4. **Bare Conductors.** When a cable (either work lead or electrode lead) becomes worn, exposing bare conductors, the exposed portion shall be protected by means of rubber and friction tapes or equivalent protection.

5. **Keep Cables Dry and Free of Oil.** Welding cables should be kept dry where practicable, and free from grease and oil, to prevent premature breakdown of the insulation.

6. **Transporting Cables.** When it becomes necessary to carry cables some distance from the machines, they should be substantially supported overhead, if practicable. If this cannot be done, and cables are laid on floor or ground, they should be protected in such a manner that they will not incur damage or interfere with safe passage of personnel. Special care should be taken to see that welding supply cables are not in proximity to power supply cables or high-tension wires.

7. **Looping Cable Over Shoulder.** Do not loop the welding cable over the shoulder (particularly over the shoulder opposite the hand holding the electrode holder). There is no shock hazard in this practice as long as the cable has no breaks, but operators have been dragged off staging or scaffolds when the cables were fouled by cranes, etc.

8. **Separation of Cables.** When using portable machines, care should be taken to

see that the power supply cables are separately laid and do not become entangled with welding supply cable.

1038. GROUND RETURNS

1. Frame Grounded. Before starting operations, the operator shall make certain that the welding machine frame is grounded, that neither terminal of the welding generator is bonded to the frame of the welding machines, and that all electrical connections are securely made. The ground connection should be attached firmly to the work, not merely laid loosely upon it.

2. Use of Structure or Pipe Line. Ground returns from the work to the machine should be made with a cable wherever practicable. However, under some operating conditions it may be necessary to utilize a structure or pipe line for the ground return. When such a structure is employed precautions against the creation of unsafe conditions must be taken.

3. Flammable Liquid Pipe Lines. Pipe lines carrying gases or flammable liquids shall not be used for a ground return circuit.

4. Contact at Joints. When a structure or pipe line is used as a ground return circuit, it shall be checked to ascertain whether proper electrical contact exists at all joints. A condition of sparking or heating at any point should cause the rejection of the structure as a ground circuit, particularly if flammable vapors or gases may be present.

5. Avoid Current Through Bearings. Ground connection must be made in front of any bearings or similar joints in a structure or machine. Welding current going to ground through a bearing will almost invariably cause sparking and heating which will pit and ruin ball and roller bearings or other polished surfaces.

6. Joints Bonded and Inspected. Where a structure or pipe line is continuously employed as a ground return circuit, all joints shall be bonded and appropriate periodic inspection shall be conducted to ascertain that no condition of electrolysis or fire hazard exists as a result of such use.

7. Inspection. All ground connections shall be checked to determine that they are mechanically strong and electrically adequate for the required current.

1039. INERT-GAS METAL-ARC WELDING

The hazards related to inert-gas metal-arc welding processes are brought about principally by the generation of exceptionally high intensity of radiant energy as compared to ordinary shielded metal-arc welding. The inert gas shield around the arc combined with the higher current densities required results in an ultraviolet radiation intensity 5 to 35 times greater and 1½ times more infrared radiation. Such high intensities, particularly of ultraviolet radiation, introduce more severe problems with respect to eye and skin protection and to the conversion of oxygen to ozone, nitrogen to its oxides, carbon dioxide to carbon monoxide, and chlorinated solvents to irritating and toxic decomposition products. With the exception of chlorinated solvents, these by-products are not considered to be a problem under unconfined welding conditions with good natural ventilation. The requirements for control of toxic flux and metal fumes are not considered to be substantially different from those of any other welding process; appropriate precautions are equally applicable. The following precautions are particularly applicable to inert-gas metal-arc welding.

1. Chlorinated Solvents. Radiation from the arc causes instantaneous decomposition of chlorinated solvents, such as perchloroethylene, trichloroethylene, and methyl chloroform, into highly toxic phosgene gas and other irritating products. Inert-gas welding should not be permitted in the vicinity of degreasers or other sources of chlorinated solvent vapors. Decomposition of the vapors is usually accompanied by a characteristic, irritating, objectionable odor which may serve as an adequate warning. Since the argon gas shielded arc yields greater radiation intensity than helium shielded arcs,

564-350 O - 74 - 15

much more decomposition occurs when argon is used.

2. Screening. The welding operation shall be shielded with a fire resistant screen to protect those not directly involved in the operation from radiation injury to the skin or eyes.

3. Protective Clothing. Welding operators, helpers, and others working inside the screened area should wear protective clothing sufficient to completely cover the body leaving no areas of bare skin. Leather or woolen clothing is preferable since cotton outergarments deteriorate upon exposure to the high intensity ultraviolet radiation. Any exposed areas should be observed for reddening of the skin so that early remedial action can be taken.

4. Eye Protection. As with any other kind of arc welding, flash goggles shall be worn under the welding or hand-held shield. Since visible light as well as total radiation is increased in this type of welding, helmet filter plates should be of the deepest shade that permits adequate visibility of the welding operation. It may be necessary to exceed the shades recommended in article 1011.6 in order to provide adequate protection.

WELDING IN CONFINED SPACES

1045. HAZARDS OF INADEQUATE VENTILATION

Under conditions of improper ventilation, welding operations may create health hazards. These hazards are almost entirely due to:

1. the presence of gases, dusts, and fumes containing lead, zinc, cadmium, fluorine, or compounds thereof (see article 1012 and Chapter 20);
2. the possible formation of oxides of nitrogen;
3. extreme heat.

1046. VENTILATION REQUIRED

When any of the above hazards are present, adequate forced ventilation shall be provided and/or an individual air respirator shall be worn by the operator (see article 1012).

1047. VARIABLES AFFECTING VENTILATION

Attention is invited to the variables listed below which must be evaluated for their effect on calculations of minimum forced general ventilation requirements for spaces regularly used for welding operations:

1. dimensions of space, with special regard to height of ceiling;
2. type of welding (gas, arc, inert-gas shielded);
3. number of operators (gas or electric);
4. composition and coatings of metals to be welded and of fluxes to be used;
5. type and size of electrodes, and amperage used;
6. rate of welding;
7. variations in "natural" ventilation due to weather conditions;
8. path of forced and convection currents and stratification at working level;
9. tendency of fumes to form flocculent dust;
10. accident hazards involved in reduced visibility;
11. excessive deposits of fume-dust on other shop equipment;
12. excessive heat generated by gas and electric arc welding.

1048. SPACE CLASSIFICATION

Three space classifications have been adopted for convenience in setting ventilation standards, as follows:

Class I: Spaces of 50,000 cubit feet and over

Class II: Spaces of 5,000 to 50,000 cubic feet

Class III: Spaces under 5,000 cubic feet

1049. WHERE POSITIVE VENTILATION NOT REQUIRED

1. Outdoor Welding Operations. For welding operations on uncoated ferrous metals conducted in the open air, positive ventilating devices or respiratory protective equipment are not required. However, where an operator is engaged in welding or cutting lead-bearing steels, lead or cadmium-bearing paint, whether indoors or out, an air-line mask or local exhaust ventilation shall be used. Where conditions do not permit their use, a filter-type respirator, approved for protection from lead fumes, may be used, but only for short intermittent periods of work.

2. Class I Spaces. Where welding of uncoated ferrous metals is the largest proportion of the work carried on in spaces over 50,000 cu. ft., positive ventilation is *not* required for the protection of welders *provided:*

a. welding bays are not structurally blocked, thereby obstructing cross ventilation;

b. no welding operations are on the inside of tanks, boilers, or other closed iron or steel containers;

c. a space allowance of 10,000 cubic feet is assured each operator.

1050. INDIVIDUAL VENTILATION DEVICES

1. Exhaust Ducts. Where welding of uncoated ferrous metals is the largest proportion of the work carried on, an individual positive ventilation device for each operator shall be so designed and installed as to remove toxic fumes and dust at their source. This ventilation may be in the form of individual portable exhaust pipes, exhaust ducts from a central duct system, wall or roof fans, or any other equivalent means which will insure fume removal or dilution.

2. Toxic Exhaust Fumes. All ventilating devices installed, particularly portable temporary devices, shall be carefully scrutinized to insure that fumes, dust, etc., are not being exhausted into the same space or into other spaces, thus creating unrecognized hazards. Steps shall also be taken to insure that air replacing that withdrawn is clean and respirable.

3. Hood Devices or Hose-Nozzles. The effectiveness of either a hood device or hose-nozzle in removing fumes at their source depends upon the nearness of the intake openings to the welding operation. In the following table, which sets the minimum air-flow standards for removal of welding fumes, dusts, and gases at their point of origin, allowance is made for variables in the welding zone services, ranging from below 8 inches up to 15 inches from the arc or torch to the exhaust intake:

Individual Positive Ventilation Devices For Indoor Welding
(on uncoated ferrous metals)

Welding zone distance to exhaust intake from arc or torch.	Class I 50,000 cu. ft. or over	Class II 5,000 to 50,000 cu. ft.	Class III under 5,000 cu. ft.
	Minimum air flow per operator—cu. ft. per minute		
Up to 8 inches	200	225	250
8 to 10 inches	250	275	300
10 to 12 inches	300	350	375
12 to 15 inches	350	400	450

1051. GENERAL SHOP OR SPACE VENTILATION

1. Wall or Roof Fans. During welding of uncoated ferrous metals in confined spaces where individual ventilating devices are unavailable, a fan or fans (wall or roof) or other positive ventilating device shall be installed to insure fume dilution and general space ventilation at the following minimum air flow rate:

General Shop Ventilation, Welding Uncoated Ferrous Metals

Space	Minimum air flow cubic feet per minute per operator	OR Complete air change[1] each
Class I	350	20 minutes.
Class II	350	15 minutes.
Class III[2] *(space per operator)*		
4–5,000 cu. ft.		4 minutes.
3–4,000 cu. ft.		3 minutes.
2–3,000 cu. ft.		2 minutes.
Less than 2,000		1 minute.

[1]The volume of the space divided by the cfm. capacity of the blower, equals the theoretical time to change the air once.

[2]At least 1,000 cubic feet as well as the indicated space ventilation should be assured each operator.

2. Fan Efficiency. Particular attention is called to the necessity for selecting a type of fan capable of developing the required air volumes and pressure against the resistance of the exhaust system.

3. Screened Spaces. When electric welding must be performed in a space entirely screened on all sides, the screens shall be so arranged that no serious restriction of ventilation exists. It is desirable to have the screens mounted on end posts so that their bottom edges are about two feet above the floor unless the work is performed at so low a level that the screen must be extended nearer the floor to protect nearby workers from welding glare. In the latter case the screens must clear the deck by several inches.

1052. INDOOR WELDING OF GALVANIZED IRON OR STEEL, BRASS OR BRONZE

1. Frequently and Regularly

a. Class I Spaces. The forced general ventilation prescribed in article 1051 shall be increased by at least 10 percent; or the individual ventilation devices prescribed in paragraph 1050.3 shall be used.

b. Class II and III Spaces. Individual ventilating devices prescribed in the table in paragraph 1050.3 shall be provided. General shop ventilation standards are insufficient to protect the operator from the fumes of these metals.

2. Infrequently and Irregularly (Class I, II, and III spaces). If these spaces are not already provided with the degree of ventilation prescribed in 1(a) above, it will be satisfactory to provide each welder working on galvanized iron or steel, brass, or bronze, with a portable individual ventilating device for use while such operations are being performed.

3. Inside Tanks or Closed Containers. When welding on galvanized iron or steel, brass, or bronze, inside tanks or other closed containers, the operator shall be furnished an approved type of airline respirator or hose mask, and its use shall be strictly enforced.

1053. EXPLOSIVE FUMES

1. Dangers. It must be borne in mind that certain gas and air mixtures such as acetylene and oxygen may accumulate in concentrations which are not toxic but may be explosive. The required ventilation shall be governed by the more dangerous condition.

2. Exhaust to Atmosphere. Utmost care shall be taken that the exhausted vapors are not allowed to discharge into any other compartment or area. Exhaust shall be only to the outside atmosphere. Openings in the vicinity of the exhaust shall be closed to keep vapors from drifting into other areas.

3. Do Not Use Oxygen. When forced ventilation of a space is required or used, it should *not* be accomplished by injecting oxygen in lieu of fresh air. Such a procedure is likely to raise the oxygen concentration of the air in the space and substantially change the flammability limits.

4. Flame Arresters. Wire-gauze flame arresters shall be in place on tank vents used for exhaust outlets, and similar flame arresters shall be provided at the outboard ends of temporary exhaust tubes.

5. Blowers. If weather conditions are such that the exhausted vapors will not be quickly dissipated, air-motor-driven blowers or those driven by explosion-proof electric motors should be used to assist in their dispersal. Electric blowers not equipped with explosion-proof motors shall not be used. If blowers are not used in quiet, humid weather, it is possible for a stream of explosive vapor to drift several hundred yards to a source of ignition, from which a flame will flash back to the source of the vapors.

1054. CERTIFICATION OF CLOSED COMPARTMENTS

No person shall enter and no work shall be permitted in any closed compartment or poorly ventilated space in any shore activity or in any Navy ships or boats under construction or repair until a certificate has been issued by the safety engineer or his authorized representative certifying that the space is safe for men and safe for type of work intended. The procedures and requirements for issuance of such certificates are provided in article 2071.

Chapter 11

WOODWORKING

1101. APPLICATION AND SCOPE

1. Applicability. These safety precautions shall apply to all woodworking machinery and equipment used ashore and afloat. The provisions of American Standard safety codes shall be used insofar as they may be applicable as guides in securing the correction of hazards or hazardous conditions not specifically covered herein.

2. Other Machines Not Excluded. The mention of specific machines is not intended to exclude other woodworking machines from the requirement that suitable guards and exhaust hoods be provided to reduce the operational hazards. The absence of a safety precautionary measure covering any specific equipment, operation, or hazard does not relieve management from the responsibility of providing reasonable safety measures.

1102. INSTRUCTION OF PERSONNEL

1. Experienced Operators. No person shall be permitted to operate any woodworking machinery until he has been instructed as to the hazards and the proper operation of such equipment and the use of protective devices.

2. Sharpening Saws. No workman shall attempt to file or sharpen a saw unless he is qualified and has been properly authorized to perform such work.

3. Guards. Guards shall be installed wherever possible and their use explained and enforced. If special operations and the making of repairs or adjustments require the removal of the guard, it shall be immediately replaced upon completion of the work which required its removal. No person shall be permitted to remove a guard or to operate the machine without the guard except with the consent of his supervisor.

1103. WORKING AREAS

1. Floors. All floors shall be kept in good repair and shall be free from protruding nails, splinters, holes, unevenness, and loose boards. Effective means shall be provided to prevent slipping.

2. Aisles. Aisles shall be of sufficient width to permit the uncrowded and safe passing of personnel, trucks, or material. Where practicable, lines shall be painted on the floor or some similar method shall be employed to mark aisles.

3. Illumination. During all working periods each working area, operation, or process shall be adequately lighted and harmful glare minimized. The illumination shall not be less than the minimum foot-candles given in the following table:

Minimum Foot Candles in Service

Representative activity	*Foot-candles*
Rough sawing and bench work	30
Sizing, planing, rough sanding, medium machine and bench work, gluing	50
Fine bench and machine work, fine sanding and finishing	100

For activities and locations not included in the above list, see the recommended levels tabulated in article 0213.4.

1104. DEFECTIVE EQUIPMENT

1. Hazardous Defects. Tools, machines, devices, or other equipment that are hazardous because of defects or other conditions shall not be used until suitably repaired. All cracked saws shall be removed from service.

2. Wedges. The practice of inserting wedges between the saw disk and the collar

to form what is commonly known as a "wobble saw" shall not be permitted.

3. **Saw Defects.** Dull, badly set, improperly filed, or improperly tensioned saws, shall be immediately removed from service as soon as they begin to cause the material to stick, jam, or kick back when it is fed to the saw at normal speed. A saw to which gum has adhered shall be immediately cleaned.

1105. CARE OF EQUIPMENT

1. **Knives.** All knives and cutting heads shall be kept sharp, properly adjusted, and firmly secured. Where two or more knives are used in one head, they shall be properly balanced.

2. **Arbors.** Arbors of all circular saws shall be free from play.

3. **Bearings.** Bearings shall be kept free from excessive play and shall be kept well lubricated.

1106. SAFETY EQUIPMENT

1. **Push Stick.** A push stick made of a narrow strip of wood or similar material with a notch cut in one end and shaped on the other end to provide a good hand grip shall be used to push material through saws where there is possibility of the operator's fingers coming in contact with blades at point of operation.

2. **Push Block.** A push block of wood or similar material having a handle like a hand plane and a notch or shoulder at the rear end shall be used to push short stock over the jointer knives.

3. **Jig.** A jig or fixture shall be used when cutting or forming irregular pieces or oblique angles.

4. **Fillister.** When narrow strips are cut a fillister piece about 2 inches wide shall be used between the fence or gage and the material being cut. It shall be firmly secured to the table or to the fence by cleats, clamps, or other effective means.

5. **Guards for Moving Parts.** Adequate safeguards shall be provided for all moving parts of equipment used in the mechanical transmission of power, including prime movers and intermediate equipment. Driven machines, such as engines, motors, connecting rods, cranks, fly wheels, shafting, spindles, pulleys, belts, link belts, chain, ropes, rope drives, gears, sprockets, friction drums, cams, couplings, clutches, counterweights, revolving or reciprocating parts shall also be guarded, up to the point of operation.

6. **Guards for Projections.** All projecting keys, setscrews, and other projections in revolving parts shall be made flush or guarded by a substantial metal cover. This does not apply to keys or setscrews within a gear pulley or sprocket casting or other enclosure; nor to keys, setscrews or oil cups in hubs of pulleys less than 20 inches in diameter where they are within the plane of the rim of a pulley.

7. **Exhaust Hoods.** All power saws shall be guarded underneath and behind the table to prevent possible personal contact. Exhaust hoods will be considered as adequate underneath or rear guards.

8. **Power Cut-Off.** A mechanical or electrical power control shall be provided on each machine which will make it possible for the operator to cut off the power from the machine being operated without leaving his position at the point of operation.

9. **Belt Shifter.** In machines driven by belts and shafting, a locking-type belt shifter or an equivalent positioning device shall be used.

1107. DUST CONTROL

1. **Requirements.** Each activity containing 4 or more woodworking machines whose operations create dust, shavings, chips, or slivers shall be equipped with an exhaust system either continuous or automatic in action, of sufficient strength and capacity to remove such refuse from the points of operation and immediate vicinities of machine and work places.

2. **Size.** All exhaust pipes or ducts shall be of such size as to minimize the possibility of clogging. They shall be readily accessible for cleaning. All exhaust pipes or ducts shall empty into dust-tight settling chambers so constructed that dust cannot be discharged into adjoining areas.

3. **Fire Prevention.** The settling or dust chamber shall be of fire-resistant construction and shall be so designed and operated as to reduce to a minimum the danger of dust explosions. The volume of accumulated refuse shall be held to a practical minimum.

1108. HEARING PROTECTION

Operators of woodworking machines and those within the immediate vicinity shall wear ear protective devices whenever the noise generated by the machines has reached a level injurious to the hearing of the workmen (see BuMed Instruction 6260.6A).

WOODWORKING MACHINES

1110. CIRCULAR SAWS

1. **Operating Precautions**

a. **Choice of Saw.** Do not use a ripsaw for cross-cutting or cross-cut saws for ripping. Cross-cut saws can be used for ripping but they are not intended for such work and should not be so used.

b. **Condition of Saw.** See that saw is in good condition before starting to use it. This means sharp, unbroken, and free from cracks. The blade shall be changed if dull, cracked, chipped, or warped.

c. **Setting.** Be sure saw is set at proper height above the table to cut through the wood.

d. **Kickbacks.** Avoid "kickbacks" by standing to one side of the saw—not in line with it.

e. **Push Stick.** Always use a push stick to push short narrow pieces between the saw and the gage.

f. **Debris.** Keep material of any kind from accumulating on the saw table.

g. **Reaching.** Never reach over saw to obtain material from the other side.

h. **Feeding.** When cutting, do not feed wood to saw faster than the saw will cut freely and cleanly.

i. **Attention.** Never leave the sawing machine unattended with the power turned on.

2. **Speed.** Circular saws shall not be operated at speed in excess of 10,000 peripheral feet per minute. Saws tensioned for higher speeds shall be etched by the manufacturer to indicate the maximum operating speed. These etched speeds shall not be exceeded.

The following table shows revolutions per minute for various diameters of saws with the peripheral speed of 10,000 feet per minute:

Diameter of saw (inches)	*R.P.M.*	*Diameter of saw (inches)*	*R.P.M.*
8	4,774	20	1,910
10	3,819	22	1,736
12	3,183	24	1,529
14	2,728	26	1,469
16	2,387	28	1,364
18	2,122	30	1,273

3. **Hand-Fed Ripsaws**

a. **Hoods.** Each circular hand-fed ripsaw shall be guarded by a hood which shall completely enclose that portion of the saw above the table. The hood and mounting shall be so arranged that the hood will automatically adjust itself to the thickness of, and remain in contact with the material being cut. The hood shall be of adequate strength to resist blows and strains incidental to reasonable operation, adjusting and handling, and shall be so designed as to protect the operator from flying splinters and broken saw teeth. The hood shall be so mounted as to insure its operation to be positive, reliable, and in true alignment with the saw; and the

mounting shall be adequate in strength to resist any reasonable side thrust or other forces tending to throw it out of line.

b. Spreaders. Each hand-fed circular ripsaw shall be furnished with a spreader to prevent material from squeezing the saw or being thrown back on the operator. The spreader shall be made of saw steel or tool steel which has been hardened, tempered, and ground to gage so that it is thinner than the saw kerf but thicker than the saw blade. It shall be of sufficient width to provide adequate stiffness or rigidity to resist any reasonable side thrust or blow tending to bend or throw it out of position. The spreader shall be so attached as to remain in true alignment with the saw even when either the saw or table is tilted, and shall be so placed that there is not more than ½ inch space between the spreader and the back of the saw when the largest saw is mounted in the machine.

The provision of a spreader in connection with grooving, dadoing, or rabbeting is not required. On the completion of such operations, the spreader shall be immediately replaced.

c. Nonkickback Finger or Dog. Each hand-fed circular ripsaw shall be provided with one or more nonkickback fingers or dogs mounted on the hood and so located as to oppose the thrust or tendency of the saw to pick up the material or to throw it back toward the operator. They shall be designed to provide adequate holding power for all thicknesses of materials being cut.

4. Hand-Fed Crosscut Table Saws (Including Trimmer Saws). Each circular crosscut table saw shall be guarded by a hood which shall meet all the established requirements.

5. Swing and Sliding Cut-Off Saws

a. Hood Necessary. Each swing or sliding cut-off saw shall be provided with a hood that will completely enclose the upper half of the saw, the arbor end, and the point of operation at all positions of the saw. The hood shall be constructed in such a manner, and of such material, that it will protect the operator from flying splinters and broken saw teeth and will afford the operator a clear view of the cutting edge of the saw at all times.

b. Hinged Hoods. The hood shall be hinged at the back and provided with an extension at the front so that when the saw is returned to the back of the table, the hood will rise on top of the fence; and when the saw is moved forward, the hood will drop on the top of, and remain in contact with, the material being cut.

c. Saw Tables. Each swing and sliding cut-off saw table shall be extended at the point of operation wide enough to maintain table surface below the exposed edge of the saw blade to the full extent of the travel of the saw.

d. Counterweights. Each swing cut-off saw shall be provided with an effective device to return the saw automatically to the back of the table when released at any point of its travel. Such device shall not depend for its proper function upon any rope, cord, or spring. If there is a counterweight, the bolts supporting the bar and counterweight shall be provided with cotter pins. The counterweight shall be prevented from dropping by either a bolt passing through both the bar and counterweight, or a bolt put through the extreme end of the bar. Where the counterweight does not encircle the bar, a safety chain should be attached to it.

e. Limit Stops. Each swing cut-off saw shall be provided with limit chains or other equally effective device to prevent the saw from swinging beyond a front or back position where the gullets of the lowest teeth will rise above the table top.

6. Inverted Swing Cut-Off Saws. Inverted swing cut-off saws shall be provided with a hood that will cover the part of the saw that protrudes above the top of the table or above the material being cut. It shall automatically adjust itself to the thickness of, and remain in contact with, the material being cut.

7. Revolving Double Arbor Saws. Revolving double arbor saws shall be fully

guarded in accordance with all of the requirements for circular crosscut saws or with all of the requirements for circular ripsaws.

8. **Circular Resaws**

a. **Shields.** Each circular resaw shall be guarded by a hood or shield of metal above the saw. Such hood or shield shall be so designed as to guard against danger from flying splinters or broken saw teeth.

b. **Spreader.** Each circular resaw (other than self-feed saws with a roller or wheel at back of the saw) shall be provided with a spreader fastened securely behind the saw. The spreader shall be slightly thinner than the saw kerf and slightly thicker than the saw disk.

9. **Self-Feed Circular Saws**

a. **Hoods.** Feed rolls and saws shall be protected by a hood or by semicylindrical guards to prevent the hands of the operator from coming in contact with the in-running rolls at any point. The guard shall be constructed of heavy material, preferably metal, and the bottom of the guard shall come down to within 3/8 inch of the plane formed by the bottom of working surface of the feed rolls.

b. **Nonkickback Fingers.** Each self-feed circular ripsaw shall be provided with sectional nonkickback fingers for the full width of the feed rolls. They shall be located in front of the saw.

10. **Portable Circular Saws**

a. **Guards.** All portable, power-driven saws shall be equipped with guards which will automatically adjust themselves to the work when in use, so that none of the teeth protrude above the work. The guard over the blade shall be adjusted so that it slides out of its recess and covers the blade to the depth of the teeth when the saw is lifted off the work.

b. **Face Protection.** Goggles or face-shields shall be worn while using the saw and while cleaning up debris afterward.

c. **Grasp Saw Firmly.** Saws are to be grasped with both hands and held firmly against the work. Care shall be taken that the saw does not break away, thereby causing injury.

d. **Inspection of Blade.** The blade shall be inspected at frequent intervals and always after it has locked, pinched, or burned. The electrical connection shall be broken before this examination.

e. **Overloading Motor.** The saw motor shall not be overloaded by pushing too hard or cutting stock that is too heavy.

f. **Examination of Material.** Before using the saw, the material to be cut shall be carefully examined and freed of nails or other metal substances. Cutting into or through knots shall be avoided as far as possible.

g. **Making Repairs.** The electric plug shall be pulled before any adjustments or repairs are made to the saw. This includes changing the blade.

1111. BAND SAWS

1. **General**

a. **Testing for Defects.** Band saw wheels should be tested by experienced men at least once a week with a small machinist's hammer to detect cracks or loose spokes. The sound of a cracked or broken wheel is dull and flat.

b. **Cracked Blade.** Cracked blades should not be used. If a blade develops a "click" as it passes through the work, the operator should shut off the power as the click is a signal that the blade is cracked and may be ready to break. After the saw blade has stopped moving, it should be replaced with one in proper condition.

c. **Broken Blade.** If the saw blade breaks, the operator should shut off the power, and not attempt to remove any part of the saw blade until the machine is completely stopped.

d. **Free Working Blade.** If the work binds or pinches on the blade, the operator should never attempt to back the work away from the blade while the saw is in motion since this may break the blade. He should always see that the blade is working relatively freely through the cut.

e. **Danger From Cold.** A band saw preferably should not be operated in a location where the temperature is below 45 de-

grees Fahrenheit as it may break when the machine is started.

f. Size of Saw. Using a small saw for large work or forcing a wide saw on a small radius is bad practice. The saw blade should in all cases be as wide as the nature of the work will permit.

g. Stopping Saw. Band saws should not be stopped by thrusting a piece of wood against the cutting edge or side of the band saw immediately after the power has been shut off because the blade may break. Band saws 36 inches and larger shall have a hand or foot brake.

h. Brazing. Particular care should be taken when sharpening or brazing a band saw blade to see that the blade is not overheated and that the brazed joints are thoroughly united and are finished to the same thickness as the rest of the blade. It is recommended that all band saw blades be butt welded where possible, as this method is much superior to the old style of brazing.

2. Band Saws and Band Resaws

a. Enclosing Blade. All portions of the saw blade shall be enclosed or guarded, except the working side of the blade between the guide rolls and the table. Band-saw wheels shall be fully encased.

b. Guards. The outside periphery of the enclosure shall be solid. The front and back of the band wheels shall be enclosed by solid material, sheet metal or casting, or perforated metal. The sheet metal is to be not less than 0.037 inches (U.S. Gage No. 20). The guard for the portion of the blade between the sliding guide and the upper-saw-wheel guard shall enclose the saw blade on all sides. This portion of the guard shall be self-adjusting to raise and lower with the guide. The upper wheel guard shall be made to conform to the travel of the saw on the wheel and the top member of the guard shall have at least a 2-inch clearance outside the saw.

c. Automatic Tension. Each band-saw machine shall be provided with an automatic tension control device to prevent breakage of saw blades due to improper tension.

d. Feed Rolls. Feed rolls of band resaws shall be protected with a semicylindrical guard to prevent the hands of the operator from coming in contact with the in-running rolls at any point. The guard shall be constructed of heavy material, preferably metal, and the edge of the guard shall come to within 3/8 inch of the plane formed by the inside face of the feed roll in contact with the stock being cut.

1112. SHAPERS

1. Inspection. Shapers shall be inspected before use. They shall be free of cracks and dirt, and shall be sharp.

2. Removing Blades. When one blade is removed from a shaper spindle for sharpening or for some other purpose, all other blades should be removed at the same time. This is in case the machine is started accidentally.

3. Starting and Stopping Device. All double-spindle shapers shall be provided with a spindle starting and stopping device for each spindle. All shapers shall be provided with an automatic brake to stop the revolving heads as soon as possible after the power is shut off.

4. Cleaning and Repairing. The power shall be turned off and the steps taken to insure that it will not be turned on before the cleaning, adjusting, or repairing of the shaper is completed.

5. Speed. The correct speed shall be used while shaping. This may vary with the type of cutter or material. The supervisor shall be consulted in case of doubt.

6. Table Guide. When a table guide is used, the operator should be sure that it is well fastened and will not slip.

7. Knives

Solid cutters which fit over the spindle shall be used as standard practice. When it is necessary to use knives the following precautions shall apply:

a. Knife blades and collars for shaper heads shall be precision ground so as to

give uniform pressure on all knife blades and keep them from flying out while the machine is in motion.

b. Collars shall be provided with "stop pins" and knife blades shall have a recess cut in them for the pin as an added precaution to keep the blades from flying out.

c. Only sharp knives of the same bevel and balance, free of burrs or other imperfections shall be used.

d. Short knives shall not be used. A knife shall not be used after its length has been shortened to the extent that the butt end does not extend beyond the middle point of the collar.

e. Before tightening the knives in place the operator shall make sure the collar surfaces are free of burrs or foreign material which will prevent the knives from having an adequate bearing.

8. Cutting Techniques

a. Operators should not "back up" on a cut. Running material in the direction of rotation of the spindle, instead of against it, is dangerous.

b. Operators should avoid taking deep cuts or feeding the stock too rapidly or with too great pressure.

9. Machining Wood. Operators should be particularly careful in machining wood that contains cross grains or knots, as these may cause the hands to be thrown into the knives or cause kickbacks.

10. Protection of Hands. Operators should not rest their hands near edge of material being cut.

11. Protection of Face. Goggles or face-shield shall be worn while shaping.

12. Guards. The cutting heads of each wood shaper, hand-fed panel raiser, or other similar machine not automatically fed shall be enclosed with a cage or adjustable guard so designed as to keep the operator's hands away from the cutting edge. The diameter of circular shaper guards shall be not less than the greatest diameter of the cutter. In no case shall a warning device of leather or other material attached to the spindle be acceptable.

13. Cylindrical Heads. Cylindrical heads should be used wherever the nature of the work will permit. Templates, jigs, and fixtures which will remove the operator's hands from the point of operation should be used wherever the nature of the work will permit.

14. Kickback. A kickback preventer should be used when possible.

1113. TENONING MACHINES

1. Guards. Each tenoning machine shall have all cutting heads, and saws if used, covered by metal guards. These guards shall cover at least the unused part of the periphery of the cutting head. If such guard is constructed of sheet metal, the material used shall be not less than 1/16 inch in thickness, and if cast iron is used, it shall be not less than 3/16 inch in thickness.

2. Exhaust Hood. Where an exhaust system is used, the guard shall form part or all of the exhaust hood and shall be constructed of a metal of a thickness not less than the above.

3. Feed Chains and Sprockets. Feed chains and sprockets of all tenoning machines shall be completely enclosed, except that portion of chain used for conveying the stock. At rear ends of frames over which feed conveyors run, sprockets and chains shall be guarded at sides by plates projecting beyond periphery of sprockets and ends of lugs.

1114. JOINTERS

1. Knives

a. Only sharp and evenly balanced knives should be used in a jointer cutting head.

b. The knives must not be set to take too heavy a cut, as a kickback is almost certain to result especially if there is a knot or change of grain in the stock.

c. The knives must be securely fastened after the machine has been standing in a cold building over the weekend.

2. **Push Block.** When pieces shorter than 18 inches are machined, a push block should be used.

3. **Point of Operation.** Each hand-fed planer and jointer with horizontal head shall be equipped with a cylindrical cutting head, the throat of which shall not exceed 7/16 inch in depth nor 5/8 inch in width. It is strongly recommended that no cylinder be used in which the throat exceeds 3/8 inch in depth or 1/2 inch in width.

4. **Automatic Guards.** Each hand-fed jointer with a horizontal cutting head shall have an automatic guard which will cover all the section of the head on the working side of the fence or gage. The guard shall automatically adjust horizontally for edge jointing and vertically for surface work, and shall remain in contact with the material at all times.

5. **Horizontal Head Jointer.** Each hand-fed jointer with horizontal cutting head shall have a guard which will cover the section of the head back of the gage or fence.

6. **Vertical Head Jointers.** Each wood jointer with vertical head shall have either an exhaust hood or other guard so arranged as to enclose completely the revolving head, except a slot of such width as may be necessary and convenient for the application of the material to be jointed.

1115. PLANING, MOLDING, STICKING, MATCHING MACHINES, AND PROFILE AND SWING HEAD LATHES

1. **Guarding of Cutting Heads.** Each planing, molding, sticking, and matching machine, and profile and swing head lathe, shall have all cutting heads, and saws if used, covered by a metal guard. If such guard is constructed of sheet metal, the material used shall not be less than 1/16 inch in thickness; and if cast iron is used, it shall be not less than 3/16 inch in thickness.

2. **Exhaust Hoods.** Where an exhaust system is used, the guards shall form part or all of the exhaust hood and shall be constructed of metal of a thickness not less than the above.

3. **Feed Rolls.** Feed rolls shall be guarded by hood or a semicylindrical guard to prevent the hands of the operator from coming in contact with the in-running rolls at any point. The guard shall be fastened to the frame carrying the rolls so as to remain in adjustment for any thickness of the stock.

4. **Sectional Feed Rolls.** Sectional feed rolls shall be provided for planers. Where solid feed rolls are used, the sectional finger devices shall be used to prevent kickbacks.

1116. HAND PLANES AND DRAW KNIVES

1. **Choice of Tool.** Care shall be used in selecting the correct plane or draw knife for the work to be done.

2. **Firmly Clamped.** Wherever possible, the work shall be held firmly in a clamp or vise.

3. **Depth of Cut.** The plane blade shall be properly adjusted, as too deep a cut will cause the plane to buck and clog.

4. **Firmly Grasped.** The plane or draw knife shall be grasped with both hands.

5. **Bracing with Knees Prohibited.** No one shall use a draw knife while using the knees to brace the material.

6. **Protecting Blade.** To avoid possible injury to the hands when reaching for other tools, planes and draw knives shall be put away in such a manner that the blades will be protected.

1117. BORING AND MORTISING MACHINES

1. **Chucks.** Safety-bit chucks with no projecting setscrews shall be used.

2. **Boring Bits.** Boring bits shall be provided with a guard that will enclose all portions of the bit and chuck above the material being worked.

3. **Chain Mortiser.** The top of the cutting chain and driving mechanism shall be enclosed.

4. Counterweights. If there is a counterweight, one of the following, or equivalent means, shall be used to prevent its dropping:

a. it shall be bolted to the bar by means of a bolt passing through both bar and counterweight;

b. a bolt shall be put through the extreme end of the bar;

c. where the counterweight does not encircle the bar, a safety chain shall be attached to it; other types of counterweights shall be suspended by chain or wire rope and shall travel in a pipe or other suitable enclosure wherever they might fall and cause injury.

5. Universal Joints. Universal joints on spindles of boring machines shall be completely enclosed to prevent injury to operator.

6. Guarding Operating Treadles. All operating treadles shall be covered by an inverted U-shaped metal guard, fastened to the floor, of adequate size to prevent accidental tripping.

1118. SANDING MACHINES

1. General

a. Inspection. All sanders shall be carefully inspected before use. Sanding disks or belts shall not be used if they are frayed or cracked.

b. Personnel Protection.

(1) Goggles and respirators shall be used during the sanding operations and while cleaning up afterward.

(2) The hands or other parts of the body shall be kept from coming into contact with the abrasive surface of the sander.

c. Grasping Sander Firmly. Sanders are to be grasped with both hands and held firmly against the work. Care shall be taken that the sander does not break away, thereby causing injury or damage.

d. Disconnecting. The electric plug shall be pulled before sanding belts or disks are changed or before repairs or adjustments are made to the sander.

2. Belt Sanding Machines. Each belt sanding machine shall have both pulleys enclosed in such manner as to guard the points where the sanding belt runs onto the pulleys. The unused run of the sanding belt shall be enclosed.

Belt type sanders shall be adjusted to the proper tension.

1119. COMBINATION OR UNIVERSAL WOODWORKING MACHINES

1. Guards. For combination or universal woodworking machines, each point of operation of any tool shall be guarded as required for such tool in a separate machine. Such machines shall be provided with a separate starting and stopping device for each point of operation.

2. Feed Rolls. Feed rolls of self-feed sanding machines shall be protected with a semicylindrical guard to prevent the hands of the operator from coming in contact with the in-running rolls at any point. The guard shall be constructed of heavy material, preferably metal, and firmly secured to the frame carrying the rolls so as to remain in adjustment for any thickness of stock. The bottom of the guard shall come down to within 3/8 inch of a plane formed by the bottom or contact face of the feed roll where it touches the stock.

3. Drum Sanding Machines. Each drum sanding machine in a location where an exhaust system is required shall have an exhaust hood. If no exhaust system is required, another type of guard shall be used. Guards shall be so arranged as to enclose the revolving drum. However, in cases where the use of a table makes complete enclosure impracticable, the guard should be arranged so as to enclose as much of the disk as possible and still leave room for manipulation of the material to be finished.

4. Disk Sanding Machines. Each disk sanding machine shall have an exhaust hood or other guard which shall be arranged as described above.

SAWMILLS

1125. HOUSEKEEPING

1. **Tripping Hazard.** Good housekeeping around a sawmill is very important. Many a man has tripped over the crop end of a board and has fallen into a saw.

2. **Clear Area.** Before starting to chop or saw a tree, workmen shall clear a working area around it and a path so that they can get away from the tree quickly when it begins to fall.

1126. PERSONNEL PROTECTION.

1. **Sawmill Machinery.** Loose clothing shall not be worn around a saw or any other piece of machinery at the sawmill. Gloves should *not* be worn while operating machinery.

2. **When Handling Lumber.** Workmen handling lumber shall wear heavy aprons, and leather gloves or other suitable hand protection.

3. **Goggles.** Goggles shall be worn while doing work where dust or flying chips are a hazard to the eyes.

4. **Footwear.** All workmen handling wood blocks, boards, bundles of shingles, etc., should wear safety shoes or safety-toe clips.

5. **Hard Hats.** Workmen required to work under crane or monorail tracks, or where materials stored overhead create a hazard, shall wear protective hard hats while so employed.

6. **Carrying Cases.** Sharp tools shall be transported in carrying cases, or with sheathes installed over the cutting edges.

1127. SAFE OPERATING PROCEDURES

1. **Protection of Hands.** When operating power saws, the hands should always be kept out of the line of saw travel.

2. **During Stormy Weather.** Work shall not be carried on out-of-doors during periods of high wind and storms of sufficient violence to endanger workmen, except in case of emergency.

3. **Attaching Dogs.** When attaching dogs to logs, care should be taken not to place the hand or fingers where they might be caught between the log and the dog.

4. **Risk of Falling Lumber.** Workmen shall not stand under lumber which is being moved.

5. **Kickback.** Workmen operating power feeds or other machines subject to kickback hazards shall not stand in line with the stock being fed into machine unless it is equipped with positive means of preventing kickbacks.

6. **Portable Chain Saws.** Workmen other than operators shall stand clear of portable chain saws they are operating.

7. **Riding Sorting Chains.** Workmen shall not ride moving sorting chains or similar equipment, except where it is necessary in the operation of grading, tallying, or straightening lumber.

8. **Crossing Sorting Chains.** Only workmen who work on sorting chains shall cross over those chains. Where provided, elevator crossovers shall be used.

Chapter 12
PIPING AND PLUMBING; SEWAGE AND WATER TREATMENT

PIPING AND PLUMBING

1201. INTRODUCTION

1. **Minimum Requirements Code.** The approved safety and health requirements for design, installation, inspection and performance of modern plumbing equipment and systems ashore are contained in *Minimum Requirements for Plumbing,* American Society of Mechanical Engineers.

2. **Excavation Work.** Precautions to be observed by pipe fitters and plumbers when engaged in trench excavation work will be found in article 0887.

1202. WORK ON PIPING

1. **Acids.** Acids used should be kept in only glass or lead containers.

2. **Pouring Joints.** Care shall be exercised to keep out from under hot joints while they are being poured.

3. **Hot Lead.** Hot lead should not be poured over water or wet caulking.

4. **Oily Floors.** If floors are oily and cannot be kept dry, they should be covered with sand or oil-absorbent compound.

5. **Connections.** Any tee, valve, or other service connection which is to be used on piping in maintenance or repair operations should be very carefully checked to make sure that it is designed to withstand the maximum pressure that might be exerted on it.

1203. SEWER WORK

1. **Leaking Pipes.** Before plumbing work is started on sewer jobs, pits, or tanks where the hazard of broken or leaking pipes may be present, these two preparatory steps shall be taken:

a. **Protective Devices.** Gas detectors, respirators, inhalators, standard gas masks, safety belts, lifelines, and blowers shall be provided as needed.

b. **Testing.** Tests shall be made for explosive gas-air mixtures and oxygen deficiencies in these locations before personnel enter them.

2. **Control Measures.** Where such hazards are found to exist, adequate control measures will be instituted and workmen shall don suitable respiratory equipment as necessary, before entering the structure. Workmen should be instructed as to the kind of respirator to use in an emergency, and how to assemble and use this equipment properly. This information will be found in NAVEXOS P-422, *Safety Equipment Manual.*

3. **Two-Man Watch.** At least two men shall be assigned to each sewer job where the hazard of broken or leaking pipes may be present. One man shall always be in a relatively safe position and prepared to render assistance in an emergency.

4. **Removing Manhole Cover.** To help dissipate any toxic or flammable gas that may exist in a sewer or underground sewage pumping plant, the manhole cover should be removed several minutes before a workman descends.

1204. PROTECTIVE CLOTHING AND EQUIPMENT

1. **Clothing.** Goggles, gloves, and other protective clothing provided for personnel safety shall be worn in all pipe fitting, pipe handling, and plumbing work involving the pouring or handling of hot metal or acid, and in any other work where flying material might

564-350 O - 74 - 16

injure the eyes. Goggles shall be worn when using compressed air to clean out sand, dirt, or scale from pipes before installation.

2. **Flameproof and Heatproof Garments.** Flameproof garments shall be worn when using blowtorches, welding torches, or similar tools. Plumbers should wear heavy coveralls and leggings which also cover the instep, as a protection against hot lead.

3. **Safety Belt.** When entering deep tanks, deep sewers, and other deep underground structures, a safety belt and lifeline shall be worn.

4. **Blowers.** Portable blowers are recommended for all tank, pit, or manhole work where there is any question as to the presence of noxious gases, vapors, or oxygen deficiency. These blowers should have vaporproof, totally enclosed motors or nonsparking gas engines, and when used they should be placed not less than 6 feet away from the opening and on the leeward side protected from wind, so that they will not serve as a source of ignition for any flammable gas which might be present.

1205. TOOLS–GENERAL

1. **Condition.** Tools and appliances shall be kept in good condition. Worn tools should be replaced. Check hammer handles frequently; hammers with broken or cracked handles shall not be used.

2. **Housekeeping.** Tools or materials shall not be allowed to clutter up the floor and become stumbling hazards. Pieces of scrap pipe should be picked up promptly and taken to the scrap bin or to the scrap tubs for the next scheduled pickup.

3. **Vise Jaws.** Vise jaws should grip the material securely. When threads are being cut, and during backing off operations, the stock should be held firmly.

4. **Protection of Threads.** Freshly cut threads should be protected with caps or couplings when possible. Care should be exercised to guard against sharp burrs or fins.

5. **Pipe Threading.** When operating a pipethreading machine, the clearance of the pipe shall always be ascertained before starting the machine.

6. **Molten-Lead Pot.** A cold ladle or other cold material shall never be dropped into a pot of molten lead, as an explosion may result.

1206. PIPE WRENCHES

1. **Clearance.** Care should be taken to assure that there is plenty of clearance in case the wrench should slip.

2. **Extension.** An extension should never be used on a pipe wrench, as it puts a strain on the wrench which it is not designed to take.

3. **Facing Forward.** An adjustable pipe wrench should always be faced forward in the direction the handle is to turn. When used that way adjustable wrenches can withstand the greatest force, because the pulling force is applied to the stationary jaw side of the handle.

4. **Bite.** The bite of an adjustable wrench should always be taken near the middle of the jaws, so that there will be teeth in front if the wrench slips.

5. **Strain.** Small wrenches should not be overstrained. Wrenches should not be subjected to a severe side strain, and they should never be used as hammers.

1207. HANDLING PIPE

1. **Gloves.** Workmen should wear leather or leather-faced gloves when handling pipe.

2. **Standing Clear.** Workmen should stand to one side when pipe is being unloaded from a truck or railway car.

3. **Piling Pipe.** Pipe should be piled so that the ends of the pipe will be even and not project into walkways. It should be stacked straight, that is, not crossed. Pipe should not be piled directly on the bare ground; racks or dunnage should be provided.

4. **Storing.** Pipe should always be blocked to prevent it from rolling. Where practical, pipe should be stored on specially designed sills or racks.

5. **Lifting and Carrying**

a. **Method.** When lifting heavy pieces of pipe, bend the knees, keep the back line as nearly vertical as possible, and hold the load close to the body; then straighten the knees and pull the load up directly over the feet. Lift with the legs, not with the back.

b. **Forward End Up.** Pipe should be carried with the forward end up, so as to clear the heads of other persons.

c. **Warning Flag.** When pipe is transported on a vehicle, a red warning flag shall be placed on the projecting ends.

d. **Team Work.** When carrying a long and heavy pipe, each member of the crew should exert the utmost care to work together as a team, while observing the following precautions:

(1) All the workmen must understand the signals for lifting and lowering.

(2) Each man should make sure that his feet are in the clear.

(3) Use the proper tools, either tongs or a carrying bar with a U-shape bend to fit the pipe.

(4) Take a firm grip on the lifting bar or tongs.

(5) Lift at a given signal of the supervisor or co-worker, with all members of the crew lifting and moving together.

(6) Carry the load without sudden starts or stops; move slowly and take care to place the feet firmly.

(7) Stop at the appointed place, and wait for the supervisor's or co-worker's signal to lower.

(8) Lower the load carefully, bending at the knees as in lifting, and lower slowly along with all the other members of your crew.

6. **Threaded Pipe.** Use caution in handling threaded pipe; the threads are always sharp and will cut the flesh easily. Do not put the hands inside the pipes.

7. **Removing From Pile.** When removing pipe, work from the top end of the pile as much as possible. Pipe larger than two inches in diameter should be handled by means of a hardwood pipestick.

8. **Lifting Devices.** Use block and tackle, chain falls, or other lifting devices in handling heavy pipes and fittings.

1208. PIPING SYSTEM REPAIR

1. **Tests.** Hydrostatic tests of the piping on all naval vessels should be conducted quarterly to detect leaks or other defects in the systems. (For the prescribed pressure tests of fuel oil service piping in oil service systems see *Bureau of Ships Technical Manual,* NAVSHIPS 250-1, chapter 55, "Fuel Oil and Equipment.")

2. **Strain on Pipe.** Piping shall not be used for handholds or footholds, or be otherwise subjected to strain by such acts as securing chain falls to it or utilizing it as support for weights.

3. **Prevention of Corrosion.** Corrosion of piping shall be prevented by keeping the exterior of pipes properly painted and free from moisture. Graphite or asphaltum paint is recommended for the exterior of piping. As a general rule, copper and brass pipe should not be painted. The piping in bilges, voids, and ballast tanks should not be painted either, unless it is made of steel or iron unprotected by galvanizing, or unless specifications require painting.

4. **Blowing Line.** Before dirt or condensate is blown from a pressure line or equipment, care should be taken to see that all persons nearby are in a safe position.

5. **Valves.** Before repairs to piping systems are attempted, the valves shall always be locked and the system drained. Workmen opening lines or valves should be watchful for any back pressure which may remain, and for hot lines. They shall wear goggles and suitable clothing as protection against escaping gas or liquid.

6. **Acids Present.** If acids are encountered when repairing a piping system, the pipes shall be drained, all connecting systems blanked off, and the valves properly cleaned and blocked.

7. **Water-Hammer.** To prevent water-hammer, all water in the steam piping system should be drawn off before steam is admitted.

8. **Breaking Flange Joints**

a. **Pre-Check.** Before breaking flange joints, particularly in steam and hot water lines or in those salt water lines of ships which have possibility of a direct connection with the sea, special care shall be exercised to make sure that:

(1) there is no pressure on the line;

(2) the valves which cut pressure off the part undergoing repair are secured in such a manner that they cannot be opened accidentally; and

(3) the line is completely drained.

b. **Procedure.** When breaking joints let two of the flange securing nuts (the diametrically opposite ones, if possible) remain in place while the others are being removed. Then slack off the two remaining nuts sufficiently to allow breaking of the joint. After the line is proved to be clear, all the nuts may be removed. This procedure prevents the scalding of personnel and the flooding of compartments. Care shall always be exercised to prevent vapor explosions of flammable liquids in lines when joints are broken. When separating flanges with a chisel, drive the chisel first through a small sheet of lead or rubber, and let this remain on the chisel to shield personnel in the area from possible spray.

c. **Open Ends.** When steam lines are broken for repair, the open ends shall be closed with a blank flange bolted in place. This method of closing the line prevents entry of foreign matter and precludes the possibility of scalding personnel in the event the line becomes charged with steam. Wooden plugs shall not be used for this purpose due to possibility that a leaky valve may cause steam pressure to build up resulting in ejection of plug and possible injuries to personnel.

9. **Blow-Out Valves to Sea Chest.** When opening the steam blow-out valves to a sea chest to relieve the pressure, care should be exercised to prevent building up a pressure in excess of 35 pounds per square inch in the sea chest.

10. **Reducing Valve.** When a reducing valve is in use, the inlet valves should be opened "full." Reducing valves must be drained and warmed up before they are adjusted.

11. **Warming and Equalizing.** Before opening large steam valves the bypass valves should be opened first to warm the lines and equalize the pressures. If there are no bypass valves, the connecting valve should be cracked slightly to accomplish warming and equalizing.

12. **High-Pressure Line.** Before starting work on a high-pressure air or steam pipe line, the control valves involved shall be wired tightly shut, drained, and relieved of all pressure, and the controlling valves tagged with the following sign: DANGER—DO NOT OPEN. This shall be done prior to breaking or opening the pipe fittings.

13. **Cross Connections.** When making cross connections, extreme care shall be taken not to connect non-potable water systems to potable systems, or water lines to sewer lines.

14. **Chlorine Gas Lines.** Whenever artificial heating is necessary with any chlorine gas piping, in order to prevent liquefaction due to unfavorable temperature conditions, such heating should be limited to a maximum temperature of 140° F. Never apply high temperature steam directly to any chlorine gas lines or otherwise raise the temperature of the piping above this limit.

15. **Freezing.** In freezing weather, auxiliary machinery in exposed positions shall be drained to prevent damage from freezing.

1209. VALVE STEMS

Important valves in a ship's piping system, and all other valves that are likely to stick should be removed once a month or oftener depending upon the frequency which experience shows to be necessary.

1210. INSPECTION OF SEA VALVES IN DRYDOCK

1. Inspection and Assembly. Whenever a ship is placed in drydock, all outboard valves shall be examined under the direction of the engineering officer, and necessary repairs made for placing the outboard valves in efficient condition. When assembling sea gate valves, the gate should be in the half-open position before the bonnet nuts are tightened, to ensure alignment of the guides in the valve bonnet and valve body.

2. Cold-Water Meters. Since the ordinary cold-water meter has certain hard rubber parts which will be ruined by distortion if subjected to temperatures above 100° F., cold-water meters shall never be utilized on hot-water lines.

1211. INSPECTION OF TRAPS

All traps in use shall be tested quarterly, and those found to be leaking shall be repaired at once. Particular care should be exercised to keep clean the strainers located ahead of the traps.

1212. THAWING FROZEN PIPES INSIDE BUILDINGS

In thawing frozen water pipes or heating pipes inside buildings, use hot water. Do not use open flame. A safe method is to wrap the frozen section of the pipe with cloths and pour hot water upon them until the ice gives away. Harm to the floor may be avoided by catching the water in buckets or long pans, or by covering the floor with heavy rags or rugs which will absorb the water.

1213. IDENTIFICATION OF PIPING SYSTEMS

1. Identification of Systems. Military Standard No. 101 establishes a color code for visual warnings to accompany the written identification of materials conveyed in piping systems and compressed gas cylinders. This color code is applicable to all piping installations where color coding is used in naval shore activities.

2. Where No Identification Is Provided. Where piping systems are not properly identified by color schemes, tags, or stencils, and no piping layout is available, care shall be exercised in removing valves and fittings to avoid breaking into live piping systems by mistake.

1214. NEW PIPING WORK

1. Pulsation and Vibration. In the installation of new piping adequate provision must be made for expansion and contraction, and for counteracting pulsation and vibration.

2. Traps and Aircaps. Steam and air piping shall be equipped with adequate traps or other means for removing liquid from the line. Aircaps shall always be provided on fixtures, and air discharge pipe shall be so installed that pockets where oil may accumulate are avoided.

1215. AIR-COMPRESSOR PIPE LINES

1. General. It has been established that explosions in high pressure air systems have occurred due to the presence of oil in the air piping and that such explosions can be prevented by minimizing the amount of oil contamination in the compressed air piping and by observing appropriate operating procedures and precautions. The following precautions have been arrived at through extensive laboratory tests and should be rigorously observed. Their purpose is to provide maximum safety from explosion by the prevention of deposit and accumulation of lube oil in the system.

2. Inspection of the System. The compressed air system should be inspected regularly and when oil contamination is suspected. When inspection indicates the presence of lubricating oil in the piping or components in amount more than a light film

coating, the system shall be cleaned in accordance with existing instructions.

3. **Drains.** Drain moisture separators, interstage separators, air flasks, and receivers frequently to prevent moisture and possible lubricant carryover.

4. **Valve Manipulation.** Avoid rapid manipulation of manual valves. The heat of compression caused by sudden flow of high pressure air into an empty line or vessel can cause an explosion if oil is present.

5. **Cleaning Solvents.** Combustible cleaning solvents shall not be used where they may be drawn into the compressor intake, nor used for cleaning compressor parts at any time.

6. **Sooty Deposits.** Check the compressor discharge for black, sooty deposits. This indicates the existence of conditions which could result in an explosion within the system. When this condition is discerned, measures should be taken to inspect the system to ensure an oil free condition.

7. **Application of Heat.** Avoid the application of heat to the system piping or components when hot work is being done in the vicinity and avoid striking a sharp or heavy blow on any pressurized part of the system.

8. **Charging From Shore.** Appropriate precautions should be taken to insure against contamination of the ship's air system when charging from a shore system.

9. **High Temperatures.** Monitor the system closely to ensure that excessive temperatures which could result in autoignition, do not occur. Hot spots on piping or components as determined by touch should be investigated and corrected.

10. **Valve Calibration.** When pressure gages must be removed for calibration or other reason, shut the gage valve, but leave the root valve open. Before replacing the gage, shut off the root valve, install the gage, then open gage valve, and finally slowly open the root valve.

11. **Testing High-Pressure Gages.** Never test high-pressure gages in a dead weight tester that uses oil as a fluid, since even minute amounts of oil remaining in the bourdon tube of the gage represent a potentially dangerous situation. Test in a comparator-type tester or in a dead weight tester which uses distilled water.

12. **Fire Preventive Cleaning.** Air compressor pipe lines through which hot air passes should be kept clean to avoid the starting of fire in accumulated dust or oil.

13. **In Freezing Weather.** When shutting down a compressor, all jacket and cooler drains must be opened in freezing weather.

1216. GASOLINE BLOWTORCHES AND PLUMBERS' FURNACES

1. **Directions Must Be Provided.** Every gasoline blowtorch and plumber's furnace shall be provided with a complete set of operating instructions (i.e., directions for filling, pumping up the air pressure, lighting, and extinguishing), and no one shall use a gasoline blowtorch or plumber's furnace until he has read and is familiar with the operating instructions.

2. **Filling Out-of-Doors.** Gasoline blowtorches and plumbers' furnaces should, preferably, be filled out-of-doors. If they are filled indoors, they shall be filled at a point remote from open flame, sparks, or other source of ignition. These torches or furnaces shall not be filled while hot. Safety cans shall be used when blowtorches are being filled.

3. **Prohibited Fuels.** Gasoline containing lead compounds or benzol shall not be used.

4. **Filler Plug.** Laundry soap may be used on threads of the filler plug to ensure a tight seal. The filler plug should be tightened gently; force may ruin the gasket or strip the threads of the plug. The filler plug shall not be loosened while the burner is hot.

5. **Pumping up Pressure**

a. **Approved Devices Only.** Alterations on torches or furnaces which would

permit pumping up the pressure by any method other than the use of pumping devices provided by the torch or furnace manfacturers shall not be made. No device other than the pump supplied with the torch or furnace shall be used to obtain working pressure.

b. Approved Procedure. Preferably, pressure should not be pumped up while the torch or furnace is lighted. Torches shall not at any time be pumped up to excessive pressure. Five to fifteen strokes of the pump are enough, depending upon the size of the tank and the amount of gasoline in it.

6. Storing. Before torches or furnaces are stored the pressure in the tanks shall be released and the valves secured.

7. Test and Inspection. Before torches or furnaces are lighted they shall be examined carefully for leaks.

a. Regular Inspection By Competent Personnel. All torches and furnaces shall be inspected and tested at frequent and regular intervals by competent persons to make sure that the torches and furnaces are in proper operating condition.

b. Defective Torches and Furnaces. Any defect found in torches or furnaces shall be reported at once to the job supervisor. No torch or furnace which is defective in any way shall be used until after such defect has been properly repaired.

8. Overflow

a. Priming Cup. The priming cup should not be overfilled, as the gasoline may flow over the tank and become ignited, thus furnishing sufficient heat to develop a dangerous pressure within the tank. If gasoline should flow over the tank it should be carefully wiped off before the torch or furnace is lighted.

b. Heating Pots. When heating pots, care should be taken to prevent overflow or igniting of the material being heated.

9. Lighting Torches. Torches or furnaces should not be lighted until the gasoline in the priming cup has nearly all been consumed. Immediately after the torch or furnace has been lighted the flame should be shielded from the wind. Windbreaks should be made of noncombustible material, without bottoms and easily removable. Torches and furnaces should preferably be preheated and lighted out-of-doors.

10. Stuffing Boxes. Stuffing boxes shall be kept tight so as to prevent leaks around the valve stem. They shall not be tightened while torches or furnaces are in use.

11. Unventilated Spaces. A torch should not be used in a small unventilated space. It may heat up and thus become a source of danger, and it may exhaust the supply of oxygen, causing the operator to lose consciousness or even his life from suffocation. When such use is unavoidable, it is necessary to provide airfed respiratory protective equipment for the workers.

12. Abuse of Torches. Torches should not be dragged across the floor or abused in any other way.

13. Melting of Lead and Zinc. When gasoline blowtorches or plumbers' furnaces are used to melt materials such as lead and zinc, which may give off toxic fumes, care should be taken to see that proper exhaust or ventilation for such fumes is provided. Suitable ventilation should be provided for possible fumes or gases such as carbon monoxide, which may be generated by the appliances themselves. Safety equipment as designated in NAVEXOS P-422, *Safety Equipment Manual* shall be worn while handling molten metal.

1217. LIQUEFIED PETROLEUM GAS TORCHES AND FURNACES

Torches and furnaces fired with petroleum gases are preferred to those fired by gasoline because of the fewer hazards. However, liquefied petroleum gases, which are composed of propane, propylene, butane, or butylene, present a hazard comparable to that of any flammable natural or manufactured gas and in addition they are heavier than air. Therefore, there must be adequate ventilation of spaces in which the gas is used. Precautions shall be taken to assure that control valves are tightly closed after use and that there are no leaky valves or connections.

SEWAGE AND WATER TREATMENT PLANTS

1220. INTRODUCTION

The operation of sewage and water treatment plants is a hazardous occupation fraught with dangers from noxious gases and vapors, physical injury, and infections. Work should be carried on only under the supervision of an experienced workman or operator who is trained in first-aid and familiar with all the occupational hazards of the work. Procedures and safety precautions prescribed in NAVDOCKS MO-210, *Maintenance and Operation of Water Supply Systems* and MO-212, *Maintenance and Operation of Sewage and Industrial Waste Systems* are applicable.

1221. HOUSEKEEPING

1. **General.** Every effort shall be made to promote good housekeeping at sewage and water treatment plants. Tools shall be picked up, manhole covers promptly replaced, and walkways kept free from greases and oil. The sidewalks of influent and effluent channels, baffles, weirs, launders, and tanks shall be kept clean by hosing, scraping, or brushing. Channels shall be kept free of solids. Dead ends and corners shall be brushed, and all accumulations removed. Icy walks shall be covered with sand.

2. **Fire Prevention.** Sewage treatment plant workers shall never smoke, drop lighted matches, burn tobacco, use open flames (such as pavement asphalt heaters) in or around sewers, screen chambers, sludge digesters, or sewage settling tanks. An ignition spark can even be created while removing manhole covers.

3. **Electrical Apparatus.** Switchboards shall not be used as clothes racks. Special care shall be taken not to work around electrical apparatus or wiring with wet hands, or in wet shoes or clothes.

1222. OPEN TANK PRECAUTIONS

1. **Swimming Requirements.** Workmen on night watch or otherwise required to perform duties alone around open tanks of sewage and water treatment plants shall be required to be capable of swimming at least 100 feet while dressed in the usual type of work clothing.

2. **Lifelines.** When an employee is performing any duties inside the tank guard rail, he shall wear a safety belt and lifeline attached to the guard rail.

3. **Guard Rails and Ladders.** Guard rails shall be maintained around all open sewage and water treatment plant open tanks. Hand holds or suitable ladders shall be maintained on one side wall of each open tank. Suitable hand rails six to twelve inches above the water line shall be maintained on each side of open tanks.

1223. PERSONAL PROTECTION

1. **Work Clothes.** Wearing coveralls, or a complete change to work clothes, is recommended during working hours.

2. **Gloves.** Workmen in sewage treatment plants and sewage pumping stations shall wear rubber (synthetic type) gloves to prevent infection while cleaning clogged sludge pumps and while handling screenings, sewage grit, or other filth. Glove protection is particularly important when the hands are chapped or burned, or the skin broken from any wound.

3. **Rubbers.** Rubbers or boots should be worn to keep feet clean and dry while doing sludge pumping and other chores.

4. **Lamps.** Permissible electric explosion-proof lights or flash lights should be used in deep, dark manhole shafts to prevent physical injuries.

5. **Safety Belts.** Personnel entering deep sewers, where removal in case of injury would prove difficult, shall always wear a safety belt and lifeline.

1224. PERSONAL HYGIENE

1. **Contact With Filth.** It is always wise to avoid actual contact of the hands with sewage, sludge, or other filth.

2. **Contamination by Hand.** Hands must be kept out of the nose, mouth, and eyes. Before eating, hands should be washed thoroughly with plenty of soap and hot water. The finger nails should be kept short and foreign matter removed with a knife, nail file, or stiff soapy brush. Contaminated ends of cigarettes or cigars, or smoking pipes also may introduce infectious material into the mouth.

1225. SAFETY EQUIPMENT

Sewage and water treatment maintenance workers should be provided with the following safety equipment as applicable and in numbers as required:

Equipment	*Use*
Portable air blower (gas-motor or electric-motor operated, see article 1227).	Ventilating manholes and other enclosed subterranean structures.
Electric explosion-proof light.	Illumination in tanks and sewers where gas may be or is present.
Safety belt and life-line.	For entering deep manholes or tanks.
Hose mask.	Respiratory protection in all gas and vapor atmospheres including oxygen deficiency.
Type N canister gas masks.	Respiratory protection for low concentrations of any gas, including carbon monoxide, provided the atmosphere contains sufficient oxygen to support life.
Chlorine canister masks (at plants employing chlorination)	Respiratory protection against chlorine gas leaks.

1226. RESPIRATORY PROTECTIVE APPARATUS

1. **Stowage.** Masks and filters should be kept in accessible locations, but in quarters segregated from probable gas hazards.

2. **Practice in Use.** Personnel directed to use this equipment should practice regularly with it in order to become proficient in putting it on quickly and to become accustomed to breathing through it.

3. **Uses of Various Types**

a. **Canister Gas Masks.** This type of equipment is effective for use in low concentrations of specific gases (such as average chlorine leaks), smokes, vapors and dusts, provided the atmosphere contains sufficient oxygen to support life. The type N all purpose or universal canister gas mask is used for low concentrations of any gas, including carbon monoxide, provided the atmosphere contains sufficient oxygen to support life.

b. **Self-Contained Oxygen Breathing Apparatus.** This is effective for limited time use against any poisonous gas or oxygen deficient atmosphere, such as when inspecting long, large sewers where a hose mask would be impractical.

c. **The Hose Mask.** This equipment can be used for an unlimited time against any poisonous gas or oxygen deficiency.

1227. PORTABLE VENTILATING EQUIPMENT

Portable blowers equipped with vapor-proof, totally-enclosed motors or non-sparking gas engines, should be used when ventilation of tanks, pits, and manholes is necessary. When employed they should be placed on the leeward side of the manhole and not less than 6 feet from the opening. Compressed-air-driven equipment is also safe for use in such locations. When needed, ventilation should be continued in operation while the work progresses, and tests for the presence of dangerous gases or oxygen deficiency should be made at intervals during the time, as well as before, the work is done.

1228. ILLUMINATION

If illumination is required in sewers, pumping station receiving wells, or tanks where flammable gases may be present, permissible electric cap lamps should be worn if

available. Approved explosion-proof flashlights and extension electric lights with heavily insulated cords may be used.

1229. WARNING SIGNS

1. Hazardous Areas. Warning signs shall be installed near dangerous machinery and blind obstructions, and for any hazardous locations where stumbling may occur.

2. Fire Prevention. Warning signs, properly placed, should be used to ban all smoking and open lights in the vicinity of sludge tanks, septic tanks, and sewage conditioning bins. Signs warning against open flames should also be used in sludge digestion tank galleries and in rooms where sludge gas piping and safety devices are located.

3. Manhole Protection

a. Warning Signs and Guards. When a manhole is opened, a man with a red flag or a red lantern shall be assigned as a guard to warn pedestrians and vehicular traffic. Barricades with suitable warning signs (such as DANGER, MEN WORKING, OPEN MANHOLE, etc.) shall be erected around the manholes. At night, open manholes must be protected with four red lanterns placed about twenty feet away from each other around the manhole in a square formation, with one lantern located about 10 feet ahead of the opening so as to be easily discernible by approaching traffic.

b. Manhole Cage. A manhole cage over the shaft should be provided for protection to the workmen in the sewer because it affords them a handhold in descending and ascending the manhole shaft.

1230. SEWER MAINTENANCE

1. Ladder Testing. Workmen descending a manhole shaft to inspect or clean sewers shall try each ladder step or rung carefully before putting their full weight on it to guard against insecure fastening due to corrosion of the rung at the manhole wall.

2. Helpers for Emergency. When work is going on in deep sewers at least two men shall be available for lifting workers from the manhole in event of serious injury.

1231. ENTERING DEEP SEWERS

1. Procedures. When entering a large or deep sewer or underground structure where dangerous gas or an oxygen deficiency may be present, sewer maintenance crews shall follow these procedures:

a. Do not allow smoking or open flames, and guard against sparks.

b. Erect warning signs.

c. Use only safety gas-proof electric lighting equipment.

d. Test the atmosphere for noxious gases and oxygen deficiency.

e. If the atmosphere is normal, allow workmen to enter with a safety belt attached and with two men available at the top. For extended jobs, the gas tests should be repeated at frequent intervals, depending on circumstances.

f. If oxygen deficiency or gas is found, ventilate the structure with pure air by natural or artificial means. The gas tests should be repeated and the atmosphere cleared before entering. Adequate ventilation must be maintained during this work, and the tests frequently repeated.

g. If gas or oxygen deficiency is present and it is not practical to ventilate adequately before workers enter, use a hose mask and take extreme care to avoid all sources of ignition. Workers should be taught how to use the hose equipment. In these cases they should always use permissible safety lights (not ordinary flashlights) and wear rubber boots or nonsparking shoes.

2. Assignment of Workers. Work in flammable gas atmospheres is extremely hazardous; it should never be attempted except by those thoroughly familiar with the dangers and fully equipped with the proper protective safety equipment.

1232. PURGING SLUDGE HOLDER

1. Before Entering. Before entering a digester tank which has been emptied, make sure that it has been purged with live steam or CO_2 and then thoroughly ventilated.

2. Procedure. When purging sludge gas holders, the bottom entrance manhole cover

should be removed and the gas vented to the atmosphere through all available openings in the top. All sources of possible ignition for the gas mixture should be carefully controlled during this operation. A combustible gas indicator should then be employed to check the tank atmosphere before entering.

1233. CHLORINE LEAKS

1. **Respiratory Apparatus.** No one should knowingly enter a room into which chlorine is leaking unless he is wearing a chlorine gas mask, a self-contained oxygen breathing apparatus, or a hose mask.

2. **Conduct in Presence of Chlorine.** When chlorine is noticed in the atmosphere workers should avoid panic, refrain from coughing, keep the mouth closed, avoid deep breathing, keep the head high, and withdraw at once from the affected area. The gas mask or oxygen breathing apparatus shall then be put on and the room reentered to shut off the leak if that is possible.

3. **Persistent Leaks.** The handling of a persistent chlorine leak in a plant is best left to the chlorine supplier.

4. **Handling Chlorine Cylinders.** Workmen shall handle chlorine cylinders with care. Rough handling of cylinders shall not be tolerated. Workmen should not tamper with the valve or apply flame, steam, or hot water to it, or place the cylinders near steam pipes or radiators. When using these cylinders they should open the valve slowly, leaving the special wrench in place, and close the valve when the cylinder is empty. Instructions in the use and care of cylinders shall be observed.

1234. FIRST AID FOR CHLORINE POISONING

1. **Measures to Be Taken.** Should any of the plant personnel become seriously affected by chlorine gas, or be overcome by its action, the following steps should be taken:

a. Call a physician.

b. Remove the affected person at once to open air and away from gas fumes.

c. Place the patient flat on his back with his head slightly elevated. Keep him warm, and do not excite him.

d. If the patient is conscious, give him one-half teaspoonful of essence of peppermint, or a moderate stimulant. Do not give him milk as milk or cream will usually curdle in the stomach and cause vomiting, which adds to the discomfort of the patient.

e. Insofar as he is able, the person affected should resist the impulse to cough.

f. If the patient is unconscious and not breathing, apply artificial respiration.

1235. PIPING IN TREATMENT PLANTS

1. **Cross Connections.** Cross connections between the drinking water supply and the sewage or sludge piping or the equipment in sewage and water treatment plants are prohibited. Continuous diligence must be exercised to avoid making such connections.

2. **Temporary Piping or Hose.** Temporary water flushing pipes or hose shall not be allowed to remain connected with sewage or sludge pipes or tanks after use.

Chapter 13
PAINTING

GENERAL

1301. FIRE HAZARDS

The use of paints, varnishes, lacquers, cleaners, solvents, and other finishing materials containing flammable solvents readily ignitable at comparatively low temperatures involves a marked fire hazard. Liquids containing volatile flammable solvents exposed to evaporation form flammable vapors which, if not cared for by adequate ventilation, may form explosive or flammable mixtures with air. The National Fire Protection Association Inspection Manual and Chapter 20 shall be used as a guide in handling, storing, and using flammable liquids.

1302. CONTAMINATION OF AIR

Vapors and gases from cleaners, solvents, and paints frequently have a harmful toxic effect on the human system. Every precaution should be taken to prevent excess contamination of the air by solvent vapors. This applies to tank-type cleaners, lacquer thinners, benzine, naphtha, paints, solvents, etc.

1303. PAINT STORAGE

Containers holding paints, varnishes, lacquers, removers, thinners, cleaners, or any volatile solvents shall be kept tightly closed when not in actual use. They shall be stored in a separate building or in a fire-resisting room which is well ventilated and where the paint material will not be exposed to excessive heat, smoke, sparks, flame, or the direct rays of the sun. Wiping rags and other flammable waste material shall always be placed in tightly closed metal containers, and the containers must be emptied at the end of a day's work. Painters' overalls should be hung in metal lockers.

1304. PAINT REMOVAL WITH TORCH

Removal of paint by torch is prohibited.

1305. TOXIC AND POISONOUS SUBSTANCES

Good habits of personal hygiene will prevent lead poisoning. Certain paints and organic solvents irritate or burn the skin and should be handled with approved gloves. See 1311.

PAINTING

1310. PAINTING AREA

1. **Mixing Paint.** Painters should have detached shops or temporary structures where all paint should be mixed, and where paint buckets, brushes, and rags can be kept at the end of the day's work. Only the quantity of oil or paint needed for one day's work shall be taken into the building being painted. Paint mixing and storage shops other than structures of temporary nature should be protected by automatic sprinklers.

2. **No Smoking.** Signs reading "No Smoking Allowed In or Around This Building" should be posted conspicuously inside and outside each paint shop or other building in which paint is used or stored. No open flame of any kind shall be allowed near paint-mixing operations.

3. **Ventilation.** Forced draft ventilation should be provided for personnel engaged in scaling, brush painting, spraying, and in using paint removers.

4. **Aloft or Overside.** Before painting, inspect scaffolding and rigging for safety. Lifelines should always be worn on this work, with the lifeline secured. When brush painting from ladders, the paint bucket should be hung from a ladder rung with a suitable hook, and the painter shall hold onto the ladder with one hand. See Chapter 8 of this publication for precautions on scaffolds and ladders.

5. **Housekeeping.** Good housekeeping must be especially stressed where painting work is being done.

1311. HEALTH HAZARDS AND PROTECTIVE EQUIPMENT

1. **Medical Examinations.** Painters must continuously observe good habits of personal hygiene to avoid the health hazard of lead poisoning. Medical examinations of painters should be conducted periodically in the course of continued work with toxic paint materials. (See NCPI 792.)

2. **Respirators.** Chemical cartridge type paint-spray respirators shall be worn when it is necessary to work in harmful concentrations of fumes or vapors. In confined spaces where the possibility of reduced oxygen content may occur, airline type respirators or self-contained breathing apparatus shall be used.

3. **Thorough Washing.** Strict adherence by painters to a system of good personal hygiene in washing with the proper type of soap or detergent, eating, drinking, etc., will practically eliminate the possibility of lead poisoning. Painters should be particularly careful to keep dirty fingers out of the mouth and away from food and other substances going into the mouth. Painters should always wash hands, arms, and face with warm water and soap before eating.

4. **Gloves.** Rubber gloves should always be worn when handling cleaning compounds, thinners, paints, removers, or other materials that may irritate the skin. A protective cream should be used on exposed parts of the skin to act as a barrier and to facilitate cleaning after painting. This will eliminate the need for using irritating solvents.

5. **Life Jackets.** Each man shall wear a properly fitted life jacket when working in a precarious position near or over water, or at an elevated position, with a lifeline of such length (no more than 2 feet of slack) that the jolt from a fall would not injure him. Since injuries to painters often result from the improper use of ladders and scaffolds, personnel should also observe the precautions given in Chapter 8.

6. **Antifouling Paint.** Care shall be taken not to get any plastic antifouling paint on the face, hands, or clothing, as it will burn the skin. Masks and gloves shall always be worn when using this kind of paint.

1312. SPRAY PAINTING

The following precautions cover the more essential requirements for safe paint spraying operations. National Fire Protection Association pamphlet No. 33, *Spray Finishing Using Flammable Materials*, gives more details on the equipment, operation, and maintenance of paint spraying facilities which should be followed wherever practicable.

1. **Dangers.** The application of paints, varnishes, lacquers, enamels, wood bleaching liquids, and other flammable liquids by the spray process is more hazardous than brush applications because of the volume and concentration of the work and because spraying produces a residue of flammable character and deposits which are subject to spontaneous ignition. Health hazards due to the presence of potentially harmful substances such as lead, benzol, and silica may also be present in paint spraying operations.

2. **Ventilation.** To insure immediate removal of vapors and waste residues from spraying operations, complete ventilation of the room is essential. However, adequate ventilation may and usually does require positive means in addition to natural ventilation.

A system balanced so as to provide fresh air supply as well as exhaust is therefore recommended. Ordinarily the ventilation necessary for the health and comfort of the operators is sufficient also to remove flammable vapors.

3. **Protective Clothing.** Operators of spray machines shall wear protective garments which fit snugly at the ankles, neck, and wrists. They shall wear gloves, and approved filter-type respirators while spraying or when mixing dry colors or using other finishing materials which create flammable vapors. They should never inhale the mist from the spray gun.

4. **Showers.** Where paint-spraying operations are conducted extensively, showers should be installed close by and the employees should use them after every shift.

5. **No Smoking.** Smoking is prohibited in rooms where spray guns are in operation. The presence of any open flame is forbidden in such locations.

6. **Electrical Equipment.** Electrical equipment in rooms where paint-spraying or extensive paint mixing operations are carried on, or where large quantities of paints are stored, should be installed in accordance with Class I, Group D requirements of the National Electrical Code.

7. **Fire Fighting.** Spray machine operators are to be informed of the location of the nearest fire-fighting equipment, and they must know how to use such equipment.

8. **No Loitering.** Only authorized personnel shall be allowed in spray painting rooms.

9. **Spray Booths.** Where paint spraying operations are regularly conducted inside a building or structure, a standard metal spray booth with an exhaust system using type D motor should be provided which complies with the requirements of the National Board of Fire Underwriters.

a. **Cleaning Booths.** Compressed air or flammable liquids should not be used for cleaning these booths.

b. **Sprinklers.** Every spray booth should be provided with automatic fire-extinguishing system. If the sprinklers are subject to loading by paint deposits they should be cleaned frequently.

10. **Cleaning Spray Guns.** Spray guns, paint containers, and hose must be thoroughly cleaned after use but should never be cleaned in confined areas.

1313. BITUMINOUS AND PLASTIC COATINGS

1. **Hazards.** There are two types of coatings generally used to protect surfaces against saltwater corrosion. The bituminous type (asphaltic, coal tar) have a volatile vehicle which has toxic and combustible properties. The plastic coatings (chlorinated vinyl resins and other plastics) also have toxic and combustible properties. Although the volatile vehicle of the plastic coatings generally have more severe toxic properties, many of the same safety precautions are applicable to both types.

2. **Confined and Unconfined Application.** The following precautions shall be observed in applying these coatings both in confined spaces such as the interior of ballast tanks and in the open.

a. **Protective Apparel.** Legs shall be protected below the knees by approved leggings of canvas material. Shirts must be kept buttoned at the neck and the sleeves rolled down. Leather gauntlet gloves shall be worn. Approved goggles shall be worn except where eye protection is provided by air-supplied respirators or hoods. Exposed areas of the skin should be covered with a protective cream.

b. **Hoods.** Where these coatings are applied overhead or on surfaces above waist level of the workmen, approved hoods which completely protect the head, face, and neck shall be worn.

c. **Open Flame.** No smoking or welding or other open flames will be permitted in enclosed spaces, or within 50 feet of the place where these coatings are being applied. The restricted area shall be clearly designated by suitable light barricades and warning signs reading: "DANGER, NO SMOKING."

d. Mixing. Coatings shall be prepared in enclosed mixing equipment located in an open or well-ventilated space. The area shall be barricaded for a distance 30 feet each way from the mixing equipment and "danger—no smoking" signs.

e. Maintaining Watch. A continuous watch should be maintained during application of these coatings, to ensure that all safety precautions are observed.

f. Grounding. All spray guns shall be grounded and the ground leads shall be taped to the spray gun where practicable to discharge static accumulations.

g. Respirators. Chemical cartridge respirators, protecting against organic solvent vapors, shall be worn by all persons working within 15 feet of either mixing or coating operations, except where coating is done in confined spaces, where air-supplied hoods or respirators shall be used.

h. Accidental Ignition. Extreme care shall be taken by persons engaged in preparing and applying these coatings to eliminate all possible sources of ignition (matches, cigarette lighters, steel buckles, etc.) from their persons. Workmen shall wear canvas boots over their shoes or shall wear rubber footwear where they must stand on steel decking to apply the coatings. Plastic clothing shall not be worn. All loose steel objects shall be removed from the immediate vicinity of the coating operations.

3. Application in Confined Spaces. In addition to the precautions given in paragraph 2 above, the following precautions shall be observed when applying bituminous and plastic coatings in confined spaces such as interiors of ballast tanks.

a. Forced Ventilation. During coating operations all tanks shall be properly force-ventilated.

b. Vents. Where the venting of the vapors given off by the coatings will create an explosion hazard outside the compartment being coated, water curtains shall be installed at the vents and ventilation shall be continued for at least one hour after the coating operation has been completed and until vapor concentrations remain below those prescribed for the materials involved.

c. Respirators. Air-supplied respirators shall be worn by all personnel working in enclosed spaces where these coatings are being applied.

d. Sparks. Coating operations shall not be conducted in enclosed spaces where spark-making apparatus is in use. All electrical equipment except explosion-proof types shall be shut down and all electrical circuits deenergized.

e. Gas-Free Testing. Frequent gas-free tests shall be conducted in accordance with the procedures stipulated in Chapter 20.

f. Portable Lights. Portable lights shall be hung on stiffeners by means of insulated hooks and never wrapped around or dropped over supports.

1314. RUST-PREVENTIVE COMPOUNDS

1. Ventilation. When cleaning and spraying with rust-preventive compounds special care shall be taken that working spaces are always well ventilated.

2. Open Flame. Smoking, welding, oxyacetylene burning, or any other operation involving open flames or sparks, shall not be allowed in the same compartment where rust-preventive compound is being used. In the open air, burning shall not be carried on within 20 feet of spraying.

3. Preventing Electric Sparks

a. Shoes. Only nonsparking shoes should be worn by personnel working with rust-preventive compounds.

b. Equipment. Only explosion-proof electrical equipment shall be operated in such places.

c. Grounding Spray Gun. A spray gun used for spraying rust-preventive compounds shall be grounded to eliminate any generated electro-static charge.

4. Personnel Protection

a. Ointment. Protective cream or ointment should be applied to parts of the body which are exposed to contact with these vapors.

b. **Apparel.** Protective gloves shall be worn when applying cleaning liquid or when spraying, brushing, flushing, or dipping with the compound.

c. **Respirators.** When using rust-preventive compounds in a confined or poorly ventilated space, an air-supplied respirator shall be worn. When spraying, brushing, flushing, or dipping with this compound in the open air, a chemical cartridge respirator shall be worn.

1315. PAINTING BY DIPPING

1. **Hazards.** Painting by dipping objects in tanks of paint, enamel, varnish, etc., involves the hazard of exposed surfaces of flammable liquids and the evaporation of solvents.

2. **Ventilation.** Complete ventilation of the area in which dipping operations are carried on is essential. Dipping should preferably be carried on in a detached building or a cut-off section; it should not be conducted in spaces where ventilation is difficult to obtain.

3. **Tank Covers.** Small dip tanks can be protected by automatic-closing covers. Such covers should be held open either by a fusible link or by some form of thermostatic device designed to close the cover and cut off the air supply in case of fire.

4. **Overflow Pipes.** Overflow pipes should be provided for all dip tanks to prevent spillage and designed so that the contents of the tank can in the event of an emergency be drained to an underground tank located outside the building.

5. **Drain Boards.** Drain boards on which the surplus finish drips from articles leaving the dip tank are a point of hazard and should be included in the protection for the tank.

6. **Open Flame.** No smoking or open fires shall be permitted in areas where paint dipping operations are conducted. Only standard methods of heating shall be employed in such areas. The National Fire Protection Association *Standard for Dip Tanks Containing Flammable or Combustible Liquids* gives detailed requirements for safeguarding this process.

1316. CLEANERS AND SOLVENTS

Solvents and cleaners used in connection with painting operations are comprised of a variety of types of compounds including hydrocarbons, acids, alcohols, caustic materials, and chlorinated compounds. Many of these are hazardous. Such materials shall be handled and stored with due regard to their particular properties concerning toxicity and flammability in accordance with the precautions provided in Chapter 20.

ABRASIVE BLASTING

1320. GENERAL

1. **Abrasive Machine.** The abrasive-blast machine (sometimes referred to as a pot, sand tank, pressure tank, etc.) is a pressure vessel, either single or double, utilizing compressed air and abrasive material, which may be either wet or dry.

2. **Care of Equipment.** As a result of weakness developed by corrosion or from structural damage caused by handling or flying objects, explosion may occur. Adequate maintenance of equipment is basic to the safe operation of abrasive-blast machines. Careful attention to control valves, hose, nozzles, and the strict adherence to correct operating procedures on the part of the operator will prevent accidents.

3. **Work Area.** Abrasive workrooms must be adequately lighted with vapor-proof lights, and have emergency escapes installed on the doors.

4. **Dry Abrasive Blasting.** Dry abrasive blasting carried on inside a building shall be done in completely enclosed booths.

564-350 O - 74 - 17

5. **Hazards.** The chief dangers to personnel are:

a. explosion
b. breathing abrasive material
c. bodily contact with abrasive stream
d. surges in the sandblast line.

1321. PROTECTIVE CLOTHING

1. **Specifications.** Protective equipment and clothing for abrasive blasting is described in the *Safety Equipment Manual,* NAVEXOS P-422.

2. **Apparel.** All blasters shall wear hoods, masks or air helmets of the positive pressure type, steel-toe boots or shoes, rubber or leather gauntlet gloves, and appropriate clothing.

3. **Safety Belts.** Blasters working on staging or other elevated places or platforms shall wear safety belts whenever adequate safeguards against falling, such as guard rails, cannot be provided.

4. **Hats.** Blast-cleaning machine operators shall wear hard hats, goggles, and respirators.

1322. SPECIAL FEATURES OF EQUIPMENT

1. **Air Washer.** This device is a sheet metal chamber of any desired size and shape, to be used with fan duct systems. It is equipped with either a water spray, which will clean the air of coarse dust particles, or steam spray, which will wash out fine dust particles so small as to be virtually invisible. Steam ejectors may be used in lieu of fans in a duct system and in this case a water spray chamber both at the suction and discharge ends of the ejector will wash out all of the dust in the dusty air stream.

2. **Automatic Safety Shut-Off.** The nozzle end of blasting hoses shall be equipped with a control device that will stop air pressure and abrasive material from entering the blasting hose when the control is released. The device shall incorporate the *dead-man* control principle.

3. **Nonstatic Hose.** Nonstatic hose should be used to prevent shocks from static electricity.

4. **Whip Hose.** A short length of flexible hose between the nozzle and the relatively stiff abrasive-blast hose is generally used to enable the blaster to bend the hose and point the nozzle toward the work at the necessary angle. This short hose must be able to withstand bending under pressure and have good wearing qualities. When bent, the hose will wear unevenly; frequent and thorough inspection is necessary to insure replacement of the hose before an unsafe amount of wear has taken place.

5. **Hose Couplings.** Hose lengths should be joined by metallic couplings secured to the outside of the hose to avoid erosion and weakening of the couplings. Couplings should be so designed as to allow ready joining of the hose lengths and should preferably be of aluminum for light weight.

6. **Nozzles**

a. **Attachments.** Nozzles must be attached to the hose by a fitting that will positively prevent the nozzle from becoming disengaged and flying through space like a missile. Nozzle attachments shall be of metal and shall fit onto the hose externally.

b. **Regulators.** Nozzle and fitting designs that allow regulations of the air-abrasive stream during blasting are considered unsafe, and shall not be used.

c. **Handling.** Nozzles are usually brittle and striking anything with the nozzle or dropping it should be avoided.

1323. BODILY CONTACT WITH ABRASIVE

1. **Direction of Nozzle.** Be alert to prevent the air-abrasive mixture from being directed against the blaster himself or another person. Never point the nozzle in the direction of another person, even with the air and abrasive shut off.

2. **Hands.** All abrasive-blasters should keep hands and other parts of the body away from the discharge end of the nozzle, including times when the abrasive stream is shut off or temporarily clogged.

3. **Adjusting Nozzle.** Do not attempt to tighten or loosen the nozzle while the abrasive is flowing.

1324. HOSE BREAKAGE

Inspect hose frequently and replace that which shows an unsafe amount of wear. Breakage of the hose, either as a complete separation or through wear, might cause bodily contact with the abrasive stream, and a complete separation in the hose may cause it to whip about and strike a person.

1325. DUST

1. **Hazards.** Dust from removed rust, scale, and paint is a menace to machinery and to the health of persons in the vicinity. Abrasive slag grit or equivalent should be used whenever practicable (such as in extensive, continuous, or repeated blasting operations) since it is practically silica-free and less injurious to personnel. Where sand is used, the following precautions shall apply:

a. All personnel engaged in this work shall be equipped with approved air line respirators and shall be given periodic physical examinations in accordance with NCPI 792, enclosure 1.

b. Personnel engaged in work in the vicinity of sandblasting operations shall wear an approved dust respirator.

c. Warning signs marking out the danger area shall be posted. They shall state: DANGER–SANDBLASTING, ALL WORKING NEARER SANDBLASTING THAN THIS SIGN MUST WEAR A DUST RESPIRATOR

2. **Liquid Hose Line.** Dust from blasting of ships' hulls should be suppressed by the use of the rust-inhibiting liquids, fed into the hose at the blasting machine or sprayed from a spray nozzle, concentric with and attached to the abrasive nozzle and fed by a separate liquid line.

3. **Suction Ducts.** Dust generated by dry blasting of closed spaces aboard ships should be withdrawn by adequate suction ventilation ducts and fans. The dust in the air stream should be washed out in air washers before the air is expelled into the atmosphere.

1326. SURGES IN ABRASIVE-BLAST LINE

1. **Danger.** Surges in the line can result in recoil action at the nozzle, of sufficient proportions to knock a man from a staging or wrench the hose from his grasp.

2. **Surges.** Surges are caused by interruptions of the air supply, irregular feeding of abrasives and liquids into the line, and by improper manipulation of the valves at the machine. This is especially likely to occur during changeover from an empty abrasive tank to a full one.

1327. COMMUNICATION

Adequate means of communication between the blaster and the machine operator shall be maintained. Telephone communication, preferably the sound powered telephone (or other direct electronic voice transmitting devices), shall be used.

1. When blaster and machine operator are clearly in sight of each other, well defined and understood hand signals may be used.

2. Other signaling devices such as horns and electric lights are not recommended.

1328. STAGING

1. **Rigidity.** Abrasive blasters, being enclosed completely in protective clothing, are restricted in freedom of movement and in ability to see. Furthermore, the blasting hose is stiff to maneuver and has considerable weight. It is important, therefore, that any staging on which the blaster must work should be as firm, rigid, and steady as possible.

2. **Specifications.** Staging should be at least 24 inches wide and wherever practicable shall be equipped with guard rails (see Chapter 8).

3. **Suspended Type.** On suspended staging, all lines should be inspected daily. Chafing gear should be used where lines are in contact with metal parts. See Chapter 8 for use of suspended scaffolds.

4. **Bumpers.** Bumpers or spawls should be used to hold the staging away from the

work (approximately 12 inches). Staging should be arranged for convenience and ease in adjusting height.

5. **Lifelines.** Lifelines should not be attached to suspended staging but should be secured from a rigid point.

1329. MACHINE OPERATION

1. **Changing Tanks.** Open and close valves in proper sequence to change over from an empty abrasive tank to a full one. Bleed out the air in the tank before refilling. Reestablish the air pressure after refilling with abrasive.

2. **Tending Control Valves.** Make sure that during blasting the valves are adequately tended in order to maintain proper mixture of abrasive and liquid. Be alert to close valves promptly if danger develops.

3. **Compressed Air Equipment.** Accumulators, filters, and/or water separators used with compressed air must be constructed and tested in accordance with code for pressure vessel as outlined in Chapter 7.

1330. HIGH PRESSURE AIR FLASKS

Special care must be taken when sandblasting operations are performed in the vicinity of high pressure air flasks. In order to prevent injury to personnel and damage to equipment, air flasks and associated piping in submarine tanks shall not be charged while sandblasting is in progress. The air flasks and piping shall be bled down and secured before sandblasting operations are commenced. Sandblasters shall be instructed in the precautions necessary to avoid damaging high pressure air system with sandblasting equipment.

Chapter 14

PORTABLE TOOLS

HAND TOOLS

1401. DEFINITION

The term tools as used in this section shall be understood to mean any small tool or device normally operated by hand.

1402. GENERAL PRECAUTIONS

1. **Standards.** All tools shall conform to Navy standards as to quality and type, and shall be used only for those purposes for which they were intended.

2. **Good Repair.** All tools in active use shall be maintained in good repair, and all damaged or nonworking tools shall be turned in to the toolkeepers.

3. **Authorized Personnel.** No tools shall be issued to or used by personnel not authorized to use them.

4. **Dressing Tools.** Toolkeepers shall issue only those tools they know to be safe. No shock tool with a mushroom head shall be permitted to leave the tool room; all cold chisels, chisel bars, cutters, or other shock tools with chipped, cracked, or mushroomed heads shall be dressed in accordance with standard practice before they are issued.

5. **Protection of Edges.** Toolkeepers shall give particular attention to keeping the jaws of wrenches in good condition, keeping sharp edged tools sharp, and protecting the sharp edges while tools are in storage.

6. **Ammunition or Explosives.** On work involving ammunition or exposed explosives, only tools specified in Bureau of Naval Weapons publications pertaining to the ammunition or explosives shall be used.

7. **Inspection.** Portable electric and pneumatic tools shall be kept in the best possible condition, with frequent checking of switches and control valves, electric cord and hose connections.

8. **Temper.** If a tool shows signs of being improperly tempered, the toolkeeper shall withdraw it from service, find the trouble, and have it corrected.

9. **Grinding Wheels.** If a grinding wheel has been abused, the toolkeeper shall give it the "ring test." Toolkeepers should know the safe speeds for abrasive wheels and how to mount and adjust them. Grinding wheels shall be stored in such a manner that mechanical shock will be held to a minimum.

10. **Sharp Tools.** Sharp edged tools shall not be carried unsheathed in tool bags, tool boxes, or in clothing pockets.

11. **Plastic Handles.** Plastic tool handles shall be of the non-flammable type.

1403. AXES, ADZES, HATCHETS

1. **Inspection.** Axes, adzes, and hatchets shall be inspected before being used; the handle shall be tight in the head, sound, and uncracked; blades shall be sharp and free of defects.

2. **Direction of Cut.** Cuts made with any tool having a cutting edge shall be made in a direction away from the body whenever possible.

3. **Protection of Fellow Workers.** No one shall work with an axe, adze, or hatchet without first making certain that all fellow workers are at a safe distance. No one shall cut toward a fellow worker.

4. **Passing Handle First.** In passing a tool to someone else, the worker shall pass the handle first, keeping a firm grip on the

head until the other person has a secure hold on the handle.

5. **Stowage.** Sharpened tools are to be stowed so that their edges will be protected and will not endanger personnel.

1404. BRACES AND BITS

1. **Good Condition.** The jaws of the brace chuck shall be kept in good condition, the gripping edges sharp and clean. Bits shall be kept well sharpened and clean.

2. **Tightening Chuck.** A wrench or pliers shall not be used to tighten the chuck of the brace.

3. **Bit Firmly Gripped.** The bit shall be firmly gripped in the brace.

4. **Bit Breaking Through.** Care shall be exercised to prevent the bit from suddenly breaking through the material being worked.

1405. CHISELS, PUNCHES, DRIFT PINS

1. **Condition.** A burred chisel or a hammer with a mushroomed head shall not be used. If a cold chisel is not properly tempered or sharpened for the job or the head not properly chamferred, or if defective in any way, it shall not be used.

2. **Holding Chisel.** Cold chisels shall be held in the safest way possible–between the thumb and other four fingers; on horizontal cuts the palm should be up.

3. **Protection from Flying Chips.** Goggles shall be worn by persons using cold chisels. Other persons nearby shall wear goggles or shall be protected from flying chips by screens erected around the work.

4. **Handles of Chisels.** Handles of wood chisels shall be free of cracks and other defects and shall not be mushroomed. Wood handles should be fitted with a 1/2 to 3/4 inch wide metal band to prevent splitting.

5. **Cupping Chisel in Palm.** When cutting by hand with a wood chisel, the chisel handle shall be cupped in the palm of the hand and pressure exerted away from the body.

6. **Making Cut.** All cuts shall be made away from the body.

7. **Working Close to Others.** Care shall be taken that no other person is close enough to be injured if the chisel should slip or get away from the user.

8. **Punches and Drift Pins**

a. **Condition.** Punches and drift pins shall be kept in good condition and shall be properly tempered and dressed.

b. **Strike Sharply.** Punches and drift pins shall be struck sharply and squarely; they shall be held firmly.

1406. DRILLS

1. **Condition.** Only straight, undamaged, and properly sharpened drills shall be used.

2. **Chuck.** The chuck shall be tightened securely with the key provided. Wrenches or pliers shall not be used on any chuck. Drill shall be straight and true in chuck.

3. **Work Firmly Clamped.** The work shall be firmly clamped and, if of metal, a center punch shall be used to score the material before the drilling operation is started.

1407. FILES, RASPS

1. **Handles.** Every file or rasp shall be equipped with a securely-fitted, substantial handle.

2. **Filing Close to Chuck.** Filing work close to the chuck in a lathe shall be done left-handed.

3. **Striking Rasp.** A file or rasp shall never be hit. It shall be tapped gently against a block of wood to clear it. A steel wire brush should be used to clean files.

4. **Prohibited Uses**

a. An old file or rasp shall not be used to make a punch or chisel.

b. A file shall never be used as a pry or lever.

5. **Carrying Files.** No one shall carry a file about his person without a handle over the tang.

6. **Steadying End of File.** The file should always be used with one hand grasping the handle and the other steadying the end of the file.

7. **Holding Against Material.** Files and rasps should be held against the material only on the cutting stroke, never on the return.

8. **Selection of File.** The correct file shall be used for the job; a fine file for fine work, a coarse file for coarse work.

1408. HAMMERS

1. **Selection of Type.** Care shall be used in selecting a hammer suitable for the job. The head shall be wedged securely and squarely on the handle and neither the head nor the handle shall be chipped or broken.

2. **Free of Grease.** The hammer shall be kept clean and free from oil or grease which might cause the handle to slip from the hands or cause the face of the hammer to glance from an object being struck.

3. **Striking.** The handle of the hammer shall be grasped firmly near the end, the eye kept on the point to be struck, and a true blow struck with the hammer face, which is hardened for this purpose. The hammer face shall not be damaged by striking steel harder than the face itself.

4. **Tool Holders.** In using sledge hammers to strike chisels or other similar shock tools, the workman holding the tool shall be provided with a tool holder so that in case the sledge misses the tool, it will not strike the holding workman.

5. **Drawing Nails.** When nails are being drawn with a hammer, after the nail is partly drawn, a piece of wood should be placed under the hammer to increase leverage and reduce the strain.

1409. PIPE CUTTERS

1. **Free of Dirt.** The pipe cutter shall be kept free of chips and dirt.

2. **Oiling.** The cutter shall be oiled frequently while the cut is being made.

3. **Pressure on Wheel.** No wrench, pliers, or other tool shall be used to increase the pressure on the movable wheel.

4. **Method of Cutting.** When a cut is being made, the employee shall cut a short way, then back off to tighten the wheel, and then cut again.

5. **Supporting Pipe.** The end of any long pipe shall be supported during the cutting operation.

6. **Removing Burr.** After the cut is completed, the burr shall be removed from the pipe with a file or reamer.

1410. PLIERS, SIDE CUTTERS, DIAGONAL CUTTERS

1. **Selecting Tool.** Care shall be used in selecting the correct plier or cutter for the work to be performed.

2. **Correct Tool.** Pliers or cutters shall not be used on nuts, pipe fittings, etc. The wrench designed for that particular job shall be used.

3. **Condition of Tools.** The tool shall be kept free from grease and oil and the teeth or cutting edges shall be kept clean and sharp. The fulcrum pin, rivet, or bolt shall be properly oiled and shall be snug but not tight.

4. **Cutting Short Pieces.** When cutting short pieces, take care that they do not fly and cause injury. Protective eyewear shall be worn when cutting short pieces.

5. **Extensions on Handles.** Extensions on the tool handle to increase leverage is prohibited.

6. **Protection of Fingers.** Fingers shall not be wrapped around the handle of a tool in such a way that they can be pinched or jammed if the tool slips from the work.

1411. SAWS

1. **Cutting Across or with Grain.** Only saws that are sharp and properly set shall be used. A crosscut saw shall be used for cutting across the grain; a ripsaw for cutting with the grain.

2. **Guiding Cut.** The saw shall be guided with the free hand when starting the cut; only one or two long, slow cuts upward shall be taken and then the hand shall be removed from the danger zone before the sawing is continued.

3. **Line With Cut.** The saw blade shall be kept in direct line with the cut.

4. **Sticking Saw.** If the saw sticks in wet or gummy wood, a small amount of oil or paraffin may be applied. In severe cases, a wedge may be used to hold the cut open.

5. **Operator's Balance.** The employees shall take care not to be thrown off balance when using one knee to steady the material being sawed.

6. **Hack Saws.** Hack saws should be adjusted in the frame snug and tight enough to prevent buckling. The number of teeth per inch should be selected for the work: 14 for soft, solid metal; 18 for hard metal and general use; 24 for drill rods, short metal, and tubing; and 32 for thin sheet metal and tubing. Pressure should be on the down stroke only, lifting slightly on the back stroke. Twisting the blade or exerting excessive pressure should be avoided.

1412. SPADES, SHOVELS, PICK-AXES

1. **Inspection.** Before the tool is used, it shall be inspected by the worker to be sure that it has a strong, smooth handle and grip free from splinters, checks, and splits, and that the blade is smooth, sharp, and free from twist.

2. **Clearance.** There shall be adequate clearance between men using shovels so that no one will be struck by either tools or material.

3. **Use of Foot.** The area of the ball of the foot, not the instep area, shall be used to press the tool into clay or other stiff material.

4. **Reducing Body Strain.** Unnecessary strain should be avoided by using the leg muscles as much as possible in digging and lifting loads, by being sure of footing, and by keeping the body balanced as much as possible.

5. **Handing Tools.** Tools shall never be thrown or tossed to another person, but shall be handed to him with the handle forward.

6. **Leaving Tools.** A tool shall never be left where personnel may stumble over it or strike against it; it shall be hung up or placed in the corner; the blade of spades and shovels should be struck securely in the ground.

1413. SCREWDRIVERS

1. **Size.** Care shall be taken to select a screwdriver of the proper size to fit the screw.

2. **Handle.** No screwdriver with a split or splintered handle shall be used.

3. **Starting Screw.** An awl auger drill having bit or driver nail shall be used to start each screw.

4. **Point.** The point of the screwdriver shall be kept in proper shape with a file or grinding wheel.

5. **Working from Ladder.** The worker shall be well braced before driving screws from a ladder (see Chapter 8).

6. **Correct Use.** A screwdriver shall not be used as a substitute for a punch, chisel, nail puller, etc.

7. **Electrical Work.** Only screwdrivers with insulated handles shall be used for electrical work.

1414. THREADING DIES

1. **Free of Dirt.** Dies shall be kept clean and free of chips and dirt.

2. **Chipped or Burred Edges.** No dies with chipped or burred edges shall be used.

3. **Clamped to Stock.** The die must be firmly clamped to the stock.

4. **Cutting Operation.** The cutting edges shall be oiled before and during the cutting

operation. Die shall be backed off a part turn every second revolution.

5. **Hand Die Stock.** When a hand die stock is being used, care shall be taken by the operator to avoid straining himself.

6. **Stowing.** The die and stock shall be thoroughly cleaned and put away after use.

1415. WHETSTONES AND STEELS

1. **Free of Dirt.** Whetstones and oil stones shall be kept free of dirt and cracks.

2. **Guiding Tool.** One hand shall guide the tool while it is being sharpened on the stone.

3. **Guards.** Stones and steels shall be equipped with guards, wherever possible.

4. **Direction of Stroke.** All strokes should be made away from the body.

5. **Block or Spacer.** A stone shall not be used in place of a block or spacer.

6. **Use of Steel.** A steel shall never be used as a pry, chisel, or bar.

1416. WRECKING BARS, CROWBARS

1. **Sharp and Free of Burrs.** Wrecking bars and crowbars shall be kept sharpened and free from burrs.

2. **Slipping.** Care shall be taken that the bar does not slip and cause injury to fellow workers.

3. **Pulling Nails.** When nails or screws are being pulled, wrecking bars shall have a block placed under the jaws after a long nail or screw has been started; this takes some of the strain off the jaws and increases the leverage.

4. **Striking Bar.** Wrecking bars shall never be struck with case-hardened steel tools. Wood, plastic, or soft steel objects shall be used for striking purposes.

1417. WRENCHES

1. **Selection of Wrench.** Care shall be used in the selection of the right wrench for the job; an extension shall never be used on a wrench. Box or socket wrenches are recommended where heavy pulls are required since there is always the danger of slipping or jaws springing in using open-end wrenches. Open-end wrenches are satisfactory for medium duty work.

2. **Condition.** Only wrenches in good condition shall be used; a bent wrench, if straightened, has been weakened and shall not be used.

3. **Strain.** A small wrench should not be overstrained. No wrench should be subjected to severe side strain.

4. **Pulled.** A wrench shall always be pulled toward the operator, never pushed, since it is easier to brace against a backward pull than against a sudden lunge forward should the tool slip or break.

5. **Use as Hammer.** No wrench shall be used as a hammer.

6. **Machine in Motion.** A wrench shall never be used on material in a machine in motion; the machine shall be stopped to permit working on the stock.

7. **Adjustable Wrenches.** An adjustable wrench shall be faced so that the movable jaw faces in the direction in which the handle is turned. The bite of a pipe wrench shall be taken near the middle of the jaws so there will be teeth in front if the wrench slips; the teeth shall be kept sharp.

8. **Sledge-type Wrench.** Only a sledge-type wrench especially tempered for use with a sledge should ever be struck or hammered to loosen nuts or bolts.

9. **Working in Confined Space.** There shall be adequate clearance between the worker and the wrench; in tight places the worker shall take care that the grip he uses will not endanger him.

1418. MACHETE, SCYTHE, SICKLE, BOLO

1. **Protection of Cutting Edges.** The cutting blades of these tools shall be sheathed, racked, or otherwise protected while being carried or during storage.

2. **Condition.** The tools shall be kept sharp and handles should be in good repair.

3. **Clearance.** Ample clearance (a distance beyond the maximum possible swing) from other employees shall be maintained.

4. **Stroke.** Exceptional care shall be taken by persons using these tools that all strokes are made away from the body and particularly from the legs, feet, and the free hand when using the machete, sickle, or bolo.

5. **Intended Purpose.** The tools shall be used only for their intended purpose, i.e., the cutting of weeds, underbrush, and similar vegetation.

PORTABLE POWER TOOLS

1425. GENERAL PRECAUTIONS

1. **Inspection.** Portable power tools shall be kept cleaned, oiled, and repaired. They shall be carefully inspected before use. The switches must operate properly and the cords be clean and free of defects. The plug shall be clean and sound.

2. **Grounds.** The casings of all electrically driven tools shall be grounded. Double insulated tools from sources qualified under the applicable military specification are exempt from this grounding requirement (see 1512).

3. **Fire Hazard.** Sparking portable electric tools shall not be used where flammable vapors, gases, liquids, or exposed explosives are present.

4. **Care of Cords**

a. **Danger of Being Cut.** Care shall be taken that cords do not come in contact with sharp objects; they should not be allowed to kink, nor left where they might be run over.

b. **Grease or Chemicals.** Cords must not come in contact with oil or grease, hot surfaces, or chemicals.

c. **Patching Prohibited.** Damaged cords shall be replaced. They are not to be patched with tape.

d. **Stowage.** Tools shall be stored in a clean, dry place where the cord can be loosely coiled.

1426. POWER TWIST DRILLS

1. **General.** Precautions for hand drills as given in article 0918 are also applicable to power twist drills. In addition, the following requirements shall be met:

a. **Drill Firmly Grasped.** A portable power drill shall be grasped firmly during the operation to prevent it from bucking or breaking loose, thereby causing injury or damage.

b. **Cleaning.** When the work is completed, the drills shall be removed, and drill and motor shall both be well cleaned.

1427. PNEUMATIC TOOLS

1. **Protective Apparel.** Operators using this type of tool shall wear and use necessary personnel protective devices.

2. **Authorized Personnel.** Only authorized and trained personnel shall operate pneumatic tools. Personnel with arthritis, neuritis, or circulatory disease shall not use vibrating tools such as hammers, chisels, tempers, riveters, or corkers.

3. **When Not in Use.** Pneumatic tools shall be laid down in such a manner that no harm can be done if switch is accidentally tripped. No idle tool shall be left in a standing position.

4. **Inspection.** Pneumatic tools shall be kept in good operating condition, thoroughly inspected at regular intervals with particular attention given to control and exhaust valves, hose connections, guide clips on hammers, and the chucks of reamers and drills.

5. **Relieving Pressure.** Pressure shall be shot off and exhausted from the line before disconnecting the line from the tool.

6. **Air Hose.** The air hose shall be suitable to withstand the pressure required for the tool. Leaking or defective hose shall be removed from service. Hose shall not be laid over ladders, steps, scaffolds, or walkways in such a manner as to create a tripping hazard. Where hose is run through doorways, the hose shall be protected against damage by the door edge.

7. **Compressed Air.** Compressed air shall not be used to clean clothing being worn or to blow dust off the body. An air hose shall never be pointed at other personnel. (See article 0902.3.)

1428. PNEUMATIC ROCK DRILLS

1. **Apparel.** Under no circumstances shall the operator of portable pneumatic drills wear loose or torn clothing. Only trained competent personnel, wearing necessary protective devices, shall operate drills.

2. **Defective Bits.** Bits shall be examined for defects; particular attention shall be paid to bit flutes which shall be ground to uniform size, sharpness, and length.

3. **Alignment.** Machine shall be held on a straight line with the hole being bored. Tipping of bit is prohibited.

4. **Speed.** Machine shall not be fed too fast.

5. **Firm Footing.** Operator shall be on firm footing before commencing operation.

6. **Hand-Grip Switch.** All drills shall be equipped with a hand-grip switch that will shut off the supply of air when grip is released. This switch shall not be modified or by-passed in any manner without prior approval of the safety engineer.

1429. POWER HAMMERS

1. **Pointing Hammer.** No employee shall point any pneumatic hammer at other personnel. Hammers shall be operated in a careful and safe manner at all times.

2. **Tool Holder.** All hammers shall be equipped with a device for holding the tool in the machine. These safety tool holders shall be inspected at frequent intervals.

3. **Air Exhaust.** Operators shall not restrict the air exhaust port in any fashion.

4. **Hand-Grip Switch.** All pneumatic hammers shall be equipped with a hand-grip safety switch. (See article 1428.6).

5. **Limit of Use.** Hammers shall be used only for those purposes for which intended.

6. **Protective Apparel.** All hammer operators shall wear necessary eye, face, and body protection. Operators of pneumatic hammers should wear gloves.

1430. POWER WRENCHES

1. **Correct Use.** Pneumatic wrench operators shall use a wrench only for those purposes for which it is intended.

2. **Hand-Grip Switches.** All wrenches shall be equipped with hand-grip safety switches.

3. **Inspection.** All wrenches shall be inspected frequently by competent personnel.

4. **Loose Clothing.** Operators of pneumatic wrenches should not wear loose fitting articles of clothing.

5. **Protective Devices.** Wrench operators shall use all protective devices provided.

1431. POWDER ACTUATED TOOLS

1. **Authorization for Use.** Powder actuated tools shall be operated, repaired, serviced, and handled only by personnel who have been trained and certified by the manufacturer, his authorized representative, or Navy Department certified instructors. In applications to concrete, approval for use of the tool shall be given only after it has been ascertained that it will give satisfactory results and create no spalling or "shelling-out."

2. **Safeguards Against Misuse.** Such supervision as necessary, including the following provisions, shall be provided to forestall the use of these tools by unauthorized persons:

a. Authorization. To secure authorization to operate a powder-actuated tool, the operator will present his application to the designated representative for issuance and recording of a work site permit.

b. Tool Permit. Each powder-actuated tool to be used at the work site will be presented to the designated representative for inspection and registration. If acceptable, a tool permit will be issued prior to use at the work site.

(1) *Data Required.* For each powder-actuated tool registered, the following data will be obtained and recorded: trade name; manufacturer; model and size; serial number; ownership.

(2) *Flammable Areas.* The use of powder-actuated tools in explosive or flammable atmospheres is prohibited.

3. **Head and Eye Protection.** The tool operator, together with other personnel in the vicinity, shall wear safety goggles or other approved safety-type face and eye protective devices and a hard hat.

4. **Securing of Tools.** Powder-actuated tools and the powder charges will be secured to prevent unauthorized possession.

5. **Tool Deficiencies.** Upon the detection of any defect in the operation of a powder-actuated tool, the tool will be removed from service until the deficiency is corrected.

6. **Charging Propellant.** Powder-actuated, fastener-type tools which, by means of a powder charge propellant, discharge an object for the purpose of affixing it to or penetrating another object, will meet the following requirements:

a. Protective Shield. The muzzle end of the tool, including barrel extensions, shall have a protective shield or guard at least 3 inches in diameter, securely attached, perpendicular to the barrel, designed to confine the flying particles and arrest the ricochet of the projectiles; or, in lieu of such shield or guard, a jig providing equivalent protection may be used.

b. Protective Securing Measures.

(1) The tool shall be made incapable of firing if not equipped with either a standard guard or a special guard, fixture, or jig of the manufacturer's design.

(2) The tool shall not be operated against other than a flat work surface unless it is equipped with a special head or jig to accommodate the curvature of the surface.

(3) The tool shall be so designed that it will not operate, when equipped with the standard guard indexed to the center position, if the bearing surface of the guard is tilted more than eight degrees from contact with the work surface.

7. **Affixing Fasteners.** Fasteners shall not be driven directly into materials such as brick or concrete closer than 3 inches from the edge or corner, or into steel surfaces closer than one-half inch from the edge or corner, unless a special guard, fixture, or jig is used. Penetration must not endanger personnel, equipment, materials, or surroundings on the opposite side of the object to which the fastener is being affixed.

8. **Compliance With Authorities.** All powder-actuated tools and their use will comply with such Federal, State and local laws as are applicable.

1432. POWER SAWS

In addition to the general precautions for portable electrical and pneumatic tools contained in this chapter, the precautions common to both electrical and pneumatic portable saws are as follows:

1. All circular portable power saws shall be provided with guards that fully encompass the unused portion of the blades.

2. Circular saw blades shall be installed by qualified personnel and only when the source of power is disconnected from the tool.

3. Only a hand grip switch, electric or pneumatic, shall be used.

1433. BUFFERS AND ABRASIVE GRINDING WHEELS

The applicable precautions of articles 0926 and 0927 shall be followed.

Chapter 15

ELECTRICITY AND ELECTRONICS

GENERAL

1501. PERSONAL PROTECTION

1. **Safety Instructions.** Personnel engaged in electrical work are to be fully informed of the hazards involved. They shall receive proper instruction in accident prevention and first-aid procedures. Procedures prescribed in NAVDOCKS MO-200, *Electric Power Distribution Systems Maintenance,* shall be observed.

2. **Clothing**

a. **General Safety Measures**

(1) Do not work on electrical apparatus with wet hands or while wearing any wet clothing.

(2) When performing work on or within four feet of exposed electrical equipment, do not wear any clothing with exposed zippers, buttons, or other metal fasteners.

(3) Personnel shall wear no loose or flapping clothing.

(4) Flammable articles, such as celluloid cap visors, shall not be worn.

(5) Personnel shall remove rings, wrist watches, bracelets, and other similar metal items before performing work on or within four feet of electrical equipment with exposed current-carrying parts.

(6) Personnel performing line construction and maintenance work shall wear high-cut shoes with sewed soles for work on live electrical circuits where the voltage is above 50 volts. Thin soled shoes and shoes with metal plates or hobnails are prohibited. Safety shoes with nonconductive soles shall be worn if available.

b. **Special Protective Clothing**

(1) *Rubber Gloves.* Rubber gloves should be worn by personnel likely to come in contact with live conductors or current-carrying parts of equipment in the course of their work where the system voltage exceeds 30 volts. Since circuits below 30 volts are also dangerous, no work should ever be done on live conductors of any voltage except in case of emergency. If the work requires that one hand be free of covering, a rubber glove should be worn on the other. The following safety rules shall apply in the use of rubber gloves:

(a) Personnel intending to work on live circuits, or on equipment containing exposed current-carrying parts where the voltage exceeds 30 volts, shall put on rubber gloves before coming within reach of the live parts and shall not remove them until entirely clear of such equipment. Rubber gloves shall not be used for any purpose except live line work.

(b) Leather protectors shall always be worn over rubber gloves. Leather protectors shall not be used for any purpose other than with rubber gloves.

(c) Rubber sleeves or rubber gloves shall never be rolled down or worn inside out. Under no circumstances shall two pairs of rubber gloves be used.

(d) Personnel shall wear rubber gloves when cutting a supposedly dead cable or testing supposedly burned-out transformers.

(e) Rubber gloves shall be tested periodically as prescribed in article 1501.2b (2). In addition, before each use, they shall be checked by the user for punctures, tears, or abrasions. Cuffs should be rolled up and air forced into the fingers and palms of the gloves. If there is evidence of any leakage or thin spots, the gloves should not be used.

(2) *Testing Rubber Protective Equipment.* Rubber gloves and other rubber

protective equipment shall be tested at intervals not to exceed the following when in regular use except as further prescribed herein:

Rubber Gloves	30 days
Rubber Blankets	90 days
Rubber line hoses, and hoods	180 days

Electrical tests, testing equipment, and method of marking shall be in accordance with current ASTM standards.

Each glove or other piece of rubber protective equipment shall be provided with a rubber calendar on which shall be marked with an electric pencil the last date on which the item was tested and passed. Equipment failing to pass the test shall be replaced. Tests will be made by naval activities having the necessary equipment, by reputable electrical testing laboratories, or by local power companies which may have such testing equipment and are willing to perform such tests. See also NAVDOCKS MO-200, *Electric Power Distribution Systems Maintenance*.

All rubber protective equipment shall be given a thorough visual inspection and an electrical test whenever the last test was made more than six months prior to issue or delivery for actual use of personnel. Equipment maintained in a standby status for emergency use only, may be considered to be in the same category. If it has been used more than six weeks but less than six months after the last test, it shall again be tested before being returned to standby status or placed in regular use.

(3) *Protective Helmets*. Regular protective helmets (hard hats) are required to have a degree of insulation resistance such that personnel other than electrical may be protected from accidental head contacts with electrical circuits and equipment at comparatively low voltages (less than 2200 volts). Electrical workers requiring head protection incidental to their duties or to the working environment particularly those engaged in transmission or distribution line installation and repair, shall wear electrical workers insulating safety helmets or all-purpose protective helmets for which the proof-test voltage is not less than 20,000 volts.

(4) *Defective Personal Equipment*. Personal protective equipment should be frequently inspected by the wearer. Equipment found defective shall be immediately taken out of service, tagged, and turned in for repair or replacement.

3. Insulating Floor Covering. On all circuits where the voltage is in excess of 30 volts, the worker shall be insulated from accidental grounding by use of approved insulating material on the floor at operating and working locations. The material shall have the following qualities:

a. It shall be dry, without holes, and shall not contain conducting materials.

b. The voltage rating for which it is made shall be clearly marked on the material, and the proper material shall be used so that optimum protection from the voltage can be supplied.

c. On voltage below 600 volts, dry wood may be used, or, as an alternative, at least two layers of dry canvas, sheets of phenolic material, or rubber mats. Where other than approved rubber mats are used, the marking provision of paragraph b above shall not apply; however, care shall be taken to insure that substitute material is capable of providing the required insulation value.

d. On circuits above 600 volts, nonconducting rubber matting of an approved type shall be used.

e. Care shall be exercised to insure that moisture, dust, metal chips, etc., which may collect on insulating materials is removed at once. Small deposits of such materials can become very great electrical hazards.

4. Platforms. Whenever it is necessary to work on electrical circuits or equipment in wet or damp locations, dry wooden (or similar nonconducting material) platforms shall be provided so that there will be no possibility of contact between the wet floor and the workmen's shoes.

5. Metal Tool Handles. Meter testers, relay men, and servicemen may work on energized equipment where rubber gloves cannot

be worn. In these cases insulated handles on tools are adequate. Metal handles of hand held tools shall be insulated by one of the following methods:

a. Taping Method. The handle and as much of the shaft as is practicable is covered with two layers of rubber or vinyl plastic tape half-lapped, followed with a layer of friction tape half-lapped.

b. Coating Method. Handle and shaft is dipped in a plastisol solution in accordance with the instructions of paragraph 9190.170 of *Bureau of Ships Technical Manual,* NAVSHIPS 250-000.

c. Sleeve Method. In an emergency, where time does not permit using one of the previous methods, handles and shafts may be covered with a cambric sleeving, flexible plastic tubing, or insulating tubing removed from scraps of electrical cable.

6. Fuse Box Covers and Other Such Equipment. The covers for fuse boxes, and other types of wiring equipment and accessories shall, except when work is being done on them, be kept securely closed and locked. When work is being done on such equipment, unauthorized personnel should be kept at least four feet away and warning signs posted to keep clear. If equipment must be left exposed and unattended, adequate safeguards such as a temporary nonconductive covering shall be installed.

7. Metal Enclosures. Protective metal enclosures for electrical and electronic equipment, metal bases, frames, etc., are to be grounded in accordance with article 1512. Grounding shall be checked at regular intervals and after repair work has been performed.

8. Interlocks and Safety Devices. Safety devices such as interlocks, overload relays, and fuses shall not be altered or disconnected except for replacement, nor shall safeguard circuits be modified without specific authority.

9. Tools. Unserviceable tools shall be repaired if possible or condemned and replaced. Tool handles, either wooden or plastic, which are cracked, chipped, splintered, or broken must be replaced. See also NAVDOCKS MO-200, *Electric Power Distribution Systems Maintenance.*

10. Warning Signs.

a. Explosive Vapors. Warning signs shall be temporarily displayed where explosive vapors are present in any compartment or space. No electrical or electronic equipment or auxiliary control units shall be energized within such area while these signs are posted.

b. Open Circuits. Warning tags requiring open-circuit condition shall be placed on all necessary power supply switches to prevent accidental application of power to units of an electrical or electronic system that are under repair or overhaul.

c. Shops. Appropriate warning signs shall be displayed in electrical, aviation, electronic, and special weapons shops.

d. Permanent Signs. Danger or warning signs shall be permanently posted in conspicuous places and suitable guards shall be installed in appropriate areas to prevent personnel from making accidental contact with antennas, antenna leads, power supply leads or terminals, fuses, or any uncovered contacts that have sufficient voltage and current characteristics to constitute a hazard to personnel.

e. Drawings. The following Bureau of Ships Drawing Standards have been prepared for warning signs:

High Voltage (RE 10 B 608B)
Stack Gases (RE 10 AA 529 A)
Explosive Vapors (RE 10 A 589 A)
R. F. Hazards (RE 10 D 2282)

11. Special Precautions Against Electrical Shock. Strict adherence to the rules on the use of proper clothing and equipment, outlined above, is essential in an area where electrical work is being done and serves as an aid to the prevention of electric shock. Other safety measures to be taken are as follows:

a. Caution With Metal Parts. It is essential that personnel also keep in mind the

fact that various pieces of equipment not ordinarily thought of as conductive can be dangerous. Miscellaneous tools and equipment containing metal parts, such as metal tapes, cloth tapes with embedded metallic threads, wooden scales with metal trimmings, cleaning brushes, dusters, or brooms having exposed metal parts, etc., shall not be used in any area within four feet of electrical equipment or wiring having exposed current-carrying parts.

b. Illumination. It is the responsibility of the supervisor to ensure that sufficient illumination is provided for safe and expeditious performance of work involving electrical wiring and equipment. See Chapter 2 for minimum lighting necessary for specified types of work.

c. Attention to Work. Personnel working on electrical circuits shall exercise extreme care to ensure that their attention does not wander and that attention is not diverted from the work at hand.

d. Accidental Grounds and Short Circuits. Continual inspection with awareness of the danger of accidental grounds and short circuits is necessary for the safety of personnel. Any dangerous conditions shall be reported and should be corrected if possible before any further work is done in the area.

e. Insulation. Do not trust insulation when electrical work is to be performed. Insulation may appear to be in perfect condition but, if defective, may result in serious injury from electric shock.

f. Live Circuits. Fundamentally, current, rather than voltage, is the criterion of shock intensity. The passage of even a very small current through a vital part of the human body will cause DEATH. The voltage necessary to produce the fatal current is dependent upon the resistance of the body, contact conditions, the path through the body, etc. When a 60 cycle alternating current, for example, is passed through a man from hand to hand or from hand to foot and the current is gradually increased from zero it will cause the following effects: at about 1 milliampere (0.001 ampere) the shock is perceptible; at about 10 milliamperes (0.01 ampere) the shock is of sufficient intensity to prevent voluntary control of the muscles and a man may be unable to let go and free himself; at about 100 milliamperes (0.1 ampere) the shock is fatal if it lasts for one second or more. The above figures are the results of numerous investigations and are approximate because men differ in their resistance to electrical shock. It is imperative to recognize that the resistance of the human body cannot be relied upon to prevent a fatal shock from 115 or lower voltages – FATALITIES FROM AS LOW AS 30 VOLTS HAVE BEEN RECORDED. Tests have shown that body resistance under unfavorable conditions may be as low as 300 ohms and possibly as low as 100 ohms from temple to temple if the skin is broken. Volt for volt DC potentials are normally not as dangerous as AC as evidenced from the fact that reasonably safe "let-go current" for 60 cycle alternating is 9.0 milliamperes for men and 6.0 milliamperes for women while the corresponding values for direct current are 62.0 milliamperes for men and 41.0 milliamperes for women. *Any circuit not positively grounded shall be considered live.*

(1) When working on live circuits exercise as much care to avoid contact with low voltages as with high voltages. Work on live circuits should not be undertaken alone and should be accomplished only in accordance with the procedures stated in article 1525. Circuits of 30 volts or less usually are considered safe from shock hazard but danger from the fire hazard, where high currents are possible, must be guarded against.

(2) Never take a shock intentionally from any voltage. This is dangerous practice and is strictly forbidden. Whenever it becomes necessary to check a circuit to see that it is alive, an appropriate voltage tester, voltmeter or other indicating device shall be used. Circuits carrying voltages in excess of 600 volts shall not be measured by probing or holding the test probes in the hands. Whenever measurements of voltages in excess of 600 volts are necessary, the procedures prescribed in article 1525 paragraph 3 shall be followed.

(3) Do not approach closer than one foot to any electrical circuit or any electrical equipment where the circuit voltage is below 7,500 volts and which has exposed live metal parts, except to accomplish a particular mission with respect to the circuit or equipment. Where the circuit voltage exceeds 7,500 volts, maintain clearances as tabulated in article 1525.4c(3).

g. **Protection of Nonelectrical Workers.** Where work is being performed within four feet from the exposed parts of electrical or electronic equipment by painters, carpenters, or other trades, regardless of the voltage an insulating barrier shall be provided between the work area and any live electrical parts – or the circuits shall be deenergized. In all such cases, the supervisors of the nonelectrical workers shall report the location of the work to the electrician in charge. The electrician shall instruct the supervisors of the nonelectrical workers regarding proper precautions to be taken against electrical hazards, and provide and erect proper insulating barriers as may be applicable or provide for deenergizing and locking out of circuits where possible. The supervisor of the nonelectrical workers is responsible for carrying out precautionary instructions given by the electrician in charge.

12. **First Aid**

a. **Resuscitation.** Before touching a victim of electric shock, the circuit should be deenergized or the victim freed from the live conductor by the use of some suitable nonconductive object such as a dry wooden stick or pole. Artificial resuscitation procedures appropriate to the victim's condition shall be started *immediately*. Electrical workers shall be instructed in the mouth-to-mouth, mouth-to-nose, back-pressure arm-lift, poletop (transmission line workers), and external heart massage methods of resuscitation. Training of employees not familiar with these methods shall be arranged with the safety officer or the medical department. Instruction in external heart massage shall be under the direct supervision of medical personnel.

b. **Attendant.** A man who is qualified in administering first aid for electric shock shall be immediately available whenever work is being performed on live circuits.

1502. SAFETY FROM FIRE

1. **Preventing Fires.** General cleanliness in the entire area is essential for the prevention of fires. In addition, the following requirements are particularly applicable in an area where work with electricity is being carried on:

a. **Avoiding Use of Flammable Cleaning Fluids.**

(1) Gasoline, benzene, ether, and similar flammable cleaning fluids shall never be used on either energized or deenergized electrical apparatus.

(2) Alcohol shall not be used for cleaning equipment as it damages most types of insulating varnishes.

(3) Alcohol shall never be used for cleaning near electrical equipment from which a spark might be received.

b. **Keeping Machinery Clean.** Oil, grease, carbon dust, etc., can become ignited by electrical arcing. Machinery is to be kept absolutely clean and free of all such deposits.

c. **Avoiding Open Flames.** Lighted matches or other open flames shall never be used in confined spaces because of the danger of explosions and fires.

2. **Fire Fighting.** In the event of a fire, the following procedures are to be carried out:

a. **Rules Applying to All Fires:**

(1) Immediately deenergize the circuit or equipment affected.

(2) Call the Fire Department. In a few cases the means of calling the Fire Department may be much closer at hand than the electric power controls. In such cases the Fire Department should be called first, but circuits should be deenergized before fire fighting begins.

(3) Control the fire insofar as possible with the correct type of firefighting equipment until firefighting personnel arrive. Firefighting equipment must be kept readily available at all times.

564-350 O - 74 - 18

b. Rules Applying To Specific Situations

(1) Fires near standpipes. If an electrical fire occurs at a location where standpipes are available, the standpipes should be manned only by experienced firefighting personnel who are familiar with that equipment.

(2) Cable Fires. In case of cable fires in which the inner layers of insulation, or insulation covered by armor, support combustion, the only positive method of preventing the fire from running the length of the cable is to cut the cable and separate the two ends.

c. Firefighting equipment. Extreme care shall be taken to select the proper type of equipment to combat electrical fires. The preferred extinguisher for electrical fires is the Class C extinguisher. The stream from this extinguisher is nonconductive and can be directed against energized circuits without danger of shock. Fire extinguishers ordinarily used for electrical fires are the carbon dioxide, dry chemical, and vaporizing liquid types. (See Chapter 2 for details.) The latter type is never to be used in confined spaces or in large quantities. If it is necessary to use salt water extinguishers against electrical fires, extreme care must be observed to avoid shock. The same danger exists in lesser degree if fresh water is used.

3. Inspection Before Current Is Restored. If the electrical wiring or apparatus has been affected by fire a careful inspection must be made before the current is turned on in the building.

1503. INSPECTION AND MAINTENANCE

1. Personnel Responsible. Inspection and maintenance work on electrical equipment shall be performed only by qualified and authorized personnel.

2. Inspections. Electrical appliances and equipment must be periodically inspected for adequacy and functioning of safety features and for damaged insulation and loose connections (the exact periods of time should be determined by the safety officer or other qualified person). Appliances and equipment found to be defective shall be removed from service.

3. Overhauling Machinery. Unauthorized modifications to electrical wiring and equipment shall not be made, nor shall authorized modifications be made by other than qualified personnel.

4. Cleaning. Electrical and electronic equipment must be kept clean at all times to ensure proper performance. The following precautions are to be observed when cleaning:

a. Safety In Use of Cleaning Equipment

(1) Brushes, dusters, brooms, or other such articles which may be used within four feet of or on electrical equipment having exposed or current-carrying parts shall not themselves contain any exposed metal parts.

(2) If a vacuum cleaner is necessary, use only one with a nonmetallic hose and an adequate dust receiver.

(3) Use sandpaper and files only upon competent advice. Emery paper shall never be used on electrical equipment because of the conductive residue remaining after use.

(4) Do not use solvents unless absolutely necessary. When solvents are necessary, use only the smallest possible quantity of approved solvent.

b. Blowing Out Equipment. Use only rubber or insulating hose in airlines for blowing out equipment. Use no more than 10 pounds of pressure to avoid damage to the insulation and injury to personnel. Be sure the air is free from water (see Article 0902.3). Never turn compressed air on yourself or others, since it can cause serious injury.

ELECTRICAL EQUIPMENT

1510. SPECIAL WARNINGS TO PERSONNEL

Care shall be taken in handling all tools, loose metal parts, liquids, etc., which it is necessary to use in an area where there is electrical equipment or electrical work being done. The following general rules shall apply:

1. **Danger from Metal Objects**

a. Personnel shall exercise care when it is necessary to walk above open electrical equipment or exposed wires to insure against dropping or loss of metallic objects attached to clothing.

b. Tools of magnetic material can be pulled into contact with dangerous circuits when these tools are used in the vicinity of magnets associated with magnetrons in radars. Care must be taken to avoid this hazard.

2. **Danger from Foreign Objects.** Storage or insertion of foreign articles in or near switch-gear, control appliances, panels, etc., is forbidden.

3. **Danger from Energized Equipment.** Personnel required to work on energized equipment shall be familiar with the precautions in article 1525.

1511. SECURING SWITCHES PRELIMINARY TO WORK

1. **Deenergizing Circuit.** In general, all main circuits shall be deenergized before any work is performed on them. When it is necessary, due to existence of emergency conditions, to work on such circuits, precautions cited in article 1501 shall be observed. When electrical equipment is to be worked on, it shall be disconnected from the source of supply by opening main or branch supply switches, circuit breakers, or cutouts so as to completely eliminate the possibility of current flowing to the equipment. Switches, circuit breakers, or cutouts opened for this purpose shall be secured (preferably locked) in the open position, shall have tags attached, and only the individual placing the tag shall remove it and reenergize the circuit.

2. **Pier Box Connections.** Pier box connections shall be made and broken only by qualified shore activity personnel in accordance with procedures prescribed herein.

3. **Tagging.** After securing, switches shall be tagged with a card bearing a warning that they are not to be closed, such as: DANGER–WORKING ON CIRCUIT–DO NOT OPERATE SWITCH EXCEPT BY DIRECTION OF (NAME). . . . . The tag is to be signed and dated by the person directly in charge of the work. The tag shall be placed in a conspicuous location and well illuminated. A separate record shall be made and retained by the person who placed the tag.

4. **Testing and Discharging.** After switch and circuit breakers have been opened, and before work has been started, the de-energized circuit shall be tested (see article 1525.3) and discharged to ground (see article 1512.8).

5. **Removing Tag or Lock.** When the work has been completed, the tag shall be removed by the same person who attached it. No one should remove another person's tag. If the switch has been locked it shall be unlocked and the circuit restored by the person retaining the key.

6. **Tagging by More Than One Party.** When more than one repair party is engaged in the work, a signed and dated tag for each party shall be placed on the supply switch. Each individual is to remove only his own tag when the work has been completed and it has been determined that all persons are in the clear.

1512. GROUNDING OF METAL PARTS

1. **Where Necessary.** Metal cases, bases, frames, and other metal parts of electrical equipment, appliances, machines, and fixtures powered from supply circuits in excess of 30 volts AC or DC, shall be grounded. Where inherent grounding is not provided by the mounting arrangements, ground connections shall be provided to ground the frame,

enclosure, or support of permanently installed electrical equipment. Semiportable equipment which is normally used at a fixed location shall also be grounded. Portable electrical equipment in conductive housings shall have adequate grounding.

2. **Grounding Conductor.** The grounding conductor shall have a cross sectional area at least equal to, and preferably greater than, the cross sectional area of the line conductors which carry power to the equipment. The grounding conductor shall make positive metal-to-metal, low resistance contact with the equipment at one end and at the other end with the metal object used as a ground, the hull of the ship in shipboard installations, and the ground rods, water pipes or installed grounding object in shore installations. The resistance between the earth and the metal object used as ground shall not exceed 3 ohms.

3. **Grounded-Type Plugs and Receptacles**

a. **Use.** Navy specifications for portable tools require that the electric cord for such tools be provided with a distinctively marked ground wire in addition to the conductors for supplying power to the tool. Double insulated portable electric tools obtained from sources qualified under the applicable military specification are exempt from this grounding requirement. The end of the ground wire within the tool shall be connected to the tool's metal housing. The other end shall be connected to a positive ground. For this ground connection, specifically designed grounded-type plugs and receptacles which automatically make this connection when the plug is inserted in the receptacle, shall be used. These grounded-type receptacles shall be installed for all power outlets. When installed, they shall be used with the grounded-type plugs to ground portable tools and equipment. If grounded-type receptacles have not yet been installed, they shall be installed as soon as possible. Portable tools not provided with the grounded-type plug, and miscellaneous portable electric equipment which does not have a cord with a ground conductor and grounded plug, shall be provided with a 3-conductor cord with a standard Navy grounded-type plug. The ground wire shall be connected to a positive ground, in accordance with article 1512.2, above.

b. **Connecting Plugs and Cords.** Care must be exercised in connecting the plugs and cords. The grounding conductor of the cord shall be connected to the ground contact of the plug at one end and to the metal equipment housing at the other end. The cord shall be arranged so as not to create a tripping hazard. If the conductor which is connected to the metallic equipment housing should be inadvertently connected to a line contact of the plug, a dangerous potential would be placed on the equipment casing, which might result in a fatal shock to the operator. If the cord is pulled loose from the plug only qualified electricians shall repair it.

4. **Other Types of Plugs and Receptacles.** If the grounded-type plugs and receptacles have not been installed in the spaces where a portable tool is to be used, other types of plugs and receptacles may be used only if a separate ground wire is connected between the tool housing and a positive ground. When the tool cord does not include an extra wire for grounding, an additional insulated wire should be connected between the metal housing of the tool and ground. If the tool housing has two or more conducting parts which are not electrically connected, each part shall be connected to the ground wire. Connection of the ground wire to the tool housing and to the ground shall be by means of screws or bolts. Employment of spring clips for either end of the grounding wire is prohibited.

5. **Other Means of Grounding.** When the ground connection is to be made by means other than a contact in the plug and receptacle, care shall be taken to secure a good contact between the ground wire and the metal by scraping away paint to provide a clean surface. The ground connection shall be made before inserting the power supply connecting plug, and the plug shall be pulled out before removing the ground connection. Frequent inspection of all the connections

in portable electric tools shall be made to assure that the supply cord and its connections within the tool are suitably insulated and that the ground connection is intact.

6. Grounds on Power Lines. Except in an installation where local power conditions require a grounded supply line as a normal operating condition, the power shall be removed from equipment immediately when the power line shows a ground. The circuit shall not be energized until it has been determined that the ground is not in the equipment.

7. Wooden Buildings. In wooden buildings, care should be exercised to run all electric wiring at least four feet from all down-leads of any lightning protective system. All steel masts, metallic gutters and down spouts, steel beams, columns, and other metallic members of appreciable mass should be grounded.

8. Discharging Machines to Ground. The charge retained by electrical equipment when it is secured is, in certain cases, sufficient to cause a severe shock. Before the terminals of an apparently dead piece of equipment are touched, the equipment should be discharged to the ground by momentarily connecting the terminals together and to ground. Capacitors, reactors, lightning arresters, transformers, and similar equipment with high values of capacity or inductance are particularly dangerous and should be discharged twice at intervals of not less than 15 seconds if the highest possible level of personal safety is to be attained.

1513. PORTABLE ELECTRIC EQUIPMENT

Electrically powered portable tools such as drills, grinders, scaling hammers, and sanders may become sufficiently damaged during normal use to cause electrical shock to the user. Cases are reported in which shock has been fatal. Shipboard conditions are specially conducive to increasing the severity of a shock because the person affected is usually in contact with the ship's metal structure and because the dampness often present in the user's clothing lowers electrical resistance. All personnel who use portable electric tools are cautioned to make certain that a proper ground connection is provided. (See article 1512 for grounding precautions).

1. Portable Cables. Portable electrical cables shall be carefully selected and maintained. Spliced portable cables are extremely dangerous and shall never be used unless an emergency warrants the great risk involved. Portable cables should be of sufficient length that they will not be subjected to longitudinal stresses or need to be pulled taut to make connections. Current-carrying capacity should be ample for all expected power demand. Portable cables should be checked frequently while in service to ascertain degree of heating. Any cable which feels more than comfortably warm to the bare hand placed outside the insulation should be checked immediately for overloading. Interconnections between lengths of portable cable shall be made only on approved connection blocks or by other approved fittings which shall be suitably insulated and enclosed to eliminate all possible hazards from fire or shock to personnel.

2. Portable Appliances. No electric fan may be operated without the fan blade guard in place (see 0204.7). No commercial household appliance shall be operated which has not been approved by the Underwriters' Laboratories.

1514. SWITCHES AND CIRCUIT BREAKERS

Switches and circuit breakers perform the same function, and the precautions to be taken with them overlap in many details. The following precautions shall be taken as they are applicable to the particular circuit:

1. Installation of Switches. Switches shall be installed so as to minimize danger of accidental operation. Where practicable, they shall be installed so that gravity cannot operate them. When this is not practicable, they shall be equipped with suitable latches to prevent accidental closing. Except where absolutely necessary, switches are not to be

installed in locations where explosives or flammable vapors exist. When they are installed in these locations, they should be of the special explosion-proof type. Only safety-type switches shall be permitted at machines.

2. Operating Switches. A workman shall not operate any system switch, circuit breaker, or other disconnecting device until he is instructed to do so by proper authority and is thoroughly familiar with the equipment involved. When operation has been authorized, the following precautions shall be taken:

a. Preliminary Precautions

(1) When maintenance or repairs at a naval activity involve switching operations which may affect the serving utility's system, the station electrical shop supervisor must notify the system operator of the utility, so that prearranged emergency measures may be followed if the utility's circuit breakers trip out. The electrical shop supervisor shall prescribe and enforce detailed switching and tagging procedures.

(2) When local branch circuits which feed moving or rotating parts are to be energized, men near moving parts must be notified that the circuit is to be energized. This is particularly important in cases where rotating antennas are energized. Where the men are not visible from the control station, a safety watch shall be maintained with adequate means of communication between the station and the watch.

b. Safety During Work

(1) During the time the electrical foreman is switching, the men on the job shall not follow him or congregate where the switching is being performed. Every man engaged in the work shall be instructed concerning the job procedure and precautions to be observed.

(2) Switch handles should always be moved to definite positions.

(3) Before doing any switching on a regulated feeder, workmen should be sure that regulators are off the automatic position and set in the neutral position.

c. Safety With Special Type of Switches

(1) Outdoor Disconnecting Switches. Outdoor disconnecting switches shall not be operated without the disconnect-pole provided for that purpose.

(2) Air-Break Switches. Each time an air-break switch is opened, a check shall be made to make certain that all contacts are actually open and safe clearance is obtained on all three phases. The position of the operating handle is not to be depended upon as evidence that the switch is open.

3. Safety with Circuit Breakers

a. Precautions Preliminary to Work. Before any work is done on a circuit breaker the following precautions shall be taken:

(1) All control circuits to which it is connected shall be deenergized.

(2) Draw-out circuit breakers shall be switched to the open position and removed before any work is done on them.

(3) Disconnecting switches ahead of circuit breakers shall not be opened until after circuit breaker is tripped to open position. No work shall be done on the opened circuit breaker until all isolating switches protecting it also have been opened.

(4) Where disconnecting switches are not provided to isolate circuit breakers, the supply bus to the circuit breaker shall be deenergized on all circuits breaker shall be age is in excess of 150 volts. On circuits where the voltage is below 150 volts, work may be done under emergency conditions with the circuit breaker energized by strict adherence to the provisions of regulations for working on energized circuits contained in article 1525 herein.

(5) Before working on an oil circuit breaker, workmen must be sure that the breaker cannot be opened or closed automatically. When possible, it should be in the open position or have the operating mechanism blocked.

b. Operating Circuit Breakers. When operating circuit breakers, follow these precautions:

(1) Use only one hand.

(2) Keep the hands clear of parts other than operating handles.

(3) Touch only one breaker handle at a time.

(4) Close isolating or back-up switches before closing circuit breaker to restore service or to energize circuits.

(5) Trip circuit breakers before opening switches.

(6) Keep the face turned away while closing circuit breakers.

(7) A circuit breaker shall not be prevented from performing its normal function by short circuiting or blocking out interlocking, overload, or other protective devices, except for purposes of authorized test work.

(8) Never stand over a circuit breaker while the power is on.

c. **Closing Circuit Breakers.** Before a branch or equipment circuit breaker or switch is closed, it should be determined that:

(1) The circuit is ready, equipment connected to it is in condition to be energized, and all clearance has been given up and all tags removed;

(2) Men working on the circuit, have been notified that the circuit is to be energized and they are in the clear;

(3) Circuit protective devices are in good working condition.

4. **Labeling.** Switches and circuit breakers shall be labeled to show the equipment serviced. Care shall be taken to insure that these labels are kept up to date and not obliterated.

1515. WORKING ON TRANSFORMERS

Precautions of this section are limited to the equipment used in the ordinary electric circuit. For further details concerning capacitors, personnel are referred to the precautions in 1542.

1. Protection of Personnel at Work

a. **Removing Fuses.** When removing transformer fuses, the workman must wear rubber gloves with leather over-gloves. This applies also to fuses which are being replaced by means of switch sticks equipped with fuse tongs or by means of regular fuse tongs, where the circuit voltage exceeds 150 volts.

b. **Standing On Live Transformers.** Workmen must not stand on top of energized transformers, regardless of voltages, except in extreme emergencies, and then only with the full knowledge and consent of the man in charge of the work crew. When such procedure is followed, the transformer cover shall be first covered with a rubber blanket, protected in turn with a rubber bag. Standing on top of a transformer when wearing climbers is strictly prohibited under any circumstances.

c. **Raising And Lowering Transformers.** Workmen must not stand beneath transformers which are being raised to, or lowered from any overhead structure. While transformers are being raised or supported with blocks, men on the pole or structure must take a position above, or well in the clear of the transformer.

d. **Protection Against Gaseous Fumes.** Large transformer case interiors are not normally ventilated and very frequently contain poisonous or explosive fumes. No work should be done inside any transformer case until provisions have been made to continually exhaust such fumes while the work is progressing. Men working in transformers should be instructed to report immediately any feeling of ill effects from fumes or gases, and shall be ordered out of the immediate area until they have recovered.

2. Care of the Transformer

a. **Grounding Transformers.** All transformer cases shall be grounded to a positive ground. On systems operating with one conductor grounded, the case shall also be connected to the ground conductor at the transformer.

b. **Taking Paralleled Transformer Out of Service.** When a paralleled transformer is taken out of service the secondary phase lead or leads must be disconnected before the primary circuits are opened. The secondary neutral or ground connection should not be disconnected until the primary cutouts have been opened.

1516. ELECTRICAL SUBSTATION FENCING

All electrical equipment, such as substations in permanent outside locations, having any exposed carrying parts less than eight feet above ground shall be completely enclosed by a metallic fence and made accessible to authorized personnel only. Such fences shall be high enough to discourage climbing and shall have interior clearance, electrical grounding, warning signs, and grounds maintenance as prescribed in NAVDOCKS DM-4, *Electrical Engineering*.

1517. CABLE

1. Electrical power cable is not to be used to support chain falls, lifting tackle, or weights of any kind.
2. Scaling, chipping, and wire brushing shall not be performed on power or lighting cable.
3. Before welding or drilling bulkheads or decks, a thorough inspection shall be made of the opposite bulkhead. Cable that might be affected shall be removed from the immediate area by competent personnel.
4. Power cable is not to be used as ladder rungs for climbing.
5. Cable identification tags must not be removed or painted.
6. Work on power, lighting, or telephone circuits shall not be performed by other than authorized and qualified personnel. This requirement applies also to packing glands (terminal or bulkhead tubes) used in connection with these circuits.
7. All electrical conductors shall be considered to be carrying current until it has been established beyond doubt that they are dead.

1518. FUSES

1. Fuses are to be removed and replaced only after the circuit has been completely deenergized.
2. Whenever practicable, a circuit should be checked before replacing a burned out fuse, as the trouble is usually indicative of a circuit fault.
3. Fuse pullers made of insulating material shall be used for removing and replacing most fuses. (This includes all except those mounted in plug-type fuse holders, which are easily removed by unscrewing the plugs.)
4. A blown fuse shall be replaced by a fuse of the same ampere capacity. Insertion of metal discs, coins, etc. in back of plug fuses, or the shorting out of cartridge type fuses, is strictly prohibited.
5. Where removable fuse links are used, only one link of correct rating is to be used for each fuse.
6. Special precautions shall be taken to insure that the secondary of a current transformer is not opened or disconnected until it has been positively determined that the primary circuit has been deenergized. This precaution shall be observed regardless of the operating voltage of the circuit in which the current transformer primary is placed.

1519. SERIES-WOUND MOTOR

A series-wound motor on a direct-current machine should not be started unless the motor is attached to a substantial load. Otherwise the motor may attain dangerous overspeeds.

1520. WET AND DRY CELL BATTERIES

1. Wet Cell Batteries

a. General Precautions. The following safety precautions are to be observed in connection with wet cell storage batteries:

(1) Keep flames and sparks away from the vicinity of batteries.

(2) When using tools around batteries exercise care not to short circuit battery terminals. Use only tools with insulated handles for removing and replacing batteries.

(3) Never open batteries except in well-ventilated spaces and only in extreme emergencies if the room temperature is above 125 degrees F.

(4) Keep the temperature of the battery compartment below 95°F., if possible.

(5) Be sure to ventilate a battery compartment which has been sealed before turning on the lights, making or breaking electrical connections, or performing any

type of work in the compartments. "Closed cell" batteries do not require ventilation precautions. (See NAVDOCKS MO-203, Vol. 1, *Wire Communication and Signal Systems Maintenance*.)

(6) Avoid sparks when removing or replacing batteries in compartments which may contain fumes.

(7) When using batteries with one terminal grounded, disconnect the grounded terminal before removing the battery and do not reconnect it until the battery has been replaced.

(8) Whenever practicable, maintenance and service facilities for lead-acid batteries should be separated from those for nickel-iron-alkaline batteries.

b. Charging

(1) Deenergize Circuit. The charging current shall be deenergized before making any repairs to terminal connections or before batteries are connected to or disconnected from the charging line.

(2) Sparks and Flames. Extreme care shall be exercised to avoid striking sparks and open flames in the vicinity of batteries while being charged. Even when optimum ventilation is provided, the hydrogen concentration immediately above the cells is within the explosive limits when charging at a fully gassing rate.

(3) Ventilation. Charging shall not be started until it has been ascertained that the battery compartment or charging room is adequately ventilated. Charging shall be stopped whenever ventilation is interrupted and shall not be resumed until adequate ventilation has been restored. Battery charging facilities are considered to be adequately ventilated when the hydrogen concentration at distances greater than 6 inches above the cells is maintained below 3 percent. Charging facilities located in large open spaces, having adequate industrial ventilation may not require supplementary ventilation, or a localized air flow directed over the cells may suffice. Unless adequacy has been definitely determined, particularly for facilities located in confined spaces, a survey of the hydrogen concentration should be made with the equipment operating under freely gassing conditions. A portable hydrogen combustible gas indicator is available in standard stock (FSC 6665) for this purpose. In charging lead-acid batteries at a freely gassing rate, the flow of exhaust air in cubic feet per minute, Q, required to maintain hydrogen below the maximum safe level (3%) in a closed compartment containing N number of cells at a charging rate of I amperes may be computed from the formula:

$$Q = 0.018\ IN.$$

This formula includes an air distribution factor of 2 which allows for nonuniform distribution of air flow over the cells and for extraneous currents not contributing to the required hydrogen dilution.

c. Handling Electrolytes

(1) Protective Clothing. When engaged in electrolyte handling, mixing, or filling operations, personnel shall wear face shields and chemically resistant gloves, footwear, and aprons.

(2) Mixing. Water shall never be poured directly into battery acid. The acid must always be poured slowly into the water.

(3) Handling Equipment. Large containers of electrolytes such as acid carboys shall not be handled manually but should be moved by appropriate materials handling equipment. Permanent mixing and filling facilities so designed as to minimize the hazards of manual handling and spillage should be provided.

(4) Showers and Eye Fountains. Deluge showers and eye-wash fountains shall be provided in the immediate vicinity of all battery maintenance and electrolyte handling operations.

2. Dry Cell Batteries.

a. Type 19026 Dry Batteries

(1) Shock Hazards. The 300-volt B Section of the Navy Type 19026 pack battery is capable of giving a very serious, and even fatal, shock upon contact. Extreme care must be taken not to come into contact with the terminals of this battery or of any high voltage battery.

(2) Disconnecting the Battery. When this type battery is to be disconnected

from the operating apparatus, the current flow shall be stopped before disconnecting the plug. It is possible for sufficient hydrogen gas to accumulate in this battery to produce a serious explosion if ignited, and a spark produced by pulling the plug from the socket while the current is flowing is liable to ignite accumulated gas.

b. Hydrogen Generation. Use of a multicell dry battery shall be discontinued after its closed circuit voltage has dropped below 0.9 volts per cell. Discharging a battery beyond this point may introduce an explosion hazard caused by the generation of hydrogen gas.

c. Mercury Battery Explosions. Under excessive heat, mercury batteries are likely to explode. Sufficient heat to cause an explosion may be generated by accidental shorting or by incineration. Care should be exercised in using mercury batteries to prevent accidental shorting and they should be disposed of by means other than incineration, preferably by burial in nonconductive containers.

ELECTRICAL CIRCUITS

1525. WORKING ON ENERGIZED CIRCUITS

1. When Permissible. Repairs are not to be made on energized circuits except in an emergency. The commanding officer or his authorized representative shall determine whether an emergency exists. A circuit must be considered energized until it has been checked and the switch opened and tagged. (See article 1511 and paragraph 3 below.) A qualified supervisor shall be in charge of testing for voltage and installing grounds.

2. Personnel Involved

a. Requirements for Workers. Repair work on an energized circuit shall be performed only by personnel fully aware of the dangers involved, including those dangers encountered on the so-called lower potential circuits (below 600 volts) as well as those on higher voltages (above 600 volts.)

b. Supervisors. All work shall be supervised by qualified technicians or experienced communications or electronics material officers.

c. Standbys. Men should be stationed by circuit breakers or switches. Telephones should be manned so that circuits can be immediately deenergized in case of emergency. A man qualified to administer artificial resuscitation for electric shock (see article 1501. 12) shall stand by during the entire period the work is being performed.

d. Insulating Workers From Ground. Persons performing the work shall be insulated from ground and shall avoid possibility of contact with grounded hand rails and exposed metal deck or equipment frames.

3. Checking the Circuit. When a circuit below 600 volts is to be checked, the voltmeter or voltage tester should first be tested on a circuit known to be operating in order to determine if the testing device is in good condition. When voltages of 600 volts or more are to be measured, the following precautions are to be observed:

a. Preparing the Equipment

(1) Deenergize the equipment to be tested.

(2) High voltage capacitors and the terminals to which the test equipment is to be connected shall be discharged at least twice, with a minimum fifteen-second interval, by the use of a suitably insulated shorting or grounding bar.

(3) Attach a temporary but secure ground to the circuit.

(4) Ascertain that the test equipment controls are set correctly for testing of the high voltages.

(5) Connect to the desired test points, the test leads capable of safely carrying the high voltages.

(6) Remove the temporary ground from the circuit.

(7) Withdraw from the equipment under test, making sure that you are free from the leads and in a proper position for taking meter readings correctly.

b. Taking the Measurements

(1) Do not take the measurements directly, as by means of flexible leads or probes.

(2) Assign the responsibility of energizing the equipment to an assistant standing by the switch.

(3) Do not touch the test instruments while the power is on.

(4) After taking the reading, deenergize the equipment.

(5) Before removing the test leads, discharge high voltage capacitors and the terminals to which the test equipment is connected at least twice, with a minimum fifteen-second interval, by the use of a suitably insulated shorting or grounding bar.

(6) Attach temporary ground to the terminals to which the test instrument is connected.

(7) Remove the test leads.

(8) Remove the temporary ground.

(9) Repeat the above precautions for each measurement as applicable.

4. Precautions for Specific Voltages. Although many of the precautions listed for work with specific voltages relate to line work, the over-all safety measures relate to *all work on live circuits* and for that reason are included here with other general working rules.

a. Low Voltage Work, 0 To 600. Live conductors and equipment operating at 600 volts or less may be worked upon if the following requirements are met:

(1) Adjacent live or grounded conductors and equipment shall be covered with insulating material or approved rubber protective equipment.

(2) Two men should work together, particularly when work is done on energized parts carrying more than 150 volts, in wet weather, or at night. When working on energized lines a man should not change his position on a pole without first informing others working nearby.

(3) Bare or exposed places on one conductor must be taped or covered before another conductor is exposed.

b. Intermediate Voltage Work, 600 To 5,000 Volts

(1) Testing Voltage Meters. All conductors and equipment must be considered as carrying current and as being alive until it has been determined beyond doubt that they are dead. When positive proof as to whether a conductor or a piece of equipment is energized cannot be established by a visual check, an approved voltage detector is to be used. Before being used, the detector must be checked on a conductor that is known to be alive and a positive indication noted. This check on a known live conductor must be repeated after the test on a dead conductor has been made. When it is not possible to recheck the voltage detector on a live conductor, two voltage detectors should be used, one as a check against the other.

(2) Insulating Equipment. When work is to be done on or within reach of conductors or equipment operating between 600 and 5,000 volts, energized and grounded conductors or equipment within reach must be isolated with suitable barriers or covered with rubber hose line, insulator hoods, line protectors (pigs), or blankets. If it becomes necessary for the workman to change his working position he must cover or barricade any energized or grounded conductors or equipment that will be within reach in the new position.

(3) Deenergizing. When conditions permit, the section of the line being worked on shall be deenergized by opening the sectionalizing switches, and grounded.

c. High Voltage Work, 5,000 Volts and Over. Lines and equipment operating at 5,000 volts or over must be deenergized and grounded (see article 1512) before work is started, except in emergency repairs on overhead lines, which may be worked on alive with approved live-line tools.

(1) Precautions when circuit is deenergized. Work on deenergized circuits must be done between two sets of grounds, one set to be placed on the first pole or structure toward the source of energy and the other on the first pole toward the load. When grounds are to be attached, the ground connection must be made first. When grounds are to be removed the ground connection must be broken last.

(2) Using live-line tools. The following precautions must be taken when live-line tools are used:

(a) Work with live-line tools shall not be performed when rain or snow is imminent or falling, or when heavy fog, dew, or any form of excessive moisture is present.

(b) When working on lines energized at more than 5,000 volts, use approved hot-line tools without rubber gloves. Handle series street lighting circuits supported on arms with other lines energized at more than 5,000 volts, the same as the power supply conductors.

(c) No more than one conductor may be worked on at a time with live-line tools.

(d) Live-line tools must be kept dry and free from dirt. Tools which have been subjected to damp weather must be thoroughly dried and tested before being used again.

(e) Live-line tools being transported on line trucks shall be stored so as to prevent damage to them. Waterproof canvas bags may be used for this purpose. A compartment equipped with padded hooks or binds may be built into the truck for this purpose. See NAVDOCKS MO-200, *Electric Power Distribution Systems Maintenance.*

(3) Body clearance for high voltage work. A minimum body clearance from energized lines and equipment shall be maintained by men working on or around electrical equipment of high voltage, as shown in the following table:

Operating Voltage (Kilovolts)	*Minimum Distance (Feet)*
5 to 7.5	1
7.5 to 12	2
12 to 33	3
33 to 66	4
66 to 132	5
132 to 220	8

d. Live Line Barehand Work. The live line barehand technique utilizing the insulated aerial servicing platform is prohibited unless specific approval has been granted by the Naval Facilities Engineering Command in accordance with BUDOCKS Instruction 5100.10 of 7 January 1965.

LINE CONSTRUCTION AND DISTRIBUTION

1530. SCOPE

This section deals only with equipment and working precautions specifically applicable to line construction and distribution work. *Of primary importance to the safety of all workmen in the area is the employment of maximum precaution in working on circuits and equipment operating above 600 volts.*

1531. EQUIPMENT USED IN LINE WORK

1. Transmitting Tools and Equipment. Tools and other materials shall not be thrown or dropped down to personnel working on another level. They are to be raised or lowered by means of handlines or canvas toolbags or buckets. Workmen should stand clear when tools and other materials are being raised or lowered. They should not walk or stand under a load which is not properly placed and secured.

2. Safety in Using Tools

a. Using Portable Electric Tools. The cases of all portable electric tools, regardless of their voltage, which are held in the hands while being operated shall be grounded. (See article 1512). Care must be taken that the ground wire is not disconnected or broken.

b. Skinning Knives. Skinning knives shall not have sharp points. Knives with metal shanks extending through the handles shall not be used.

c. Pliers. Metal tool handles shall be covered in accordance with the methods described in article 1501.5.

d. Flashlights. Flashlights designed for holding in the hand shall not be used which have any exposed metal parts. Use of friction tape or other tape to cover exposed metallic parts in order to circumvent the intent of this regulation is strictly prohibited.

3. Proper Use of Protective Devices

a. Rope. (See NAVDOCKS MO-200).

(1) Rope which is used on or near energized equipment is to be free of metal strands.

(2) Rope shall be replaced when the strands become frayed.

(3) Tape, string, or marlin cord shall not be used to repair rope.

(4) Rope is to be kept free of foreign material such as bits of solder which could cut the hands or rubber gloves.

(5) If it is necessary to take hold of a rope passing through a snatch block or around a niggerhead, the hands shall be kept at a safe distance from block or niggerhead.

(6) Uncoiled rope or wire shall never be left unguarded where it creates a tripping hazard.

(7) Safety lines, handlines, and other ropes or wire are not to be hung from a pole in such a manner that they can in any way interfere with traffic.

b. Climbers. (See NAVDOCKS MO-200)

(1) Climbers are *not* to be worn when workers are working on the ground or on a ladder, standing on a rubber blanket, moving from job to job, or riding in a vehicle.

(2) Climbers shall not be used after the gaffs are worn to less than 1¼ inches measured on the underside.

(3) Gaffs should never be sharpened on the underside, except to make the shoulder. Such sharpening changes the angle to which the gaffs are set. When this angle is changed, the climber is unsafe for use. Because of the danger of removing the temper from gaffs, care should be taken to keep the gaffs cool during sharpening operations.

(4) Climbers equipped with extra-long spurs shall be used to climb poles which have not been barked or skinned.

c. Body Belts and Safety Straps. (See NAVDOCKS MO-200)

(1) Construction

(a) Body belts or safety straps which have been stitched across the width shall not be used.

(b) Tape shall not be used to mend, protect, or mark belts or straps.

(c) A leather thong with a wooden or fiber bar shall be used for holding tape which is to be used by the workman. The use of chains for holding tape is forbidden.

(d) A leather pouch must be used on the body belt for holding pliers. Wire keepers are prohibited.

(e) Snaps on safety straps must be of drop forged steel.

(2) Inspection and Repair. Body belts and safety straps are to be examined by the foreman during regular tool inspections. If there is any doubt as to the safety of a belt or strap it should be repaired or replaced at once.

(3) When Worn. A workman is to wear his safety strap when he is working on a pole, ladder, or structure.

(4) Placing the Safety Strap

(a) The safety strap is to be placed around a part of the structure which is of sufficient strength to sustain a man's weight and his equipment and shall be so placed that there is no danger of its slipping. (That is, it must be at least eighteen inches from the end of the part on which it is fastened.)

(b) Where possible, the strap should be placed under an arm or brace.

(c) It must not be placed around any part of a structure which is being removed.

(d) The strap shall rest flat against the surface without twists or turns.

(5) Securing the Strap

(a) While a workman is in a working position a snap must be placed in *each* D-ring. (When a strap is being worn but not in use both ends of the strap shall be snapped into the same D-ring.)

(b) When a workman is attaching the safety strap to the D-ring, he should not rely on the "click" of the snap-tongue as an indication the fastening is secure. Before placing his weight on the strap, he should determine that the snap and the D-ring are properly engaged. The tongue of the snap should be away from the worker's body when engaged in the D-ring.

(c) To prevent the snap from becoming disengaged from the D-ring, a workman should avoid pressure on the snap-tongue when leaning against equipment such as arms, pins, braces, wires, etc., which might cause the snap to open.

(6) Avoiding damage to strap. While climbing, a workman should exercise care to avoid his safety strap catching on pole steps. When climbing past a fellow employee whose safety strap is in place around the pole, he should be particularly careful not to damage that strap.

(7) Storage of belts and straps. Belts and straps are not to be stored where they are subject to damage from excessive heat or dampness.

d. Insulators. Insulators should be lifted by the tops to avoid cutting rubber gloves or hands on sharp edges of the petticoat. They should not be screwed down too tightly, as the tops may break off, creating sharp edges.

4. Handling Hot Solder and Compounds. The following precautions are to be observed in the handling of hot solder and compounds:

a. Keep furnaces far enough from manhole openings that there will be no possibility of hot metal or compound spilling into the manhole.

b. Never place a cold or wet ladle or other object in molten solder or hot compound.

c. When raising or lowering solder or compound, secure the pot with a hook and steady the line so that the pot will not swing excessively.

d. Stand clear when solder and compound are being raised or lowered.

e. Work from above or to one side while soldering.

f. Wear goggles when soldering large joints and tinning lugs and T connections.

1532. HANDLING WIRE

1. Handling Pay-Out Reels and Jumpers.

a. Wire must be removed from the underside of reels.

b. When the pay-out reel in a truck is being used to string wires near energized wires, the truck must be grounded.

c. When stringing wire near other wires, the man tending the pay-out reel must wear rubber gloves and should not allow any part of his body to come in contact with the wire being strung. When possible he should stand on dry lumber or other insulating material.

d. When a brake is to be used on a pay-out reel to prevent slack in the wire being strung, the brake should be applied to the rim of the reel and on the side opposite the direction in which the wire is being pulled. A crossarm or side arm may be used as a brake.

e. When work is done on jumpers, especially those that are long, the loose ends are to be held in the clear. If necessary, there must be a man at each end to hold them.

f. The ends of the tie wires must be kept coiled while they are being installed or removed in order to prevent the possibility of their accidentally coming in contact with an energized conductor.

2. Making Connections.

a. When possible, connections should be made when wires and other equipment are dead. Only the final connection should be made to the live conductor.

b. The ground connection must never be opened at the ground-pipe or at the ground bus-bar unless it has been disconnected first at the point of contact with the equipment it it is intended to ground. This will prevent the possibility of an accident if the ground wire or ground bus-bar should be alive.

c. When a ground wire on a pole is to be connected, the ground-pipe connection must be made first.

3. Removing Wires

a. Before a primary or secondary wire is removed, a workman must test it to determine whether it is dead. The man in charge shall recheck the wire to be sure it is dead.

b. A span of wire that is to be removed must be treated as alive, must have a rope attached to each end, and must be lowered only one span at a time.

c. When the take-up reel is used to coil wires being removed from line arms, the wires must be treated as alive. Wires being removed in this manner are to have a rope attached to the end farthest away from the take-up reel. The man tending the reel must wear rubber gloves.

1533. WORKING ON POLES, SCAFFOLDS, STAGING, AND TREES

1. Weather Requirements. Routine maintenance and construction work for which there is no emergency requirement should not be undertaken during severely stormy weather. Work on electrical distribution poles and towers should not be done during any wet weather conditions except for purposes of restoration of service in an emergency, in which case extreme care shall be taken to avoid possibility of electric shock due to wet or damp clothing or tools. On routine work, suspension of activity should be planned in accordance with prevailing and changing weather conditions so that power and communication lines may be safely left for continued operation until storms have abated and conditions are safe for this type of work.

2. Meeting Obstructions in Digging. When obstructions are encountered in digging operations the workman shall immediately notify the man in charge, who will arrange for the necessary precautions against such hazards as contacting live cables.

3. Securing Elevated Working Positions. When working in elevated positions, workmen must be sure their positions are secure. Every precaution must be taken to protect personnel below. Unless absolutely necessary, work is not to be performed directly beneath workers aloft.

4. Safety in Climbing

a. A workman shall never carry tools or materials in his hands while climbing.

b. Pins, braces, or guy wires shall not be used as handholds.

c. When more than one man is to ascend or descend, the first man must reach either his new working position or the ground before the second man starts to ascend or descend.

d. A workman shall never loop a rope over his hand or arm while climbing, since it may cause him to fall. He should loop one end of the rope over his pliers or connectors.

5. Special Precautions for Working on Poles. The following precautions are to be observed in connection with work on poles:

a. Poles that appear unsafe for a man to climb must be properly braced or guyed.

b. Special care must be observed in checking pine poles, as they deteriorate quite rapidly.

c. If a pole is unsound, it must be supported with pikepoles or guy lines before wires are removed or excavation started.

d. Wires and supporting guys must not be removed from a pole until the condition of the pole butt has been determined.

e. While a man is climbing or working on a pole, he is to watch for and report such dangerous conditions as defective guys, braces, or arms, rusted hardware, and other hazards.

f. The insulating value of a wood pole is not to be depended upon.

g. When it is necessary to move a pole from one point to another, nearby workers who might be struck by the pole are to be warned. A man with a red flag is to warn or stop traffic.

6. Special Precautions in Working on Trees.

The following precautions are to be observed in connection with working on trees:

a. **Preparing the Tree**

(1) Do all possible trimming of the tree from the ground or from a ladder.

(2) If at all possible, remove with a pruner all branches which touch wires energized at more than 300 volts

b. Climbing the Tree

(1) Ascertain whether it is safe to climb a tree by inspecting the trunk at a point near the ground.

(2) Wear rubber-soled shoes or rubbers, if possible, when climbing trees.

(3) Do not wear climbers, except when trees are to be removed; then wear them only under the supervision of the man in charge.

(4) Be particularly careful while climbing trees in wet weather, and use extreme care during winter months, as branches are usually brittle when cold.

(5) Observe special care when climbing softwood trees or trees growing close to buildings. In such cases the roots may be rotted or may have grown in one direction.

(6) Keep feet as close to the main stem as possible when stepping on branches.

(7) Remove dead limbs and stubs while climbing in order to minimize hazards when descending.

(8) Do not rely on decayed limbs or small branches for support.

c. Cutting the Limbs

(1) Saws shall be used for cutting trees. Never use hand axes, chopping axes, chisels, or draw-knives.

(2) Tie the butt end of a large limb in place with a sling or a bull rope before the cut is started.

(3) Never sit on, or attach safety belt to, a limb which is being removed.

(4) Never cut limbs directly overhead unless absolutely necessary.

(5) If it is necessary to work from a position toward the end of a limb, first secure the limb with a bull rope or sling attached to the main stem of the tree trunk. Tie the supporting rope to the trunk at a point well above the limb to be supported, or to a sufficiently strong limb above. As an additional protection, secure a line over a crotch of the main stem of the tree trunk and attach the other end to your safety belt.

1534. WORKING WITH POTHEADS

1. Purpose of Potheads. A pothead is a form of terminator usually used in power and telephone distribution. It may have terminals accessible for testing, or it may have a junction block to facilitate the connecting of cable and wire. It is designed to be hermetically sealed to the cable to exclude moisture.

2. Safety During Work

a. Opening And Closing Circuits. When opening and closing circuits by means of potheads, open the neutral pothead last and close it first.

b. Use of Insulation. Do not stand on a concrete floor or on the ground while working with potheads in manholes or vaults. Use an insulated stool, a crossarm, or other dry lumber. Carefully cover grounded framework. Be particularly careful in locations where water is present.

c. Avoiding Grounded Equipment. Stay clear of grounded equipment when working on or near potheads.

1535. WORKING ON UNDERGROUND SYSTEMS

Manholes, vaults, and tunnels may contain toxic or explosive atmospheres. The pertinent precautions prescribed in Chapter 20 shall be applied before entering such spaces.

ELECTRONIC SAFETY

1540. SCOPE

Although certain areas of electrical and electronic safety are generally similar and safety factors of one usually apply to the other, the present-day use of electronics in radar, sonar, communications, television,

guidance control and other electronic systems makes it necessary that the safety requirements for electronics be expanded and treated as a separate field in itself.

On board ship, particularly, personnel should be made aware of the need for special precautions relating to electronic devices. Therefore personnel shall have a thorough knowledge of the following safety rules in addition to those in the previous articles.

1541. R–F WARNING SIGNS

R–F hazards signs shall be displayed in areas where the power of radio frequency radiation is sufficient to introduce a hazard to equipment or operating personnel (see article 1543). Requirements for other electrical and electronics hazard signs are contained in article 1501.10.

1542. ELECTRONICS – GENERAL

1. Precautions With Radio Frequency Circuits. Detailed safety in the operation of electrical circuits is prescribed in article 1525. Due to the general use of radio throughout the Navy, however, the following precautions for radio frequency circuits are emphasized:

a. High-Voltage Circuits. Energized high voltage circuits should not be broken except when absolutely necessary and then only when authorized by a qualified officer or other responsible official.

b. Adjacent Equipment. When other transmitting equipment is in use at the same installation or close by, workers should take precautions to prevent shock, burns, or other injury to themselves due to energy picked up from adjacent antennas or equipment. Circuits should be grounded to protect against such shock or burns. If the location of the protecting ground is not in the immediate area of the working party, suitable warning tags shall be employed to prevent unauthorized removal of the protective ground.

c. R–F Insulation. Contact with the insulation on wires carrying R–F current shall be avoided. This insulation can act as the dielectric of a condenser when contacted, thus causing shock or burn injury to personnel.

2. Preventing Shock from Capacitors and Pulse Forming Networks. Extreme caution shall be taken prior to working on or near deenergized circuits which employ large capacitors or pulse forming networks. A suitable grounding or shorting bar shall be used to short circuit all terminals and contacts to ground. This precaution shall be taken regardless of the length of time the equipment has been deenergized. Some pulse forming networks are capable of retaining their charge several hours after the equipment is secured and all power disconnected.

3. Hazards of Ungrounded Units. The chassis and frames of all power supplies and high voltage units removed for servicing shall be grounded and all circuits which are normally grounded in operation shall be grounded prior to applying power to the unit. Personnel must remember that the removal of a unit or part from the normal location within an assembly and the energizing of the unit or part, while it is outside of the normal enclosure, removes the protection given by built-in protective features such as interlocks, grounds, and enclosures. Since these safety features then no longer exist, special precautions and safety measures must be taken.

4. Interlocks and Safety Devices. Safety devices on electronic equipment such as interlocks, overload relays, and fuses, shall not be altered, disconnected, or modified without specific authority.

5. Servicing and Adjusting. No person shall reach within or enter energized electronic equipment enclosures for the purpose of servicing or adjusting, except when prescribed by official applicable instruction books, and then only with the immediate presence and assistance of another person capable of rendering aid in an emergency. Caution shall be exercised when reaching into the enclosure of equipment having high voltage points. The metal shields or shells of some capacitors, klystrons, cathode ray tubes, and other components are at high potential above ground. Maintenance personnel shall be cautioned prior to servicing equipment which contains such components.

564-350 O - 74 - 19

6. Precautions During Overhaul and Repair.

Although local safety officials of a shipyard or repair facility will normally notify the commanding officer when electronic safety measures are required, ship's transmitting equipment shall be secured when:

a. Overhead cranes are operating in the close proximity of the transmitting antennas.

b. Personnel are removing rigging or structures aloft.

c. Transporting, loading or unloading aircraft, ammunition, volatile liquids or explosive gases on the adjacent dock or on other ships' barges in the near vicinity.

7. Energizing When Ship is in Drydock. The electronic equipment of a ship may be energized only with the express permission of the docking officer. The hull must be adequately grounded. Excitation is not to be applied to sonar transducers unless properly immersed. Sonar hoist mechanisms are to be operated only after it has been definitely ascertained that adequate clearance exists for the moving elements within their full limit of travel and that no mechanical damage will be incurred by such operation. This determination is to be made as soon as practicable after the dock is emptied. If sufficient clearance does not exist, positive steps shall be taken to prevent lowering of the transducer by gravity, manual, or power operation.

1543. RADIO-FREQUENCY EVALUATION HAZARDS

Radiation of electromagnetic waves in the radio-frequency (rf) range can create hazards in various ways depending on the frequency and power of the incident wave and on the nature and configuration of the receiving object. Of particular concern is the possibility of injurious heating of the human body upon exposure to microwave radiation and the induction of voltages in metallic structures and objects which, under optimum conditions, may result in the propagation of rf arcs and the initiation of electroexplosive devices. These hazards may be classified into three categories: hazards to personnel, hazards to flammable vapors, and hazards to ordnance. The technology involved in the assessment of the hazards in any particular radio frequency radiation problem being beyond the scope of this manual, general safety personnel are advised to consult with cognizant electronic engineers. The necessary general and theoretical analyses and detailed restrictions are given in NAVWEPS 16-1-529, *Radio Frequency Hazards Manual* and NAVSHIPS 0900-005-8000, *Technical Manual for Radio-Frequency Radiation Hazards*. The following discussion of the principal hazards involved are presented in general terms to provide safety personnel with sufficient information for the recognition of possible hazardous conditions

1. Hazards to Personnel. Radio frequency electromagnetic radiation can be hazardous to personnel in two ways. One way is by direct exposure to high density radiation where the body may be damaged by heat. A second way is by exposure to electric shock caused by rf potentials induced in metal objects that may be contacted by personnel.

a. Hazards of High Density RF Fields. Existing radar systems radiate energy in the radio-frequency band between the VHF (short wave) radio and infra-red regions and exhibit characteristics of each, such as the effects of heating and penetrating a biological system such as the human body. The presently known injurious effects of overexposure to microwave radiation are dependent on frequency and average power, and are evidenced by an increase in overall body temperature or as a temperature rise in sensitive organs of the body such as the eyes. When conditions of possible injurious exposure exist, the following precautions apply:

(1) Visual inspection of feed horns, open ends of wave guides, and any opening emitting rf electromagnetic energy shall not be made unless the equipment is definitely secured for such an inspection.

(2) Dummy loads shall be used where practical during tuning, testing or repairing rf transmitting equipment.

(3) Aircraft employing high power radar shall be parked or the antenna rotated so that the beam is directed away from personnel working areas.

(4) Ensure that radar antennas which normally rotate are rotated continuously while radiating, or are trained to a known safe bearing.

(5) Train and elevate non-rotating antennas away from inhabited areas while radiating.

(6) When it is necessary to radiate hazardous levels of rf energy, appropriate rf warning signs shall be posted and entrance into such areas shall be prohibited (see article 1501.10e).

(7) Minimum safe distances from radar antennas shall be maintained by all personnel. The minimum safe distances from specific radar antennas and the maximum exposure time within these distances under certain modes of operation are listed in NAVWEPS 16-1-529 and NAVSHIPS 0900-005-8000. The distances and times apply only in areas that are in or near the main beam of the antenna.

b. Hazards Due to Electrical Shock in RF Fields. RF potentials induced in metal objects may be sufficient to cause electric shock when contacted by personnel. Although usually insufficient to electrocute personnel directly, the shock may cause the person involved to react violently and thereby cause injury due to falling or striking some object. Examples of metallic objects that may have sufficient rf voltage induced in them to constitute an electric shock hazard are as follows:

Smokestack guys
Railings
Aircraft
Lengths of wire cable
Antennas

Personnel working near such objects should be aware of the potential hazard and ground the objects when possible. It should be noted that a single ground, or several grounds, do not necessarily provide an rf ground for all surfaces of a large metallic object.

2. Hazards to Flammable Vapors. The increase in radiated rf energy from high powered communications and radar installations now used in the Navy has increased the potential hazard of rf induced ignition of flammable liquid air mixtures. The possibility of such ignitions is dependent upon the existence of optimum conditions involving vapor-air mixture proportions, proximity of flammable liquid handling operations to the radiating source, configuration of equipment involved, and frequency and power of the rf radiation. Detailed discussion of these optimum conditions and appropriate precautions are contained in NAVSHIPS 0900-005-8000. Although this NAVSHIPS manual is concerned primarily with the hazards and precautions pertaining to aircraft fueling operations aboard ship, the principles and procedures are generally applicable to the assessment of flammable liquid handling operations ashore.

3. Hazards to Ordnance. Radio frequency electromagnetic radiation can cause accidental firing of electroexplosive devices used for initiating booster rockets, warhead detonation and other purposes. Grounding or shorting of the electroexplosive device is not sufficient to assure safe handling in areas where rf electromagnetic radiation exists. The precautions to be followed in avoiding such accidental ignitions are contained in NAVWEPS 16-1-529.

1544. X-RAY RADIATION HAZARDS FROM HIGH VOLTAGE ELECTRONIC EQUIPMENT

1. Hazardous Voltage. When high velocity electron beams strike metal or certain other materials, X-rays are produced. The operation of some electronic devices depends on the acceleration of electrons, and when the accelerating voltage approaches or exceeds 15,000 volts the production of X-rays may become a hazard to personnel. Examples of such electronic devices are magnetrons, klystrons, thyratrons, cathode ray tubes and high voltage rectifier tubes. Currently, radars are about the only electronic equipment that use sufficient voltage on these devices to constitute a hazard. The

X-rays produced by accelerating potentials in the order of 15,000 volts are not hazardous beyond a foot or so from the source and do not require elaborate shielding to make the device safe for nearby personnel. However, as the accelerating potentials become greater than 15,000 volts, the X-rays produced have much greater energy and the difficulty of providing adequate shielding increases appreciably.

a. **Servicing Electronic Devices That Produce X-ray Hazards.** When performing preventive or corrective maintenance on electronic devices that produce hazardous X-ray radiation as an undesirable by-product, the following precautions should be observed by maintenance personnel:

(1) Observe all warning signs on the equipment and all written safety precautions in the instruction manuals for the equipment that deals with X-ray hazards.

(2) Do not use jumper interlocks that permit the servicing of operating equipment with the protective X-ray shielding removed, unless such procedures are called for in the instruction manuals.

(3) Be sure to replace all protective X-ray shielding when servicing is complete, so that operating personnel or others will not unknowingly be subjected to harmful X-ray radiation.

(4) When bench testing X-ray producing electronic devices be sure that adequate X-ray shielding is provided to protect all personnel in the testing area.

(5) Determine the latest safety precautions to be observed by maintenance personnel, including the use of the latest approved dosimeters, by consulting the ship's safety officer on shipboard or the industrial hygienist at shore installations.

1545. WORKING ON ANTENNAS

1. **Cautions to Personnel.** Supervisors shall caution all men not to venture or work close to an exposed radio or radio antenna unless it is first determined from the proper authority that the antenna is not and will not be energized. (See also article 1543.)

2. **Danger From Rotating Antennas.** Radar and other antennas which rotate or swing through horizontal or vertical arcs may cause men working aloft to fall. Therefore, the motor switches which control the motion of these antennas should be secured or locked in the open position and suitably tagged before men are permitted to ascend or go within reach of the antenna.

3. **Antenna Poles.** To secure antenna pole guys, see Chapter 8 for rigging precautions and wire rope safety.

4. **Aircraft Antennas.** Before operating transmitters in aircraft, inspection shall be made of the antennas to insure that they are not touching fabric-covered portions of another aircraft parked nearby, and are not within hazard range of personnel, fuels, or ordnance. (See article 1543.)

5. **Safety Belts.** Safety belts shall be worn by all personnel climbing radio antenna towers and radiators and other types of towers over 30 feet high. Where ladder climbing safety devices are provided on such towers, a special safety belt shall be provided with an appropriate connection and shall be used by workmen when ascending or descending the tower. Such a special safety belt and connection shall be in accordance with specifications given in the *Safety Equipment Manual, NAVEXOS P-422*. Except when the ladder safety device is used, the safety belt shall be tied off to a life line at all times if it is physically practicable to do so.

6. **Antenna Tower Ladders and Platforms.** Fixed ladders and platforms on antenna towers of all types shall be constructed in accordance with the latest issue of USA Standard, *Safety Code for Fixed Ladders,* A14.3.

1546. CATHODE RAY TUBES

Cathode ray tubes are highly evacuated. These tubes shall be handled with extreme care. If a cathode ray tube is broken, the relative high external pressure will cause the tube to implode (burst inwardly), which will

result in metal parts and glass fragments being expelled violently.

1. **Handling.** In handling, the tube shall be removed and replaced in the packing box with extreme caution (do not drop). The tube face, particularly the rim, must not be struck, scratched, or subjected to more than moderate pressure. When a cathode ray tube is removed from a unit, it should not be allowed to remain exposed to damage or shock on work benches, etc., but should be immediately placed in the container provided for that purpose or in the container that held the replacement tube.

2. **Maintenance.** Maintenance or installation personnel shall wear safety glasses and gloves when handling cathode ray tubes. When removing or inserting tubes in equipment sockets, use only moderate pressure; do not jiggle the tube or stand directly in front of the tube face. Any securing clamp around the rim or face of the tube shall be carefully secured.

3. **Disposal.** Defective tubes shall be stored or destroyed in such a way that no danger results to personnel. In addition to the danger involved in implosion, the inner coatings of some tubes are poisonous if absorbed into the blood stream.

1547. RADIOACTIVE MATERIALS USED WITH RADIAC EQUIPMENT

There is a large variety of types and sizes of radioactive material used in calibrating or checking radiac equipment. The use of the larger sources is restricted to authorized radiac repair facilities. Smaller sources, although also of possible danger, are supplied with equipment for the purpose of field checking the instruments. Proper use or handling of these sources is covered in the technical manuals for the equipments with which they are supplied. If these instructions do not cover the proposed use of the source under consideration, its proposed use should be referred to local health or safety personnel. Even in storage, radioactive materials may be harmful to personnel and may expose unprocessed photographic and radiographic films and papers. Precautions must therefore be observed constantly to protect personnel and vulnerable materials from these radiations. More detailed information on the handling and storage of radioactive material and the safety precautions to be observed is contained in *NAVMED P-5055, Radiation Health Protection Manual*, and Bureau of Ships Instruction 9763.14A.

1548. ELECTRON TUBES CONTAINING RADIOACTIVE MATERIALS

Some electron tubes contain a significant amount of radioactive material and are marked in accordance with military specification MIL-M-19590. The hazard of handling individual electron tubes containing radioactive material is primarily that of contamination of personnel and surrounding material with radioactive fragments resulting from breakage. In the event of breakage, approved methods of monitoring, decontamination, and disposal shall be employed. Under no conditions should unauthorized persons handle broken or unbroken electron tubes containing radioactive material. Broken and useless tubes containing radioactive material, such as radiac spark gap, TR, glow lamp, or cool cathode tube should be treated as any other radioactive waste material and disposed of in accordance with instructions contained in NAVMED P-5055.

1549. SONAR

All operating sonar equipment is capable of causing physiological injury to divers and swimmers in their vicinity. To prevent such injuries, safe distances and staying times are promulgated in certain classified NAVSHIPS directives. These directives shall be consulted when conducting diving operations in the vicinity of operating sonar sets.

LASER SAFETY

1550. SCOPE AND DEFINITIONS

1. **Scope.** The following precautions are applicable to laser employed in research and development projects and as utilized in operational equipment and weapons systems.

2. **Definition.** The term *LASER* is an acronym derived from *L*ight *A*mplification by *S*timulated *E*mission of *R*adiation. Laser sources differ from conventional light emitters in that the light generated is highly coherent (in phase) and concentrated such that high intensities are transmitted at considerable distances. *CW Laser* is *c*ontinuous *w*ave laser as distinguished from a *Pulsed Laser*.

1551. HAZARDS

A number of hazards are associated with the installation and operation of laser devices (see NAVMED P-5052-35, *Control of Hazards to Health from Laser Radiation*):

1. High intensity light radiation can result in:

a. Serious eye injury and burns to exposed body parts.

b. Ignition of flammable or combustible materials and sensitive ordnance components.

2. High voltage in the circuitry of power sources introduces the possibility of:

a. Fatal or injurious electric shock.

b. Explosion of highly charged capacitor banks.

c. Injurious X-radiation from susceptible electronic components operating at voltages in excess of 15,000 volts.

3. Pulsed and exciter electronic circuits of associated equipment may radiate hazardous radio-frequency energy (article 1543).

4. Physical hazards associated with exploding flash lamps, high speed rotating mirrors, toxic gases used in some types of CW gas lasers, and with cryogenic coolants used in devices having very high input energies.

1552. LASER INSTALLATIONS

1. Wherever feasible laser equipment should be located in a room separated from general laboratory areas or contained in a light-proof enclosure. Lasers with power outputs (mega and gigawatt range) exceeding the capabilities of protective devices shall be housed in an area to which personnel will not be allowed access during operation.

2. Laser spaces shall be free of reflective surfaces or objects, particularly in the target area.

3. Work with lasers shall be done in areas of high general illumination, except where accomplishment of a mission would be impaired.

4. A warning sign or signs such as that of Figure 3 of NAVMED P-5052-3 shall be permanently posted at all entrances of the laser enclosure.

5. Pulsed and CW laser installations with reflected intensities exceeding those levels listed in Table 1 of NAVMED P-5052-3 shall:

a. Have safety interlocks at entrances of the laser space such that unauthorized or transient personnel are denied access while the laser power supply is charged and capable of firing. When interlocks are actuated, a fail-safe circuit shall de-energize the laser system within 5 seconds.

b. Have an alarm system including an audible signal and flashing lights (visible through laser safety eyewear) which are actuated when the laser power source is being energized (e.g., capacitor banks begin to charge, CW laser power supply is energized (before laser tube is switched on) or chemical pump energy source is energized).

c. Be free of extraneous reflective surfaces or objects particularly in the target area. Walls and ceilings should be painted with a diffuse nongloss paint, preferably black, near the target area and a light color elsewhere to increase ambient illumination.

d. Have adequate ventilation where inert liquefied coolant or toxic gases are used in the system.

e. Have a master electrical power shut-off outside the laser enclosure.

1553. LASER EQUIPMENT

1. Electrical and electronic circuits associated with laser apparatus shall be installed in accordance with the applicable requirements of this Chapter and Requirement 1 of MIL-STD-454, *Standard General Requirements for Electronic Equipment.*

2. Firing systems shall be designed with fail-safe controls in order to prevent the possibility of firing the laser accidentally.

3. Laser equipment components that can produce extraneous direct, deflected or reflected radiation of harmful visible, ultraviolet, or infra-red light; X-ray or radio-frequency energy shall be shielded. Flash lamps, rotating parts, capacitor banks, and other components that can fail and thereby produce hazardous flying pieces shall be shielded.

4. A suitable fire-resistant low-reflective material shall be provided as a backstop for the beam of carbon dioxide-nitrogen gas lasers.

5. Safety precautions and safe operating procedures shall be posted in accordance with Chapter 1.

6. Systems employing liquid nitrogen as a coolant shall comply with NAVWEPS OP-3199 publication.

1554. OPERATING PRECAUTIONS

1. Wherever possible aligning the laser beam with the naked eye must be avoided and looking into the primary beam or its reflections is prohibited.

2. Highly portable lasers shall be turned on only after an alignment check.

3. Care shall be taken that the laser beam is not directed at flammable and combustible materials or in the area of sensitive ordnance material.

4. The beam shall be discharged into a non-reflective and fire-resistant background. All extraneous reflective objects in path of beam shall be removed.

5. Laser equipment shall never be left unattended while energized and shall be discharged when shut down.

6. The countdown procedure shall be employed when firing pulsed and CW lasers having reflected intensities exceeding those levels listed in Table 1 of NAVMED P-5052-35.

7. The operation, maintenance, and repair of laser electrical and electronic circuits shall be performed in accordance with the applicable parts of this Chapter.

1555. PERSONNEL PRECAUTIONS

1. During the firing of a laser, personnel shall wear protective eyewear in accordance with the criteria of paragraph 8a(7) of NAVMED P-5052-35. Lenses shall be marked to show the optical density and wavelength for which they are intended to provide protection.

2. Those in charge of laser facilities shall be competent in laser technology and operation. All personnel assigned to work with lasers shall be fully instructed with respect to the hazards involved, safety precautions, and the use of safety devices.

3. Only authorized personnel shall be permitted to set up, adjust, or operate laser equipment.

4. When working on electrical and electronic components of laser equipment, personnel shall observe the safety precautions and use the protective clothing and devices required by this Chapter.

5. When working on liquefied nitrogen cooling systems or when handling the liquefied nitrogen, personnel shall observe the safety precautions and use the protective clothing and devices stipulated in NAVWEPS OP-3199.

1556. FIELD PRECAUTIONS

The environmental and operational controls which are practicable in the laboratory, of necessity, may not be feasible under field conditions. However, the precautions listed above and those following should be enforced in laser exercises in the field wherever practicable:

1. The laser should be treated as an ordnance piece, and laser operation and test should be confined to gunnery or missile ranges or other sites where similar security and safety measures are in force.

2. Personnel should be excluded from the beam path to a distance where the energy is within permissible levels. This may be accomplished by the use of physical barriers, administrative control, interlocks, or by limiting beam traverse.

3. Tracking of non-target vehicular traffic or aircraft should be prohibited if within calculated hazardous distances.

4. The beam path should be devoid of objects or area capable of producing hazardous reflections.

5. A permanent log should be maintained, including the date, time, place, type of device fired, bearing of beam, and roster of participating personnel.

Chapter 16

MEDICAL FACILITIES

1601. HANDLING AND STORAGE OF GASES

Cylinders containing compressed gases such as anesthetic gases, oxygen or other gases used for medical purposes shall be handled and stored in accordance with the following National Fire Protection Association publications:

NFPA No. 56 – *Flammable Anesthetics Code* (NAVMED P-5040).

NFPA No. 565 – *Standards for Nonflammable Medical Gas Systems.*

NFPA No. 566 – *Standards for Bulk Oxygen Systems at Consumer Sites.*

1602. X-RAY DEPARTMENT

The following precautions relate to the construction of X-ray rooms and equipment and their use. For details of maximum permissible exposure see NAVMED P-5055.

1. X-Ray and Control Rooms. X-ray and control rooms shall be located in an area free from dampness and with adequate ventilation and light. The control room shall always be so placed in relation to the treatment or examination room that the operator has a clear view of the latter at all times.

2. Installation and Care of X-Ray Equipment

a. Connections To Power Mains

(1) X-ray installation connections to power mains shall be in accordance with the regulations of the National Electrical Code.

(2) Suitable switches shall be inserted in the lines between transformers, rotary converters or motor generators and the X-ray apparatus.

(3) All X-ray equipment shall be provided with a quick-acting magnetic overload circuit breaker interposed between the transformer and the supply circuit.

(4) High tension generators shall be made inaccessible by means of an insulating barrier or shall be installed in separate rooms.

b. Grounding. All metal parts of X-ray equipment, including tube stands, transformers, tanks, motors, and controls, shall be permanently grounded.

c. Use of X-Ray Equipment In Anesthetic Rooms

(1) All open high-tension generating equipment shall be located in a well ventilated room which is completely isolated from the anesthetic room, and any connecting doors or windows shall be effectively airtight. (The doors should close against soft rubber or felt padding.)

(2) A completely self-contained transformer and X-ray tube unit, in an effectively airtight enclosure, is recommended for use in all anesthetic rooms. Foot switches and all other control devices shall be of a type approved for use in explosive atmospheres. (See the National Electrical Code, and Volume 1 of the National Fire Codes published by the National Fire Protection Association, 60 Batterymarch St., Boston, Massachusetts, 02110.

d. Storage of X-Ray Film. Only film of the slow-burning or safety-base (cellulose acetate) type shall be used. This film presents no greater fire hazard than ordinary newsprint paper in the same form. Should it become necessary to use other than the safety type film, the safety regulations of the National Board of Fire Underwriters applying to the use and storage of nitrocellulose films should be followed.

3. Protection From Direct Radiation

a. X-Ray Tubes. Tubes having built-in protection, or which are in special protective containers, shall be used to replace obsolete installations.

(1) Enclosure. The protective enclosure shall surround the X-ray tube bulb and the arms for a distance of four inches from the bulb, so that direct radiation is shielded off in all directions. Open bowls shall not be used. The equivalent of 1.0 mm of aluminum shall be permanently mounted between the target and the patient in all fluoroscopic-tube enclosures, and 0.5 mm of aluminum in all radiographic enclosures. Part or all of this aluminum may be contained in the glass of the tube walls. The diaphragm of the tube container shall have a permanent covering of asbestos board at least 0.5 mm. thick placed between the tube and filter, and next to the filter. When the total exposure exceeds previously determined limits, the use of an accumulative timing device is recommended.

(2) Filter. In all therapy work, suitable means shall be provided to prevent accidental omission of a filter.

(3) Applying Tube Voltage. X-ray tubes in shock-proof containers shall never be handled during an operation. The patient shall be positioned, all details arranged, and the operator out of the room before the tube voltage is applied.

b. Personal Protection

(1) Clothing. The medical officer and other X-ray personnel shall be protected from direct radiation.

(2) Use of Protective Tubes. Properly and adequately protected tubes and enclosures, as described above, shall be used.

(3) Control Apparatus. Control apparatus shall be in an adjacent room. If this is impossible the apparatus shall be in a lead-lined booth.

(4) Protective Screens. Movable, upright, protective screens are dangerous and should be replaced by more permanent shielding. Careless handling of this type of screen can make it useless. If portable screens are used, great care must be taken to position them properly.

c. Examinations. All X-ray protective devices, including wearing apparel, shall be examined at least annually for efficient barrier protection.

d. Rotation of Personnel. All persons employed in the X-ray department shall be rotated monthly between duties involving possible exposure and exposure-free work.

4. **References.** Attention is directed to the following material dealing with the broader aspects of medical X-ray application:

Handbook No. 41, National Bureau of Standards, Washington, D. C.

1603. AMBULANCE SAFETY

1. **Equipment.** Ambulances shall be in good mechanical condition at all times. All equipment shall be operative and shall be standard according to local practice. Ambulances using public highways shall be equipped with emergency first aid equipment.

2. **Permit.** Drivers shall have a United States Navy motor vehicle operator's permit, as required by NCPI 5100.9.

3. **Briefing of Drivers.** Drivers shall be fully conversant with local traffic regulations and local geography. Strict supervision by the transportation officer is essential in this connection.

4. **Orders and Accident Forms.** Each ambulance shall carry a book or board embodying carefully considered orders and safety precautions prescribed by the local command for the locality, and similar orders shall be posted in the garage. Each ambulance shall carry forms for reporting accidents and the driver shall be instructed as to their use.

5. **Observance of State and Local Requirements.** All ambulance drivers must satisfy state and municipal requirements as to age and other qualifications.

Chapter 17

LABORATORIES

1701. GENERAL

1. **Regulatory Difficulties.** Laboratory work by its very nature is not readily adaptable to ordinary safeguards and precautions. Much of the work will be in relatively unexplored fields in which the characteristics or behavior of the subject are yet to be determined. The operator of every test or equipment should carefully analyze the procedure to be followed and should take all necessary steps to protect himself and his fellow workers from any possible accident. Where the nature of the work will permit, the practices listed in this chapter are to be followed in the laboratory.

2. **References.** Detailed information on the use of compressed gas cylinders, various hydrocarbon fuels, cleaners and solvents, radioactive materials, and other subjects related to laboratory work is contained in Chapter 20. No attempt has been made to cover every possible laboratory hazard. Individual laboratories should prepare their own safety precautions to fit specific operations. Chemical laboratories should refer to the Chemical Safety Data Sheets published by the Manufacturing Chemists Association of the United States. Laboratories working with explosives or propellants should refer to NAVWEPS OP 3237, *Explosive, Propellant, and Pyrotechnic Safety Covering Laboratory, Pilot Plant, and Production Operations*.

3. **Inspection.** Laboratory space and equipment shall be inspected at frequent and regular intervals in an effort to eliminate unsafe conditions and prevent unsafe acts before accidents occur. Where new research projects are contemplated, the Safety Officer should be consulted in the planning phases of the project and should inspect the area to insure that prescribed safety precautions have been complied with. A formal report should be submitted after each inspection to the person having cognizance over that area.

4. **Housekeeping.** Good housekeeping is essential for the safe operation of all laboratories. Main aisles and exits shall be free from such obstructions as bottles, boxes, etc. Floors should be clean and free from oil, water, and other material which may cause slipping. Equipment, rags, reagents, etc., should be returned to their proper location immediately after use. All containers must be clearly marked and correctly labeled. Waste shall be deposited in metal containers having self-closing covers. Separate containers shall be provided for broken glassware.

5. **Distracting Attention.** Laboratory employees shall pay strict attention to their work. Employees shall avoid unnecessarily distracting other employees. Equipment requiring constant attention shall not be left unattended.

6. **Horseplay.** Horseplay will not be tolerated in any laboratory at any time. Running is forbidden, except in cases of emergency. Liquefied gases, dry ice, air hose, and knives, for example, should never be used as playthings.

7. **Procedure in Emergencies.** Definite procedures should be established under the guidance of the Safety Officer in each laboratory for the handling of such emergencies as fire, explosion, unexpected release of toxic fumes, etc.

1702. PERSONAL PROTECTION

1. **Clothing.** Suitable clothing for laboratory employees shall be worn in accordance with NAVEXOS P-422, *Safety Equipment Manual*.

2. **Goggles.** Laboratory employees shall be required to wear protective goggles or protective face shields when there is any possibility of explosion, implosion, violent chemical reaction, splashing chemicals, injurious radiation, or other occurrences hazardous to the eyes.

3. **Showers and Fountains.** Deluge showers and eye-flush fountains should be provided if exposures encountered point to possible need for them.

4. **Washing Hands.** Traces of laboratory chemicals left in contact with the skin may produce dermatitis or severe burns. It is an excellent practice to wash the hands and arms frequently during the course of the day.

5. **Gas Masks.** An all-purpose gas mask should be available for emergencies. All personnel should be indoctrinated in its use.

6. **Monitoring of Air.** In cases where toxic materials such as the metals or compounds of barium, beryllium, arsenic, selenium, tellurium, osmium, uranium, thorium, etc., are being handled, a systematic program of monitoring breathing air should be established.

1703. LABORATORY EQUIPMENT

1. **Standards.** Mechanical and electrical equipment in the laboratory shall conform to standards for installation and guarding as outlined elsewhere in these regulations. If the nature of the work is such that it is impracticable to meet these standards, other precautions shall be taken to prevent injury to personnel.

2. **Illumination.** Illumination shall be adequate for the type of work being performed, as specified in article 0213. Electrical fixtures and equipment shall be of such design and so located as not to present fire or explosion hazards.

3. **Use of Hoods.** Laboratory processes which give off toxic vapors or gas shall be vented outside the laboratory. Laboratory work involving toxic materials such as elemental compounds of barium, beryllium, selenium, tellurium, osmium, uranium, thorium, etc., should be performed only in areas with approved hood installations. Flammable vapors and gas shall be vented in such a manner that motors, switches, and lights do not provide a source of ignition. Inhalation of vapors, fumes, gases, and dusts should be avoided by using an efficient fume hood for all work in which such harmful substances are used or formed. A good hood should have air drawn into it at the rate of not less than 100 linear feet per minute. Additional information on ventilation will be found in article 0212.

4. **Compressed Gas Cylinders.** Compressed gas cylinders shall be stored, handled, and used in accordance with the regulations of Chapter 20.

5. **Equipment Under Pressure or Vacuum.** Equipment under pressure or vacuum shall not be subjected to pressures in excess of that for which it was designed. If the pressure cannot be predetermined or if there is any possibility of rupture, the operator shall be protected by a suitable shield or screen of sufficient strength to protect him from flying material. Exhausts from mechanical vacuum pumps should be vented to the outside. Inhalation of atomized oil vapor is injurious to the lungs.

6. **Laboratory Ovens.** Laboratory ovens used to dry samples of explosives or highly flammable materials should have the latches removed from the doors. Chemical compounds or mixtures containing volatile, flammable liquids should be dried in steam or hot water jacketed ovens only.

1704. LABORATORY GLASSWARE

1. **Use of Cork Borer.** Improper or careless handling of a cork borer can result in very painful injury. The borer should be kept sharp and clean and should always be held in such a manner that a slip cannot result in injury. Under no circumstances should the palm of the hand cover the opposite face of a stopper being bored. The stopper should be

held firmly with the thumb and forefinger and start the boring with the stopper braced against a soft wooden block or the equivalent. In boring rubber stoppers, wet the borer cutting edge with glycerine or water. Rotate the stopper occasionally during the boring to aid in making a perpendicular hole.

2. **Insertion of Tubing in Stopper.** Glass tubing should be inserted in a rubber stopper by using some form of lubricant, such as water or thin grease. Lubricants which might react with the contents of the flask should be avoided.

3. **Breaking a Tube.** When breaking a small-bore glass tube or rod it should first be scratched with a file at the point of the desired break; then, holding the glass in front of the body, with the scratch away from the operator and with the thumbs pressing firmly outward at the point opposite the file scratch, snap quickly with both hands as if snapping a twig. Sharp ends of broken tubing should be fire-polished before using or putting back into stock.

4. **Clamps.** When setting up glass apparatus it should be clamped just tightly enough to support the weight. All parts should be independently supported in line.

5. **Broken Glass.** Broken glass should be immediately picked up and discarded in the appropriate receptacle.

6. **Chipped or Cracked Glassware.** Glassware which has become chipped or cracked should not be continued in use.

1705. ELECTRICAL APPARATUS

1. **Standards.** Electrical equipment in the laboratory shall be installed, guarded, and operated in accordance with Chapter 15 and shall comply with the requirements of the National Electrical Code.

2. **Repairs.** All electrical wires and apparatus shall be treated as dangerous and must be worked on by qualified personnel only.

3. **Shock.** Precautions should be taken against working in a position in which a shock or slip might place the body of an employee in contact with exposed electrical, energized parts.

4. **Insulated Floor.** Any areas in and around high voltage equipment shall be provided with an insulated floor surface and shall be clearly marked with high voltage warning signs.

5. **Artificial Resuscitation.** Persons working with or around high voltages should familiarize themselves with artificial resuscitation methods. Where feasible, training in artificial resuscitation methods should be provided on an organized basis (see 1501.12).

6. **Interlock System.** Where guarding of high voltage equipment cannot be made effective, a suitable interlock system should be used. If the nature of the work is such that an interlock system cannot be used, then personal protective equipment such as rubber gloves, insulated tools, etc., shall be employed with a helper standing by to cut off the power.

7. **Burns.** High frequency circuits should not be touched, as the arcs may cause deep burns.

8. **Connections.** Connections shall not be made or broken while the circuit is energized. The power shall first be turned off.

9. **High Frequency Fields**

a. **Stay Clear.** Parts of the body shall not be placed in strong high frequency fields. They produce heat at a high rate. The eyes are particularly vulnerable to injury from this type of radiation.

b. **Jewelry.** Rings, watches, bracelets, and other metal objects should not be worn close to high frequency fields as they may become hot in a short period of time.

c. **No Thoroughfare.** Areas in or around high voltage equipment shall not be used for thoroughfares, storage space, or working space.

10. **Cathode Ray Tubes.** Cathode ray tubes must be kept in the original cartons until installed in a piece of equipment (see 1546). Tube mounting operations should be

isolated to protect other employees and the operators should wear face shields, leather aprons, and gloves.

11. **Electron Beams.** High powered concentrated electron beams, which prevail in newly developed equipment for heating, welding, and/or melting, are injurious to the eyes and such beams must not be viewed without protective eye shielding of the proper optical density.

1706. FIRE AND EXPLOSION

1. **Vapors.** Flammable vapors should be as widely separated as possible from sources of ignition and should not be released into ambient laboratory atmosphere, but only in an adequately vented hood.

2. **Extinguishers.** The laboratory should be adequately equipped with fire extinguishers of the type suitable to combat the kind of fire which might be expected to occur. (See 0205 for types of fires and extinguishers.) Laboratory employees should be thoroughly instructed in the use of this equipment.

3. **Fire Blankets.** Laboratories should be equipped with fire blankets and/or safety showers. Their location should be clearly marked and employees instructed in their use.

4. **Quantities of Flammable Liquids.** Only the amount of flammable or explosive material that is actually required for the

day's work shall be brought into the laboratory. A storage area separated from the immediate working area should be provided.

5. **Fume Hoods.** Experiments involving flammables should be preferably conducted in a fume hood. Work of a hazardous nature involving flammables or explosives should never be performed where any resultant fire might block egress.

6. **Exits.** Every laboratory room where hazardous work is performed should have at least two exits as widely separated as practicable.

7. **Gas Burners.** Gas burners should be lighted by flint lighters. Burners should not be left unattended. Rubber tubing for burners should be inspected routinely to assure tight connection and good condition.

8. **Liquefied Gases.** Combustible and toxic gases shall be vented into hoods or the equivalent. Oxidizing gases shall be kept separate from combustible gases.

1707. CHEMICAL STORAGE

1. **Adequate Space.** The storage room should have adequate aisles, a safe, substantial means of reaching high storage spaces, and adequate illumination for the reading of labels.

2. **Ventilation and Fire Prevention.** A door or window opening directly to the outside should be provided, as well as a blower capable of quickly changing the air in the room. If flammable solvents or explosives are stored, the blower as well as other electrical fixtures should be explosion proof. The room should be provided with a fire door and sprinkler system.

3. **Arrangement of Material.** Heavy items should be stored as close to the floor as possible. Material should not be allowed to project beyond the front of the shelving. Chemicals which will react violently with each other should be stored in spaces as widely separated as may be practical. Containers of corrosive chemicals should not be stored on high storage shelves.

4. **Temperature.** Excessive heat or cold should be guarded against where such a condition may cause leakage or a reaction. Do not permit sunlight to shine on volatile liquids or be focused or concentrated by passing through glass bottles placed near the window.

5. **Labels.** All chemicals shall be plainly labeled. Unless materials found in unlabeled bottles can be properly identified, they should be safely disposed of.

6. **Emergency Equipment.** Fire extinguishing equipment and self-contained breathing apparatus should be readily available at chemical storage areas.

7. **Chemicals Requiring Reaction Control.** Chemicals requiring inhibiting agents, liquefied gases in vessels having vent caps, or other materials requiring reaction control should be marked and be easily accessible for inspection.

8. **Storage of Flammables**

a. **In Refrigerators.** Flammable liquids and volatile solvents shall not be stored in a refrigerator unless the refrigerator is explosion proofed for Class I, Groups C or D, hazardous locations as defined by the National Electrical Code. Domestic type refrigerators listed by the Underwriters' Laboratories as meeting this requirement are available.

b. **In Glass Bottles.** A glass bottle shall not be used to store more than 1 liter of an individual flammable solvent in the laboratory. Flammable solvents required to be kept in the laboratory, ranging in size from 1 liter to 1 gallon maximum, should be stored in metal containers of an approved safety type. Highly volatile materials such as ether should not be stored in the laboratory.

c. **Metal Cabinets.** Flammable liquids used in small quantities in a laboratory should be stored in a metal cabinet. Metal cabinets containing flammable liquids should be clearly labeled on the outside and storage of combustible materials with flammable liquids should be prohibited.

1708. HANDLING CHEMICALS

1. General

a. Planning. Operations and movements should be planned before handling hazardous chemicals.

b. Mixing. When mixing acid and water, the acid must always be poured slowly into water, not water into acid. Employees should avoid inhaling acid fumes. Any pouring, mixing, or dispensing of acid shall be in a ventilated sink where running water is available.

c. Disposal. Corrosive, highly reactive, or volatile liquids shall not be poured down sink drain pipe. Separate receptacles shall be provided and clearly marked for broken glass, acids, and inert material. Disposal of chemicals, toxic materials and explosives shall be made under the guidance and cognizance of the Safety Officer who shall instruct personnel in the proper procedures for handling, packaging for disposal, storage and transportation. Chemicals of low or no toxicity or low flammability shall be disposed of under the supervision of a competent chemist and/or the Safety Officer (see Chemical Safety Data Sheets, Manufacturing Chemists Association).

d. Catch Pans. Catch pans of suitable design and sufficient capacity should be placed beneath stills during distillation, or when large glass flasks or beakers are heated to prevent possible injury to personnel in case of breakage.

e. Radioactive Materials. Laboratory workers handling radioactive materials shall be informed of the hazards involved. The rules are outlined in NAVMED P-5055 *Radiation Health Protection Manual.*

f. Oxidizing Agents. Strong oxidizing agents must be handled with great care to avoid mixture with easily oxidizable material such as sulphur. When dry, such mixtures may be explosive. Use of a hand pump is the preferred method of transferring chemicals from carboys.

g. Large Containers. Large containers such as carboys should be handled mechanically by tilters or cradles.

h. Protective Clothing. Personnel dispensing or handling chemicals should wear protective clothing (see article 1702).

i. Accidental Spills. Where accidental spills or contamination by toxic substances occur in the laboratory, procedures for clean-up and monitoring of the area is to be under the guidance of the Safety Officer.

j. Toxic Materials. Operations involving toxic materials composed of arsenic, barium, beryllium, cadmium, lead, selenium, tellurium, thallium, etc., or including materials of unknown toxicity should be set up and operated under the guidance of the Safety Officer.

k. Avoid Contamination. Stoppers, glassware or benches contaminated by acids or poisons should not be left where other personnel may touch them. To avoid contact with contaminated surfaces, rinse spillage on glassware or other exposed surfaces immediately.

l. Transporting Chemicals. Safety cans, carts, acid bottle carriers and other safety transport devices should be used to carry chemicals about the laboratory.

2. Specific Hazardous Chemicals.

Except for the following hazardous chemicals and materials used principally in the laboratory, hazardous substances including chemical compounds are covered in Chapter 20.

a. Mercury. Although acute mercury poisoning may result from ingestion of mercury and its salts, the principal hazard in the laboratory comes from its cumulative effects on the system acquired by continuous inhalation of even low concentrations of its vapors and by contact with contaminated equipment and materials. Good housekeeping is, therefore, of prime importance in eliminating the possibility of mercury poisoning.

(1) Containers. Mercury should be kept in sturdy, tightly closed, and clearly labeled containers.

(2) Heating. Mercury should never be heated in uncovered containers unless the immediate area is well ventilated. Mercury baths used for melting point determinations should be kept under a well-drawing hood and the operator must be careful not to inhale the fumes.

(3) Filling apparatus. When apparatus is to be filled with mercury, access to the working area shall be restricted. A catch pan containing water about one-half inch deep shall be placed under the filling opening. Every precaution to avoid spilling, such as the use of funnels and rubber tubing, shall be taken.

(4) Decontamination. Mercury spills shall be cleaned up promptly employing the following precautions:

(a) Provide powerful exhaust ventilation.

(b) Gather up as much as possible by careful sweeping or sponging.

(c) Suck up any mercury caught in crevices using a vacuum line or aspirator fitted with a water trap or a vacuum cleaner specifically designed for mercury recovery.

(d) Wash down affected area with a lime-sulphur solution being careful to avoid contacting bare metal surfaces unnecessarily. This treatment will convert any residual traces of mercury to inactive mercuric sulphide which may be swept up.

(e) If a large amount of mercury is spilled (100 cc. or more) and extensive clean-up procedures are required, wear protective clothing and respirators.

(f) Clean-up personnel should finally inspect their clothing for entrapped mercury and then wash thoroughly with soap and water.

(g) Report all spills and accidental contaminations to the Safety Officer who will monitor the clean-up.

b. Perchloric Acid. Perchloric acid presents a formidable fire and explosion hazard, especially when concentrated beyond 76%. Laboratory employees using perchloric acid should familiarize themselves with Chemical Safety Data Sheet No. SD-11, "Perchloric Acid Solution," Manufacturing Chemists' Association. Surfaces and equipment, such as benches, hoods, and exhaust fans, where the solution is frequently used, should be washed periodically to eliminate the accumulation of dry perchloric acid which is readily exploded by impact incident to repairs or by reaction with organic materials.

c. Metallic Sodium and Potassium

(1) Storage. Metallic sodium and potassium should be stored under kerosene or mineral base oil in tin cans. The cans should be inspected periodically and replaced if evidence of leaks or rusting is found.

(2) Disposal. Scrap bits of metallic sodium and potassium should never be discarded in the sink nor thrown into waste cans. Reaction with moisture will cause a fire and violent splattering will result. These metals should be added carefully, in small pieces, to cold alcohol, waiting until all gas evolution has stopped and the solution is complete after each addition. This alcoholate may then be discarded safely in the sink if followed by a generous flow of water.

(3) Fire extinguishers. Fire extinguishers approved for Class D (combustible metal) fires and containing sufficient agent for the amount of metal involved shall be available where extensive use is made of metallic sodium and potassium.

Chapter 18
PHOTOGRAPHY

1801. APPLICABLE PRECAUTIONS

This chapter highlights basic safety precautions and instructions which must be observed and followed meticulously when handling photographic supplies and equipment at shore installations. Photographic personnel are required to know and shall follow the detailed safety precautions contained in NAVWEPS 10-1-764: *Safety Precautions for Photographic Personnel.*

1802. THE PHOTOGRAPHIC LABORATORY

The following safety precautions must be followed by personnel working in Navy photographic laboratory areas:

1. **Darkrooms.** Enter and leave dark spaces cautiously, to ward against the possibility of collision with anyone carrying glassware or chemical solutions.

2. **Paper Cutters.** Operate a paper or print trimmer with extreme care and always leave the blade down after each use. Stencil or otherwise mark the face of all trimmers with the following warning: LEAVE BLADE DOWN.

3. **Housekeeping.** Maintain scrupulous housekeeping practices in all areas where chemicals are handled.

4. **Hygiene.** Wash hands thoroughly with an acid-type hand cleaner and rinse thoroughly with water immediately after handling poisonous chemicals; within minutes after possible exposure to dust or fumes; and also several times a day when handling or using poisonous chemicals even though no contact has occurred.

5. **Personal Protective Equipment.** Use approved personal protective clothing or devices whenever applicable. Wash gloves thoroughly and promptly with acid-type hand cleaners and rinse well with water. Clean dust respirators thoroughly and frequently. Scrub rubber face pieces frequently with acid-type hand cleaners and rinse well with water. Launder work clothing frequently.

6. **Ventilation.** Provide adequate ventilation for processing rooms (20 changes per hour.)

7. **Chemical Hazards.** Before handling or using photographic chemicals, become familiar with the detailed precautions for their safe handling as outlined in article 1806.

8. **Smoking.** Do not smoke around film in storage, especially around 35 mm footage, or in areas where volatile solvents are stored or used.

1803. FILM

Safety film (acetate base) is very slow burning, is not easily combustible, and requires no special handling or storage as hazardous material. Nitrate film, however, is highly flammable and under certain conditions explosive. All nitrate film which is serving no present purpose should be destroyed. If it is anticipated that footage or negatives on this type of film will be used in the future, it should be duplicated onto safety film and the nitrate film destroyed. Where it is considered necessary to keep nitrate film for record purposes, it shall be handled and stored in accordance with the precautions of NAVWEPS 10-1-764.

1804. ELECTRICAL EQUIPMENT

1. **General.** A great amount of photographic equipment is electrically operated. When working with or around such equipment the applicable precautions of Chapter 15 shall be followed.

2. **Inspection.** All electrical connections and wiring shall be regularly inspected for

damage, frayed or broken insulation, and for possible short circuits.

3. **Turn Off.** All electrically operated equipment shall be turned off after use.

4. **Heating Equipment.** Some equipment, such as dry mounting presses, remains hot for some time after use. As soon as the heating elements in a press have been turned on, a plainly visible sign marked "Danger – Hot" shall be placed on the equipment and left there until after the machine has been turned off and has had a chance to cool.

5. **Wet Conditions.** Plugs, switches, or any parts of electrically operated machinery shall not be touched with wet hands or while standing in water or on a wet deck. The current shall be disconnected before attempting to salvage any electrical equipment that has become wet or has possibly come in contact with water while in use.

1805. FLASH EQUIPMENT

Harm to photographic personnel from photoflash equipment generally comes from the shattering of the glass bulb when a lamp is flashed or from a burn through personal contact with a hot bulb. When shipping, storing, handling, or using photoflash equipment personnel shall be guided by the applicable instructions and by the following precautionary measures.

1. **Shipment and Handling.**

a. **Case Shipments.** Whenever possible, flash lamp shipments shall be made in unbroken case lots. If it is not possible to make full case shipments, broken cases shall be repackaged in corrugated cardboard containers in a manner similar to that used by the manufacturers and carefully and thoroughly resealed.

b. **Labeling.** Before shipments are made shipping activities shall use red paint to stencil this warning on four sides of all packages containing photoflash lamps: *Caution – Do not transport this case of flash lamps if seal or case is broken.*

c. **Broken Case Lots.** Broken case lots of flash lamps carried in aircraft for the purpose of photography in flight shall be kept in spaces where they are visible at all times so that any fire that may result from lamp flashing can be seen and controlled immediately.

2. **Dangerous Areas.**

a. **Explosive Atmospheres.** The use of any type of flash equipment in an explosive atmosphere is extremely dangerous and must be avoided at all times. A lamp shall never be flashed unless the operator is certain that there is no danger from explosive elements (fumes, vapors, dust, etc.) in the atmosphere.

b. **Safety Permit.** If photographic reporting of accidents, disasters, etc., requires that flash equipment be used in locations where dangerous atmospheres may be present, written permission to use this equipment in such areas must be obtained from the officer or supervisor having cognizance over the area or location to be photographed.

3. **Photoflash Bulbs.**

a. **Handling.** Before bulbs are used they should be inspected for damage or deterioration of the plastic safety coating. Each bulb should be kept in its carton until ready to place it in the flash gun socket. Bulbs should not be carried loose in pockets or containers where objects can scratch or injure the outside coating.

b. **Contact Points.** The base of the flashbulb must never be moistened with the tip of the tongue. The acid used in the flux for the solder is very injurious to the tongue tissues and may cause infection. If the contact points are not clean and bright they should be slightly rubbed with emery cloth or fine sandpaper to insure proper electrical contact.

c. **Electrical Power.** Flashbulbs shall not be hooked up to any available power source unless instructions on the lamp carton authorize their use on 3 to 125 volts per couple.

d. **Shielding Bulbs.** When taking flash close-ups a lamp reflector shield shall always be used. If no shield is available the use of a clean white handkerchief over the flash gun reflector will provide emergency protection to

the individual being photographed. Flash close-ups shall never be taken at distances closer than five feet.

e. **Radar.** Personnel handling flashbulbs in the vicinity of radar equipment should keep flashbulbs in their cartons until just before using the bulbs. (See Chapter 15)

4. **Electronic Flash Equipment.** Electronic flash equipment is designed to work at a high potential, in most cases at least 2,000 volts, and even after discharge the condensers carry a heavy charge of electricity which must be depleted or bled off before any repair work can be attempted. There is the additional danger of sparking of the contact points in the power packs. The following precautions are to be followed explicitly when servicing and operating this equipment:

a. **Qualified Personnel.** Only qualified personnel shall service high voltage electronic flash equipment.

b. **Lamp Installation.** A unit shall not be charged for firing unless the flash lamp is installed and the complete assembly is ready for use.

c. **Lamp Removal.** If the assembly is not fired after it has been charged, the flash lamp shall not be removed for at least one hour.

d. **Hazardous Atmospheres.** This equipment shall never be operated where there is any possibility of the presence of explosive vapors, dusts or fumes.

e. **Power Cord.** The power cord from the power pack shall be disconnected before removing the lamp or touching the metal part of the lamp socket. Only manufacturer approved extension power cords shall be used to connect electronic flash heads to power packs.

f. **Batteries.** Before removing the batteries, the assembly shall be discharged and the charging switch changed from the charge position.

5. **Photoflash Bombs.** Photoflash bombs are loaded with a pyrotechnic material having a charge of high explosives, and when ignited they explode with extreme violence and intense heat.

a. **Handling.** Extreme care shall be exercised in handling these bombs because of their great sensitivity. No hammering or cutting should be done on the cases, and absolutely no work should be done on the bomb except by qualified ordnance personnel.

b. **Eye Protection.** Because of the brilliance of the flash (500 million candle power), personnel should be warned not to watch the explosion.

1806. CHEMICAL HAZARDS

1. **Familiarity With Precautions.** Prior to handling or working with photographic chemicals, personnel shall become thoroughly familiar with the detailed precautions for the chemicals involved. The applicable precautions of Chapters 17 and 20 pertaining to the handling of chemicals shall also be followed. A list of dangerous photographic chemicals and their antidotes is given in NAVWEPS 10-1-764. Other chemicals, however, may also be hazardous. General rules for emergency treatment given below shall be supplemented by the medical officer.

2. **Labels.** All chemical containers shall be legibly and completely labeled and special care shall be taken to be certain that poisons are so labeled.

3. **Storage.** All chemicals shall be stored in cool, dry, dark places. Separate storage areas shall be maintained for chemicals which react violently with each other to diminish the danger of fire or explosion. Shelves should have an edging strip to prevent chemical containers and equipment from extending over the edges or from being shoved off the shelves. Corrosive chemicals shall be kept in thick-walled glass containers protected by wooden frames or boxes. Containers having capacities of five gallons or more should be supported by a sturdy wooden or metal cradle pivoted or hinged for ease in pouring.

4. **Mixing Chemicals.** The following precautions shall be followed in mixing chemicals:

a. **Acid to Water.** Always add acid to water; never add water to acid. The acid

should be added slowly and with constant mixing.

b. Acid and Cyanide. Never mix an acid and a cyanide, as a lethal gas will be released.

c. Dissolving Alkalies. When dissolving strong alkalies such as sodium hydroxide or potassium hydroxide, use cool water.

d. Pyrex Containers. Use Pyrex glass containers when working with acids. Thick walled glass containers should never be used in mixing chemicals as such glass is more subject to breakage due to temperature changes.

Chapter 19

COMMISSARY, MESSING, AND EXCHANGE FACILITIES

COMMISSARY AND MESSING

1901. GENERAL

1. **Responsibility of Personnel.** It is the responsibility of all personnel to know how to perform assigned duties in a safe manner. The correct way to do a job is the safe way. A person who is not certain as to his particular assignment, or the correct way to do it, should immediately ask his superior to inform him. He should become thoroughly familiar with the safety precautions applicable to his duties and should apply these precautions at all times if it is possible to do so.

2. **Unsafe Conditions.** Unsafe conditions, including damaged and defective equipment, are to be reported to the supervisor without delay. Repairs or replacements should be made as soon as possible.

3. **Clothing Hazards.** Certain kinds of clothing may be accident hazards. Thin or broken soles, high heels, and scarfs, for example, have caused serious, and even fatal accidents. Personnel should make sure that clothing is safe for a particular task. Open toe shoes and sandals are prohibited, and jewelry must be removed when a person is working near electricity and machinery or when he is handling heavy objects.

4. **Foot Protection.** Safety shoes or toe guards shall be worn by personnel engaged in handling heavy items such as case goods, beef sides, pork sides, etc.

5. **Lifting.** When carrying out lifting operations, these rules should be observed:

a. Keep back straight, bend knees, and let leg muscles do the work.

b. Ask for assistance when handling heavy or bulky objects.

c. Never attempt to lift anything when you are in an awkward position.

6. **Climbing.** Only a ladder set at a secure angle shall be used for climbing. Ladders are to be equipped with safety feet. Makeshifts shall never be used in place of ladders.

7. **Over-Reaching.** Stretching in order to reach objects may result in strains or falls. Therefore, over-reaching is to be avoided.

8. **Running.** Running, except in emergencies, is prohibited.

9. **Horseplay.** Personnel shall not indulge in horseplay or practical jokes. This kind of behavior often leads to injuries.

10. **First Aid.** Employees shall always arrange for first aid treatment to an injury, no matter how slight the injury may be. A scratch, if neglected or improperly attended, can lead to serious consequences.

11. **Safety and Operating Instructions.** Safety and operating instructions shall be posted adjacent to all equipment and shall be readily visible to the operator.

1902. NAVY EXCHANGE

1. **Stock Arrangement.** Merchandise should be displayed on counters and shelves in such a manner as to achieve the maximum safety for personnel and customers.

a. **Stacking.** Merchandise should be stacked so that there is no danger of its falling. The heaviest items should be placed on the bottom of the stack and the upper items overlapped pyramid fashion. Merchandise is not to protrude beyond the edge of counters or shelves.

b. **Reach-Arms.** Reach-arms are to be provided so that merchandise on the higher shelves is easily accessible.

c. **Cleaning Compounds.** Store cleaning compounds and other caustic solutions in cool, dry areas on lower shelves only.

2. **Waste Disposal.** Empty boxes and cartons, excelsior, and other waste material is not to be accumulated behind counters, in the aisles, or elsewhere in the store. Waste should be disposed of promptly.

3. **Equipment Handling.** The following precautions shall be observed in the handling and maintenance of equipment:

a. Do not block the aisles with stools, display racks, stock baskets, stock trucks, or other equipment.

b. Keep shopping carts in good mechanical condition. Do not permit children to ride in shopping carts unless the carts are designed for this purpose.

c. Load stock trucks so that the merchandise will not topple. Push the trucks slowly and return empty trucks to the stockroom immediately.

d. When pin tickets are used for price marking do not leave the pin points exposed. Insert them into the tickets. Do not leave loose pin tickets on the counters.

e. Keep drawers and doors closed when they are not in use.

f. Arrange for repairs to be made as soon as possible on rough edges and splintered areas on equipment.

1903. STOCK ROOM

1. **Storing Merchandise.** When storing merchandise, the employee should observe the following safety rules:

a. Use shelving of sturdy construction.

b. Wherever possible arrange merchandise so that it is available without moving other merchandise. Always arrange merchandise so that articles likely to be needed first will be easily accessible.

c. Place the heaviest material on the bottom of stacks and overlap the upper material pyramid fashion.

d. Do not stack merchandise so high that it may fall. In the storeroom afloat, merchandise should be secured behind battens or lashed down if there is danger of its toppling.

e. Do not place merchandise on shelves, in bins, or elsewhere, in such a manner that it protrudes into the aisles.

f. Place flammable materials in lockers or in approved safety cans provided for them. Store the containers on lower shelves only.

2. **Ventilation.** The stockroom should be properly ventilated if possible. When an employee enters a closed stockroom which has not been properly ventilated, he should arrange for another person to stand outside in case of emergency. The door should remain open. Aboard ship a damage controlman should enter an improperly ventilated storeroom before other personnel are allowed to enter.

3. **Securing a Stockroom.** It must be determined that everyone is out of a stockroom before it is secured.

4. **Repairs.** Rough areas, splintered edges, and other such hazardous conditions should be repaired as soon as possible.

5. **Smoking.** Smoking in stockrooms is prohibited.

1904. RECEIVING ROOM

1. **Equipment.** The following rules apply to the type and use of equipment in a receiving room:

a. **Trucks.**

(1) Use hand-trucks or flat-truck for moving heavy cases.

(2) Do not attempt to load merchandise on two-wheel hand-trucks without assistance.

(3) Do not overload hand-trucks.

(4) Never push hand-trucks rapidly or carelessly.

(5) Park empty trucks in an area designated for this purpose. Two-wheel hand-trucks should be parked in an upright position.

b. **Gloves.** Gloves are to be worn when an employee is handling wooden crates or performing other duties in which there is danger of injury to his hands.

c. **Goggles.** Safety goggles must be worn when cases are being opened for pro-

tection against flying splinters and flying ends of bailing wire or metal strapping.

d. **Tools.** Cartons and cases are to be opened with appropriate tools.

(1) Cartons which are not to be used again should be opened with a safety carton opener.

(2) Cartons which are to be used again should be opened with a spatula-shaped instrument.

(3) Cases should be opened with any of the following tools necessary: pinch bars, nail pullers, wire cutters, and steel strapping cutters. Hammers, lather's hatchet, axe, etc., should not be used for opening wood boxes or crates.

2. **Unpacking Merchandise.** Merchandise shall be unpacked in accordance with the following regulations:

a. Wear gloves when unpacking merchandise.

b. Unpack merchandise as soon as possible after its receipt.

c. Remove protruding nails, staples, and wire from boxes and barrels before unpacking their contents.

d. Beware of broken glass when reaching into packing cases in which glass items have been shipped.

e. Do not pick up broken glass with bare hands.

f. Stack unpacked merchandise in a safe location and in safe piles to prevent its toppling or being trampled.

g. Properly dispose of packing material immediately. Nails, pieces of wire, metal stripping, and other such packing materials may cause injury if dropped on the floor.

h. Stow empty packing cases in a safe manner in an area designated for this purpose.

1905. COMMISSARY

Precautions set forth in the articles on the store, storeroom, and receiving room shall be observed in the commissary when applicable. In addition, other safety precautions are to be followed.

1. **Coffee Grinder**

a. Place the coffee grinder where it will not be accessible to children.

b. Disconnect the grinder before cleaning it.

2. **Dairy Department.** Check bottled goods for chips and cracks. Do not sell damaged merchandise.

1906. BUTCHER SHOP

1. **General.** The following general precautions are to be observed in the butcher shop.

a. **Crowding And Jostling.** Personnel must be careful not to crowd or jostle one another. Crowding and jostling are particularly dangerous in the presence of the cutting instruments and sharp pointed hooks which are found in a butcher shop.

b. **Meat Trimmings.** In addition to observing general housekeeping precautions, personnel in the butcher shop should be especially careful not to let meat trimmings lie about on the floor. They not only attract flies and insects but create extremely dangerous slipping hazards.

2. **Cutting and Slicing Operations.** Butchers must pay particularly close attention to their work when using cutters or slicing equipment. The slightest miscalculation or a minor slip can lead to a serious injury.

3. **Hand-Operated Tools.** The following precautions with reference to hand-operated tools are to be observed:

a. Maintain a complete set of tools at each block so as to avoid unnecessary injuries which may be suffered from carrying the tools about.

b. Keep the handles of tools clean and dry. Greasy or wet handles may cause accidents.

c. Grip instruments firmly.

d. Be sure your fingers are below the guard when using a sharpening steel.

e. Use only sharp knives. Dull knives are greater accident hazards than sharp knives during cutting operations.

f. Never hold a knife in your hand when carrying any other object.

g. Be careful not to lay a piece of meat on a knife. The meat may conceal the cutting edge.

h. Do not place knives in the wash water until ready to wash them. Lay them in plain view beside the sink.

i. When using a cleaver, keep your free hand as far from the path of the cleaver as is necessary to assure safety.

j. Use a hand meat hook when lifting or boning meat.

k. Use a scoop to handle shrimp.

l. Keep the surfaces of meat blocks level.

m. Store tools in their proper places.

4. **Electrically Operated Equipment.** Precautions pertaining to electrically operated equipment are set forth in Chapter 15. In addition to those, the following specific precautions, to be observed when using electrically powered machines shall be permanently posted adjacent to the machine.

a. **Power Meat Saw**

(1) Adjust the blade before the machine is started.

(2) Do not twist the blade while operating the machine.

(3) Never leave the machine running when it is not in use. Turn it off immediately upon completion of the cutting operation.

(4) Disconnect the machine before cleaning it.

b. **Electric Meat Grinder**

(1) Adjust the cutter before the power is turned on.

(2) Never feed the machine entirely by hand; use a pusher-stick.

(3) Do not attempt to remove anything from the machine while the machine is running.

(4) Disconnect the machine before cleaning it.

c. **Cube Steak Machine**

(1) Do not permit your hand to get too near the food slot when feeding meat into the machine.

(2) Disconnect the machine before cleaning it.

d. **Slicing Machine**

(1) Adjust the blade for size of cut before turning on the power.

(2) Make sure all guards are secured before operating the machine. Never use the slicer when the blade guard is off.

(3) Do not operate the machine with wet hands.

(4) Keep your hands away from the blade when the machine is running.

(5) Never put your hands under the guard on the slicer.

(6) Disconnect the machine before cleaning it.

(7) Use a cloth on a stick to clean the blade. Wipe from the center of the blade toward the cutting edge.

5. **Other Equipment**

a. **"Walk-In" Boxes**

(1) Do not enter freezing rooms without proper clothing.

(2) The signal light which signifies whether anyone is in the box shall be checked daily to determine that it is in working order.

(3) Report immediately any evidence of escaping refrigerator gas.

(4) Do not carry objects which are large enough to obscure your view.

(5) Be careful not to snag yourself on meat hooks.

(6) Keep the floor dry and clean. Remove blood drippings promptly.

(7) *Learn the location and operation of escape hardware on refrigerator doors.*

b. **Display Cases**

(1) Maintain proper temperature in refrigerated display cases.

(2) Report immediately leaks or loose connections.

(3) Be sure that electrical refrigeration compressors are grounded.

1907. GALLEY

1. **General**

a. **Marking of Doors.** Mark double swinging doors "IN" and "OUT". Use the correct door and pass through slowly.

b. Handling of Hot Foods And Liquids

(1) Do not allow the handles of cooking utensils to extend beyond the edge of the range. They can be bumped and serious burns to personnel result from spilled food or liquid.

(2) Before removing foods from hot ranges and ovens be sure there is a clear place on which to set them.

(3) Use only the proper implements, such as pot holders and tongs, for handling hot foods.

(4) Carry hot liquids in covered containers with the covers securely in place.

(5) Do not bump into anyone when hot food is being carried.

(6) Immediately mop up grease which is spilled on the floor. Greasy floors are doubly hazardous. They can cause fires as well as falls.

c. Proper Use And Care Of Utensils

(1) Use only the proper implements for opening cans and other containers. Meat cleavers shall never be used to open cans or cases.

(2) Hold knives firmly. This cannot be done if the handles are wet or greasy.

(3) Knives are to be kept in a drawer designated for this purpose only. The handles should be kept to the front and the cutting edges should face in one direction.

(4) Keep utensils and other implements in their proper places when they are not in use.

2. Equipment

a. Operation. Inexperienced personnel shall not be permitted to operate galley equipment until thoroughly indoctrinated.

b. Power Source. Power for all equipment shall be disconnected at the distribution panel and the panel locked whenever galley is secured.

c. Ranges and Ovens

(1) Be sure that jets on gas ranges and ovens are fully lit when in use and are turned off when not in use.

(2) Open the dampers on oil-fired or gas-fired ranges when these ranges are not in use. Be sure dampers are opened before lighting off.

(3) Ranges and ovens should be equipped with automatic controls and door interlocks whenever feasible. All stacks shall be equipped with an automatic fire extinguishing system.

(4) Do not allow grease to collect anywhere on ranges or ovens. Greasy ranges and ovens are serious fire hazards. Dirty ranges and ovens can partly be avoided by using utensils of proper size, by regulating the flame to prevent boiling over, and by careful handling of utensils to prevent spilling.

(5) In case of fire in a range or oven immediately call the Fire Department. Then use available portable carbon dioxide (CO_2) or dry chemical extinguishers on the blaze.

(6) Do not attempt to clean ranges and ovens while they are hot.

(7) Never clean electrically operated ranges and ovens with water – severe shock may be suffered.

(8) Lights over ranges, ovens, and cooking urns shall be enclosed in vaporproof globes and guards.

d. Vegetable Chopper

(1) Make certain that the bowl is seated properly and that the chopping blade and guard are secure before starting the machine.

(2) Do not attempt to remove produce which has lodged between the blade and the housing until the machine is turned off and the blade has stopped revolving.

(3) Vegetable choppers shall be equipped with an interlock which disengages the electric current when guard is removed.

e. Potato Peeler

(1) Never operate the peeler unless water has been properly applied.

(2) Do not put your hand in the machine while it is running.

(3) Do not adjust the peeler unless the power has been shut off.

f. Food Cutter

(1) Be sure that the knives are in proper position and the guard is securely in place before starting the machine.

(2) Do not put your hands in the bowl while the knives are revolving.

g. **Food Chopper**

(1) Feed the food chopper with a wooden push stick; never feed it with your hands.

(2) Keep the same knife and plate together, as they wear to fit each other. Improperly fitted knives can break and fly off the machine.

h. **Food Mixing Bowl**

(1) Properly attach the mixing bowl before starting the machine.

(2) Keep your hands away from the mixing chamber while the machine is in operation.

i. **Dough Mixer**

(1) Be sure the mixing tub and the wire whip are seated properly before starting the machine.

(2) Do not put your hands in the mixing tub while the machine is in operation.

j. **Steam-Jacketed Kettle**

(1) Determine that the safety valve is in proper working order before using the kettle.

(2) Do not tamper with the safety valve or tie it closed. It is there to prevent the kettle from exploding. Safety valves shall be tested periodically to make sure that it is working at the set pressure.

k. **Pressure Cooker**

(1) Be sure that the safety devices are in proper working order before using the cooker.

(2) See that the cover is securely in place before turning on the heat.

l. **Deep Fat Fryer**

(1) The temperatures of the fat shall be thermostatically controlled, and under no conditions shall the fat be heated over 400°F.

(2) Heating elements, thermostats, electrical connectors, and switches shall be cleaned and adjusted monthly, or more frequently if needed, by a qualified electrician.

(3) The electrical insulation shall be tested monthly for insulation resistance.

(4) Before using a fry kettle, be sure the drain is closed tightly. Fill kettle only to the level recommended by the manufacturer.

(5) Keep the equipment, especially the electrical fixtures, clean at all times.

(6) Kettles should be kept covered when not in use.

(7) A baffle or shield shall be set up between fry kettle and any adjacent range or grill.

m. **Grill**

(1) Do not allow grease to accumulate on the cooking area of the grill.

(2) Use only the tools provided for turning food and removing it from the grill.

(3) Maintain proper exhaust ventilation. The proper ventilation cannot be maintained if grease is permitted to collect in the exhaust. Clean the exhaust semimonthly or oftener.

(4) Do not permit excessive grease to accumulate in the grease disposal trough.

(5) Be sure that burners are fully lit when in use and are turned off when not in use.

3. **Food Preparation.** Precautions relating to food preparation are set forth in NAVMED P-5010.

1908. MESS

1. **Use and Care of Equipment**

a. **Steam Table**

(1) Use the proper implements, such as pot holders and tongs, for handling the containers.

(2) Tilt containers away from you when inserting them into the wells.

(3) Cover unused openings to prevent scalding.

b. **Coffee Urn**

(1) Keep hot water to the safe level indicated by the gauge on the urn.

(2) Be sure that the safety valve is in proper working condition. Safety valves should be tested periodically to determine they are working at the set pressure.

(3) All automatic coffee makers shall be equipped with thermostatic controls.

c. **Fountain.** Use duck-boards between the fountain and the back bar area if it is possible to do so.

d. Ice Cream Freezer Unit With Cabinet

(1) Never run hot water into any cold freezer.

(2) Lock the switch in the "off" position before cleaning the mixing drum.

e. Vending Machines

(1) Electric vending machines must be grounded.

(2) Keep vending machines clean.

(3) Report defective machines promptly.

(4) Dispose of broken bottles immediately. Empty bottles should be placed in nearby cases provided for that purpose.

(5) Use a hand-truck or other wheeled vehicle to lessen exertion and strain when transporting cases of bottles.

(6) Stack cases in such a manner as to avoid toppling and tripping hazards.

(7) The areas around vending machines should be policed frequently to make certain these precautions are being observed.

1909. SCULLERY

1. Dishes

a. Do not stack glassware and dishes so high that there is danger of their toppling.

b. Never pick up broken glassware and dishes with bare hands.

c. Immediately place broken pieces in containers provided for that purpose.

d. Do not load silverware baskets too heavily for safe handling.

e. Do not expose hands to dishwashing solution. Rubber gloves should be worn when strong alkaline dishwashing compounds are used.

2. Equipment

a. Pre-Rinsing Machine

(1) Keep hands outside the hopper while the machine is in operation.

(2) Watch for sharp edges which may occur on the strainer, and make the necessary repairs.

b. Dishwashing Machine

(1) Be sure vent supply is in proper working condition.

(2) See that thermostatic controls are functioning properly.

(3) Heavy ship motion may cause scalding rinse water to surge from machine. During rough weather, exercise particular care in operation of machine. If necessary, secure and drain machine.

(4) Never allow the minimum temperature of the rinse water to fall below 180°F.

(5) Keep the side door closed while the machine is operating.

(6) Do not place your hands in the machine while the steam is on.

(7) Exercise care in feeding the machine to prevent hands from getting caught in the conveyor.

1910. DUMB-WAITERS

1. The equipment shall be tested at least annually.

2. All safety control devices shall be so located as to prevent tampering and manipulation while any dumb-waiter door is open.

3. Operating instructions shall be posted at control stations. Instructions shall include all necessary safety precautions and load limitations of equipment.

4. Dumb-waiters shall be taken out of service whenever safety devices are inoperative and are not to be put into service until repairs have been made.

5. There shall be suitable means of communication between all operating stations.

EXCHANGE FACILITIES

1915. COBBLER SHOP

1. General Care

a. Keep floors and passageways free of supplies and scraps at all times.

b. Store tools in their proper places when they are not in use.

c. Use caution when handling rubber cement. It is highly flammable. Only the minimum amount required should be kept in the shop. Containers are to be kept covered.

d. Suitable seats shall be provided for employees who are engaged in work that

can be performed while seated.

e. All containers used to dispense flammable or toxic materials shall be labeled in accordance with Chapter 20.

2. Machinery

a. **Rules Applicable To All Machinery**

(1) Inspect machinery each morning before beginning operations to determine whether it is in satisfactory working condition.

(2) Permit only assigned maintenance personnel to repair machinery.

(3) Never operate equipment at a speed in excess of that prescribed by the manufacturer.

(4) Revolving shafts and couplings, pulleys, belts, gears, sprockets, chains, and friction drives should be encased or protected by guards.

b. **Stitcher**

(1) When starting the stitcher, push the wheel with the open palm. Never grasp the wheel.

(2) Stand to the right of the shoe guide.

(3) Face must be kept at a safe distance from the work table and away from the presser-foot lever.

(4) Fingers must be kept clear of the gears, presser-foot, and flywheel while the machine is in operation.

(5) When sewing, do not grasp the vamp in order to pull the upper away from the welt, as the awl may pierce the fingers. If it is necessary to pull the upper away from the welt, stop the machine. Before starting the machine again, be sure fingers are not too close to the welt.

(6) When threading the machine, or when making adjustments and repairs, shut off the motor and turn the wheel by hand.

c. **Finishing Machine**

(1) Be sure cutters are tightly secured before the machine is started.

(2) Make certain the exhaust is turned on before trimming operations are begun.

(3) Do not hold fingers too close to the part which is being trimmed or sanded.

(4) Wear protective goggles for trimming and sanding operations.

(5) Hold the shoe firmly during trimming and sanding operations.

(6) Shut off the motor before changing wheels, sandpaper, and emery cloths. Before the power is turned on again, be sure the wheels are locked in place.

(7) Clean dust collectors daily. The suction of collectors should be strong enough to eliminate flying dust particles which might get into the eyes.

(8) Sleeves should be rolled up to the elbow so that they will not be caught in the machinery.

d. **Rough Rounder**

(1) Check safety guards on cutting knives before using the machine to see that they are secured in the proper position.

(2) Never make adjustments or repairs when the switch is in the "on" position.

e. **Sanders**

(1) Keep hoods down on sanders and heel resting canes at all times.

(2) Be sure that sanding wheels are securely locked after replacing sandpaper.

1916. TAILOR SHOP

1. **General Care**

a. Store flammable solvents in approved safety vessels. Not more than one gallon of solvent shall be open at one time.

b. Keep areas used for the storage of tailoring work in sanitary condition.

2. **Machines**

a. **Pressing Machine**

(1) Do not allow anyone to stand near enough to the press to receive steam burns.

(2) Do not place hands on the buck while the steam is being applied or while the head is being lowered.

(3) Avoid the application of too much steam. Pressure should be kept to 60-65 pounds when the machine is in operation.

(4) Never bring the head down on the buck while trying to smooth out garments.

(5) Release the head when the press is not in use.

(6) Be sure that no one is standing at either end of the press when the head is to be released.

(7) Know the location of the main steam valves. In an emergency, these valves are to be closed.

b. Puff Iron

(1) Hands must be kept off the puff iron while the steam is being applied.

(2) Hold clothing being ironed in such a manner that hands will be at least 6 inches from the iron.

c. Sewing Machine

(1) Safety-type sewing tables with no exposed shafting and pulleys are recommended. Where it is impossible to enclose shafting, belting, and pulleys, skirt boards fastened under the table will usually protect operator's feet and legs from striking moving parts. All main drive belts, gears, and pulleys should be well guarded.

(2) The sewing machine should be equipped with a permanent guard so that the operator's fingers cannot pass under the needle. The machine should not be used at any time unless the guard is in place.

(3) Never touch the shuttle-carrier or the flywheel while the machine is in operation.

d. Rotary And Vertical Cloth Cutters

(1) The revolving or reciprocating blades should be equipped with an adjustable guard in front of the cutting edge. This guard should always be set so that there is a minimum of the cutting edge exposed during normal operation.

(2) The power should always be disconnected when the machines are not in use.

1917. DRY CLEANING SHOP

For detailed information as to precautionary measures to be used in the dry cleaning shop study the National Fire Protection Association (NFPA) pamphlet No. 32, *Dry Cleaning Plants,* which is the standard and approved guide on this subject. This pamphlet is available from NFPA Headquarters, 60 Batterymarch St., Boston, Massachusetts, 02110. Observe also the following precautions:

1. Ventilation and Humidity

a. Inspection Of Ventilating System. Before any cleaning operations are performed inspect the ventilating system to determine that it is operating properly. A complete change of air should be provided once every 6 minutes.

b. Vapor Concentration. In a dry cleaning shop which uses synthetic solvent, adequate ventilation must be provided to prevent danger from the toxic and flammable nature of solvent vapors.

c. Insuring Proper Humidity. The psychrometer shall be read at least hourly to insure that the proper humidity (not less than 60%) is maintained.

2. Protection to Personnel

a. Cleaning solutions are not to be used for personal cleanliness.

b. Food must not be taken into rooms where cleaning machines or tumblers are located.

c. Sleeping in the dry cleaning shop is prohibited.

d. Sprinkling of clothes by mouth is prohibited.

e. A first aid kit shall be supplied to the dry cleaning shop. At least one person in the shop should know how to administer first aid.

3. General Inspection. Steam and other fire extinguishing systems, including valves and piping, should be inspected monthly. Steam lines should be tested annually.

4. Equipment

a. General Care

(1) Only approved equipment with explosion-proof motors and other fire-protection features shall be used. Fail-safe and interlocking safety devices should be installed on the equipment wherever possible.

(2) Grounding systems shall be inspected and tested once a month and necessary repairs made immediately.

(3) Gauge glasses and sight glasses are to be protected against mechanical injury. They should be inspected daily for damage. The breaking of these glasses permits flammable liquids to escape.

564-350 O - 74 - 20

(4) Gauge shut-off valves shall be maintained in full operative condition at all times.

(5) Washers, extractors, treating tanks, clarifiers, separators, and stills should be liquid-tight. When splashing or leaking of solvent from those machines is discovered, repairs should be made immediately.

(6) Washing machines, extractors, scrubbing tables, and scrubbing tubs that utilize flammable liquids shall have return pipe lines not less than 1½ inches in diameter, provided with a liquid seal trap, and arranged so that the flammable liquids can be returned by gravity to the underground tanks.

(7) Use automatic means for closing covers of washing machines and drying tumblers.

(8) Scouring or brushing tables should have liquid-tight tops with curbs at least one inch high on all sides.

(9) Lint and refuse are to be removed from traps and placed in approved waste cans. Waste materials should be removed from the premises at the close of business each day.

b. Electrical Equipment

(1) Light fixtures, wiring, motors, and all other electrical accessories shall comply with Class I, Group D, hazardous locations, as defined in the National Electrical Code.

(2) Safeguard electrical equipment. Static electricity is a special hazard because of the nature of the machines used in a dry cleaning shop. NFPA Pamphlet No. 77M, *Static Electricity*, shall be used as a guide for preventing accumulation of static electricity.

c. Washing Machine

(1) Before using the washing machine, check the interlocks to the cylinder to be sure that they are working properly. Be sure the cylinder is in a locked position during loading and unloading.

(2) Wherever feasible, the outer shell doors shall have automatic controls so that the doors will close in case of fire or other emergency.

(3) The outer shell doors should be splash-tight.

(4) Dry cleaning machines should be kept closed except when they are being loaded or unloaded.

d. Extractor. Before using the extractor, inspect the interlocking devices. These must be in proper working order to prevent the cover from being opened while the basket is in motion and to prevent the basket from turning while the top is open.

e. Conveyor

(1) The conveyor should be constructed in such a manner as to prevent flammable liquids from dripping on the floor when goods are being moved from washing machine to extractor.

(2) A portable conveyor should be equipped with wooden or fiber-rimmed wheels or wooden shoes to prevent mechanical or static sparks.

(3) Portable containers used as conveyors for the transportation of goods from the washing machines to the extractors should be kept free of flammable liquids.

f. Tumbler

(1) Interlocks should be inspected before tumblers are used to insure that the cylinders will remain locked when the machines are being loaded or unloaded.

(2) Goods are to be removed from the drying tumbler after the drying process is finished to prevent spontaneous ignition or combustion.

(3) A drying tumbler should be vented to the outer air to prevent the accumulation of explosive vapors.

g. Drying Cabinet

(1) Drying cabinets, except for those with wooden interiors which are already in use, should be constructed of noncombustible material. Existing cabinets with wooden interiors should be lined with insulating material not less than ¼ inch thick.

(2) Racks used in drying cabinets should be noncombustible.

(3) Cabinets should be ventilated to the outer air to prevent the accumulation of explosive vapors. Where heat is used for

drying, flammable vapors may be given off even with a high flash solvent.

5. **Cleaning Operation**

a. **Types of Cleaners.** The following information should be used as a basis for determining the safest cleaner to use under certain specified conditions. For further details see NFPA Pamphlet No. 32. (See 1917)

(1) Naphtha has a volatility similar to that of gasoline. Use instead Stoddard Solvents (especially refined petroleum products) or other solvents with a flash point over 100°F to reduce hazards of gasoline and naphtha.

(2) Use a solvent of the rating which is prescribed for the dry cleaning system being used.

b. **General Precautions**

(1) All clothes shall be thoroughly searched before cleaning and all foreign materials especially matches and metallic substances, removed.

(2) No drying operation before washing shall be permitted unless articles so dried are properly humidified before removal to washing machines.

(3) Check all liquids used. Even in plants using nonflammable solvents spotting operations are often done with flammable solvents. In case of doubt about any cleaning fluids, check the flash point.

(4) Volatile flammable liquids, except those contained in a still, purifier, supply tank for clarifier, or an underwriter's approved container, shall not be placed above ground level during cleaning operations.

(5) Volatile flammable liquids shall not be settled in open or unprotected vessels or tanks.

(6) Flammable liquids or solvents are not to be used for cleaning floors.

(7) Cleaning solution that is spilled should be mopped up immediately.

(8) Dry cleaning by immersion and agitation in closed machines shall be carried on only in machines that have been approved for this type of cleaning.

(9) Dry cleaning by immersion and agitation in open vessels is prohibited. When articles cannot be washed in the customary machines, they may be cleaned on scouring or brushing tables, or in approved scrubbing tubs. In such instances, not more than 3 gallons of solvent are to be used at one time.

c. **Spotting**

(1) Spotting is a special hazard because of the low flash point of most liquids sold for spotting. Too much friction in rubbing spots can cause ignition of the material.

(2) Avoid inhaling vapors when getting close to material during spotting operation.

(3) Not more than one quart of flammable solvent should be used at one time during spotting operations. The solvent shall be stored in and applied from an approved safety can.

(4) Containers used to dispense flammable or toxic solvents shall be labeled in accordance with Chapter 20.

d. **Disposal of Liquids.** Cleaning fluids are ordinarily distilled for reuse, or, when necessary, are disposed of completely. The following rules for distillation and disposal should be followed. For further details see NFPA Pamphlet No. 32 and the current edition of The National Fire Code, Vol. 1.

(1) Flammable liquids shall not be discharged into drains or sewers. When disposal presents an accident, health, or fire hazard, the safety engineer, fire chief, district fire protection engineer, or medical officer shall be consulted for proper disposal method.

(2) Stills are not to be used for storage purposes.

(3) Distilling apparatus should be drained of solvents at the close of business each day.

(4) Stills, condensers, and treating tanks shall be of substantial construction, mounted on substantial fire resistive foundation or framework, and shall be of a type which will not expose the liquid during any part of the process or reclamation. Steam or hot water *only* shall be used to secure the necessary temperature. Stills and condensers shall be liquid and gas tight.

(5) Each still shall be equipped with a vacuum and pressure relief valve arranged to discharge outside the building. Relief valve shall not be less than 1½ inches and set not over 5 pounds. When a shut-off valve is installed between still and condenser the relief valve shall be located on the still side of shut-off valve. A check valve shall be installed in the steam line between the boiler and the still.

(6) Each still should be provided with an automatic heat actuated emergency drain connection of ample capacity to discharge entire contents to underground storage tanks within a period of five minutes.

(7) Where not practical nor desirable to distill cleaning fluids for reuse, the storage, handling, or disposal of same shall be in accordance with the standard Navy Department practice for handling or disposing of contaminated volatile liquids.

6. Fire Protection. Since fire hazards in a dry cleaning shop are particularly great, constant attention to all precautions is essential.

a. Equipment. The following equipment shall be used to insure the highest possible degree of safety:

(1) An asbestos blanket not less than 7 x 7 feet and a boat hook with a handle at least 6 feet long shall be provided for each dry cleaning room and shall be kept on a convenient rack at the principal entrance.

(2) Approved extinguishing devices of a type suitable for use on oil fires (class B) shall be provided for every room or area where flammable liquids are stored or used. In no case shall there be less than one extinguisher at each entrance of every room or area where liquids are stored or used.

b. General Precautions

(1) Fire fighting equipment shall be inspected regularly to insure its immediate usability in case of emergency.

(2) Smoking is strictly prohibited in dry cleaning rooms. "No Smoking" signs shall be conspicuously posted.

7. Fire Fighting. In case of fire, call the Fire Department immediately. Employees should then proceed to operate *only* as an auxiliary fire brigade by assisting the regular fire fighters.

a. Ventilating Systems. Shut down the ventilating system immediately in case of fire. Interlocks should be provided to accomplish this from automatic extinguishing systems.

b. Use of Automatic Systems. Use the automatic extinguishing system. *Do not stay in the room for purposes of manual fire fighting unless the fire is confined to a small portion of the room.* Flammable liquids cause too much heat and smoke to allow manual fire fighting.

c. Principal Methods of Extinguishing

(1) Automatic covers will smother fire when they are closed automatically by operation of a fusible link. They are suitable for any size tank but not where objects being dipped, or conveyors, may prevent tight closing.

(2) Carbon dioxide extinguishers are effective for gasoline fires in small tanks. They are also satisfactory for use on alcohol fires.

(3) Carbon dioxide automatic flooding systems are acceptable for extinguishing fires in any flammable liquid.

(4) A dry chemical extinguisher is effective for class B and class C fires and for alcohol fires.

(5) A foam extinguisher is effective for class B fires. Special types of foam are needed for alcohol fires.

(6) Automatic foam systems provide excellent protection against petroleum fires if properly designed. Special alcohol-resistant type foam must be used for alcohol fires.

(7) Water spray (fog) extinguishes fires in fuel oil, linseed oil, lubricating oil and other heavy liquids. Water spray does not readily extinguish fires from kerosene, gasoline, and other light liquids but does absorb heat and help prevent spread of the fire to other combustibles.

(8) Automatic sprinklers are not effective extinguishers on petroleum fires but do absorb heat and keep the surroundings

cool until the liquid fire has been extinguished by other means.

(9) Solid hose streams are good for keeping tanks cool or for washing burning spills on the floor away from danger points. A hose stream serves only to spread fire when directed into open tanks of gasoline and similar liquids.

d. After-Fire Care. Cool all embers and hot metal surfaces to erase the danger of reignition.

1918. BARBER SHOP

1. General Rules

a. Keep the barber shop clean.

b. Observe personal cleanliness. Barbers shall be examined by the medical officer at regular intervals.

c. Do not perform barber services on persons showing symptoms of diseases of the scalp or skin unless the medical officer has directed in writing that these services be performed.

d. Do not remove ingrown hairs or blackheads for customers.

2. Use and Care of Equipment

a. Use extreme caution in handling such potentially dangerous equipment as razors and scissors. Avoid jostling.

b. Sterilize such equipment as razors, scissors, clippers, combs, and brushes before using.

c. In shops doing a large amount of business alternate clippers should be used so that the clippers will not become overheated.

d. Keep sterilizing cabinets in the proper sterilizing condition in accordance with instructions from the medical officer.

1919. BEAUTY SHOP

1. General Care

a. Keep the beauty shop clean.

b. Observe personal cleanliness. Beauty shop operators shall be examined by the medical officer at regular intervals.

c. Do not perform beauty shop services on persons showing symptoms of diseases of the scalp or skin unless the medical officer has directed in writing that these services be performed.

d. Do not remove ingrown hairs or blackheads for customers.

2. Equipment

a. Hand-Operated Tools

(1) Use extreme caution in handling such potentially dangerous equipment as razors, and scissors. Do not carry scissors, razors, and other such equipment in your pockets. Avoid jostling.

(2) Sterilize equipment such as razors, scissors, clippers, combs, and brushes before using.

(3) Keep sterilizing cabinets in the proper sterilizing condition in accordance with instructions from the medical officer.

(4) Always follow strictly the manufacturer's instructions for use of equipment when giving a machineless wave.

(5) When giving machineless waves use new aluminum foil pads and absorbents for each customer.

b. Permanent Wave Machines

(1) Do not leave the customer during the time the machine is being heated. The thermostat may fail to work automatically and cause severe burns.

(2) Check time-clock to determine whether it is working properly.

(3) As a fire prevention measure, do not use flammable covers on permanent wave units or dryers when these machines are not in use.

(4) Supplies used for a permanent wave machine must be those which are specifically designed for that machine.

1920. WATCH REPAIR SHOP

The following precautions to insure personal protection are to be observed in the watch repair shop:

1. Exercise care to prevent cutting hands on broken lenses and crystals.
2. Wear goggles when using a crystal grinding machine or lathe.

1921. LAUNDRY

1. Care of Laundry Room

a. Store acids, bleaches, and other strong solutions in cool, dry areas on lower shelves only.

b. Materials or bundles shall not be piled on shelves in such a way that they protrude into passageways or are likely to fall.

c. Keep the floor drains unclogged.

d. Sweep suds and water down the drains frequently.

e. Sleeping in the laundry room is prohibited.

2. Personal Protection

a. Wear proper personal protective equipment such as goggles, rubber gloves, and rubber aprons when handling or using acids, bleaches, solvents, boiler compounds, and caustic solutions.

b. Employees shall not wear neckties or loose-fitting clothing, and female employees shall wear a protective covering over their hair.

c. Wear goggles when using an air hose to blow dirt from pockets and cuffs.

d. Do not attempt to pour acid from a carboy without use of a suitable carboy dispenser or rocker.

e. If caustic solutions are spilled on the body, thoroughly wash the affected parts in accordance with posted instructions. Report to the dispensary for examination and for further treatment.

3. Preparing Clothes for the Laundry

a. When using a truck for heavy bundles of clothing the load should be placed so that the pusher has a clear view ahead.

b. Dump laundry out of bags. Do not reach into the bags to pull the laundry out.

c. Be sure that the pockets of clothing to be laundered are empty.

d. Keep safety pins closed.

4. General Safety Rules

a. Nails projecting from soap or washing powder boxes or barrels shall be removed promptly when the package is first opened.

b. All crating and packing materials shall be disposed of at the time the package is opened.

c. Storage bins, shelving, and timbers shall be watched for ragged edges and splinters, and such defects shall be corrected immediately.

d. Barrels, boxes, and containers shall be properly marked as to contents and shall be stored so that the label can be seen without moving the container.

e. All machines and safety devices shall be checked daily for defects, and any necessary repairs shall be made promptly.

5. Equipment

a. Washer

(1) Driving mechanisms of washers should be fully encased by metal guards.

(2) Be sure the power is off before loading or unloading the machine.

(3) Avoid straining muscles when unloading the washer. Do not attempt to unload too much at one time.

(4) Machines should be provided with approved means for holding the shell doors open.

(5) Safety interlocks are to be provided to prevent the cylinder from operating when the machine is being loaded or unloaded, except when using the "inching" device.

(6) The brakes should be capable of stopping and holding the cylinder against rotation when the current is shut off.

(7) Inspect cylinder doors daily to determine that they are in proper working condition.

(8) Cylinder doors should be fitted and wedged in such a manner as to prevent movement when they are locked.

(9) Swing the apron out of the way before closing cylinder doors.

(10) Latch the cylinder doors before starting the machine. The latch handles should be placed securely in their wells.

(11) Do not turn on the steam until the doors are closed and the safety switch is on. Never assume that the safety switch is on; be sure.

(12) Do not open the shell doors while the machine is in operation.

(13) Do not put bleach in the water when the steam is on.

(14) Do not allow the temperature of the wash water to rise above 160°F.

(15) The tension of the belts on the wood washers should be tested frequently to

see that the belts are not slipping. Test only when the machine is inoperative.

(16) Never shift belts by hand.

(17) Try to prevent rust remover from coming into contact with your skin. Thoroughly rinse fabrics which have been treated with rust remover.

(18) Splash guards should be installed on the floor drains to prevent the occurrence of slipping hazards.

(19) The washing machine should be provided with a drain which carries away suds and water without wetting the floor.

b. Extractor

(1) Check safety devices before operating the machine. If the mentioned safety devices are inoperative, *secure the extractor and do not use until it is repaired.*

(2) Never operate the extractor with the cover open. This has often resulted in the death of the operator.

(3) Do not exceed the rated capacity when loading the machine. Overloading is injurious to the machine as well as an accident hazard to personnel.

(4) Distribute the load evenly. If the machine vibrates excessively, or the basket wobbles, stop the machine and redistribute the load.

(5) Never overload the machine.

(6) Keep away from the extractor while it is in motion, except when starting or stopping the machine.

(7) Do not use the foot brake to stop the tub while the tub is rotating at high speed.

(8) Adhere strictly to the manufacturer's precautions as to the frequency of starting and stopping the machine.

(9) Do not leave the brake on when the extractor is empty.

(10) Inspect hoists and monorail equipment daily to determine whether they are in proper condition.

(11) Never walk or stand beneath a raised extractor basket.

(12) The extractor should be provided with a drain to carry away suds and water without wetting the floor.

c. Drying Tumbler

(1) Be sure the power is off while loading or unloading the machine.

(2) Never overload the machine.

(3) The tumbler shall be equipped with an approved means of holding the doors or covers on cylinders and outer shell open while loading or unloading the machine.

(4) Inspect daily the balancing mechanisms and safety latches to insure that the door will be secure when open.

(5) The interlocks on the doors, which prevent the cylinder and fan from rotating when the doors are open, shall be inspected daily to determine that they are in proper working condition.

(6) High speed tumblers should be equipped with a dial or other approved means of indicating the position of the cylinder doors in relation to the case door.

(7) Be sure that the cylinder doors are latched and that the latch handles are secured in their wells before the machine is started.

(8) Never open the door while the tumbler is in motion.

(9) Clean lint from tumbler screens after every four hours of operation. Dispose of it immediately, by placing it in a container and covering it with water.

(10) Sufficient moisture should be maintained to prevent fires. Clothes should be removed from tumbler when dried to a weight not exceeding 30% above dry weight of clothes.

(11) Make sure that fans, feed belts, and cylinder drive mechanisms are enclosed in metal guards.

d. Mangle

(1) Keep hands at least 6 inches from the rollers when operating the machine.

(2) Never overlap pieces being run through the machine.

(3) When an article has started to pass through the rollers, never attempt to withdraw it.

(4) If an article becomes bound or fouled shut off the current and loosen the rollers. Do not attempt to extract the article in any other manner.

(5) The machine shall be equipped with a safety guard across the front of the feed rollers which will quickly stop the rollers when the guard is struck with the hand.

(6) This guard shall be inspected daily to determine that it is functioning properly.

(7) Do not operate the mangle when this safety guard is not functioning properly.

e. **Press**

(1) Nobody but the operator should be permitted to stand close to the press when it is in use.

(2) Keep hands clear of the buck when the head is coming down.

(3) Air-operated presses are equipped with two push-button operating valves for safety. The arrangement is such that both hands must be used to close the press, thereby making it impossible for a hand of the operator to be caught in the press. *In no case shall either of these valves be by passed or left permanently open.*

(4) Release the head when the press is not in use.

(5) When releasing the head, be sure nobody is standing at either end of the machine.

(6) Each press, excluding the hand or foot operated types, shall be equipped with an approved safety device which will prevent the operator's fingers being caught in the machine.

f. **Hand Iron**

(1) Each electrically heated iron shall be equipped with a pilot light to indicate when the current is on.

(2) Each iron shall be turned off and disconnected immediately after use and placed until cool where there is no danger of burning to articles or to personnel.

(3) Each iron shall be equipped with a rubber sheathed, moisture resistant, asbestos insulated, 14AWG, 3-conductor heater cord in accordance with the Underwriters' Laboratory Type designation HSJ.

g. **Bundle Tying Machine.** The machine shall be equipped with an appropriate guard to prevent the operator's hands coming into contact with the moving arm.

h. **Marking Machine.** An electric marking machine shall be equipped with an appropriate guard to prevent the operator's fingers coming into contact with the marking dies.

Chapter 20

HAZARDOUS MATERIALS

GENERAL

2001. SCOPE

The term *hazardous* as applied to materials covers principally those that are either flammable, are health hazards, or both. The materials included by no means represent all hazardous materials used in Navy shore activities but are representative of classes of materials or specific materials which are particularly hazardous or which Navy use experience has indicated the need for specific handling and storage precautions. Hazardous ordnance materials are not included in this Chapter (see 2003.1a).

2002. PURPOSE

The purpose of this chapter is to alert safety and supervisory personnel to the hazards involved in the use of certain materials and to provide the necessary precautionary measures. With respect to health hazards, which are primarily medical in nature, it is the intent of this chapter to supply sufficient information to enable non-medical personnel to identify the possible existence of such hazards and to provide precautionary or remedial measures which do not involve complex medical terminology (see article 2003.2).

2003. ASSISTANCE AND GUIDANCE

1. **Flammables.** For control measures applicable to the hazards of flammable materials in addition to those contained herein, safety personnel should maintain a continuous liaison with fire department personnel and should refer to the various available pertinent publications, some of which are:

U. S. Navy Fire-Fighting Manual, OPNAV Instruction 11320.15 and Fire Protection Engineering, NAVDOCKS DM-8.

National Fire Codes, Standards, Recommended Practices, and manuals of the National Fire Protection Association.

Material and Equipment Lists and Standards of the Underwriters' Laboratories, Inc.

a. **Ordnance Materials.** The hazards and precautions pertaining to ordnance material are contained in Ordnance Pamphlet 3347, *United States Navy Ordnance Safety Precautions*.

2. **Health Hazards.** The problems of occupational health involving hazardous materials are primarily the responsibility of the medical department and safety personnel should maintain a continuous liaison with that department where available. Activities not having an industrial medical officer or industrial hygiene personnel should request the assistance of off-base hygienists in accordance with the provisions of NCPI 792.

a. **Threshold Limit Values.** Annually, the Bureau of Medicine and Surgery promulgates (BUMED Instruction 6270 series) a listing of threshold limit values of materials the fumes or dusts of which are considered to be toxic in atmospheric concentrations exceeding those limits. The list is primarily for the assistance of industrial hygienists and other industrial medical personnel in appraising the health hazards of toxic atmospheres. This quantitative information is but one of several criteria required to fully evaluate the hazard of any particular environment; it is of value to safety personnel in that it provides a comparative rating of the toxic concentrations of materials which, when combined with other specific information, can be useful in estimating the severity of the hazard.

3. **Detection of Hazardous Atmospheres.** Information on the availability of instruments

for the qualitative and quantitative measurement of the more common hazardous compounds may be found in the *Safety Equipment Manual,* NAVEXOS P-422, Sections 1 and 4.

ACIDS AND ALKALIES

2005. GENERAL

There are innumerable acids and alkalies used in naval shore activities in the form of pure compounds and mixtures having strong acidic or alkaline reactions. In general, acids and alkalies are similar in their injurious properties in that either may cause:

Corrosion (chemical burn) by direct contact with the skin or eyes or indirectly through the clothing.

Intoxication or suffocation by inhalation of their fumes. The fumes of some compounds are toxic or poisonous while others will displace air thereby producing a suffocating atmosphere.

Poisoning when taken internally.

Fire and explosion because of their instability under adverse storage conditions. Also, some acids are strong oxidizing agents which can generate ignition temperatures upon contact with organic materials and other chemicals.

1. **Precautions.** The following general precautions are to be observed in operations involving the handling of acids and alkalies.

a. **Warning Signs and Labels.** Signs should be posted near established operations, warning workers of the principal hazards of the operation and of the chemicals being used. All containers shall be appropriately labeled (see articles 2085-2090).

b. **Showers and Eye Fountains.** Safety showers and eye fountains shall be provided near work areas. Showers shall have deluge-type heads and quick-opening or automatic valves.

c. **Ventilation.** Where injurious fumes are habitually generated by a fixed installation, permanent exhaust ventilation shall be provided. Temporary fuming conditions may be ventilated by portable equipment, or personnel should wear respirators approved for the type and concentrations of the fumes encountered.

d. **Mixing and Diluting.** Unless the results of a reaction are definitely known, acids and alkalies shall not be mixed with other chemicals. Strong acids and strong oxidizing agents may react violently or produce explosive products; also, toxic gases may be evolved if acid is mixed with such chemicals as sulfides, cyanides, nitrates, and nitrites. The diluting of acids with water can generate considerable heat; acid should always be added to water, not water to acid. The addition should be done slowly with constant stirring.

2. **Personal Protection**

a. **Protective Clothing.** Workers who handle acids and alkalies should be provided, depending on the severity of exposure, with the following clothing:

(1) Chemically resistant rubber or plastic gloves.

(2) Rubber or plastic chemical goggles. Where complete face protection is required, plastic face shields should be worn in addition to the chemical goggles.

(3) Chemically resistant rubber boots or overshoes, or shoes with resistant soles, depending on the nature of the exposure.

(4) Rubber or plastic aprons.

(5) Suitable head protection in the form of protective helmets (hard hats) or soft brimmed felt hat where falling objects are not a hazard.

(6) For severe conditions requiring full protection, a rubber hood, coat and overalls or coveralls, rubber boots, and gauntlet gloves are recommended.

b. **Respiratory Protection.** Since gas masks are approved for maximum atmospheric

concentration of only 2 to 3 percent of the contaminant, their use is not recommended unless it is known that the fume concentration is less and that there will be sufficient oxygen to support life (greater than 16% by volume). Self-contained breathing apparatus should be available for emergencies where neither the oxygen content nor the contaminant concentration are definitely known.

3. First Aid. When workers have been seriously injured by exposure to acids or alkalies, a doctor shall be summoned immediately and the following applicable first-aid procedures initiated unless otherwise directed by medical advice:

a. Chemical Skin Burns. The affected skin area shall be flushed with clean water for 15 minutes. When comparatively large areas of the body and clothing are affected, the individual should be placed in a deluge shower (see 2005.1b) immediately and the saturated clothing removed as soon as possible.

b. Chemical Eye Burns. Acids and alkalies act very rapidly on the eyes and may cause blindness unless washed out with water immediately. Allow water from an eye fountain (see 2005.1b), drinking fountain, or from a hose under moderate pressure to flow into the opened eyes and continue to flush for 15 minutes.

c. Neutralizers. Unless otherwise authorized by the medical department, chemical neutralizing solutions shall *not* be used to flush the skin or eyes. Only copious quantities of clean water shall be used.

d. Inhalation. Workers exposed to acid or alkali fumes should be removed to an uncontaminated area and kept under observation until the probability of developing complications or delayed pulmonary reaction is no longer present. If oxygen inhalation apparatus is available, oxygen may be administered but only by a person authorized by a physician. If the patient is overcome and apparently not breathing, artificial respiration should be started immediately.

e. Ingestion. When acids or alkalies are taken internally, antidotes should be given at once. The following procedures are to be followed unless a physician advises otherwise:

(1) Acids. Give either 3 tablespoons of milk of magnesia or the whites of 12 eggs in several glasses of water or give several glasses of milk. *Avoid causing vomiting.*

(2) Alkalies. Give 2 tablespoons of vinegar in 2 glasses of water followed with the whites of 2 eggs or 6 tablespoons of olive or cooking oil. *Avoid causing vomiting.*

2006. ACID TRANSFER

The following precautions are applicable to the transferring of acids from and to the various types of containers and to the handling of acids in such containers.

1. Tank Trucks

a. Responsibility. Supervision and responsibility for unloading procedure shall be assigned to a particular individual.

b. Unloading Site. Unloading should preferably be done in daylight. When it is necessary to unload at night, adequate lighting shall be provided in the area involved in the operation. The immediate truck parking area should be elevated so that leakage and spillage will drain away from the truck and adjacent structures. A hose with running water and appropriate approved breathing apparatus shall be near at hand.

c. Truck Position. To provide for quick removal of truck in the event of an emergency, the truck should be positioned so that it can be driven away in the forward direction. The brakes shall be set, wheels blocked, and the tank grounded.

d. Restricted Area. The number of personnel permitted in the unloading area shall be restricted to those required to perform the operation and the area shall be posted prohibiting entrance by unauthorized personnel.

e. **Gauging.** The depth of acid in the truck and receiving tanks shall be checked and the capacity of storage tank to receive the delivery ascertained. Sufficient ullage shall be left in storage tank to prevent overflow and buildup of excessive pressure incident to expansion of the acid with anticipated variations in storage temperatures.

f. **Connecting and Pumping.** Personnel making connections and disconnections should be provided with complete protective clothing. Such protected personnel should stand by during pumping and be ready to act in case of an emergency. Before pumping is started, check receiving tank vents for proper operation and insure that the unloading line from truck to receiving tank is open and all branch lines are closed. If leakage, spill, or overflow should occur during the transfer, the pump should be stopped, valves closed, and the spill cleaned up before other actions are taken.

g. **Shut Down.** When truck tank is empty, pumping shall be stopped and all valves closed in the unloading line and storage tank vent.

2. **Storage Tanks**

a. **Material.** The material for tanks, piping, pumps, and valves must be carefully selected according to the type of acid and its strength. For example, steel is generally considered satisfactory for storage of technical grade sulfuric acid having a gravity of 66° Bé, whereas acid resistant linings or special alloys are required for strengths less than 52° Bé; acid resistant linings or special alloys should be used for all strengths of hydrochloric acid; and technical grade nitric acid or stronger may be stored in stainless steel or aluminum alloy tanks, the latter being preferred for strengths exceeding 95%.

b. **Foundations.** Permanent tank foundations shall be substantially constructed, preferably of concrete, and should be arranged to permit ready access for inspection of the entire tank.

c. **Vents.** Storage tanks shall be provided with vent valves of sufficient size to permit equalization of pressure while being filled and emptied, and to periodically vent vapor pressures caused by elevated atmospheric temperatures.

d. **Catch Basin.** Tanks should be surrounded with a catch basin, pit, or depression large enough to contain the full capacity of the tank in case of rupture or major leakage.

e. **Delivery.** Delivery of acid from storage tanks shall be by gravity or by pumps provided with splash shields at points of potential leakage. Air pressure shall not be used.

f. **Cleaning and Repairs.** Wherever possible tanks should be cleaned from the outside, using clean-out doors. Before any work is done on a tank, it shall be drained as completely as possible, any remaining sludge washed out with large quantities of water, the residual acid neutralized with sufficient soda ash or lime, and finally filled completely with water and drained. Any cleaning or repairing of tanks requiring hot work and/or entry of personnel shall be performed in accordance with the precautions in articles 2070 through 2080, recognizing that, in addition to toxic fumes, hydrogen generated by reaction of the acid with the tank metal may be present. Wherever possible piping should be disconnected and a blind flange installed on the open end; otherwise, valves shall be locked and tagged closed. Switches to pumps and other power driven equipment shall be tagged and locked open.

3. **Drums**

a. **Protection.** Personnel handling full or empty drums shall wear goggles and proper protective clothing (see 2005.2).

b. **Storing.** Filled drums should be stored under cover where they will not be exposed to direct sunlight or to excessively high temperatures. They should be off the ground with the large closure upward.

c. **Venting.** The closure (above liquid level) shall be loosened at frequent intervals to relieve possible internal pressure; after venting, retighten closure.

d. **Closure Removal.** A long handled pipe or plug wrench should be used to remove closure. Face away during operation; open one full turn, and after internal pressure equalizes, the closure may be removed.

e. **Emptying.** Drums shall be emptied by gravity only, using a faucet or safety siphon. Air pressure shall not be used.

f. **Washing.** Drums to be returned to a consignor shall not be washed nor shall any water or other liquid foreign to the original contents be put into the drum.

g. **Flame and Sparks.** Open flames and any spark-producing equipment or operation shall not be permitted on or near filled or empty drums. Smoking shall be prohibited while handling or emptying drums.

4. **Carboys**

a. **Protection.** Goggles and proper protective clothing (see 2005.2) shall be worn when handling full or empty carboys.

b. **Handling.** Specially designed handtrucks or fork-lift trucks should be used for transporting boxed carboys. Do not use hooks; never "walk" a carboy on the bottom edges; and do not handle carboys by the closure or neck of the bottle.

c. **Opening.** When opening a carboy, turn the face away and place the hands on the side of the neck, not above the closure. Use a wire cutter to remove the wire seal; do not loosen wire by twisting or prying, this may break the neck of the bottle.

d. **Emptying.** Carboys shall be emptied by the use of a tilter designed for this purpose or by a safety siphon. Do not use air pressure.

e. **Storage.** Full and empty boxed carboys should be stored under cover and off the ground. Full carboys should not be stored more than three tiers high. Empty carboys may be stored four tiers high on their sides with their necks facing away from aisles or passageways. When removing or stacking carboys, the neck of the bottle should not be tilted toward the workman.

2007. PRINCIPAL CHEMICALS

1. **Acetic Acid.** In its strongest form, glacial acetic acid, the acid burns the skin quickly and is injurious to the eyes. The fumes are irritating to the respiratory tract and, being flammable, heat and open flames should be avoided.

2. **Carbolic Acid (phenol).** Carbolic acid has no marked action on metals but rapidly attacks the skin and eyes and is highly poisonous if swallowed. Its fumes are poisonous upon inhalation. The acid is not flammable at ordinary temperatures.

3. **Chromic Acid (Chromium Trioxide).** Chromic acid is a strong acid and a powerful oxidizing agent. Concentrated solutions attack most common metals at elevated temperatures. It reacts rapidly with many organic materials and may ignite such materials upon immediate or prolonged contact. The solid acid or concentrated solutions destroy body tissues and cause severe burns. Contact with the eyes may result in loss of sight if not treated promptly. Chromic acid dust or mist is very irritating to the respiratory tract. Prolonged exposure to the fumes from chromic acid plating baths can cause ulcerations of the skin and nasal passages.

4. **Hydrochloric Acid.** Hydrochloric acid is very corrosive to most metals, with evolution of highly flammable hydrogen gas. The acid and its gaseous form, hydrogen chloride, can cause severe burns on contact with the body or eyes or if taken internally. Its fumes are highly irritating to the eyes and respiratory tract. Neither the gas nor the acid solution in itself is flammable.

5. **Hydrofluoric Acid.** The acid is a water solution of hydrogen fluoride which vaporizes at temperatures above 67° F. The

564-350 O - 74 - 21

acid and its vapors will attack glass, certain metals, and many organic materials. In its reaction with metals, highly flammable hydrogen gas is formed. Hydrofluoric acid in itself is nonflammable. Acid solutions and the fumes in contact with any part of the body may immediately cause serious burns and are extremely irritating to the respiratory tract and the eyes. If the acid is not immediately removed from the eyes by thorough irrigation with water, there may be prolonged or permanent visual damage or total loss of vision.

6. **Nitric Acid.** Nitric acid vigorously attacks most common metals. It attacks most organic materials and may cause spontaneous ignition upon contact with such materials as sawdust, excelsior, wood shavings, paper, and cotton waste. Under certain conditions, the acid or its fumes will nitrate cellulosic materials such as wood or cotton which greatly increases their flammability. As with other strong acids, nitric acid is very corrosive to body tissues and will cause serious burns and eye injuries. The fumes are particularly toxic when inhaled, causing immediate respiratory irritation; and prolonged exposure may cause lung congestion (pulmonary edema). The onset of symptoms following inhalation may be delayed for several hours.

7. **Mixed Acid.** Mixed acid is a mixture of nitric and sulfuric acids, the hazards of which are primarily those of nitric acid (see 2007.6).

8. **Oxalic Acid.** Oxalic acid is a colorless and odorless crystalline solid. In solution it has a weak action on metals and slightly corrodes the skin. It is poisonous if taken internally or the dust inhaled. It is not flammable.

9. **Sulfuric Acid.** Due to its corrosive and oxidizing properties, sulfuric acid attacks most metals and produces severe burns upon contact with body tissues of any kind. Its fumes are irritating to the eyes and respiratory tract. The acid is not flammable but strong concentrations may cause ignition upon contact with liquids and solids. It also generates highly flammable hydrogen gas by its reaction with most metals.

10. **Sodium Bisulfate (Sodium Acid Sulfate).** Although sodium bisulphate is not classed as an acid, in solution it is strongly acid in reaction and is used as a substitute for sulfuric acid.

11. **Ammonia.** Ammonia is a colorless gas which is severely irritating to the skin, eyes, and respiratory tract. The water solution of the gas, known as ammonium hydroxide and commonly used in industry and the household, gives off ammonia fumes which are harmful to the eyes and respiratory tract.

12. **Caustic Potash (Potassium Hydroxide).** See caustic soda (2007.13).

13. **Caustic Soda (Sodium Hydroxide, Lye).** Caustic soda is a strong alkali and in the solid form or in solution produces severe tissue and eye burns. Caustic soda dust or mist is very irritating to the eyes and respiratory tract. It is not flammable.

14. **Soda Ash (Sodium Carbonate).** Soda ash is a fine crystalline powder. Its solutions are irritating to the eye. Soda ash dust is irritating to the eyes and respiratory tract.

PETROLEUM FUELS

2010. DEFINITION AND SCOPE

This section deals with general precautions for petroleum fuels such as gasoline, diesel oil, kerosene, pentane, heptane, octane, and leaded fuels. Specific directives for dock loading will be found in Chapter 6 and for aviation fueling in Chapter 4. Specific problems connected with a particular field of activity are covered in the appropriate chapter. Propane, butane, and other liquefied petroleum gases, will be found in articles 2040 - 2049.

2011. INSTRUCTION OF PERSONNEL

Because of the hazards involved in the widespread use of gasoline and other petroleum fuels and the varying circumstances under which they are handled, it is important that thorough instructions be given all personnel concerning these dangers and the methods of preventing fires and explosions.

2012. FLASH POINT

The hazards of handling petroleum products are related to flash point. The flash point of a liquid is the lowest temperature at which it gives off vapor near the surface of the liquid or within a vessel in sufficient quantity to form flammable mixtures with air. Products which give off flammable vapors at or below 80°F., such as gasoline, solvents, and most crude oils are the most hazardous of all petroleum products to handle. For example, gasoline has a flash point of about -45° and crude oil has a flash point of 60°F. Certain petroleum products are slightly less hazardous to handle, such as kerosene, light and heavy fuels and lubricating oil which have a flash point above 80°F. Kerosene has a flash point of about 115°F. and will not ignite at ordinary atmospheric temperatures – but if it is heated above 110°F., it will give off sufficient vapors to burn and may explode under certain conditions described in article 2021.1.

2013. STORAGE

In addition to the following precautions, petroleum fuels shall be stored in accordance with the procedures and precautions of *Military Standardization Handbook for Petroleum Operations*, MIL-HDBK-201:

1. **Construction Features.** Nonflammable materials should be used for construction of building in which hydrocarbons and other flammables will be stored. Open type structures are preferred.

2. **Aboveground Tanks.** For large aboveground tanks, concrete, earthen, or other nonflammable berms are required.

3. **Lighting.** Explosion-proof type fixtures shall be used.

4. **Ventilation.** Natural ventilation of open type buildings is sufficient.

5. **Lightning.** Storage spaces should be adequately protected from lightning by use of lightning arresters.

6. **Inspection.** Containers should be periodically inspected for leaks at bungs and chimes, and bungs tightened using a new gasket if necessary to stop leaks.

7. **Surroundings.** The area surrounding hydrocarbon fuel storage should be clear in order to cut down the spread of fire should it occur.

8. **Motor Vehicles.** The exhaust of motor vehicles and the stacks of coal burning engines shall be equipped with an anti-spark device (flame arrester) when working in or adjacent to the area surrounding hydrocarbon fuel storage.

2014. FACTORS NECESSARY FOR COMBUSTION

1. **Fuel.** Fuel in the form of vapor must be present when anything burns, because it is not the actual substance which is con-

sumed by the flame, but the vapor of the substance in combination with the oxygen of the air. A piece of wood held in a flame will not catch fire until it has been heated to a point where vapor is given off. As previously stated, some petroleum products give off flammable vapors at or below 80°F., and therefore constitute greater fire hazards at lower ambient temperatures than those products with a higher flash point. Gasoline, a highly volatile, flammable product, will vaporize at ordinary atmospheric temperatures and pressures. Therefore, under such conditions gasoline furnishes the first factor necessary for combustion.

2. **Air.** For example, a gasoline vapor-air mixture containing from about 1 percent to 6 percent gasoline vapor would have sufficient fuel (vapor) and sufficient air (oxygen) to explode. Thus, if anywhere from 1 to 6 cubic feet of gasoline vapor were introduced into a box containing 100 cubic feet of air, a mixture would exist which would readily ignite or explode upon the introduction of flame. Explosion will not take place if the mixture is either too rich or too lean.

3. **Heat.** Sufficient heat to raise the fuel to its ignition temperature is sometimes supplied unintentionally by a number of sources such as sparks or flame, if necessary precautions are not taken. Spontaneous ignition may also ignite flammable vapors, if they are present.

4. **Occurrence.** Since all petroleum products, at given temperatures and pressures, furnish the first factor necessary for fire – namely fuel in the form of vapor – all possible sources of ignition must be effectively controlled in the presence of these products. Because of the importance of these factors of ignition in fire precautions, they are discussed at some length in the following paragraphs.

2015. FUEL OIL VAPOR

1. **Combustibility.** Fuel oil itself is nonexplosive, very difficult to ignite in bulk, and is not normally capable of spontaneous combustion. The vapor from this oil, however, is explosive when mixed with air in certain proportions described in 2021.1.

2. **Characteristics.** This vapor is heavier than air and tends to accumulate in low levels, such as bilges and bottoms of tanks, where it may remain undiscovered until ignited by a naked light or spark.

3. **Where Found.** Vapor is always present in a partly filled tank or in one that has contained fuel oil or other petroleum products unless the vapor has been removed by artificial means. It is expelled through the vents from such tanks while they are being filled.

4. **Leaking.** A fuel leak allowed to continue in any part of the fuel-burning system may result in an accumulation of enough vapor to form an explosive mixture with the air.

5. **Detection of Vapor.** Portable vapor-indicator instruments have been developed for detecting the presence of petroleum vapors, and these instruments should be freely utilized, not only for detecting vapors during the tank cleaning process described in Chapter 11 of this publication but also for detecting vapors in cofferdams, voids, and storeroom spaces in which oil leaks occur, or in which vapor is suspected to have collected.

6. **Freeing Tanks of Vapor.** Whenever a tank is to be entered or whenever any work is to be done in it requiring heated rivets, hammering, etc., or whenever such work is done in the vicinity of open tanks or pipes, all such tanks and all pipes leading to or from such tanks shall be cleared of vapors, after the fuel oil has been removed.

7. **Ventilation of Tank.** Fuel oil and other fuel tanks shall be continuously ventilated by means of a portable blower during the time that work is being done in them.

2016. CONTROLLING VAPORS

1. **Spills.** Take care that no spills occur.

2. **Overflow.** Avoid spills from overflow when loading storage tanks by gaging tanks prior to loading.

3. **Leaks.** Never neglect leaks. Make frequent inspections for leaks in tank seams,

tank shells, and pipe joints. All outlets from tanks, except vents, shall be closed.

4. **Cleaning Up Spills.** If spills or leaks occur, clean them up immediately. Gasoline-soaked ground should be washed with water or covered with sand or dry earth. The area should be policed until flammable vapor has been eliminated.

5. **Temperature Control.** When temperatures are excessively high, cool storage tanks by sprinkling, or by playing water over them.

6. **Closing Containers.** Keep gasoline containers, whether empty or full, closed tightly.

7. **Empty Containers.** Beware of empty gasoline containers since vapors may be present.

8. **Ventilation.** Insure proper ventilation of all enclosed spaces in which vapors may accumulate.

2017. ACCIDENTAL IGNITION CAUSES

Ignition of the explosive mixtures may be caused by an open light, electric spark, static discharge, spark made by striking metal, heat of the filament of broken electric lamps, smoking sparks from funnel of galley, fires under boilers, arcing of the brushes of a motor, grounds or shorts in electric circuits, arcing in any electric apparatus, opening any electric switch carrying current even in a flashlight, the turning off of an ordinary electric switch, induced electric charges formed by rubbing two surfaces together, motion of a rapidly moving belt, or by nails in shoes hitting or rubbing metal or stones. Refer to Chapter 15 of *Safety Precautions* for possible hazards due to operation nearby of radio and other electronic transmitting equipment. Ignition can occur in so many ways that reliance cannot be placed upon safety measures designed to control this feature alone, and the most careful precaution is necessary to prevent the accumulation of gasoline vapor. However, the following precautions shall be most strictly observed and eternal vigilance maintained to prevent the ignition of fuel vapors.

1. **Naked Lights.** While oil, gasoline, and other hydrocarbons are being received or discharged, naked lights, smoking and electrical apparatus liable to spark shall not be permitted on board ship or within 50 feet of an oil hose, tank, compartment containing a tank, pump, or the vent from a tank. The carrying of matches or cigarette lighters on the person while at work loading, unloading, or cleaning tanks shall be prohibited. Portable lights of all kinds shall be explosion-proof in the vicinity of gasoline and vapor-proof in the vicinity of fuel oil. Their wires shall be well insulated.

2. **Smoking.** "No Smoking" signs and other appropriate visual warnings shall be conspicuously posted in the vicinity of loading and handling of petroleum products and the cleaning of tanks.

3. **Bearer of Naked Light.** No tugboat, locomotive, automobile, or other gasoline or diesel propelled equipment will be allowed to approach within 200 feet of loading operations unless specific approval is granted by appropriate supervisory personnel.

4. **Clothing.** Men engaged in loading, unloading or cleaning tanks shall not wear boots or shoes with exposed nails or metal fastenings. Do not allow any buttons made of sparking metal to be exposed. Beware of key chains, belt buckles, and tools in pockets. In highly hazardous areas, personnel are not permitted to wear outer or under garments made of wool, silk, or synthetic textiles such as rayon and nylon, as these materials can generate sufficient static electricity to cause ignition of highly flammable products.

5. **Static Electricity.**

a. **Danger.** Dangerous static charges are frequently accumulated and discharged in such a way that fires and explosions result unless proper precautions are taken.

b. **Fluid Flow.** Static electricity is produced when gasoline or similar flammable liquids undergo movement such as flow through a hose, agitation of petroleum liquid, or when poured from one receptacle to another or when passed through a filter.

paints are formulated to withstand scrubbing and fading, so that touch-up patch painting is not too obvious. Therefore, touching up rather than complete repainting shall be done when practicable. Repainting in lieu of cleaning must never be permitted.

2. **Color.** It is also required that each cylinder be identified, with respect to gases or fluids contained therein, by the color of the paints applied for preservation. The colors shall be in accordance with *Military Standard Color Code for Pipelines and for Compressed Gas Cylinders*, MIL - STD - 101.

2043. REPAIRING CYLINDERS AND VALVES

1. **Maintenance.** Cylinders shall be repaired only by personnel who are specifically authorized to perform such work. To assure that all cylinders are in satisfactory and serviceable condition, periodic inspections should be made; cylinders found with any of the following defects should be drained and purged of gas and turned into the nearest naval supply point, in exchange for other cylinders:

a. Severely dented, gouged, or corroded.

b. Evidence of fire damage (carbon deposits on valves or safety plugs of cylinders containing acetylene or other flammable gases).

c. Bulges (deformation of cylinders from internal pressures).

d. Damaged, split, or leaking seams (low-pressure cylinders containing flammable gases such as acetylene, etc.).

2. **Valves.** In general, cylinders with leaking or defective valves (stripped threads, bent stems, etc.) shall be turned in to the nearest naval supply point for overhaul. Leakage from valves may be caused by the presence of dirt or foreign particles in the valves or the valve seat. The leakage may sometimes be corrected by partially opening and then closing the valve, to blow out the foreign material. If the leakage continues, the cylinders should be removed to a safe place (in the open if possible) and drained by opening the valve. The cylinders should then be tagged and turned in for overhaul and recharging.

3. **Draining Cylinders.** Cylinders containing combustible or toxic gases (acetylene, hydrogen, chlorine, etc.) should be drained through pressure regulators and their rates of discharge controlled so that dangerous accumulations of these gases will not occur.

4. **Toxic Gases.** The utmost caution should be exercised in draining cylinders containing chlorine, sulphur dioxide, anhydrous ammonia, and other toxic or irritant gases. Cylinders containing these gases should be discharged to atmosphere only under conditions assuring the prompt dispersal of these gases without hazard to personnel or property. Personnel engaged in draining these cylinders should be equipped with the necessary protective clothing, goggles, and respirators.

2044. CARE AND TESTING OF CYLINDERS

1. **Quinquennial Tests.** Interstate Commerce Commission regulations require that practically all cylinders with the exception of those containing acetylene be retested every five years. Regulations specify that cylinders for which prescribed retests have become due must not be charged and shipped until such retests have been properly made. However, cylinders which have been charged prior to the expiration of their retest period are satisfactory for shipment and use subsequent to the date of expiration.

2. **Refilling.** Do not refill cylinders unless such action is specifically approved by the bureau concerned and then only in accordance with instructions.

3. **Designated Gas.** Do not fill any cylinder with a gas other than that gas for which the cylinder has been specifically designated. Explosive mixtures may readily be formed when cylinders containing residual combustible gases such as hydrogen, propane, or acetylene are charged with air or oxygen. The reverse of this procedure is equally hazardous.

2. Fire in Adjacent Space. In the event of fire in an adjacent space, the sprinkler system, if provided and manually controlled, should be placed in operation so that the drums and structures may be thoroughly drenched during the continuation of the fire. On shipboard the drainage pumps should be operated so as to carry away the water. Where no sprinkler system is provided and steam smothering is available, the space containing gasoline should be kept sealed and the steam smothering turned on. If sprinkling and steam smothering are not available, fog nozzles attached to hoses from fire plugs should be used for drenching the drums and structures.

2020. HEALTH HAZARDS

Petroleum fuel vapors may cause anesthetic effects when inhaled. Inhalation of atmospheres containing 0.07 to 0.28 percent by volume of gasoline vapors (equivalent to about 5 to 22 percent of the lower explosive limit) may cause slight dizziness in some individuals after 3 minutes exposure; 1.1 to 2.2 percent causes severe dizziness after 3 minutes, and inhalation of 2.2 to 2.6 percent by volume causes intoxication after 10 to 12 breaths. Longer exposure or greater concentrations may cause unconsciousness or death.

1. Permissible Limit. The maximum permissible concentration of petroleum vapors in which it is safe for personnel to work an 8-hour day is 500 parts per million (0.05 percent by volume). Since the lower explosive limit is 1 to 1¼ percent for most fuels, it should be remembered that the concentration of vapors which can be tolerated by personnel is far below that required to produce explosive mixtures with air.

2. Symptoms. First symptoms of exposure to toxic vapors are headaches, nausea, and dizziness. If such symptoms are noted, they should be taken as warning of the presence of dangerous amounts of vapors in the air. Recovery from these early symptoms is usually prompt after removal to fresh air. However, if men are overcome by vapors, they should receive immediate medical attention. First aid consists of prevention of chilling and of the application of artificial respiration if breathing has stopped.

3. Leaded Gasoline. The toxicity of heavy concentrations of vapors from gasoline or other fuel is increased if it contains tetraethyllead or similar compounds added for antiknock purposes. These lead compounds may be inhaled with the fumes or may enter the body through the mouth or by absorption through the skin and are very poisonous.

a. Contaminated Tanks. No tank used for leaded gasoline shall be assumed to be free from the hazard of lead poisoning until the tank has been thoroughly cleaned, even though the combustible gas indicator shows that it is free of gasoline vapor. Special protective clothing and a fresh air hose mask must be worn until such time as the tank is declared lead free (see paragraph 6 below).

b. Repeated Exposure. Lead poisoning may result from repeated exposure to gasoline vapors in an enclosed or inadequately ventilated area where leaded gasoline has been spilled in considerable quantity. There is also a danger of lead poisoning from fumes given off by stoves or other gasoline burning equipment in which leaded fuel is used. Therefore a deleading device should be used and adequate ventilation should be insured. If operating personnel are exposed persistently to leaded gasoline, they should be rotated on the job in order to limit the period of individual exposure.

4. Injury to Skin and Eyes

a. Contact. Gasoline may cause skin irritations if allowed to remain in contact with the skin, particularly under soaked clothing or gloves. Clothing or shoes through which gasoline has soaked should be removed at once. Gasoline should be washed from the skin with soap and water. Repeated contact with gasoline removes the protective oils from the skin and causes drying, roughening, chapping, and cracking, and in some cases infections of the skin which may become serious.

b. Gloves. Oil-resistant rubber

gloves should be worn as protection by persons handling petroleum products.

c. **Gasoline as Cleaner.** Gasoline shall not be used for cleaning purposes under any circumstances.

5. **Swallowing Gasoline.** If a person swallows gasoline, first-aid should be given immediately. Give the victim a half cup of olive or cooking oil and several cups of strong coffee or tea. *Do not cause vomiting.* Medical attention should be obtained immediately.

6. **Entering Tanks.** No person shall be required or permitted to enter a tank which has contained liquid petroleum fuel except under the conditions and observing the precautions prescribed in NAVDOCKS P-342, *Fuel Storage Tank Cleaning at the Shore Establishment (Finished Product Tanks).*

2021. GASOLINE

Gasoline is a highly volatile liquid giving off a vapor which, when combined with air in the proper proportion, forms an explosive mixture that can be set off by a slight spark or flame. A violent explosion, followed by fire if liquid gasoline is present, will result. Air at ordinary atmospheric temperatures can absorb as much as 28 percent of gasoline vapor, the amount depending on the volatility and grade of the gasoline, the most volatile grades causing the higher percentages.

1. Formation of Explosive Mixture

a. **Amount of Gasoline Required.** The lower limit of explosibility of gasoline vapor and air is about 1 percent gasoline vapor by volume while the higher limit is about 6 percent gasoline vapor by volume in air. One quart of gasoline left exposed in a closed space will render explosive upon complete evaporation under ideal conditions about 520 cubic feet of air, or a space of 10 by 6½ by 8 feet. One cubic inch of gasoline will do the same thing for a space of 9 cubic feet or a space 3 by 3 by 1 foot. These figures will give an idea of the small amount of gasoline needed to produce a large volume of explosive mixtures.

b. **Burning Vapor.** Under certain conditions, gasoline or gasoline vapor will burn freely and without explosion if ignited immediately after it is spilled and before there is time for the formation of more than a small volume of explosive vapor.

c. **Heating Container.** A fire on or near a container of gasoline having a restricted opening may generate enough heat to vaporize the gasoline too rapidly for an explosion to occur inside the container. The vapor thus generated will issue from the opening at a high rate and burn as it mixes with the air. However, if the opening is too small, the vapor pressure may build up and burst the container.

2. Behavior of Gasoline Vapor

a. **Dangerous Quantities of Vapor.** Gasoline vapor is heavier than air, and the highest percentage of vapor in air will be found near the bottom of the storage space; however the vapor will gradually spread throughout the whole space. It should be recognized that, due to the difficulty of preventing small leaks, danger from sparks or flame is always present wherever gasoline is used or stored. It is, therefore, of the utmost importance to prevent the accumulation of the vapor in dangerous quantities; this can usually be done by proper ventilation.

b. **Vapor Movement.** A dangerous feature of gasoline vapor is that it may travel along a current of air for a considerable distance and then be ignited, the flash traveling back to the source of supply and causing an explosion or fire at some distance from the spark or flame. In this connection, wherever gasoline enters a pipe or drain line, it shall be thoroughly flushed immediately with a hose from the fire main.

c. **Connected Spaces.** When a space in which gasoline is left is connected as by an open pipe or drain, with other spaces, gasoline vapor may work its way to them. In such connecting spaces, therefore, there is a danger that gasoline vapor may be present which may be ignited by any source of spark or flame.

3. Handling Portable Containers

a. **Designated Use.** Gasoline containers shall *not* be used as containers for other

materials unless they have been previously surveyed and assigned to such materials and so marked.

b. Foreign Substances. Care shall be taken that no dirt, water, or other foreign matter is allowed to get into gasoline containers.

c. Rough Treatment. Gasoline drums are normally subject to hard usage and care shall be exercised that they are not abused. They shall not be struck together or against a structure in such a way as to cause sparks.

4. **Issue.** All issues of gasoline shall be made under the supervision of a reliable man who shall remain in charge until all containers are securely closed and who shall see that all safety precautions are carried out and that all chances of fire are eliminated. Drums shall be periodically inspected thereafter for leaks at bungs and chimes, and plugs tightened using a new gasket if necessary. A nonsparking metal faucet installed in a drum will be considered as fulfilling the requirements of a plug.

5. **Leaky Containers**

a. Detection. Inspect for leaky containers, and if any are found, immediately transfer the contents to a tight container and clear the leaking one of any vapor. Defective gaskets and plugs should be replaced.

b. Cleaning Faulty Tanks. Water shall not ordinarily be introduced into a gasoline drum, but if a leaky container cannot be made tight by tightening the filling and vent plugs, the drum shall first be filled to overflowing with water, and then emptied and blown through with a steam jet to eliminate any vapor present.

c. Disposition of Defective Containers. Defective containers, *after* they have been vapor-freed, shall be returned to a distribution depot for repairs. Repairs, especially those involving HOT WORK shall NOT be made by the unauthorized personnel except in case of emergency, and then not until the container has been vapor-freed.

6. **Empty Containers.** The containers shall be inspected after emptying to insure that all gasoline has been drawn off and then closed by tightening the filling and vent plugs, keeping gaskets in place. Empty containers shall be inspected before shipment for ruptured seams and punctures.

7. **Handling Bulk Gasoline**

a. Use of Hose. When gasoline is received in bulk, as in aircraft carriers, tenders, supply ships, or at shore stations, it shall be received by hose from the source of delivery.

b. Loading Tankers. During loading of tankers the covers of cargo tanks shall be closed but not clamped. Each tank as filled should be carefully watched, and when cargo enters expansion tanks, loading should be slowed down to guard against overflow. Gasoline should be loaded entirely through the piping. It should not be poured by hose into the hatch. Hatches and ullage plates should be secured after loading is completed.

c. Insulated Cable. Before connecting hose, an insulated copper cable, at least No. 4 U. S. gage, shall be connected between the source of supply and the receiving inlet, with sufficient slack in the wire to prevent tension.

d. Safety Switch. The cable shall remain in place until the hose is removed, and a single-pole electric ground safety switch shall be provided for easy operation at some distance from either end of the hose, insuring that no spark will occur except in the switch, which should not be opened when the hose is in place.

e. Fire Protection. A method of positive communication shall be established between fueling control points and the tanks being filled. When fueling aircraft or vehicles, or filling containers, a CO_2 portable fire extinguisher shall be at hand. Spilled fuel shall immediately be swabbed up or flushed off with water.

8. **Electrical Bonding.** Electrical bonding wires are fabricated into the hose wall to ground the hose terminals. The No. 4 gage cable is also connected to these hose terminals as added precaution to guard against the accidental failure of the hose and hose wire under excessive stress. Failure of the

hose wire might give a spark which could ignite the gasoline flowing from the break in the hose. This spark is avoided by the use of the alternate ground wire, which is long enough to remain intact when beyond the point at which the hose would fail. Some ships are equipped with quick release hose couplings to avoid hose breakage under these circumstances, but the alternate ground wire is still essential.

9. **Naked Lights in Vicinity.** Smoking shall not be allowed and non-approved machinery shall not be operated in the vicinity of gasoline tanks or filling connections.

10. **Filling Tanks.** In filling gasoline tanks:

a. Do not vent through manhole or into interior space.

b. Close hatches and ports in the vicinity of outboard vents.

c. Ventilate interior spaces thoroughly after tanks are filled and secured.

11. **Draining of Hose**

When loading or delivery has been completed and the proper valves closed, gasoline remaining in the piping above the tanks should be drained into the tanks by drawing off water from the water side of the system where provision is made for this method of draining. Where the above provision is not made or where the slope of the piping is such that all of the gasoline in this piping and hose does not drain back into the tank, gasoline remaining in the piping and hose is drained into containers which can be closed and sealed. After using, gasoline hose should be carefully drained of all gasoline.

12. **Large Gasoline Leaks**

a. In cases of emergency, where it is impracticable to apply measures for optimum ventilation, whether due to lack of facilities for ventilation, or excessive accumulation of gasoline and gasoline vapor, the most drastic precautions should be exercised along the following lines:

(1) Remove all personnel from the contaminated spaces. Post a sentry to warn off personnel, and eliminate possible sources of ignition in the area until the regular fire and repair parties arrive.

(2) Stop all electrical machinery (except explosion-proof inclosed motors), turn off all electronic transmitting equipment and turn off all electric lights (except explosion-proof type) both in the compartment and in immediately adjacent passageways through which air currents might pass from the compartment containing gasoline. Do not operate switches and electric controllers inside these vapor filled compartments. Open the circuits at control stations outside of compartments affected.

(3) Exercise all possible precautions to prevent accidental sparking from either electrical or mechanical sources, both in the compartment and in passageways immediately adjacent. See Chapter 15 for possible hazards due to operation of electronic transmitting equipment.

(4) Close and if necessary seal the compartment. Efficient rescue breathing apparatus shall be used by competent personnel entering the compartment; only explosion-proof lights should be used. Footgear and implements used by personnel entering the compartment shall be of such character as to eliminate the risk of striking sparks.

(5) The outer boundaries of the affected compartment should be kept under observation for gasoline leakage. Such boundaries may not be tight against gasoline, and the precautionary steps mentioned above may have to be repeated for adjacent compartments.

(6) Use a portable combustible-gas indicator for positive determination of the existence of gasoline vapor when there is any possibility of suspicion that such vapors may exist in a compartment. *Do not rely upon your sense of smell.*

(7) Do not undertake any repairs to or in such compartments until it is practicable to take the precautions specified in welding and allied processes (see articles 1054 and 2070-2080).

2022. JP-5 FUEL

1. **Characteristics.** Several types of special fuels were developed for jet engine propulsion. These are commonly known as JP fuels. The JP fuels used by the military services are procured under military specifications. They are all composed of hydrocarbons, with additions of chemical agents as required. The most widely used, because of its low hazard characteristics, is JP-5. JP-5, procured under MIL-J-5624, is a high flash point kerosene-type fuel with a vapor pressure about zero psi. The flash point is specified to be a minimum of 140° F. Since the REID vapor pressure of JP-5 is so low, the vapor-air mixture in tanks above the liquid surface will be too lean, under normal conditions, to be easily ignited. Because of this and because the fuel has a relatively high flash point, the fuel is authorized for use in ships since it presents a relatively negligible fire and explosion hazard when normal precautionary measures are employed in storage and handling.

2. **Health Hazards.** See Article 2020.

LIQUID PROPELLANTS AND OXIDIZERS

2030. CHARACTERISTICS AND PRECAUTIONS

The physical and chemical properties and the safety precautions and health hazards pertaining to the use and storage of missile liquid propellants are to be found in the publication: *The Handling and Storage of Liquid Propellants*, Office of the Director of Defense Research and Engineering (obtainable from the Government Printing Office), and *Ordnance Manual*, NAVWEPS OP-3199.

COAL

2035. HANDLING

1. **Railroad Cars**

a. A safety wrench should be in the possession of every worker on coal unloading operations to open hopper bottom railroad cars. These wrenches have handles of sufficient length to provide ample leverage, while the ratchet is so designed as to prevent spinning. Care should be exercised so that the wrench handle is straight at all times, as a bent bar will slip sideways. A safety disc should be used between the wrench handle and the car to prevent injury to the hands of workmen.

b. Extreme care should be exercised by men when entering coal cars during unloading operations to prevent being caught in the slide of the coal and injured or suffocated.

c. When men are engaged in discharging coal cars, blue flags shall be placed near the car or attached to the car track to prevent the possibility of a switching engine moving the car without notice.

d. The use of a shovel, tool, or bar with a broad flat blade and a handle approximately eight feet in length is necessary equipment for safely removing wet coal from the sides of the cars. An extension pipe with an inserted handle attached to a steam hose should be used to free frozen coal from cars whenever thawing sheds or other automatic equipment is not available.

2. **Coal Bins**

a. **Ventilation.** There should be adequate ventilation for coal bins. Coal bins (especially those used in storing pulverized coal) should be located as far as possible from any source of flame or heat.

b. **Crushers.** If coal crushers are used all equipment should be guarded and the crusher bins should be properly lighted and drained.

3. **Machinery.** When using coal unloaders, stackers, cranes, and other handling machinery, care should be taken to keep away from moving parts and such parts should be properly safeguarded. No repairs should be made while machinery is in operation.

2036. DANGER OF SPONTANEOUS IGNITION

1. **Storage Areas.** The storage area should be centrally situated on high ground, suitably graded, drained, and surfaced. The storage space should be free from all foreign matter such as leaves, grass, weeds, metal, papers, rags, oil, waste, and piles of wood, and if possible it should have concrete or other hard surface base.

2. **Bituminous Coal Storage**

a. **Layers.** Bituminous coal should be stored in layers of about three feet in thickness. Each layer should be spread evenly and rolled down with a bulldozer. Generally, piles should not exceed 18 feet in height.

b. **Firing Characteristics.** Coal susceptible to spontaneous ignition should be subjected to the layer and rolling process, but piles should not exceed 16 feet in height.

c. Sub-Bituminous coals ignite spontaneously very readily and should not be stored.

3. **Inspection.** Coal piles should be inspected frequently to detect smoke, odor of coal gas, or other indications of heating. Also temperatures of piles should be determined by placing pipes, which are closed and pointed at one end, into the pile to a depth of 6 feet and about 15 feet apart, and inserting thermometers to the bottom of the pipe by the use of strings. If the temperature at any point reaches 180°F. or over, the situation is dangerous and the coal where this temperature prevails should be promptly used in the boilers or turned over.

4. **Extinguishing Coal Fire.** When smouldering or fire has developed in a coal pile, the coal must be promptly used or dug out and spread in thin layers on the ground away from the main pile. Water is not effective and should not be used in an effort to put out a fire in a coal pile.

5. **Anthracite Storage.** Anthracite will not ignite spontaneously and no special precautionary measures are necessary in the storage of anthracite. Ordinarily coal with from 1 percent to 2 percent sulphur will not fire readily and can be safely stored. However, coals containing 2 percent or more of sulphur will ignite more readily and require special precautionary measures in storing.

6. **Additional Information.** If the safe storage and handling of coal presents any particular problems, communicate directly with the Fuel Division, Bureau of Supplies and Accounts, Navy Department, Washington, D. C. 20360 for information.

COMPRESSED GASES AND CYLINDERS

2040. SCOPE

1. **Application.** The instructions in this chapter apply to compressed or liquefied gases used by Navy installations. Cylinders shall be fabricated and tested under Interstate Commerce Commission regulations. The instructions also apply to valves and auxiliary equipment such as safety devices, cylinder caps, etc. Strict compliance with the precautions prescribed in this chapter will prevent many of the accidents which result from misapplication, mishandling, or improper identification of industrial gases and cylinders in the naval service. For instructions

covering specific applications of these gases and cylinders, such as oxygen and acetylene used in welding and cutting, see Chapter 10.

2. **Emergencies.** Due allowance should be made for the hazards which may be peculiar or incident to local conditions of handling, stowage, and use. Where such conditional hazards are met or noted in the course of operations, they should be reported to the cognizant bureau for dissemination to other commands.

3. **Medical Instruction.** Where reference is made to first aid for personnel exposed to gas fumes, it should not be assumed that every acceptable procedure is included, or that the services of medical officers are unnecessary. The instructions of medical officers, if available, shall be followed in every case.

2041. VALVE SAFETY DEVICES

Military specifications and Interstate Commerce Commission regulations require that valves designed for certain services be fitted with safety devices as a safeguard against the building up of hazardous pressures within cylinders from exposure to heat, or from overcharging, etc. In general these safety devices may be divided into four categories based on functional design.

1. **Fusible Plugs.** A fusible plug may be described as a threaded hex head plug, the center of which is filled with fusible metal. When the cylinder is subjected to high temperatures, the fusible metal melts, permitting gas to escape through the channel previously filled with fusible metal. This type of device is used on chlorine, Freon, acetylene, etc.

2. **Spring-Loaded Safety Device.** Spring-loaded safety devices usually function as "pop" valves when internal pressure in cylinders overcome spring tension, permitting escape of gas. Devices of this sort are used on liquefied petroleum gas valves, and operate generally at about 1.56 percent of the charging pressure indicated for the cylinders (Interstate Commerce Commission approved pressure).

3. **Unbacked Safety Cap with Rupture Disk.** Unbacked safety caps with rupture disks consist essentially of a safety cap covering a safety port in the valves. The cap retains a disk firmly over the safety port. Under excessive pressure (2,600-3,000 p. s. i.) the safety disk ruptures and allows the gas in the cylinder to vent to atmosphere. This type of safety device is used in carbon dioxide service.

4. **Backed Safety Cap With Rupture Disk.** Backed safety caps with rupture disks are essentially the same as described in paragraph 3 above, except that the disk is supported by fusible metal contained in the safety caps and blocking off escape ports. In practice, where the cylinders, valves, and, of course, the fusible metals are heated above the melting temperature, and the pressure within the cylinders then is or thereafter approaches 2,600-3,000 p. s. i., the disk ruptures and reduces the pressure. This type of device is used commonly on air, helium, hydrogen, nitrogen, and oxygen valves.

5. **Tampering.** Do not tamper with the safety devices on valves or cylinders.

6. **Striking.** Never hammer or strike the valve wheel in attempting to open or close valves. Use only wrenches or tools provided and approved for this purpose.

7. **Connections.** Be sure that the threads on regulators or other auxiliary equipment are the same as those on cylinder valve outlets. Never force connections that do not fit.

8. **Ice Clogged Outlets.** In the event that valve outlets have become clogged with ice and it becomes necessary to thaw them out, use warm, not boiling water. Boiling water will melt fusible plugs and vent cylinders.

2042. PAINTING

1. **Frequency.** It shall be the responsibility of all commands to repaint cylinders to minimize external corrosion. Repainting shall be done no oftener than is considered necessary for preservation. Navy standard

paints are formulated to withstand scrubbing and fading, so that touch-up patch painting is not too obvious. Therefore, touching up rather than complete repainting shall be done when practicable. Repainting in lieu of cleaning must never be permitted.

2. **Color.** It is also required that each cylinder be identified, with respect to gases or fluids contained therein, by the color of the paints applied for preservation. The colors shall be in accordance with *Military Standard Color Code for Pipelines and for Compressed Gas Cylinders*, MIL - STD - 101.

2043. REPAIRING CYLINDERS AND VALVES

1. **Maintenance.** Cylinders shall be repaired only by personnel who are specifically authorized to perform such work. To assure that all cylinders are in satisfactory and serviceable condition, periodic inspections should be made; cylinders found with any of the following defects should be drained and purged of gas and turned into the nearest naval supply point, in exchange for other cylinders:

a. Severely dented, gouged, or corroded.

b. Evidence of fire damage (carbon deposits on valves or safety plugs of cylinders containing acetylene or other flammable gases).

c. Bulges (deformation of cylinders from internal pressures).

d. Damaged, split, or leaking seams (low-pressure cylinders containing flammable gases such as acetylene, etc.).

2. **Valves.** In general, cylinders with leaking or defective valves (stripped threads, bent stems, etc.) shall be turned in to the nearest naval supply point for overhaul. Leakage from valves may be caused by the presence of dirt or foreign particles in the valves or the valve seat. The leakage may sometimes be corrected by partially opening and then closing the valve, to blow out the foreign material. If the leakage continues, the cylinders should be removed to a safe place (in the open if possible) and drained by opening the valve. The cylinders should then be tagged and turned in for overhaul and recharging.

3. **Draining Cylinders.** Cylinders containing combustible or toxic gases (acetylene, hydrogen, chlorine, etc.) should be drained through pressure regulators and their rates of discharge controlled so that dangerous accumulations of these gases will not occur.

4. **Toxic Gases.** The utmost caution should be exercised in draining cylinders containing chlorine, sulphur dioxide, anhydrous ammonia, and other toxic or irritant gases. Cylinders containing these gases should be discharged to atmosphere only under conditions assuring the prompt dispersal of these gases without hazard to personnel or property. Personnel engaged in draining these cylinders should be equipped with the necessary protective clothing, goggles, and respirators.

2044. CARE AND TESTING OF CYLINDERS

1. **Quinquennial Tests.** Interstate Commerce Commission regulations require that practically all cylinders with the exception of those containing acetylene be retested every five years. Regulations specify that cylinders for which prescribed retests have become due must not be charged and shipped until such retests have been properly made. However, cylinders which have been charged prior to the expiration of their retest period are satisfactory for shipment and use subsequent to the date of expiration.

2. **Refilling.** Do not refill cylinders unless such action is specifically approved by the bureau concerned and then only in accordance with instructions.

3. **Designated Gas.** Do not fill any cylinder with a gas other than that gas for which the cylinder has been specifically designated. Explosive mixtures may readily be formed when cylinders containing residual combustible gases such as hydrogen, propane, or acetylene are charged with air or oxygen. The reverse of this procedure is equally hazardous.

4. **Changing Markings.** Do not remove or change the numbers of marks stamped into cylinders without the specific approval of the cognizant bureau or Supply Demand Control Point.

5. **Improper Marking.** Do not use any gas cylinder which is improperly marked (color of paints, name or gas stenciled on cylinder and valve, etc.). Return all such cylinders to the nearest naval supply depot.

6. **Specific Use.** Never use cylinders for rollers, supports, or for any purpose other than to carry gas.

7. **Regulators.** Do not use regulators, pressure gages, manifolds, and related equipment which are provided for a particular gas on cylinders containing different gases.

8. **Protection From Heat.** Do not subject compressed gas cylinders, either in storage or in service, to a temperature in excess of 130°F. A direct flame should never be permitted to come in contact with any part of a compressed gas cylinder.

9. **Protection From Abrasion.** Be careful to protect cylinders from objects that will produce a cut or other abrasion in the surface of the metal.

10. **Testing for Leaks.** When testing for leakage from gas cylinders, use soapy water. Keep the scene of operations well clear of open flames and other sources of potential ignition, such as unshielded lamps, switches, etc.

2045. STORAGE AND HANDLING

1. **Definitions**

a. **Storage.** As used herein, the term "storage" refers to articles under the cognizance of the supply officer, in general stores, to be drawn on for the activity's own use; or articles of cargo being transported. It does not refer to articles removed from stores or cargo and transferred to shops or other locations for use.

b. **Ready Service.** The term "ready service" means articles that have been transferred from store and are physically located in a shop or elsewhere, regardless of whether they are actively being used at a given moment or are being held in reserve in the interim between periods of actual use or in anticipation of a need for immediate use.

2. **Handling Cylinders**

a. **Handle With Care.** Cylinders that contain flammable and/or explosive gases shall be handled with particular care. Every effort should be made to avoid their being dropped or allowed to strike forcefully against each other or any other object. Every precaution shall be taken to prevent bumping or striking the discharge valves during handling operations.

b. **Caps in Place.** The cylinder valve outlet cap and the cylinder valve protecting cap shall both be in place when cylinders are being handled. Unless ready service cylinders are secured in a special portable rack, regulators shall be removed and caps replaced before the cylinders are moved to a new location.

c. **Transporting Cylinders.** When loading or transferring cylinders, especially when using a crane or derrick, the cylinders shall be secured in a cradle, suitable platform, rack, or special container. Neither a sling (line or chain) nor electromagnets shall ever be used. A cylinder moved by hand should be tilted slightly and rolled on its bottom edge, without dragging or sliding. Hooks or lines through valve protection cap shall not be used for hoisting cylinders.

d. **Hand Trucks.** When cylinders are transported by hand truck, they shall be securely held in position by chains, steel strapping or other means that will prevent falling from the truck.

(1) Hand trucks used by welders for holding cylinders of welding gases shall conform in general to the requirements of *Specification Mil-T-19259, Truck, Hand 2 Wheel, Welding Cylinder Rack, Double Handle Type, Solid Rubber Tires.*

2046. STORAGE OF COMPRESSED GASES

The provisions of NAVSANDA Pub 284, (NAVMC 1101), *Storage and Materials Han-*

dling, and the following precautions shall be observed in storing compressed gases:

1. **Separating Flammable and Oxidizing Gases.** Combustible gases shall never be stored with oxidizing gases. A fire wall shall separate such storage spaces. However, the inert gases such as helium, nitrogen, carbon dioxide, or argon may be stored with either flammable or oxidizing gases. Typical oxidizing gases are oxygen and chlorine.

2. **Fire Apparatus and Oxygen Tanks.** Fire extinguishers employing gases, cylinders permanently connected to fixed fire-extinguishing systems, and gases and canisters for oxygen-breathing apparatus may be stored in the vicinity in which they are used.

3. **Temperature.** Necessary steps shall be taken to prevent the maximum temperature in storage spaces from exceeding 130°F.

4. **Ventilation.** Cylinders shall be stored in well ventilated spaces provided with forced draft if necessary.

5. **With Combustibles.** Other flammable or combustible materials shall be kept out of storage spaces. In particular, oxygen cylinders shall not be stored near combustible materials, especially oil and grease.

6. **Acetylene Cylinders.** Acetylene cylinders shall be stored with valve end up.

7. **Exterior Storage.** Cylinders stored in the open should be protected from extremes of weather and should be screened against direct sunlight in localities where extreme temperatures prevail. Cylinders in open winter storage should be protected from accumulations of ice and snow. Any thawing of ice around cylinders or cylinder valves shall be done with warm (not boiling) water.

8. **Corrosion.** Steps shall be taken to prevent corrosion of the threaded connections of cylinders, which have been in storage for extended periods of time. The use of grease or flammable corrosion inhibitors on oxygen cylinders is not permitted.

2047. TOXIC HAZARDS

1. **Leaking Cylinders.** Particular attention should be given to location of cylinder storage to prevent entrance of fumes from leaking cylinders into ventilating air intakes leading to spaces where personnel may be affected or where flammable gases may cause explosion.

2. **Chlorine and Ammonia.** Chlorine and ammonia are toxic and may produce fatal results if inhaled in large quantities. In small quantities, they are irritants and cause acute distress by attacking the lung tissue.

3. **Inert Gases.** Helium, nitrogen, carbon dioxide, and argon are nonflammable gases and may be stowed with flammable gases. Although the inert characteristics of these gases are a fire protection, they will not support respiration, and sufficient concentration in a closed space will cause asphyxiation. Aerosol insecticide and carboxide are also nonflammable; however, where concentrations are present these gases are toxic. Freon likewise is nonflammable but in the presence of fire or red hot metal will decompose into phosgene gas, which is toxic.

2048. EMPTY CYLINDERS

1. **Pressure.** Though empty cylinders, with valves securely closed and valve protection caps in place, are comparatively less hazardous than full cylinders insofar as storage is concerned, the former shall be handled and stored with the same precautions as used with full cylinders. This is important since cylinders of some gases are not to be completely exhausted but should be considered empty when the gas pressure falls to about 25 p.s.i. gage.

2. **Labeling.** Empty cylinders should be tagged as "Empty" and segregated from full cylinders.

3. **Valves Closed.** Valves should be tightly closed and valve protection caps se-

564-350 O - 74 - 22

curely fastened to assure the return of empty cylinders in good condition to the suppliers.

4. **Rotation of Cylinders.** Full cylinders should be used in rotation, as received from the source of supply.

5. **Disposition.** Empty cylinders should be delivered to the nearest naval supply depot with valves closed and under some positive pressure, except where the design of the valve does not permit closing, as is the case with fire extinguishers. This is necessary to prevent condensation of atmospheric moisture in cylinders, and in the case of acetylene cylinders to prevent loss of the solvent (acetone) and/or entry of air should the cylinders cool considerably below the temperature at which they were discharged.

6. **Drying of Cylinders.** Cylinders used for aviators' breathing oxygen, dry oxygen, dry nitrogen, dry argon, dry helium, or dry air, which are found to have open valves and/or a positive internal pressure of less than 25 p. s. i. gage, should be tagged "Dry Before Refilling."

2049. SPECIFIC COMPRESSED GASES

1. **Acetylene.** See Chapter 10 for description of hazards and safety precautions.

2. **Carbon Dioxide.**

a. Carbon Dioxide is a dangerous asphyxiant because it is not detectable by ordor or by color when present in hazardous quantities. It is heavier than air and gives little if any warning to personnel exposed to it until they are completely overcome. The inhalation of carbon dioxide will produce various effects, depending on the length of time it is inhaled.

b. The treatment of exposed personnel consists of artificial resuscitation, administering oxygen, and keeping the patient warm and quiet.

c. Do not enter an area or compartment containing hazardous amounts of carbon dioxide without being equipped with a breathing mask and an independent supply of oxygen or a supplied-air respirator. If this is not practicable and the case is extremely urgent, enter only when equipped with lifelines and with assistants standing by outside the area or compartment. Stay time in the contaminated area should be restricted to a minimum.

3. **Chlorine**

a. Chlorine should be used only by experienced and properly trained personnel. Where chlorine is used, good ventilation should be maintained and exposed personnel should be furnished with gas mask approved for protection against chlorine.

b. Where necessary, the presence of chlorine may be detected by using a cloth wet with aqua ammonia. Ammonia in the presence of chlorine produces white fumes.

c. If it is necessary to immerse chloine cylinders in a bath of warm water to facilitate discharge, extreme care must be taken not to generate a dangerous pressure in the cylinders. Care should also be taken to maintain the temperature of the water below 130°F. in view of the low melting point of the fusible plugs. In no event should the cylinder valve be submerged nor more than 20 percent of the surface area of the cylinder be under water.

d. **Treatment When Exposed:**

(1) Call Medical Officer. If breathing is impaired or has ceased, start administering mouth-to-mouth resusitation immediately. Patient should be removed to open air or to a space where air is not contaminated. CAUTION: RESTORING THE PATIENT'S BREATHING IS THE MOST IMPORTANT DUTY OF THE RESCUE TEAM.

(2) Administer oxygen if available. This should be done under the supervision of persons qualified to administer.

(3) Keep patient warm and quiet; cover with blankets if available. Rest is essential. Place patient on back with head and chest elevated.

(4) Splashes of liquid chlorine or chlorinated water on skin may cause skin irritation or acid burns. Remove clothing immediately and wash the affected area with large amounts of water.

4. **Anhydrous Ammonia.** Ammonia is used principally as a refrigerant. Should it become necessary to withdraw ammonia from

refrigerating systems into cylinders, care should be taken to avoid overcharging of such cylinders. Only empty ammonia cylinders should be used for this purpose, and in order to insure that they are empty, their valves should be open and the cylinder vented (in the open) for a few minutes. Prior to attaching the cylinders to systems which are to be emptied, they should be carefully weighed and the tare weights (empty weight) noted. The cylinders may then be connected to refrigeration systems for filling, but should be weighed from time to time while filling in order that not more than the appropriate weight (50 to 100 pounds) of gas be charged in the 50- or 100-pound cylinders. If any cylinder be accidentally overfilled, the excess gas should be discharged slowly into water, preferably in the open, where any escaping gas vents to atmosphere.

a. Labeling Empty Cylinders. When cylinders that are used to store ammonia withdrawn from refrigeration systems are later returned to supply depots for refilling, they should be tagged with the explanation that the cylinders were so used.

b. Treatment When Exposed

(1) Artificial respiration. Summon the medical officer promptly. If the patient is unconscious, apply artificial respiration.

(2) Eyes. If the eyes are affected, and the medical officer is not promptly available, hold the lids open and pour water or a 2 percent boric acid solution over the eyeballs and lids, washing thoroughly; then apply two drops of liquid petrolatum.

(3) Skin. If the skin is affected, strip the ammonia-saturated clothing from the patient. Wash affected areas with water, then paint burned surfaces with a saturated solution of picric acid; use boric acid near the eyes. Do not cover burns with clothing or dressings without the approval of the medical officer.

(4) Nose and throat. If the nose and throat are affected, irrigate and spray nostrils with a saline if available; if not, plain water is satisfactory. Encourage patient to drink large amounts of water.

(5) Breathing fumes. Ammonia gas is lighter than air. Therefore, in going to the rescue of one overcome by ammonia, keep as near to the deck or floor as possible; and if a gas mask is not available, keep a wet cloth or sponge over the mouth and nostrils.

5. Freon

a. Handling Cylinders. Freon is used as a refrigerant and cylinders containing this gas are subject to the same handling and refilling rules as are given for ammonia cylinders, except that standard Freon cylinders are of 10- and 50-pound capacity.

b. Treatment When Exposed.

(1) Goggles. Personnel with the duty of servicing refrigeration systems with Freon should be furnished with safety goggles to eliminate the possibility of liquid Freon coming in contact with the eyes and causing injury due to the freezing effect of the liquid.

(2) Artificial respiration. Should personnel be overcome due to lack of oxygen in working spaces because of high concentrations of Freon gas being present, such personnel should be given artificial respiration as in the case of suffocation.

6. Combustible Gases (Liquid Petroleum Gas, Hydrogen Methyl Chloride, Etc.). The same safety rules apply to combustible gases as are outlined for acetylene in Chapter 10, except that these gases are stable and no hazard is attached to their use at pressures above 15 p. s. i. gage.

7. Oxygen. See Chapter 10 for description of hazards and safety precautions.

SOLVENTS

2055. GENERAL

The variety of solvents used in compounds or formulations such as paints, adhesives, rubber and plastic materials, and in degreasing solutions pose a problem with respect to the possible hazards attendant to

their use. Under certain conditions all organic solvents are toxic in varying degrees and, with the exception of chlorinated solvents, they are flammable. Depending upon the extent and conditions of their use in any particular operation either independently or as principal ingredients in various mixtures, appropriate measures should be taken to minimize their toxic and flammable effects. Exposure of the skin to solvents can cause dermatitis and personnel involved in operations requiring frequent or prolonged contact with solvents should wear solvent resistant gloves. Organic solvents can be broadly classified according to their chemical structure:

Aliphatic hydrocarbons or petroleum type solvents of which Stoddard solvent and mineral spirits paint thinner are examples,

Aromatic hydrocarbons such as benzene and toluene,

Halogenated hydrocarbons which are usually chlorinated aliphatic hydrocarbons such as carbon tetrachloride and methyl chloroform,

Alcohols, methyl alcohol and ethyl alcohol being the principal solvents in this class,

Ketones such as acetone and methyl ethyl ketone, and

Esters which are represented principally by ethyl acetate and amyl acetate.

1. **Aliphatic Hydrocarbons.**

a. Stoddard Solvent. Stoddard solvent has a low order of toxicity and may in many instances be used as a general purpose solvent or cleaner or as a substitute for the more toxic chlorinated solvents. Although its flash point is above 100 °F., it is flammable and appropriate precautions should be taken to minimize the fire hazard. Standard stock *mineral spirits* paint thinner and *dry cleaning solvent* are similar to Stoddard solvent in fire and toxic properties.

b. Petroleum Naphtha. Petroleum (aliphatic) naphtha, sometimes called petroleum ether, also has a low order of toxicity but it is considerably more flammable than the Stoddard-type solvents, its flash point being 0 °F. or below.

2. **Aromatic Hydrocarbons**

a. Benzene. Benzene, also called benzol, is one of the most toxic solvents and is also quite flammable, having a flash point of 12°F. Because of its low threshold limit (25 p. p. m.), its acute narcotic and severe to fatal nervous system effects, and of its chronic effects (particularly aplastic anemia), benzene is classed as a poison and its use should be prohibited or at least severely restricted. Although benzene is being used less frequently as a solvent in proprietary compounds, the possibility of its use in rubber and plastic cements, paint removers, and in some lacquers or dopes shall be recognized. Other less toxic aromatic or chlorinated solvents can in most cases be used satisfactorily as substitutes for benzene.

b. Toluene and Xylene. Toluene (toluol) and xylene are classed as flammable liquids and their vapors are considered toxic. Any operations involving these solvents should be surveyed for possible health and fire hazards. Many types of paints, enamels, lacquers, and adhesives are likely to cont one or both of these compounds as thinne

c. Aromatic Naphtha. Aromatic naphtha (V. M. & P or coal tar naphtha) contains a high proportion of aromatic hydrocarbons and, therefore, has toxicity and flammability properties comparable to the pure aromatics for which it is used as a substitute in many formulations.

3. **Halogenated Hydrocarbons.**

a. General. Solvents in this class are generally considered nonflammable. For this reason and also because of their high volatility and generally good solvent action on a variety of organic compounds, they are widely used for the removal of oil and grease, paint stripping, and general cleaning. Some are poisonous, all are toxic and are narcotic and anesthetic agents, producing deep anesthesia and even death under prolonged exposure to excessive concentrations. High intensity ultra-violet light and heat decompose chlorinated hydrocarbon vapors into highly toxic compounds such as phosgene (see 1039.1). The following precautions should be exercised in using chlorinated solvents:

(1) The use of comparatively large quantities of chlorinated solvents for cleaning up oil and grease on floors or in bilges should be prohibited. Less toxic high-flash aliphatic solvents or emulsifying-type cleaners, such as the standard stock tank and bilge cleaner (FSC 6850), should be used for gross oil and grease clean-up jobs.

(2) Sufficient forced ventilation to insure safe concentrations of solvent vapor in the workroom should be provided where regular chlorinated solvent processes (such as degreasers) are installed.

(3) Skin contact with chlorinated solvents should be avoided.

(4) Use of chlorinated solvents for fabric and upholstery cleaning shall be prohibited.

b. Principal Halogenated Solvents.

(1) Carbon tetrachloride. Carbon tetrachloride is one of the most toxic solvents. It has caused more deaths and injuries that any of the others. The Chief of Naval Operations has prohibited the use of carbon tetrachloride for any purpose, including fire fighting, unless specifically authorized by the cognizant bureau or office. It is important to note that the minimum concentration which can be detected by odor is about five times its threshold limit value (10 p. p. m.). A much less toxic solvent, (see below), can be substituted for carbon tetrachloride in most applications.

(2) Methyl Choroform (1, 1, 1 - trichloroethane). Although methyl chloroform is considerably less toxic than carbon tetrachloride and is usually prescribed as a substitute, it must be recognized that it is toxic and should be handled in accordance with the precautions generally applicable to chlorinated hydrocarbons (see article 2055.3a). Because of its corrosive action on metals, particularly on aluminum, most methyl chloroform formulations contain an inhibitor which in itself is flammable; therefore, after about 90 percent evaporation of the inhibited solvent, the residue contains a high percentage of flammable inhibitor.

(3) Trichloroethylene and Perchloroethylene. These solvents are moderately toxic and are used extensively in vapor-phase degreasers. The degreasers should be frequently inspected for effective operation of the ventilating system, safety thermostats, and temperature indicators.

(4) Chlorobenzene. Although not commonly used as a solvent, chlorobenzene is occasionally used as such and may be found in carbon removing formulations. It is quite toxic and, unlike most chlorinated hydrocarbons it is classed as a *flammable liquid.* Dichlorobenzene and trichlorobenzene are used in similar formulations, and their toxicities are comparable to that of the monosolvent but are somewhat less flammable.

4. **Alcohols.** As a class, alcohols are moderately toxic in the vapor state and possess only mild narcotic properties. All of those mentioned below are classed as flammable liquids and are therefore fire hazards.

a. Methyl Alcohol. Methyl alcohol (methanol or wood alcohol) is used as a general solvent and is found in some varnishes, lacquers, shellacs, and paint removers and also as a non-permanent anti-freeze water additive. Compared to the solvents previously mentioned, its vapors are not highly toxic. However, ingestion of methanol can be and has been fatal and for this reason it is rated as a poison. Because of the probability of mistakenly consuming methyl alcohol for the desired effects of ethyl alcohol, containers should be conspicuously marked with *Poison* labels.

b. Ethyl Alcohol. Ethyl alcohol (ethanol) is also used as a general solvent. The effects of ethanol ingestion are well known. Industrial ethanol is denatured to render it unpalatable. Its vapors are of a low order of toxicity the inhalation of which produce the same symptoms as those produced by ingestion.

c. Butyl Alcohol. Butyl alcohol (butanol) is used as a lacquer solvent. Its vapors are very irritating to the eye, even at concentrations below its threshold limit value, and are appreciably more toxic than the alcohols mentioned above, liver damage and blood changes being the possible health effects.

5. **Ketones.** The ketones are general purpose solvents for organic materials and are used as solvents in some paint, enamel, varnish, lacquer, and other organic coating formulations. Acetone, methyl ethyl ketone and methyl isobutyl ketone are the most widely used ketones. All are classed as flammable liquids, acetone being the most highly flammable of the group. Their vapors have fairly strong narcotic effects and are irritating to the respiratory tract.

6. **Esters.** As a class esters have a low order of toxicity but do produce narcosis and are irritating to the respiratory tract. The principal esters such as ethyl acetate, butyl acetate, and amyl acetate are used primarily as lacquer solvents. They are all classed as flammable liquids, ethyl acetate being the most flammable of the three.

PLASTICS

2056. GENERAL

Plastics in themselves generally pose no particular problems with respect to toxicity or flammability. However, the various compounds in which they are found, such as in coating, adhesive, and molding formulations contain other ingredients (solvents, accelerators, inhibitors, curing agents, etc.) which often introduce health and fire hazards. The presence of such hazardous materials in plastic formulations used in specific operations and procedures should be ascertained and appropriate preventive and precautionary measures taken to counteract the hazards involved. The following hazards are but representative of the more prevalent or common ones found in Navy industrial activities.

1. **Plastic Dusts.** Suspended dusts from certain powdered plastic formulations, particularly molding compounds, are explosive. Any operations involving such compounds where appreciable quantities of dust are created should be investigated for the existence of explosive conditions. For information on the explosibility of the dusts of various plastics and applicable precautions see National Fire Protection Association Standard for the Prevention of Dust Explosions in the Plastic Industry, NFPA No. 654.

2. **Epoxy Resins.** Epoxy resins are being used extensively in the form of paints, adhesives, plastic repair kits, caulking compounds, and concrete repair compounds. Use of these materials involves the mixing of two parts, one of which is an amine-type hardener or curing agent having severe irritating properties. It is very important that meticulous care be taken in the mixing and applying of epoxy materials to avoid contact with the skin:

a. Apply protective cream to exposed skin areas and to potentially exposed area even when protective clothing is worn.

b. Wear impervious gloves, sleeves, and aprons wherever feasible and faceshields if splash is likely.

c. Provide optimum ventilation. Permanent repair or layup facilities should include installation of an adequate ventilation system. Mixing should be done in the open or under an exhaust hood.

d. Immediately wash with soap and water any areas of the skin that have contacted the wet, uncured materials. Contaminated clothing should be removed at once. A daily change of clothing is advisable in full-time operations.

3. **Foamed Plastics.** Some of the numerous applications for foamed-in-place polyurethane plastics are filling voids, flotation chambers, thermal insulation and filling custom-built molds. Many such applications require that the operation be performed in confined spaces. The foaming agent, tolylene diisocyanate (TDI), is highly irritating even in very small atmospheric concentrations. Because of its strong irritating effect on the eyes and respiratory system, personnel are not likely to remain in comparatively high concentrations of TDI fumes. However, its odor is practically undetectable at its

very low threshold limit value of 0.02 p.p.m. The following precautions should be followed in operations involving both the mixing and application of foamed-in-place plastics:

a. Provide local exhaust ventilation. At low concentrations of TDI, organic vapor-type respirators may be adequate provided all personnel within the influence of the fumes are afforded such protection.

b. Wear air-supplied respirators in confined spaces where adequate exhaust ventilation is not feasible.

c. Wear chemical goggles and impervious gloves and aprons where splash or contact with the skin is likely.

d. Provide adequate ventilation or respiratory protection when welding or other heating operations are likely to burn in-place foamed plastic material.

THE METALS AND THEIR COMPOUNDS

2057. GENERAL

Any operations involving toxic metals and their compounds which produce dusts, fumes, or mists are likely to introduce health hazards and appropriate measures should be taken to avoid the exposure of personnel to hazardous concentrations. Typical operations likely to contaminate the atmosphere are: paint spraying, grinding, sanding and buffing metals and coated surfaces, foundry heats, welding and heating coated surfaces, and electroplating. The following significantly toxic metals (and their compounds) are the ones most frequently found in industrial operations.

1. **Beryllium.** Beryllium and its compounds are highly toxic causing seriously chronic-to-fatal lung diseases and dermatitis. The concentration of beryllium particulate matter in air below which it is considered to be safe is so low (2 micrograms per cubic meter of air) that the safe working level is practically zero. Therefore, any operations involving beryllium and its alloys or compounds which are likely to generate dust or fumes must be meticulously controlled and frequently monitored. Depending on their magnitude and continuity, proper control of beryllium operations may require the use of exhaust hoods at the point of operation, meticulous housekeeping practices, daily change of special work clothing, daily showers, and special precautions in disposal of waste.

2. **Cadmium.** The fumes of cadmium and its compounds, particularly cadmium oxide, are highly toxic, producing serious-to-fatal results principally from lung damage. Cadmium readily vaporizes even at temperatures below its melting point, and at the melting point its high vapor pressure can generate fume concentrations more than 5000 times the threshold limit; therefore, relatively small amounts of molten cadmium can generate harmful fume concentrations. Since the metal is widely used as a protective coating on ferrous metals, particular precautions should be taken to protect personnel engaged in welding, burning, or any heating of such metals. Cadmium is also an ingredient in several brazing alloys which readily release highly toxic fumes at the required brazing temperatures.

3. **Chromium.** The toxic action of chromium is confined to its compounds. The harmful effects are primarily irritation and ulceration of nasal passages and of the skin. Personnel engaged in such operations as the spraying and sanding of chromium pigmented paints and chromium electroplating should be provided adequate respiratory and skin protection.

4. **Lead.** The toxicity of lead is well known and is one of the most important industrial hazards among the toxic metals. Its harmful effects are broad in scope, ranging from comparatively mild stomach upsets and blood changes to disabling and fatal damage

to the nervous system. The elemental metal is found in a variety of alloys, as a compound in paints and ceramics, and as tetraethyl lead in gasoline. The principal operations producing substantial health hazards are lead alloy pouring, spraying and sanding of lead pigmented paints, and flame cutting painted steel. Tetraethyl lead, being volatile at ordinary temperatures, poses a serious health hazard in the cleaning of leaded gasoline storage tanks (see 2020.3).

5. **Mercury.** Absorption of comparatively small amounts of mercury or its compounds by ingestion or inhalation can result in acute poisoning (kidney damage) which may be fatal. Chronic poisoning resulting from long exposure is usually manifested in damage to the nervous system or by mental disturbances. One of the principal hazards in Navy industrial activities with respect to mercury is involved in the filling of mercury manometers commonly used in measuring pressures and fluid flow in various equipments and processes. The careless handling of mercury in this operation many times results in accumulations of spilled mercury on table tops, floors, etc. such that hazardous mercury vapor concentrations may develop if the space is confined and ventilation is inadequate. See article 1708.2a for appropriate precautions and decontamination procedures.

6. **Zinc.** Although zinc fumes are not highly toxic and do not appear to produce chronic symptoms or cumulative effects, the common occurrences of the annoying and sometimes disabling transient effects is worthy of mention. The welding or torch cutting of galvanized steels and casting of brass and bronze occasionally result in the occurrence of metal-fume fever (fever and chills) and any such operations should be performed with adequate ventilation or suitable respiratory protection.

DUSTS

2058. MINERAL DUSTS

Certain mineral dusts are pneumoconiosis (a pathological lung condition produced by mineral or metallic dust inhalation) producing. The most prevalent and insidious forms are silicosis and asbestosis caused by prolonged inhalation of dusts (or mists) containing silica and asbestos.

1. **Silicosis.** Silicosis has long been recognized as an occupational disease in such industries as mining and quarrying. The damage done is permanent and progressive with continued exposure. In its more advanced stages, it is evidenced by shortness of breath, decreased chest expansion, lessened capacity for work, and increased susceptibility to tuberculosis and other lung diseases. Therefore, any operations which create appreciable quantities of silica (quartz, principally) such as in sand blasting should be well ventilated and, if necessary, personnel should wear appropriate respiratory protection.

2. **Asbestosis.** Over a number of years, the inhalation of excessive asbestos dust can result in a crippling respiratory condition termed asbestosis. The most significant exposure to asbestos dust occurs during the ripout or tearout of asbestos materials aboard ship. Exposures also result during the production and installation of asbestos containing materials. The following precautions are required for the safe handling of asbestos products:

a. General precautions:

(1) The Industrial Hygiene Division of the Medical Department shall evaluate the level of asbestos exposure and will recommend engineering control measures for dust controls and provide, at least twice yearly, indoctrination of insulation workers in measures of personal protection.

(2) Asbestos dust concentrations shall be controlled so as not to exceed the threshold limit value for asbestos as stated in the current BUMED INSTRUCTION 6260.3

series titled "Threshold limit values for airborne toxic materials."

(3) Scrap material shall be wet down before shoveling, hauling or dumping.

(4) Discarded and scrapped asbestos materials shall immediately be placed in plastic bags which are then to be sealed for removal and disposal.

b. Fabrication in Shop.

(1) Shop walls, ceilings and floors shall be so designed to prevent dust accumulations and to facilitate housekeeping measures.

(2) Cutting benches shall be equipped with exhaust (down-draft or hood) ventilation.

(3) Asbestos cloth shall be moistened prior to cutting for pad fabrication and ralated production requirements.

(4) Local exhaust ventilation shall be installed on power saws and sewing machines. In addition, power saws shall be located within an enclosure provided with dilution and general exhaust ventilation. Exhaust ventilation ducts shall be connected to collectors (bag-house) for purpose of removing asbestos fibers.

(5) In-shop operations for mixing asbestos containing cements shall be accomplished with permanent exhaust ventilation equipment. In-bag mixing techniques are acceptable without the need for ventilation.

(6) Asbestos dust accumulations in insulation shops shall be avoided through scrupulous housekeeping measures. Dry sweeping methods are prohibited. It is recommended that industrial vacuum cleaners be used for daily cleanup after normal working hours. Vacuum cleaner operators shall wear dust respirators. If vacuum cleaning operations must be conducted during working hours, respirators shall be worn by all personnel exposed to the dust.

(7) All machines shall be furnished with suitable waste containers for the collection of scraps and waste to prevent the material from falling on the floors and generating dust.

c. Removal, Repair and Installation.

(1) It is mandatory that dust respirators approved by the Bureau of Mines be worn during ripout and repair operations.

(2) Personnel engaged in ripout operations will be provided and required to wear clean coveralls at the beginning of each shift. Prior to removing the dust respirator, used coveralls shall be removed. Clean or single-use coveralls shall be provided daily.

(3) Shipboard "ripout" of insulation shall be accomplished in designated exclusion areas. Only personnel whose work requires their presence shall be permitted in such areas. All personnel entering such areas shall be made aware of the hazards. Ships' force (crewmen) and others accomplishing essential duties in the removal area are required to wear approved respirators.

(4) The area in which removal takes place shall be confined by means of curtains, portable partitions, etc., to prevent excessive contamination of other areas.

(5) Portable mechanical exhaust ventilation should be used to remove airborne dust and exhausted into bags or suitable devices to collect the dust.

(6) Unpacking and application shall be accomplished in a manner that will minimize airborne dust.

(7) Hand sawing, cutting, jacket stripping, etc., shall be done in a manner that will create minimal airborne dust. Use of proper methods and tools will help considerably towards dust abatement.

(8) When working in confined spaces, portable dust collectors or exhaust blowers shall be provided to remove dust from the source. Dust will be collected in suitable collecting devices designed to prevent dispersal.

(9) Dust shall not be exhausted into other working areas.

RADIOACTIVE MATERIALS

2059. GENERAL

The precautions applicable to the use and storage of hazardous radioactive materials are adequately covered by manuals and instructions issued by the commands, bureaus, and offices of the Navy Department. For reference purposes they are listed below according to subject matter:

1. Basic Regulations.

a. *Radiation Health Protection Manual* – NAVMED P-5055.

b. *Policy Coordination of Matters Dealing with Ionizing Radiation, Radioactivity, and Nuclear Materials* – SECNAVINST 5000.11 series.

2. Radioactive By-Product Material.

a. *Accountability of Radioactive By-Product Material and Radium* – NAVSHIPSINST 5100.19 series.

3. Radiac Equipment.

a. *Radiac Equipment Containing Sealed By-Product Material Sources at Supply or End-User Activities; Procedures for Control of* – NAVSHIPSINST 9673.14 series.

b. *Radioactive By-Product Material Used in Radiac Equipment Sealed Check Sources; Conditions Governing Use of* – NAVSHIPSINST 9673.19 series.

4. Luminescent Material.

a. *Control of Contamination from Radioactive Luminescent Material* – NAVSHIPSINST 5100.6 series.

b. *Hazards of Radioactive Luminescent Materials* – NAVSHIPSINST 5100.15 series.

5. Miscellaneous

a. *Radioactive Components of Target-Bearing Transmitters MK 8 and 9; Handling and Storage of* – NAVSUPINST 3400.2 series.

b. *Control and Disposition of Radioactive Equipment and Materials from Naval Nuclear Powered Ships* – NAVSHIPSINST 9890.12 series.

c. *Radioactivity in Water Supply and Waste Water Systems – Peacetime Detection and Control* – NAVFAC MO-218.

d. *Radiological Recovery of Fixed Military Installations* – NAVFAC TP-PL-13.

e. *Radiological Controls* – NAVSHIPS 389-0153.

f. *Nuclear Propulsion Plant Safety Manual* – NAVSHIPS 389-0197.

g. *Radiological Controls for Tenders and Submarine Bases* – NAVSHIPS 389-0266.

SPECIAL MATERIALS

2060. FIRE RESISTANT HYDRAULIC FLUID

The safety-type hydraulic fluid used primarily in shipboard hydraulic systems is comprised principally of a triaryl phosphate ester which is highly toxic and has a very low threshold limit value. Because of its very low vapor pressure, hazardous atmospheric concentrations of the fluid due to vaporization are unlikely at ordinary temperatures. However, under circumstances where mists or aerosols are generated or the fluid is at temperatures above 130°F., personnel should wear appropriate respiratory protective equipment. Contact with the skin should be avoided. Personnel constantly in contact with the fluid such as might occur in work on hydraulic systems or clean-up of spills should wear solvent resistant rubber gloves and also footwear, if necessary.

1. Gasoline Additive. Tricresyl phosphate is used as gasoline additive and as a pump lubricant in oxygen systems. It is available as a concentrate and in solvent dilutions. Tricresyl phosphate, being a triaryl phosphate ester, should be handled with the same precautions as those recommended above for safety-type hydraulic fluids.

WORK IN CONFINED SPACES

2070. DEFINITION OF TERMS

1. "Closed Compartments" or "Poorly Ventilated Spaces", are any spaces that are not well ventilated, or which have been closed for any appreciable length of time. Unventilated storerooms, blisters, double bottom tanks, cofferdams, pontoons, voids, idle furnaces, cold boilers, etc., are typical. The term includes spaces which are normally occupied or regularly used, but which have been vacated and sealed because of damage, or for some other unusual reason.

2. "Hot Work", is work involving welding, flame cutting, the use of open-flame equipment, or any work involving heating metal to or above a red heat. Riveting and any cold work involving the probability of striking sparks shall be considered as hot work, except when, in the opinion of the gas-free tester, circumstances do not necessitate such a classification. The precautions applicable to hot work shall apply to all other sources of flames, sparks, or intense heat, such as lighted cigarettes, open flame or electric cooking apparatus, nonexplosive-proof lights, electric motors, etc.

2071. CERTIFICATION OF CLOSED COMPARTMENTS

1. **Entry into Closed or Poorly Ventilated Spaces.** No person shall enter any closed compartment or poorly ventilated space in any naval unit unless and until a "gas-free" certificate has been issued by the safety engineer or his authorized representative to certify that the danger of poisoning or suffocation of personnel, or the danger of ignition or explosion of flammable gases has been eliminated or reduced to the lowest practical minimum.

2. **Entry in Emergencies.** In case of emergency, when it is necessary to send a man into a compartment or tank not certified as being gas-free or as containing sufficient oxygen, the man shall be equipped with an air-line mask or an oxygen rescue breathing apparatus. A line shall be securely fastened to him, the line being held by attendants outside who shall be prepared to haul him out if necessary. The men should use great care to see that this line does not become fouled. When using the air-line mask, the hose shall be attached to a source of air fit for breathing (*not* to an oxygen cylinder), and a slight positive pressure shall be maintained in the hose and face piece.

3. **Hot Work in Way of Explosives or Flammables.** No job involving hot work in the way of flammable or explosive materials shall be undertaken until the gas-free tester or his authorized representative has:

a. indicated which precautionary measures are appropriate to make the space safe;

b. certified that applicable directions have been complied with so that men can work in the area without danger of poisoning or suffocation, and that hot work can be undertaken without danger of fire or explosion.

4. **Watch.** No person shall perform work in any closed or poorly ventilated space, even though it is certified gas-free, without a watch posted outside. One watch may serve up to three such nearby spaces.

2072. GAS-FREE ENGINEER

1. **Qualification.** The gas-free engineer is a person qualified by training and experience to analyze hazardous conditions, especially with respect to entry into closed compartments and who has been authorized to decide in specific instances which precautionary measures shall be taken to safeguard personnel.

2. **Responsibilities.**

a. He shall post a suitable label or tag near the entrance to the space or in some conspicuous location, describing the condition of the space; or

b. He shall remain on the scene of operations until normal or safe conditions are restored.

c. He in turn may train and authorize competent persons to make preliminary inspections, gas tests, etc.

d. The gas-free engineer or his authorized representatives shall have authority to order men out of compartments or to suspend work whenever an unsafe condition is found to exist. However, he shall immediately notify the supervisor or other responsible authority of any such cessation of work and of the reasons therefor.

3. **Limitation of Authority.** When dictated by very urgent service requirements, the authority of the gas-free engineer may be relaxed as necessary but only with the approval of the supervisor. Under such circumstances, and if it is practical to do so, the gas-free engineer shall be consulted as to the safest practical alternatives, and his recommendations shall be followed insofar as the circumstances permit.

4. **Information on Labels.** Every certificate, label, or tag issued by the gas-free engineer shall give complete information regarding the compartment or space to which it applies, and the date and time it was issued. If it shows a SAFE designation, it shall also show the date and time after which the safe condition cannot be depended upon to exist and the safe notation will not be valid. To minimize confusion and misunderstandings, the limitations and applicability of the safety notations as well as their definitions are given in the following articles. These definitions are not intended to indicate which conditions must be attained or whether to clean, gas-free, inert with gas, blanket with steam, or press up the space.

2073. SAFETY NOTATIONS

1. **Colored Labels.** In connection with the requirements herein that the safety classification be shown on a tag hung outside a space, it is suggested that such tags be printed in various colors. It is suggested that red be used for "NOT safe for men – NOT safe for hot work" and green for "SAFE for men – SAFE for hot work." For all others, yellow is considered appropriate.

2. **Not Safe for Men – Not Safe for Hot Work.** To be used when the following conditions have been found to exist:

a. Personnel are in danger of poisoning due to hydrocarbon or other gases in excess of the limits of toxicity either present or likely to be evolved under prevailing conditions; or they are in danger of suffocation due to oxygen deficiency.

b. There is danger of work or explosion in the presence of hot work due to the existence of: concentrations of flammable vapors within the limits of flammability; the presence of residues likely to evolve dangerous amounts of flammable gases or vapors under the conditions prevailing; the presence of flammable or explosive materials which are likely to be affected by the hot work; or due to the fact that the surrounding spaces have *not* been protected as required.

3. **Safe for Men – Not Safe for Hot Work.** To be used when the following conditions have been found to exist:

a. Hydrocarbon or other gases in excess of the limits of toxicity are *not* present and are not likely to be evolved by the entry of workmen or by prevailing atmospheric conditions and the oxygen content of the air is sufficient for workmen.

b. There is danger of harm to workmen or of fire or explosion in the presence of hot work, due to the existence of one or more of the same conditions stated in 2.b above.

4. **Safe for Men – Safe for Hot Work.** To be used when the following conditions have been found to exist:

a. Toxic gases or vapors in excess of the limits of toxicity are *not* present, and are not likely to be evolved under *any working conditions* likely to prevail and the oxygen content of the air is sufficient for workmen.

b. Flammable or explosive materials or vapors have been removed, or adequately protected and surrounding spaces have been protected as required.

5. **Inerted – Not Safe for Men Inside – Safe for Men and Hot Work Outside.** To be

used when the following conditions have been found to exist:

a. A nonflammable (inert) gas has been introduced into the space and its concentration is such that the oxygen content in the space will not support combustion or life.

b. Adequate measures have been taken to isolate the space from occupied spaces, and to insure that it will remain isolated until the inerting medium is disposed of.

6. Pressed-Up – Safe for Men and Hot Work Outside. To be used when the following conditions have been found to exist:

a. The space has been entirely filled with water or oil (the certificate shall show which liquid has been used – no other liquids are permitted to be used).

b. Means have been provided to verify that the level of the liquid remains at or above the topmost point of the space to be welded, and to insure that no person attempts to enter the space.

2074. EXPLOSIVES

1. Removal from Area. When the gas-free engineer finds that contemplated hot work is in the way of explosives, torpedoes, ammunition, etc., he shall comply with the Naval Ordnance Systems Command provisions to remove all explosives to safe storage until normal conditions are restored.

2. Responsibility for Moving. If the requirement that explosives be moved is applicable, the gas-free engineer shall notify the gunnery officer (or the first lieutenant on ships not having gunnery officer), who will be responsible for having the moving of the explosives done in the manner prescribed in Ordnance Manual OP5. The gas-free engineer shall not assume the responsibility of ordering that explosives be moved or of directing how they shall be moved; but he shall not issue a "SAFE" certificate for the space until he is satisfied that the explosives are a safe distance from the hot work. When he is satisfied, he shall classify and tag the space "safe for hot work."

2075. COMBUSTIBLE MATERIALS

When hot work is contemplated in the way of combustible materials, they shall be removed from the space, or steps shall be taken to protect the materials from the effects of the hot work. When the gas-free engineer is satisfied that adequate precautions have been taken, he shall classify and tag the space "safe for hot work."

2076. NAVAL VESSELS

1. For General Repairs and Overhaul. Vessels at commercial or naval shipyards or at advanced bases shall empty, clean, and gas-free all bulk storage tanks, cofferdams, pumprooms, and other spaces (such as shaft alleys, wells, sumps, bilges, and voids coated with bitumastic or filled with oil for corrosion protection) within which hot work is to be done and which is subject to accumulation of combustible or toxic gases. Bunker tanks containing fuel oil needed to keep steam up, or to keep auxiliary machinery operating, need not be emptied. Cargo-heating coils and cargo-smothering lines and vent lines shall be steamed and blown. Cargo pumps and cargo lines shall be blown with steam or flushed with water. Spaces thus cleaned and gas-freed shall be labeled "Safe for men – safe for hot work – EXCEPT on the piping." Bilges in Naval vessels undergoing overhaul shall be inspected frequently for the presence of oil. If detected, such bilge areas shall be cleaned and certified to be gas free. Welders and burners working in the vicinity of the bilges shall not permit an arc to be struck or a torch to be lighted until such bilge areas are certified safe.

2. Piping. Any piping, pumps, valves, etc. likely to contain flammable liquids (intake, discharge, distribution, and service systems; heating, displacement, smothering and vent systems; and ladders, grabs, etc., made of tubing in bulk tanks), on which hot work will be done, likely to be affected by hot work nearby, or not tight enough to prevent leakage into the space to be worked in or on, shall be disconnected and blanked off, and shall be cleaned and gas-freed or inerted.

No "Hot Work" shall be undertaken until the gas free engineer has certified the systems safe with respect to danger from fire or explosion. The safety notation specified in the above paragraph shall be modified to indicate which piping is "Safe" and which is "Not Safe." Other spaces containing substantial quantities of liquids in "package stowage" or as a result of an accident in a free state, shall be emptied by any practicable means.

3. **Care of Adjacent Area.** The gas-free engineer should not confine his attention to the vessel alone. Utmost care should be taken to avoid spilling flammable liquids into a drydock or allowing oil or oily water to discharge overboard to create a serious fire hazard in harbor areas. When welding *inboard* alongside a pier, the pier in vicinity of the hot work should be "wet down" and any oil slick on the water around the vessel should be cleared. Waste, rags, etc. soaked with flammable liquids should be disposed of promptly and carefully.

4. **Restoring Operating Conditions.** When work is finished on a vessel, any tank vents, hatches, valves, etc. which were closed, locked, or sealed while hot work was in progress shall be checked to insure that proper operating conditions have been restored. This is especially important with regard to tank vents in order to avoid damage when tanks are refilled. Inert gases in spaces which must be entered shall be dissipated and the spaces certified and labeled in accordance with *NAVSHIPS Technical Manual*, article 9920.272 prior to entry.

2077. SUSPECTED COMPARTMENTS

1. **Gas-Free Engineer.** Every closed compartment or poorly ventilated space, and all tanks, shall be considered UNSAFE for hot work until the gas-free engineer has inspected the space and has indicated that adequate safety measures have been taken.

2. **Naked Lights.** Matches, cigarette lighters, open flames, ordinary electric lights, flashlights, or any sparking electric apparatus shall not be allowed in suspected compartments or in the vicinity of open hatches, etc., leading thereto. Portable lights used by cleaning parties shall be of the steamtight globe type, with any exposed metal parts of a nonsparking alloy or protected against striking a spark.

3. **No Smoking.** Smoking shall not be permitted in confined spaces or areas.

4. **Fire Extinguishers.** Suitable fire extinguisher apparatus shall be provided in the vicinity of unsafe compartments or spaces.

5. **Adjacent Spaces.** Each space that is subject to accumulation of hydrocarbon or other gases and is in contact with a space in or on which repairs will be made (including spaces in contact at the corners or in contact with the top or bottom) shall be inerted. Classify and label "INERTED – Not Safe for Men Inside – Safe for Men and Hot Work Outside." In the case of a minor repair, only those contacting spaces need be inerted which, in the judgment of the gas-free engineer, may possibly be affected by the hot work (as when working on the boundary of a tank but very close to the bulkhead between it and another tank). Other contacting spaces need not be inerted for a minor repair.

6. **Regeneration of Gas.** The possibility of regeneration of gas due to open pipes or other connections between clean and dirty tanks should be recognized and guarded against.

7. **Drifting Fumes.** Care shall be taken to insure that hatches, pipes, passageways, companionways, innerbottoms, etc. subject to gas accumulation, and not cleaned or inerted, are kept closed, and that vents are so arranged that flammable fumes or vapors cannot drift into the vicinity of the hot work. Tanks in which there is piping on which men are working, and spaces or piping that are inerted, should be isolated from other spaces containing toxic flammable liquids or vapors by blanking off interconnecting pipe lines, or by closing valves and securing rope or seizing wire or other suitable measures.

8. **Leakage.** In addition to the cargo tanks, service tanks, ballast tanks, settling tanks, and other compartments in which the presence of flammable liquids is known it will be found that toxic flammable vapors from dripping of liquids from pipe joints, pumps, valves, and leaky containers, or from seepage, drainage, or other causes, often contaminate the air in pumprooms, cofferdams, cargo holds, shaft alleys, sumps, bilges, etc.

9. **Coated Containers.** Compartments which are often coated with bitumastic or filled with oil for corrosion protection, and which become filled with flammable vapors when heated, include voids, rudders, skegs, ramps (for landing craft), struts (fabricated), and water tanks.

10. **Water Tanks.** Always use care in entering or working on water tanks. Even if they are *not* coated with bitumastic, or are not near enough to oil tanks to be subject to oil leakage, they frequently contain explosive, toxic methane (marsh gas) from the decomposition of organic materials in stagnant water.

11. **Changing Conditions.** Shifting of ballast, disconnecting of pipe lines, shifting of the vessel from one berth to another and similar operations may result in release of flammable liquids or vapors. If such operations are done after a "SAFE" certificate has been issued, particular care should be exercised to insure that an unsafe condition has not been created.

12. **Examination, Cleaning and Painting.** When a vessel is in a shipyard for this purpose, the gas-free engineer shall exercise extra vigilance to make sure that incidental repairs involving hot work for which the need has become evident in the course of other work, are not undertaken until the location has been inspected and any necessary safety measures taken. While the vessel is in the shipyard, all spaces subject to gas accumulation shall be kept closed; or shall be opened and entered only after the proper precautions as prescribed by the gas-free engineer have been taken.

2078. AIR SAMPLING AND ANALYSIS

1. **Testing Air.** The air in tanks which have been empty for a long time and the air in other closed or poorly ventilated spaces shall be tested for the presence of toxic or flammable concentrations of hydrocarbon or other vapors and for sufficiency of oxygen. Air conditions shall be checked with the oxygen indicator and the combustible gas or carbon monoxide gas indicator, or by chemical analysis as frequently as circumstances appear to require. A check shall be made before men enter if work has been suspended overnight or for any similar period. Persons entering spaces for gas tests should be equipped with air-line masks and lifelines tended by reliable men outside. If one or more of the tests show any positive indication of the presence of any flammable vapor, regardless of whether it is below, within, or above the explosive range, the space shall be gas-freed and cleaned by the applicable procedures.

2. **Measuring Oxygen Concentration.** The flame safety lamp has been used for many years to determine the presence or absence of sufficient oxygen to support life. Today, however, dependable portable oxygen indicators are abundantly available and shall be used in lieu of the flame safety lamp. These instruments are easier to handle and maintain, and since they do not use an open flame they are safer.

3. **Combustible Gas Indicators.** These indicators are capable of detecting all mixtures of air or oxygen with combustible gases or vapors from fuel oils, gasoline, alcohol, acetone, and of illuminating or fuel gas, hydrogen, and acetylene. They are sensitive in showing the presence of concentrations of these vapors or gases up to the lower explosive limit and give an accurate measurement of the percentage concentrations of the mixture if it is in or beyond the explosive range. They are *not*, however, sufficiently sensitive to measure accurately the small concentra-

tions of flammable gases which can have an appreciably toxic effect when breathed for an extended period of time (8 hours or more), nor do they detect nonflammable gases which are toxic.

4. **Carbon Monoxide Indicators.** These devices are much more sensitive in detecting carbon monoxide than the combustible-gas indicators but are limited to the detection of this one gas.

5. **Determination of Safe Conditions.** There is satisfactory assurance of freedom from toxic concentration of flammable gases when:

a. the space has been thoroughly ventilated;

b. tests with the combustible-gas indicators (and with the carbon monoxide indicators when available) have given *no* indication of the presence of combustible gases (if any gas is indicated by the instrument, even though below the flammability limit, it is probable that the concentration is above the toxicity limit); and

c. tests with the flame safety lamp have indicated no oxygen deficiency.

6. **Physical Symptoms Indicating Toxic Gas.** The conditions noted above do not give positive assurance of freedom from toxic concentrations of nonflammable gases such as carbon-dioxide, nitrogen, carbon-tetrachloride, and of vapors. However, when the space has been thoroughly ventilated, and there is no oxygen deficiency as indicated by the oxygen indicator, workers in such atmospheres will receive warning of danger through such symptoms as labored breathing, excessive fatigue from slight exertion, dullness, etc., a considerable time before more serious reactions are experienced.

2079. TOXIC GASES

1. **Physical Effects of Petroleum Vapor.** Breathing of the vapors from petroleum products gives effects ranging from mild exhileration, irritation of the eyes, severe headache, complete intoxication, unconsciousness and death. The effects become more pronounced as the percentage of concentration and time of exposure are increased. An added danger associated with breathing these vapors is the danger of accidents resulting from the dizziness induced by small concentrations not otherwise harmful.

2. **Use Masks if in Doubt.** The usual portable combustible gas indicators are not sensitive enough to determine whether or not a small concentration of combustible gas is above or below the toxicity limit. If accurate determination of the gas concentration is desired, chemical laboratory analyses of air samples are necessary. However, the safest procedure is to eliminate dangerous gases and vapors entirely, or to use air-line masks when working for extended periods in suspected atmospheres.

3. **Carbon Monoxide.** Carbon monoxide may be present in compartments painted with a linseed oil base paint and sealed immediately thereafter.

4. **Hydrogen Sulfide.** Hydrogen sulfide and other toxic gases will be generated by mildewing or rotting foodstuffs or other organic matter, such as cloth, leather, and wood. Mildewing and rotting are accelerated when the space is warm and humid.

5. **Carbon Dioxide.** An excess of carbon dioxide is frequently found in refrigerator spaces even though the spaces are undamaged and the foodstuffs are perfectly edible. This is due to the lack of ventilation and the tendency of foods to absorb oxygen slowly and give off CO_2. The concentration is rarely high enough to be dangerous unless a man stays in the space longer than a few minutes at a time, in which case he is liable to be overcome and eventually suffocated.

6. **Oxygen Deficiency.** Oxygen deficiency can be caused by the rusting of metal which has been cleaned to bare metal and then sealed. The mildewing and rotting of organic material in closed compartments can also cause an oxygen deficiency.

2080. INERTING AND PRESSING UP

1. **Inerting with Gas.** In an apparently clean container there may still be traces of oil or grease under the seams even though the vessel may have been cleaned and flushed with caustic soda solution. The heat of the welding or cutting operation may cause such oil or grease to give off flammable vapors to the extent that an explosive mixture may be formed inside the container. Such mixtures can be prevented from burning or exploding by mixing in a quantity of an inert or nonflammable gas to displace a substantial percentage of the volume of the vapor-air mixture. Carbon-dioxide, nitrogen, and helium are suitable for this purpose.

2. **Blanketing with Steam.** When making emergency repairs and when it is impractical to obtain or use one of the inert gases or to clean and gas-free the spaces, steam may be used in lieu of inert gas to blanket the compartment. However, steam shall *never* be used under any circumstances in spaces containing flammable materials in closed containers, or in magazines or spaces adjoining magazines.

3. **Pressing-Up.** Pressing-up is an alternative to inerting. In this procedure, the tank or space shall be completely filled with water, fuel oil, or lubricating oil. The gas-free engineer shall take steps to ensure that there are no pockets between structural members, on the high side under a slanting top, or on a listed ship into which the vapor-air mixture will be compressed and from which the liquid will be excluded.

4. **Venting of Containers.** Make sure that jacketed container or other hollow parts are sufficiently vented before heating, welding, or cutting. Remember that air or any other gas which is confined inside a hollow part will expand greatly when heated. The internal pressure created may be sufficient to cause the part to act like a bomb.

5. **Be Suspicious of Light Metal Parts.** A metal part which is suspiciously light is probably hollow, and should be drilled to vent it before heating. Every possible precaution should be taken with jacketed vessels, tanks, or containers to sufficiently vent the confined air before doing any hot work.

6. **Vents.** Vents and telltales shall be provided when needed, to eliminate vapor pockets and to verify the liquid level. However, drilling and tapping for them shall *not* be permitted on gasoline or alcohol tanks, but may be done on other tanks. Drilling and tapping shall be done *slowly* under a steady stream of water.

7. **Oil Filled Spaces.** Spaces entirely filled with oil should be vented before heating to prevent damage due to expansion of the oil.

LABELING

2085. PURPOSE.

The development of new chemical products and the introduction of new chemical processes make it mandatory that precautionary measures be taken during the handling of toxic and dangerous chemicals. Warning labels affixed to containers of hazardous materials are one of the most practical means of accomplishing this objective. The purpose of these instructions are to provide information as to the labeling and marking system provided for Navy-wide use through NAVMAT-INST 5100.3.

2086. SCOPE.

The hazardous materials to be labeled are listed in MIL-STD 1341 (SA). The labeling is intended for rapid recognition of containers during handling and storage operation both afloat and ashore.

1. **Exclusions.** The following materials are excluded from the Navy labeling system

564-350 O - 74 - 23

since specific programs and current instructions are provided for each of these materials; ammunition; weapons; explosives, explosive actuated devices, propellants, pyrotechnics, chemical and biological warfare materials, medical and pharmaceutical supplies and bulk fuels.

2. **Labeling and Marking System.** Labeling and marking of hazardous material shall be in accordance with MIL-STD 1341 (SA). MIL-STD 1341 (SA) is essentially the marking and labeling system of the National Fire Protection Association (NFPA) 704M. MIL-STD 1341 (SA) requires that the specified labels and marking be applied to hazardous material by the Supplier to the Navy to each unit, intermediate, and shipping container, unit loads and individual components within kits and sets. Hazardous Materials obtained through the Navy supply system will be so marked and labeled. Activities and ships procuring from sources other than the Navy supply system shall assure that labels and marking in accordance with MIL-STD 1341 (SA) are applied.

2087. RESPONSIBILITIES.

1. **Chemical Control Committee.** At each activity and ship there should be established a Chemical Control Committee, or equivalent thereof to administer the technical aspects of the labeling program and to keep the program current. Directives should be prepared by the committee for promulgation by the commanding officer. These should be based on applicable instructions and should be tailored to suit the needs of the ship or activity. The size and nature of the ship or activity will be a major factor in determining whether this committee will be a formal organization composed of cognizant personnel, or whether it will consist of one individual to whom this additional responsibility is delegated.

2. **Supply Officer.** The Supply Officer of each activity and ship shall be responsible for assuring that local purchases of hazardous material are made in accordance with MIL-STD 1341(SA) or that the labeling and marking in accordance with MIL-STD 1341 (SA) are applied upon receipt of hazardous material.

3. **Supervisors.** Supervisory personnel shall be responsible for the proper labeling of any containers to which hazardous materials may be transferred after receipt in their work areas.

4. **Management.** Cognizant management personnel shall institute a training program to familiarize personnel with the Navy labeling system emphasizing the significance of the color coding and the hazard classification and the numbers designating the degree of hazard.

2088. ADDITIONAL LABELING.

It may be necessary on occasion for qualified investigators, (Physicians, Chemists, Hygienists, Safety Personnel, Toxicologists, Fire Prevention Personnel), to work with new products before adequate chemical, physical, and toxicological data are available. To cover such cases *only*, the following label shall be used during the period of investigation–

(Name or description of product)
FOR INVESTIGATIONAL USE ONLY
Statement of Known Hazards
(Appropriate precautionary measures) (Appropriate instructions in case of contact or exposure)
IMPORTANT! The chemical, physical and toxicological properties of this product have not been fully investigated and its handling or use may be hazardous.
EXERCISE DUE CARE

NAVMATINST 5100.3 provides for the action to be taken (Request to BuMed) when the hazards of the material cannot be determined locally.

2089. AVAILABLE LABELS.

Pressure sensitive paper labels in accordance with the MIL-STD 1341 (SA) are available in Navy supply. Their form numbers and ordering information are given in NAVSUP Publication 2002, *Navy Stock List of Forms and Publications.*

2090. LABEL DESIGN.

The label identifies the hazards of a material in terms of three principal categories, namely, "health," "flammability," and "reactivity (instability)"; and indicates the order of severity numerically by five divisions ranging from "four (4)," indicating a severe hazard, to "zero (0)," indicating no special hazard. This information is presented by a diamond shaped diagram divided into four diamond shaped diagrams. The "health" hazards will always be shown by the diamond on the left, (blue background or blue numerals). The "flammability" hazards will always be shown by the diamond at the top. (Red background or red numerals). "Reactivity" hazards will always be shown by the diamond on the right (yellow background or yellow numerals). The bottom diamond (white) will indicate specific types of hazard including the symbol ₩ which means "Do not use water if this material is burning (or near something that is burning)." Other symbols used alone or in combination with each other or ₩ are:

OXY Oxidizer	Do not store with combustible material
ACID Acid	
ALK Alkali	
COR Corrosive	

1. **Sample Label.**

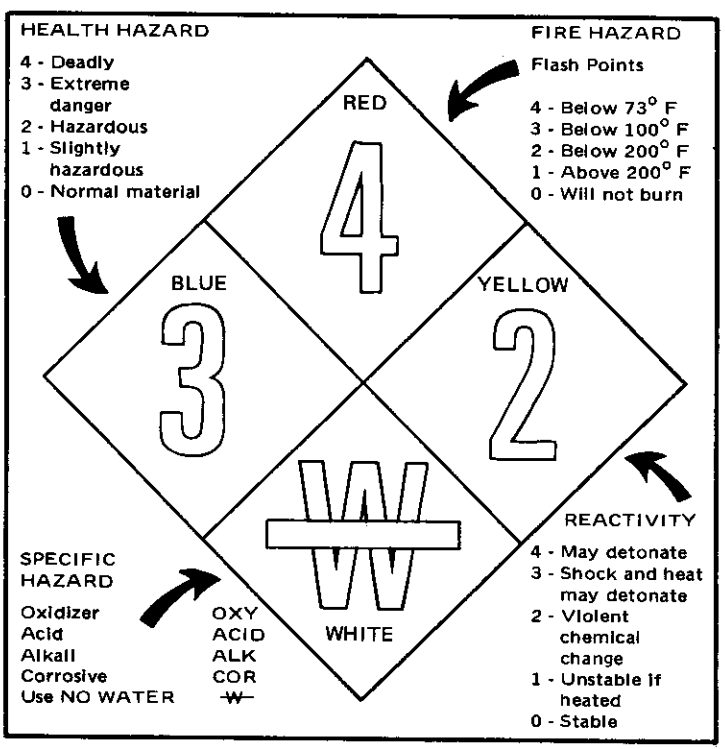

2. Explanation of Label Designations.

HAZARD IDENTIFICATION SYSTEM

Identification of Health Hazard Color Code: BLUE		Identification of Flammability Color Code: RED		Identification of Reactivity (Stability) Color Code: YELLOW	
	Type of Possible Injury	Susceptibility of Materials to Burning		Susceptibility to Release of Energy	
Signal		Signal		Signal	
4	Materials which on very short exposure could cause death or major residual injury even though prompt medical treatment were given.	4	Materials which will rapidly or completely vaporize at atmospheric pressure and normal ambient temperature, or which are readily dispersed in air and which will burn readily.	4	Materials which are readily capable of detonation or of explosive decomposition or reaction at normal temperatures and pressures.
3	Materials which on short exposure could cause serious temporary or residual injury even though prompt medical treatment were given.	3	Liquids and solids that can be ignited under almost all ambient temperature conditions.	3	Materials which are capable of detonation or explosive reaction but require a strong initiating source or which must be heated under confinement before initiation or which react explosively with water.
2	Materials which on intense or continued exposure could cause temporary incapacitation or possible residual injury unless prompt medical treatment is given.	2	Materials that must be moderately heated or exposed to relatively high ambient temperatures before ignition can occur.	2	Materials which are normally unstable and readily undergo violent chemical change but do not detonate. Also materials which may react violently with water or which may form potentially explosive mixtures with water.
1	Materials which on exposure would cause irritation but only minor residual injury even if no treatment is given.	1	Materials that must be preheated before ignition can occur.	1	Materials which are normally stable, but which can become unstable at elevated temperatures and pressures or which may react with water with some release of energy but not violently.
0	Materials which on exposure under fire conditions would offer no hazard beyond that of ordinary combustible material.	0	Materials that will not burn.	0	Materials which are normally stable, even under fire exposure conditions, and which are not reactive with water.

3. Interpretation of Sample Label. As an example of rapid recognition of the hazards of a material labeled the same as the sample label, an observer can immediately determine the hazards of the material as follows:

a. An extreme health hazard exists (left diamond, blue color, numeral "3") and that personal protection is required (respirators, eye protection, etc.).

b. The worst possible fire hazard exists (top diamond, red color, numeral "4"), special firefighting and fire protection required.

c. The material will react violently under fire conditions (right diamond, yellow color, numeral "2"), evacuation plans necessary.

d. The use of water is prohibited, ("W" with slash line through it) and that a dry chemical or CO_2 extinguishing agent must be used.

2091. GUIDANCE ON HAZARDOUS MATERIALS

Of the references on hazardous materials listed at the end of this chapter, two are particularly mentioned because of their significance. NAVSUP publication 4500, *The Consolidated Hazardous Item List (CHIL)*, Cog I Stock No. 0588-005-0000 provides all Navy users with a consolidated listing of potentially hazardous items in the supply system. All ships and stations should procure the publication for guidance. NFPA (National Fire Protection Association) publication, "Fire Protection Guide on Hazardous Materials," (to be listed under Cog I procurement) furnishes information on the hazards of materials in order to prepare for emergencies involving them. Ships and stations should procure the publication when it is made available.

INDEX

A

Abrasive blasting, 1320-1330
  automatic safety shut-off, 1322.2
  bodily contact, 1323
  communication, 1327
  dust, 1325
  equipment, 1322
  high pressure air flasks, 1330
  line, surges in, 1326
  machine operation, 1329
  staging, 1328
Abrasive grinding wheels, metal, 0926
  portable, power, 1433
Accident causes, materials handling, 0301
Acetone, 2055.5
Acetylene, compressed, 1021
Acetylene cylinders, 1021
Acids and alkalies, 2005
Acid transfer, 2006
Adzes, 1403
Air compressor pipelines, 1215
Air compressors, 0737
Air compressors and tanks, 0523.6
Air lines, main machinery, 0703
Air receivers, 0735-0736
Aircraft, crash and rescue, 0405
  defueling, 0419
  engine operations, 0417
  fuel cell repair, 0410
  fuels and fueling operations, 0418
  movement, 0407
  servicing and ground testing, 0408
  taxiing, 0407.2
  tire maintenance, 0409
Aisles, building, 0202.4
  working, 0312
Ambulance safety, 1603
Ambulances, 0515.2
Amyl acetate, 2055.6
Antennas, working on, 1545
Arc welding, 1035-1039
  electrode holders, 1036
  equipment, 1006.5a
  inert-gas, 1039
  protection from shock, 1035
Aromatic naptha, 2055.2c
Arresting gear, aircraft, 0423
Asbestosis, 2058.2
Asphalt plants, 0831.3
Automotive equipment, airfield, 0414
Automotive fire apparatus, 0515.3
Axes, 1403

B

Band saws, wood, 1111
  guards, 1111.2b
Barber shop, exchange, 1918
Barriers and barricades, aircraft, 0423
Bars, wrecking, 1416
Batteries, charging, motor vehicle, 0524.6
  charging, 1520.1b
  dry cell, 1520.2
  mercury, 1520.2c
  wet cell, 1520.1
Battery shops, aircraft, 0415
Beaders, sheet metal, 0923.3
Beauty shop, exchange, 1919
Belts, seat, motor vehicle, 0513.4
Benzene, 2055.2a
Beryllium, 2057.1
Bits, boring, 1404
Bituminous coatings, 1313
Blasting, 0855-0864
  abrasive, 1320-1330
  air compressors, portable, 0858
  drilling, 0857
  electrical wiring, 0862
  explosive, stowage and handling, 0856
  inspection after, 0863
  loading charges, 0859
  machines, 0861
  misfires, 0864
  preparation for firing, 0860
Blowtorches, gasoline, 1216
Boats, 0630-0637
  fire prevention, 0635
  fueling, gasoline, 0636
  operation, 0632
  operator qualifications, 0632.1
  posting safety precautions, 0634
  safety equipment, 0633
  starting engine, 0637
Boatswain's chair, 0836.11
Boiler furnace, entering, 0725.3d
Boiler water, testing, 0725.2c
Boilers, stationary, 0725-0727
  attendance, 0726.1b
  cleaning and repairing, 0725.3
  firing, 0726.2
  operating precautions, 0726
  testing and inspection, 0725.2
  unattended, 0726.10
  valve pull chains, 0726.11
  valves, 0726.4
  water level, 0726.3

Bolo, knife, 1418
Bombs, photoflash, 1805.5
Bonding, fueling nozzles, 2017.5d
  gasoline hose, 2021.8
Boring machines, wood, 1117
Boring mills, metal, 0919
Braces, boring, 1404
Brakes, hand, sheet metal, 0923.4
Buffers, metal, 0926
  portable, power, 1433
Building, fire prevention, 0205
  floors, 0202.5
  rubbish disposal, 0202.3
  stairs, 0202.6
  walkways and aisles, 0202.4
  warning signs and barricades, 0202.2
Bulbs, photoflash, 1805.3
Bulldozers, 0874
Burning, construction site, 0872
Buses, general precautions, 0515.1a
  school, 0515.1b
Butcher shop, commissary, 1906
  electrical equipment, 1906.4
Butyl acetate, 2055.6
Butyl alcohol, 2055.4c

C

Cable, electrical, 1517
Cables, arc welding, 1037
Cadmium, 2057.2
Capacitors, preventing shock from, 1542.2
Car pits, motor vehicle, 0524.5
Carbon monoxide indicator, 2078.4
Carbon tetrachloride, 2055.3b(1)
Cargo handling, 0601-0613
  flammables, 0610-0613
  fuel and diesel oil, 0610.2
  gear, ships, 0603.2
  personnel safety, 0602
Cargo, breaking down, 0605.1
  discharging, 0604
  dunnage, 0605.3
  loading, 0604
  moving, 0604.2
  tiering and blocking, 0605.2
Case hardening, cyanide, 0955
Catapults, aircraft, 0424
Cathode-ray tubes, 1546
Chains, 0823
Chairs, office, 0204.4
Chemical hazards, photographic, 1806
Chemical storage, laboratories, 1707
Chemicals, handling, laboratories, 1708
  photographic, mixing, 1806.4
Chemicals, principal, 2007
  acetic acid, 2007.1
  ammonia, 2007.11
  carbolic acid (phenol), 2007.2
  caustic potash (potassium hydroxide), 2007.12
  caustic soda (sodium hydroxide, lye), 2007.13
Chemicals, *continued*
  chromic acid (chromium trioxide), 2007.3
  hydrochloric acid, 2007.4
  hydrofluoric acid, 2007.5
  mixed acid, 2007.7
  nitric acid, 2007.6
  oxalic acid, 2007.8
  soda ash (sodium carbonate), 2007.14
  sodium bisulfate (sodium acid sulfate), 2007.10
  sulfuric acid, 2007.9
Chicken ladders, 0836.20
Chisels, wood, 1405
Chlorinated solvents, inert-gas welding, 1039.1
Chlorine leaks, water treatment plants, 1233
Chlorine poisoning, first-aid, 1234
Chlorobenzene, 2055.3b(4)
Chopper, food, 1907.2g
  vegetable, 1907.2d
Chromium, 2057.3
Circuit breakers, 1514
Circular resaws, 1110.8
  guards, 1110.8
Circular saws, portable, 1110.10
  guards, 1110.10
Circular saws, wood, 1110
Cleaners, paint, 1316
Cleaning and finishing rooms, foundry, 0946
Clearing and grading, 0870-0876
Closed compartments, certification, 2071
  safety notations, 2073
Cloth cutters, tailor shop, 1916.2d
Clothing hazards, commissary, 1901.3
Coal, extinguishing fires, 2036.4
  handling, 2035
  spontaneous ignition, 2036
  storage, 2036.2; 2036.5
Cobbler shop, exchange, 1915
Coffee grinder, commissary, 1905.1
Coffee urn, 1908.1b
Combustible gas indicator, 2078.3
Combustible materials, near hot work, 2075
Commissary facilities, 1901-1906
Compressed air tanks, 0735-0736
Compressed gases, 2040-2049
  acetylene, 1021
  ammonia, 2049.4
  carbon dioxide, 2049.2
  chlorine, 2049.3
  combustible, 2049.6
  freon, 2049.5
  oxygen, 1022
Compressors, air, 0737
Concrete bucket towers, 0830.7
Concrete construction, 0814
Concrete equipment, 0831
Concrete mixers, 0831.2
Confined spaces, air sampling, 2078
  inerting, 2080.1
  on naval vessels, 2076
  pressing up, 2080.3

Confined spaces, *continued*
suspected compartments, 2077
toxic gases, 2079
working in, 2070-2080
Construction equipment, 0820-0831
accident causes, 0820.2
color code, 0820.3o
operator qualifications, 0820.3a
signals, 0820.4
Cooker, pressure, 1907.2k
Core making, foundry, 0939
Crane operation, 0825
Crane operators, 0825.3-4; 0820.3a
Crane safety devices, 0825.16
Cranes, crawler, 0826
floating, 0828
gantry, 0828
hammerhead, 0828
locomotive, 0827
overhead, traveling, 0828
portal, 0828
tractor-mounted, 0826
truck, 0826
Crawling boards, 0836.20
Crowbars, 1416
Crucibles, foundry, 0941-0945
Cube steak machine, 1906.4c
Cupolas, foundry, 0940
Cutters, cloth, tailor shop, 1916.2d
diagonal, 1410
food, 1907.2f
pipe, 1409
side, 1410
Cyanide, sodium and potassium, 0955
Cylinder valves, gas welding, 1023
Cylinders, compressed gases, 2040-2049
care, 2044
empty, 2048
handling, 2045.2
painting, 2042
repairing, 2043
storage, 2045.1a; 2046
testing, 2044
toxic hazards, 2047
Cylinders, gas welding, 1020-1021
oxygen, 1022
shipboard, 1028.2b

D

Dairy department, commissary, 1905.2
Defueling aircraft, 0419
Demolition, 0840-0849
catch platforms, 0847
preparation of location, 0842
removal of floors, 0848
removal of materials, 0844
removal of walls, 0846
sidewalk sheds, 0843
stairs, passageways, and ladders, 0845
steel construction, 0849
Dempster-dumpster, 0515.5
Derricks, 0829
breast, 0829.2
guy, 0829.6
stiff-leg, 0829.5
Desks, office, 0204.3
Diagonal cutters, 1410
Dies, threading, hand, 1414
Dipping material, 0954
Dipping, paint, 1315
Dishwashing machine, 1909.2b
Ditching machines, 0888
Diving, 0625-0626
general, 0625
self-contained, 0626
Doors, building, 0202.7
Dope room, aircraft, 0416
Draw knives, 1116
Dredging, 0892
Drift pins, 1405.8
Drill presses, metal, 0918
Drills, hand, 1406
portable power, 1426
rock, pneumatic, 1428
Drinking water, construction site, 0802
Dry cleaning equipment, 1917.4
Dry cleaning operations, 1917.5
Dry cleaning shop, exchange, 1917
Dumbwaiters, 1910
Dusts, mineral, 2058
plastic, 2056.1

E

Electric power lines, equipment, 1531
handling wire, 1532
potheads, 1534
preparing trees, 1533.6
underground, 1535
working on, 1530-1535
Electric wiring, blasting, 0862
construction site, 0809
Electrical apparatus, laboratory, 1705
Electrical circuits, checking, 1525.3
energized, 1525
high voltage, 1525.4c
intermediate voltage, 1525.4b
low voltage, 1525.4a
Electrical equipment, 1510-1520
aircraft, 0422
construction site, 0809
inspection and maintenance, 1503
photography, 1804
portable, 1513
Electrical installations, building, 0220
main machinery, 0705
Electrical machinery, starting, 0705.2
Electrical shock, special precautions, 1501.11
resuscitation, 1501.12
Electrical substation fencing, 1516

Electrode holders, arc welding, 1036
Electron tubes containing radioactive materials, 1548
Electronic equipment, servicing, 1542.5
  repair, 1542.6
Electronic flash equipment, 1805.4
Electronic safety, 1540-1549
Electronics, aircraft, 0422
Electroplating shops, 0964
Elevator safety, 0221
Elevators, construction, 0830
Emergency conditions, 0103.3d
Engine, power boat, starting, 0637
Engine operations, aircraft, 0417
Epoxy resins, 2056.2
Ethyl acetate, 2055.6
Ethyl alcohol, 2055.4b
Excavation, 0880-0892
  bracing of, 0882
  public protection, 0881
Exchange, facilities, 1915-1921
  Navy, 1902
Explosives, blasting, stowage and handling of, 0856
  near hot work, 2074
  transporting of, 0517
Extractor, dry cleaning, 1917.4d
  laundry, 1921.5b
Eye protection, welding, 1011

F

Fans, office, 0204.7
Fencing, electrical substation, 1516
Files, tool, 1407
Filing cabinets, office, 0204.2
Film, photographic, 1803
Fire extinguishing, petroleum fuels, 2019
Fire fighting equipment, petroleum fuels, 2018
Fire Hazards, painting, 1301
Fire prevention, aircraft operations, 0402
  boilers, stationary, 0727
  construction site, 0813
  dry cleaning, 1917.6
  electricity, 1502.1
  garage, 0522
  general, 0205
  laboratories, 1706
  main electrical machinery, 0705.4
  power boats, 0635
  railroads, 0503
  warehouse, 0313
  woodworking, 1107.3
First-aid stations, 0804
Flame arresters, power boats, 0635.1b
Flammables, cargo handling, 0610
  loading in port, 0611; 0612
  night loading, 0612.4
  precautions after loading or discharging, 0613
  safety during loading, 0612.2
Flash bulbs, photographic, 1805.3
Flash equipment, electronic, 1805.4
  photographic, 1805
Flash point, petroleum fuels, 2012
Floating equipment, (*see* Boats) 0630-0637
Floor capacities, warehouse, 0310
Floor covering, insulating, electrical, 1501.3
Floors, building, 0202.5
Foamed plastics, 2056.3
Food chopper, 1907.2g
Food cutter, 1907.2f
Forges, 0950-0957
Fork trucks, 0321
Forming rolls, metal, 0925
Foundries, 0935-0946
  health requirements, 0935
Fountain, mess, 1908.1c
Freezer, ice cream, 1908.1d
Freon, compressed, 2049.5
Fryer, deep fat, 1907.21
Fuel dispensing nozzles, automatic, motor vehicle, 0525.3c
Fuel, JP-5, 2022
Fuel oil, vapor, 2015
Fueling, motor vehicles, 0514.3; 0525
Fueling operations, aircraft, 0418
Fueling, gasoline power boats, 0636
Fuels, petroleum, 2010-2022
  accidental ignition causes, 2017
  controlling vapors, 2016
  storage, 2013
Furnace, stationary boiler, entering, 0725.3d
Furnaces, forge, 0953
  foundry, 0940
  liquefied petroleum gas, 1217
  plumbers, 1216
Fuses, electrical, 1518

G

Galley, messing, 1907
  equipment, 1907.2
Galvanized steel, welding, 1052
Garage safety, 0520-0525
Garages, fire prevention, 0522
  tools and equipment, 0523
Gases, compressed, 2040-2049
  medical, handling of, 1601
Gas-free engineer, 2072; 2077.1
Gas welding cylinders, 1020-1022
Gas welding equipment, 1006.5b
Gasoline, 2021
  bulk handling, 2021.7
  explosive mixtures, 2021.1
  filling tanks, 2021.10-.11
  large leaks, 2021.12
  leaky containers, 2021.5
  precautions preliminary to loading, 0611.4
Gin poles, 0829.4
Glassware, laboratory, 1704
Gloves, rubber, electrical, 1501.2b(1)

Governors, pump, 0711.1c-d
pump pressure regulating, 0712
Graders, earth, 0875
Grill, messing, 1907.2m
Grinder, meat, electric, 1906.4b
Grinding wheels, general, 0926
guards, 0927.6
operating, 0927
portable, 1433
Ground returns, arc welding, 1038
Grounding metal parts, 1512
Grounds, fire hazards, 0201.1
personnel hazards, 0201.2
Guards, band saws, wood, 1111.2b
belt, 0717
boring machines, wood, 1117.6
circular resaws, 1110.8a
circular saws, 1110.3a
construction of, 0719
gears and friction drives, 0715
grinding wheel, 0927.6
jointers, 1114.4
lathes, 0915.2
machine tools, 0904
main machinery, 0715-0719
planing and molding machines, 1115.1
portable circular saws, 1110.10
power presses, 0928.2
profile and swing-head lathes, 1115.1
shafting, 0718
shapers and planers, 0917.2
shapers, wood, 1112.12
sprockets, 0716
tenoning machines, 1113.1
universal woodworking machines, 1119.1

H

Hammers, 1408
forge, 0952
power, 1429
Hand planes, wood, 1116
Hand tools, 1401-1418
general precautions, 1402
Handles, tool, insulating, 1501.5
Hatch, cargo, preparing, 0604.1
Hatchets, 1403
Hazard identification system, 2090.2
Health hazards, petroleum fuels, 2020
Hearing conservation, 0215
Hearing protection, aircraft, 0417.4
woodworking, 1108
Heat treating, 0962
Helicopter, starting engine, 0417.3
Hoists, construction, 0830
workmen's, 0830.1i
Hooks, 0824
Hose, fuel, preparation of, 0611.5
Hose, gas welding, 1027
stringing, 1029
Hose, watch, fuel loading, 0612.1
Hot work, definitions, 2070.2
Housekeeping, foundries, 0936
aviation, 0403
garages, 0520
general, 0201-0205
laboratories, 1701.4
machine shops, 0902
photographic laboratory, 1802.3
sawmills, 1125
sewage and water treatment plants, 1221
Hydraulic fluid, fire resistant, 2060
Hydraulic lifts, motor vehicle, 0524.4b
Hygiene, general, 0210-0217
wash and locker rooms, 0217

I

Illumination, general, 0213
recommended levels, 0213.4
Indicator, carbon monoxide, 2078.4
combustible gas, 2078.3
Inert-gas, metal-arc welding, 1039
Insulating floor covering, electrical, 1501.3
Iron, hand, laundry, 1921.5f
puff, tailor shop, 1916.2b

J

Jacks, excavation, 0885
motor vehicles, 0524.4a
Jet assisted take-offs, aircraft, 0425
Jointers, wood, 1114
JP-5 fuel, 2022

K

Ketones, 2055.5
Kettle, steam-jacketed, 1907.2j
Knife, bolo, 1418
Knives, draw, woodworking, 1116
jointer, 1114.1
woodworking, 1105.1

L

Labeling, hazardous materials, 2085-2091
design, 2090
responsibilities, 2087
Labels, hazardous materials, availability, 2089
Laboratories, 1701-1708
Laboratory, equipment, 1703
glassware, 1704
illumination, 1703.2
ovens, 1703.6
Ladder jacks, 0836.21
Ladders, 0835
extension, 0835.6
fixed, 0835.5
metal, 0835.2h
office, 0204.9
step, 0835.7
trestle, 0835.9
use, 0835.3
Lasers, 1550-1556

Lathes, 0915
profile and swing-head, 1115
Laundry, equipment, 1921.5
exchange, 1921
Lead, 2057.4
Life preservers, 0621; 0633.1
Life rings, 0620; 0633.2
Lifts, hydraulic, motor vehicle, 0524.4b
Lighting, construction site, 0806
in hangars, 0404
Liquid oxygen, aircraft, 0420
Loaders, excavation, 0883
Locomotive inspection, 0502.1
Locomotive, diesel-electric, 0502.5
internal-combustion, 0502.4
storage-battery, 0502.3
Lumber, piling, construction site, 0810.2

M

Machete, 1418
Machine guards, 0904
Machine, office, 0204.6; 0204.10
Machine shops, 0901-0908
operating precautions, 0907
repairing, machinery, 0906
wiring, 0908
Machine tools, 0915-0928
Machinery, main, 0701-0706
electrical installations, 0705
remotely controlled, 0706
Machinery, rubber making, 0924
Machines, tenoning, wood, 1113
woodworking, 1110-1119
Magnesium alloys, melting and machining, 0961
Mandatory precautions, 0102.2
Mangle, laundry, 1921.5d
Manifolds, portable, gas welding, 1025
Manual handling, materials, 0303
Markings, danger, airfield, 0406.1
closed target, 0406.2
Materials handling, 0301-0304
construction site, 0810
vehicles, 0320-0322
Meat grinder, electric, 1906.4b
Meat saw, power, 1906.4a
Meat slicing machines, 1906.4d
Mechanical handling, materials, 0304
Medical facilities, 1601-1603
Mercury, 2057.5
Mercury, in laboratories, 1708.2a
Mess equipment, use and care of, 1908.1
Messing, facilities, 1907-1910
Metal treatments, 0960-0964
Metals, 2057
Methyl alcohol, 2055.4a
Methyl chloroform, 2055.3b(2)
Methyl ethyl ketone, 2055.5
Methyl isobutyl ketone, 2055.5
Milling machines, 0916
Mobile service/support equipment, passengers on, 0412
Molding, foundry, 0939
Molding machine, wood, 1115
Mortising, machines, 1117
Motor, electric, series-wound, 1519
Motor vehicle operator's qualifications, 0511
Motor vehicles, 0510-0525
backing, 0512.7
definitions, 0510
emergency and safety equipment, 0513
fire extinguishers, 0513.3
fueling, 0514.3; 0525
gears and brakes, 0514.1
overtaking, 0512.5
parking, 0512.8
railroad crossings, 0512.9
repairing, 0524
right-of-way, 0512.6
rules on the road, 0512
safe following distance, 0512.3
safety for riders, 0516
seat belts, 0513.4
servicing, 0524
special types, 0515
speed regulations, 0512.1
towing, 0514.2
traffic control, 0512.10
turning, 0512.4

N

Navy exchange, 1902
Nets, safety, steel erection, 0815.4
Nozzles, automatic fuel dispensing, 0525.3c

O

Office, machines, 0204.5, .6, .10
safety, 0204
Ordnance, aviation, 0421
Ovens, galley, 1907.2c
laboratory, 1703.6
Oxygen, cylinders, 1022
liquid, aircraft, 0420
Oxygen concentrations, measuring, 2078.2

P

Paint mixing, 1310.1
Paint removal with torch, 1304
Paint storage, 1303
Painters, medical examinations, 1311.1
Painting, general, 1301-1305
Painting procedures, air station, 0415
Paper cutter, photolab, 1802.2
Paving breakers, pneumatic, 0889
Paving and concrete equipment, 0831
Perchloric acid, 1708.2b
Perchloroethylene, 2055.3b(3)
Pest control, 0216
Petroleum fuels, 2010-2022

Petroleum naphtha, 2055.1b
Photoflash bombs, 1805.5
Photographic chemicals, 1806
Photographic laboratory, 1802
Photography, 1801-1806
  applicable precautions, 1801
Pickaxes, 1412
Pier inspection, 0603.1
Pile driving, 0890
Pins, drift, 1405.8
Pipe, cutters, 1409
  handling, 1207
  wrenches, 1206
Pipelines, air-compressor, 1215
Pipes, frozen, thawing of, 1212
Pipework, new, 1214
Piping and plumbing, 1201-1217
  in water treatment plants, 1235
  systems, identification of, 1213
  repair, 1208
  work on, 1202
Pits, motor vehicle, 0524.4
Planers, metal, 0917
Planing machines, wood, 1115
Plants, poisonous, 0873
Plastic coatings, 1313
Plastic dusts, 2056.1
Plastics, 2056
Plastics, foamed, 2056.3
Plating shops, aircraft, 0415
Pliers, 1410
Pneumatic rock drills, 1428
Pneumatic tools, 1427
Poles, electric power line, working on, 1533
Portable power tools, 1425-1433
Posting safety precautions, 0103.1
Potassium cyanide, case hardening, 0955
Potassium, metallic, in laboratories, 1708.2c
Potato peeler, 1907.2e
Powder actuated tools, 1431
Power presses, 0928
Precautions, advisory, 0102.2
Precautions, mandatory, 0102.2
Pre-rinsing machine, scullery, 1909.2a
Presses, forging, 0952
Pressing machine, laundry, 1921.5e
  tailor shop, 1916.2a
Pressure cooker, 1907.2k
Pressure vessels, unfired, 0735-0736
Propellant fuels and oxidizers, 2030
Protective clothing, abrasive blasting, 1321
  acids and alkalies, 2005.2a
  arc welding, 1036.3
  asphalt, 0831.3c
  batteries, 1520.1c(1)
  boilers, 0725.3c; 0726.1a
  case hardening, 0955.3
  commissary, 1901.4; 1904.1b
  concrete, 0814.1b; 0814.2g
  construction, 0805
Protective clothing, *continued*
  demolition, 0840.6, .9
  diesel shops, 0507.1c
  dipping, forge shop, 0954.4
  drill presses, 0918.6
  electricity, 1501.2
  electroplating, 0964.3
  forges, 0950; 0953.2
  foundry furnaces, 0940.2, .5
  fuel handling, 2017.4
  garage, 0521
  grinding wheel, 0926.2
  hammers, power, 1429.6
  inert-gas welding, 1039.3
  laboratories, 1702
  liquid oxygen, 0420.5
  machine shops, 0903
  materials handling, 0302
  metal saws, 0920.1
  molding and core making, 0939.1
  painting, 1311.2-5; 1312.3; 1313.2
  photolab, 1802.5
  pickling, 0963
  plumbing, 1204; 1207.1
  poisonous plants, 0873.2
  portable circular saws, 1110.10b
  rust preventive compounds, 1314.4
  sand mills, 0938.1
  sawmills, 1126
  sewage and water treatment plants, 1223
  shapers, 1112.11
  steel erection, 0815.1a-b
  transformers, 1515.1a
  welding, 1010-1011
Pumps, centrifugal, 0711
  main machinery, 0710-0712
  propeller, 0711
  reciprocating, 0710
  rotary, 0711
Punches, 1405.8
Punch presses, 0928
Purpose of publication, 0101

R

Radar, aircraft, 0422.9
Radio frequency circuits, 1542.1
  radiation hazards, 1543.1
    to flammable vapors, 1543.2
    to ordnance, 1543.3
    to personnel, 1543.4
Radioactive materials, 2059
  in laboratories, 1708.1e
  with radiac, 1547
Railroad cars, unloading, 0506
Railroad crossings, motor vehicles at, 0512.9
Railroad engines on turntables, 0507.6
Railroad equipment, limits on riders, 0501.2a
  safety on boarding, 0501.3; 0507
Railroads, 0501-0507
  composition of crew, 0501.1

Railroads, *continued*
fire prevention, 0503
operating precautions, 0505
shop safety, 0507
signals, 0504
warning signs in shops, 0507.4
Ramps, excavation, 0886
Ranges, galley, 1907.2c
Rasps, 1407
Receivers, compressed air, 0736
Receiving room, commissary, 1904
Refrigerants, leaks, 0222.3
toxic, 0222.2a
Refrigeration, 0222
Refrigeration plants, safety in, 0222.5
Refrigerator doors, 0222.5f
Refrigerators, commissary, 1906.5
Regulations, changes, 0102.4
Regulators, gas welding, 1024
Reporting, injury, 0103.3e
Reporting, unsafe conditions, 0103.3c
Respiratory protection, sewage and water treatment plants, 1226
welding, 1012
Responsibilities, commanding officers, 0103.1
individuals, 0103.3
supervisory personnel, 0103.2
Riders, motor vehicles, restrictions on, 0516.1
Riggers rules, 0820.5
Riveting, steel erection, 0815.2
Rock crushers, 0831.1
Rock drills, pneumatic, 1428
Rolls, forming, metal, 0925
Roofing brackets, 0836.22
Ropes, 0821
fiber, 0821.1
wire, 0821.2
Rubber gloves, electrical, 1501.2b(1)
Rubber making machinery, 0924
Rules of the road, motor vehicles, 0512
Rust preventive compounds, 1314

S

Safety equipment, sewage and water treatment plants, 1225
Salamanders, 0808
Sanding machines, 1118
disk, 1119.4
drum, 1119.3
Saw, meat, power, 1906.4a
Sawmills, 1125-1127
Saws, hand, 1411
metal, band, 0922
circular, 0921
general, 0920
portable, power, 1432
wood, band, 1111
circular, 1110
inverted swing cut-off, 1110.6
swing and sliding cut-off, 1110.5
Scaffolds, 0836
all-pole, 0836.2
barge, 0836.5
bricklayer's, 0836.6
carpenter's bracket, 0836.19
crawling boards or chicken ladders, 0836.20
definitions, 0836.1a
float, 0836.12
horse, 0836.17
independent pole, 0836.4
interior hung, 0836.13
lumber, 0836.1d
masons' swinging, 0836.14
nails, 0836.1f
needle-beam, 0836.15
outrigger, 0836.16
plasterers', 0836.18
precautions, 0836.1b
rolling, 0836.8
ropes and cables, 0836.1e
safe loads, 0836.1c
single-pole, 0836.3
suspended, 0836.9
suspended stage, 0836.10
tubular pole, 0836.7
window jack, 0836.23
School buses, 0515.1b
Scope of publication, 0102
Scrapers, clearing, 0876
Screwdrivers, 1413
Scullery, 1909
Scythe, 1418
Seatbelts, motor vehicles, 0513.4
Sewage plants, 1220-1235
Sewer maintenance, 1230
Sewer, work, 1203
deep, entering, 1231
Sewing machine, tailor shop, 1916.2c
Shapers, metal, 0917
wood, 1112
Shears, alligator, sheet metal, 0923.2
forge, 0952
hand, sheet metal, 0923.4
squaring, sheet metal, 0923.1
Sheet-metal work, 0923
Shock, electrical, special precautions, 1501.11
resuscitation, 1501.12
Shovels, hand, 1412
power, 0884
Sickle, hand, 1418
Side cutters, 1410
Sight conservation, 0214
Signals, railroads, 0504
Silicosis, 2058.1
Slicing machine, meat, 1906.4d
Sludge holders, purging, 1232
Sodium cyanide, case hardening, 0955
Sodium, metallic, in laboratories, 1708.2c

Solvents, 2055
chlorinated hydrocarbon, 2055.3
paint, 1316
Sonar, hazards to divers and swimmers, 1549
Spades, 1412
Sparks from tools, fuels, 2017.8
Speed limits, ambulances, 0515.2d
fire apparatus, 0515.3c
school buses, 0515.1b(1)
Spotting, drycleaning, 1917.5c
Spontaneous ignition, coal, 2036
petroleum fuels, 2017.9
Spray, booths, 1312.9
painting, 1312
ventilation, 1312.2
Stacking materials, warehouse storage, 0311
Stairs, 0202.6
Static electricity, in fuel handling, 2017.5
Steam engine reciprocating, 0704
Steam lines, breaking flange joints, 1208.8
open ends, 1208.8c
Steamtable, mess, 1908.1a
Steel construction, demolition, 0849
Steel erection, 0815
Stockroom, commissary, 1903
Stoddard solvent, 2055.1a
Storage, chemicals, laboratory, 1707
photographic, 1806.3
coal, 2036
compressed gases, 2045-2046
construction site, 0810
exchange, merchandise, 1903
fuel, petroleum, 2013
paint, 1303
pipe, 1207.3, .4
rope, weight handling, 0821.1c, .2c
warehouse, 0310-0313
Stoves, construction site, 0807.3
Stowage, deck, 0605.4
Straddle trucks, 0322
Switches, electrical, 1514
securing, 1511

T

Tailor shop, exchange, 1916
machines, 1916.2
Take-offs, jet assisted, aircraft, 0425
Tanks, aircraft, fueling, 0411.6
cabin, 0411.9
Tanks, compressed air, 0735
Tanks, fuel, entering, 2020.6
freeing vapor from, 2015.6
storage, 2013
ventilation, 2015.7
gasoline, boat, 0636.4
filling, 2021.10
lead contaminated, 2020.3
sewage and water treatment, 1222
Taxiing, aircraft, 0407.2
Tenoning machines, 1113
Threading dies, hand, 1414
Threshold limit values, 2003.2a
Tire, installation, motor vehicle, 0524.8
Toilet facilities, temporary, 0803
Toluene, 2055.2b
Tolylene diisocyanate, 2056.3
Tool handles, insulating, 1501.5
Tools, forge, 0951
garage, 0523
general, 0203
hand, 1401-1418
live-line, 1525.4c(2)
machine, 0915-0928
plumbing, 1205;1206
pneumatic, 1427
portable power, 1425-1433
powder actuated, 1431
Torches, gas welding, 1026
liquefied petroleum gas, 1217
Towing, motor vehicles, 0514.2
trailers, 0515.4c
Tractors, 0874
Traffic control, motor vehicles, 0512.10
Trailers, 0515.4
Trains, tractor trailer, 0323
Transformers, working on, 1515
Transporting explosives, 0517
Trees, felling and trimming, 0871
Trenches, 0887
Triaryl phosphate, 2060
Trichloroethylene, 2055.3b(3)
Tricresyl phosphate, 2060.1
Trucks and trailers, 0515.4
Trucks, dump, repairs, 0524.3
fork, 0321
straddle, 0322
Tubes, cathode-ray, 1546
electron, containing radioactive materials, 1548
Tumbler, drycleaning, 1917.4f
laundry, 1921.5c
Typewriters, 0204.5

U

Unfired pressure vessels, 0735

V

Valve, safety device, compressed gases, 2041
stems, piping, 1209
Valves, compressed gas cylinders, 2043.2
cylinder, gas welding, 1023
relief, main machinery, 0702
sea, inspection of, 1210
stationary boiler, 0726.4
Vegetable chopper, 1907.2d
Vending machine, mess, 1908.1e
Ventilating equipment, sewage and water treatment plants, 1227

Ventilation, buildings, 0212
paint dipping, 1315.2
power boats, 0635.2c
spray painting, 1312.2
welding, 1046-1051
Vessels, pressure, unfired, 0735

W

Warehouse, fire prevention, 0313
Warehouse storage, 0310-0313
Warning signs, abrasive blasting, 1325.1c
acids and chemicals, 2005.1a
aircraft, arresting gear, 0423.2b
catapults, 0424
fueling, 0418.1a
no-smoking, 0402.3b
propellers, 0417.1a
airfield, 0406
coal cars, unloading, 2035.1b
demolition areas, 0841
electricity, 1501.10
excavation, 0881.2
foundry furnaces, 0940.3
garage, 0520.4
heat treating, 0962.3d
high voltage lines, 0809.10c
lasers, 1552.4
motor vehicles, disabled, 0513
paper cutters, 1802.2
radio-frequency, 1541
railroad cars, unloading, 0506.3
railroad shops, 0507.4
road construction, 0831.4f
sewage and water treatment plants, 1229
transporting explosives, 0517.3d
trucks, 0515.4b(4)
Wash and locker rooms, hygiene, 0217
Washer, laundry, 1921.5a
Washing machine, drycleaning, 1917.4c
Watch repair shop, exchange, 1920
Water safety, 0620-0621
Water treatment plants, 1220-1235
Weight handling equipment, 0820-0831
color code, 0820.3o
operator qualifications, 0820.3a
principal accident causes, 0820.2
signals, 0820.4
Welding, aloft, 1003.3
apparatus, 1006
certification of closed compartments, 1054
Welding, *continued*
explosive fumes, 1053
eye protection, 1011
fire extinguishing equipment, 1007
fire watch, 1003.5
galvanized steel, brass, or bronze, 1052
gas, 1020-1029
gas, cylinders, 1020-1021
general, 1001-1007
hazards, 1004
hollow parts, 1005
in confined spaces, 1045-1054
near boatswain's chair, 0836.12b
near needle-beam scaffolds, 0836.15 l
on scaffolds, 0836.1e(9)
on shipboard, 1028
protective clothing, 1010
respiratory protection, 1012
steel erection, 0815.1c
Well drilling, 0891
Wheelbarrows, construction, 0811
Wheels, grinding, portable, 1433
Whetstones and steels, 1415
Wire rope, 0821.2
Woodworking, areas, 1103
defective equipment, 1104
dust control, 1107
general, 1101-1108
machines, 1110-1119
universal, 1119
personnel instruction, 1102
safety equipment, 1106
Wrecking bars, 1416
Wrenches, hand, 1417
power, 1430

X

X-ray, department, medical facilities, 1602
equipment, installation and care of, 1602.2
film, storage of in anesthetic room, 1602.2c
film, storage of, 1602.2d
protection from direct radiation, 1602.3
radiation hazards, 1544
Xylene, 2055.2b

Z

Zinc, 2057.6

U. S. GOVERNMENT PRINTING OFFICE : 1974 O - 564-350