CONTINUED ON SHEET 2

PC NO.	NAME	REFNO.	PC NO.	ZONE	MATERIAL	IDENTIFYING NO. OR SPECIFICATION	ZONE	REMARKS
~~51~~	~~CONNECTING ROD LH HANDLE SIDE~~				~~SST~~	~~ASTM A276 TYPE 316, COND A~~	~~84-A~~	
~~50~~	~~CONNECTING ROD RH HANDLE SIDE~~				~~SST~~	~~ASTM A276 TYPE 316, COND A~~	~~84-A~~	
~~49~~	~~CONNECTING ROD LH HANDLE SIDE~~				~~STL~~	~~ASTM A 108, CR 1018~~	~~103-A~~	~~CF, ZINC PLATED NOTE 38 REF 2~~
48	CONNECTING ROD ~~RH~~ HANDLE SIDE	–	–	–	SST	ASTM-A276 TYPE 316 COND A	103-A	~~CF, ZINC PLATED NOTE 38 REF 2~~
~~47~~	~~CONNECTING ROD LH HANDLE SIDE~~				~~STL~~	~~ASTM A 108, CR 1018~~	~~111-A~~	~~CF, ZINC PLATED NOTE 38 REF 2~~
46	CONNECTING ROD ~~RH~~ HANDLE SIDE	–	–	–	SST	ASTM-A276 TYPE 316 COND A	111-A	~~CF, ZINC PLATED NOTE 38 REF 2~~
~~45~~	~~CONNECTING ROD LH HANDLE SIDE~~				~~STL~~	~~ASTM A 108, CR 1018~~	~~84-A~~	~~CF, ZINC PLATED NOTE 38 REF 2~~
44	CONNECTING ROD ~~RH~~ HANDLE SIDE	–	–	–	SST	ASTM-A276 TYPE 316 COND A	84-A	~~CF, ZINC PLATED NOTE 38 REF 2~~
~~43~~	~~CONNECTING ROD LH HANDLE SIDE~~				~~STL~~	~~ASTM A 108, CR 1018~~	~~95-A~~	~~CF, ZINC PLATED NOTE 38 REF 2~~
42	CONNECTING ROD ~~RH~~ HANDLE SIDE	–	–	–	SST	ASTM-A276 TYPE 316 COND A	95-A	~~CF, ZINC PLATED NOTE 38 REF 2~~
~~41~~	~~CONNECTING ROD LH HANDLE SIDE~~				~~STL~~	~~ASTM A 108, CR 1018~~	~~87-A~~	~~CF, ZINC PLATED NOTE 38 REF 2~~
40	CONNECTING ROD ~~RH~~ HANDLE SIDE	–	–	–	SST	ASTM-A276 TYPE 316 COND A	87-A	~~CF, ZINC PLATED NOTE 38 REF 2~~
~~39~~	~~CONNECTING ROD LH HANDLE SIDE~~				~~STL~~	~~ASTM A 108, CR 1018~~	~~101-A~~	~~CF, ZINC PLATED NOTE 38 REF 2~~
38	CONNECTING ROD ~~RH~~ HANDLE SIDE	–	–	–	SST	ASTM-A276 TYPE 316 COND A	101-A	~~CF, ZINC PLATED NOTE 38 REF 2~~
~~37~~	~~CONNECTING ROD LH HANDLE SIDE~~				~~STL~~	~~ASTM A 108, CR 1018~~	~~108-A~~	~~CF, ZINC PLATED NOTE 38 REF 2~~
36	CONNECTING ROD ~~RH~~ HANDLE SIDE	–	–	–	SST	ASTM-A276 TYPE 316 COND A	108-A	~~CF, ZINC PLATED NOTE 38 REF 2~~
~~35~~	~~CONNECTING ROD LH HINGE SIDE~~				~~STL~~	~~ASTM A 108, CR 1018~~	~~82-A~~	
~~34~~	~~CONNECTING ROD RH HINGE SIDE~~				~~STL~~	~~ASTM A 108, CR 1018~~	~~82-A~~	
~~33~~	~~CONNECTING ROD LH HINGE SIDE~~				~~STL~~	~~ASTM A 108, CR 1018~~	~~109-A~~	~~CF, ZINC PLATED NOTE 38 REF 2~~
32	CONNECTING ROD ~~RH~~ HINGE SIDE	–	–	–	SST	ASTM-A276 TYPE 316 COND A	109-A	~~CF, ZINC PLATED NOTE 38 REF 2~~
~~31~~	~~CONNECTING ROD LH HINGE SIDE~~				~~STL~~	~~ASTM A 108, CR 1018~~	~~82-A~~	~~CF, ZINC PLATED NOTE 38 REF 2~~
30	CONNECTING ROD ~~RH~~ HINGE SIDE	–	–	–	SST	ASTM-A276 TYPE 316 COND A	83-A	~~CF, ZINC PLATED NOTE 38 REF 2~~
~~29~~	~~CONNECTING ROD LH HINGE SIDE~~				~~STL~~	~~ASTM A 108, CR 1018~~	~~93-A~~	~~CF, ZINC PLATED NOTE 38 REF 2~~
28	CONNECTING ROD ~~RH~~ HINGE SIDE	–	–	–	SST	ASTM-A276 TYPE 316 COND A	93-A	~~CF, ZINC PLATED NOTE 38 REF 2~~
~~27~~	~~CONNECTING ROD LH HINGE SIDE~~				~~STL~~	~~ASTM A 108, CR 1018~~	~~86-A~~	~~CF, ZINC PLATED NOTE 38 REF 2~~
26	CONNECTING ROD ~~RH~~ HINGE SIDE	–	–	–	SST	ASTM-A276 TYPE 316 COND A	86-A	~~CF, ZINC PLATED NOTE 38 REF 2~~
~~25~~	~~CONNECTING ROD LH HINGE SIDE~~				~~STL~~	~~ASTM A 108, CR 1018~~	~~100-A~~	~~CF, ZINC PLATED NOTE 38 REF 2~~
24	CONNECTING ROD ~~RH~~ HINGE SIDE	–	–	–	SST	ASTM-A276 TYPE 316 COND A	100-A	~~CF, ZINC PLATED NOTE 38 REF 2~~
~~23~~	~~CONNECTING ROD LH HINGE SIDE~~				~~STL~~	~~ASTM A 108, CR 1018~~	~~106-A~~	~~CF, ZINC PLATED NOTE 38 REF 2~~
22	CONNECTING ROD ~~RH~~ HINGE SIDE	–	–	–	SST	ASTM-A276 TYPE 316 COND A	106-A	~~CF, ZINC PLATED NOTE 38 REF 2~~
~~21~~	~~CONNECTING LINK LH HANDLE SIDE~~				~~STL~~	~~ASTM A 108, CR 1018~~	~~98-A~~	~~CF, ZINC PLATED NOTE 38 REF 2~~
20	CONNECTING LINK ~~RH~~ HANDLE SIDE	–	–	–	SST	ASTM-A276 TYPE 316 COND A	98-A	~~CF, ZINC PLATED NOTE 38 REF 2~~
~~19~~	~~CONNECTING LINK LH HANDLE SIDE~~				~~STL~~	~~ASTM A 108, CR 1018~~	~~98-A~~	~~CF, ZINC PLATED NOTE 38 REF 2~~
18	CONNECTING LINK ~~RH~~ HANDLE SIDE	–	–	–	SST	ASTM-A276 TYPE 316 COND A	98-A	~~CF, ZINC PLATED NOTE 38 REF 2~~
17	CONNECTING LINK HINGE SIDE	–	–	–	SST	ASTM-A276 TYPE 316 COND A	91-A	~~CF, ZINC PLATED NOTE 38 REF 2~~
16	CONNECTING LINK HINGE SIDE	–	–	–	SST	ASTM-A276 TYPE 316 COND A	91-A	~~CF, ZINC PLATED NOTE 38 REF 2~~
15	CONNECTING LINK HINGE SIDE	–	–	–	SST	ASTM-A276 TYPE 316 COND A	90-A	~~CF, ZINC PLATED NOTE 38 REF 2~~
14	CONNECTING LINK HINGE SIDE	–	–	–	SST	ASTM-A276 TYPE 316 COND A	90-A	~~CF, ZINC PLATED NOTE 38 REF 2~~
13	CONNECTING LINK HANDLE SIDE	–	–	–	SST	ASTM-A276 TYPE 316 COND A	90-A	~~CF, ZINC PLATED NOTE 38 REF 2~~
12	CONNECTING LINK HANDLE SIDE	–	–	–	SST	ASTM-A276 TYPE 316 COND A	90-A	~~CF, ZINC PLATED NOTE 38 REF 2~~
~~11~~	~~GRAB HANDLE INSIDE~~				~~STL~~	~~ASTM A36~~	~~79-A~~	~~LG = TO SUIT~~
10	GRAB HANDLE INSIDE	–	–	–	SST	ASTM-A276 TYPE 316, COND A	79-A	LG = TO SUIT
~~9~~	~~GRAB HANDLE OUTSIDE~~				~~STL~~	~~ASTM A36~~	~~77-A~~	
8	GRAB HANDLE OUTSIDE	–	–	–	SST	ASTM-A276 TYPE 316, COND A	78-A	
~~7~~	~~LABEL PLATE BACKING~~				~~SST~~	~~ASTM A240 TYPE 316, COND A~~	~~71-A~~	
~~6~~	~~LABEL PLATE BACKING~~				~~STL~~	~~ASTM A569~~	~~71-A~~	~~HR, CQ~~
5	LABEL PLATE	–	–	–	AL ALY	MIL-P-15024 TYPE H	71-B	
~~4~~	~~LABEL PLATE~~				~~CRES~~	~~MIL-P-15024 TYPE A OR B~~	~~71-B~~	
~~3~~	~~GASKET~~				~~RUBBER CLOTH COV~~	~~MIL-G-17927~~	~~87-E~~	~~LG = TO SUIT NOTE 10 REF 2~~
2	GASKET	–	–	–	SILICONE RUBBER	ZZ-R-765 CLASS 3B, GRADE 30	86-F	LG = TO SUIT NOTE 10 REF 2
~~1~~	~~GASKET~~				~~RUBBER~~	~~MIL-R-900~~	~~86-F~~	~~LG = TO SUIT NOTE 10 REF 2~~

PARTS LIST △A

ASSEMBLY LETTER	QUANTITY PER ASSEMBLY
NN	
MM	
LL	
KK	
JJ	
II	
HH	
GG	
FF	
EE	
DD	
CC	
BB	
AA	
Z	
Y	
X	
W	
V	
U	
T	
S	
R	
Q	
P	
O	
N	
M	
L	
K	
J	
I	
H	
G	
F	
E	
D	
C	
B	
A	

DOG ASSY

ASSY A	RH REGULAR
ASSY B	LH REGULAR
ASSY C	RH LONG SPINDLE
ASSY D	LH LONG SPINDLE
ASSY E	RH STAINLESS STEEL
ASSY F	LH STAINLESS STEEL

OPERATING HANDLE ASSY

ASSY G	RH REGULAR
ASSY H	LH REGULAR
ASSY I	RH REGULAR MOD
ASSY J	LH REGULAR MOD
ASSY K	RH LONG SPINDLE
ASSY L	LH LONG SPINDLE
ASSY M	RH LONG SPINDLE
ASSY N	LH LONG SPINDLE
ASSY O	RH LONG SPINDLE MOD
ASSY P	LH LONG SPINDLE MOD
~~ASSY Q~~	~~RH STAINLESS STEEL~~
~~ASSY R~~	~~LH STAINLESS STEEL~~

HINGE ASSY △A

ASSY S	RH LOW TYPE ~~SST~~
ASSY T	LH LOW TYPE ~~SST~~
ASSY U	RH HIGH TYPE ~~SST~~
ASSY V	LH HIGH TYPE ~~SST~~
ASSY W	RH LOW TYPE MOD ~~SST~~
ASSY X	LH LOW TYPE MOD ~~SST~~
~~ASSY Y~~	~~RH LOW TYPE SST~~
~~ASSY Z~~	~~LH LOW TYPE SST~~
~~ASSY AA~~	~~RH HIGH TYPE SST~~
~~ASSY BB~~	~~LH HIGH TYPE SST~~
ASSY OO	RH LOW TYPE
ASSY PP	LH LOW TYPE
ASSY QQ	RH HIGH TYPE
ASSY RR	LH HIGH TYPE
ASSY SS	RH LOW TYPE MOD
ASSY TT	LH LOW TYPE MOD

HASP ASSY

ASSY CC	OUTSIDE TYPE
ASSY DD	INSIDE TYPE RH
ASSY EE	INSIDE TYPE LH
ASSY FF	INSIDE TYPE RH
ASSY GG	INSIDE TYPE LH
ASSY HH	INSIDE TYPE RH
ASSY II	INSIDE TYPE LH

FIXED LIGHT ASSY △A

ASSY JJ	4 DIA SST
~~ASSY KK~~	~~4 DIA SST~~

HOOK ASSY

ASSY LL	HOOK & STAPLES

BUMPER ASSY △A

ASSY MM	BUMPER SST
~~ASSY NN~~	~~BUMPER SST~~

ABBREVIATIONS

AL	ALUMINUM
ALY	ALLOY
BRZ	BRONZE
CF	COLD FINISHED
CMPSN	COMPOSITION
CQ	COMMERCIAL QUALITY
CRES	CORROSION RESISTANT STEEL
HR	HOT ROLLED
PLD	PLATED
PH	PHOSPHOR
RDH	ROUNDHEAD
SST	STAINLESS STEEL
STL	STEEL

REVISIONS

ZONE	REV	DESCRIPTION	DATE	APPROVED
		DRAWING COMPLETELY REDRAWN.		
1-A		ADDED NOTE "FOR NEW CONSTRUCTION AND DOOR REPLACEMENT ONLY".		
2-B 78-E		DELETED ASSY NN FROM BUMPER ASSY.		
2-C 74-D		DELETED ASSY KK FROM FIXED LIGHT ASSY.		
2-D		DELETED GENL NOTE 2.		
2-E		ADDED ASSY OO THRU TT TO HINGE ASSY.		
8-A		DELETED ASSY Y THRU BB, KK AND NN.		
16-A				
24-A				
32-A				
58-A				
59-C				
4-A	A	DELETED PC NOS 1, 3, 4, 6, 7, 9, 11, 19, 21, 23, 25, 27, 29, 31, 33 THRU 35, 37, 39, 41, 43, 45, 47 AND 49 THRU 51.		
71-B		DELETED DETAIL 72-A.		
72-A		CHANGED SPEC FOR PC NO. 2 TO ZZ-R-765 CLASS 3B, GRADE 30, WAS ZZ-R-765 CLASS 2B, GRADE 40.		
77-A		CHANGED MATL. SPEC AND DELETED REMARKS FOR PC NOS 12 THRU 33 AND 36 THRU 49 TO SST, WAS ASTM-A276 TYPE 316 COND A; NOTE 2 REF 1, WAS STL, ASTM A108, GR 1018, CF, ZINC PLATED NOTE 38 REF 2.		
78-A		DELETED RH FROM NAME OF PC NOS 18, 20, 22, 24, 26, 28, 30, 32, 36, 38, 40, 42, 44, 46 AND 48.		
79-A		CHANGED ZONE FOR PC NO. 30 TO 83-A, WAS 82-A.		
83-A				
84-A				
86-A				
86-F				
87-A				
87-E				
93-A				
95-A				
98-A				
100-A				
101-A				
103-A				
106-A				
108-A				
109-A				
111-A				

(CONTINUED ON SHEET 2)

CAD MAINTAINED, CHANGES SHALL BE INCORPORATED BY THE DESIGN ACTIVITY.

GENERAL NOTES:

1. SEE NOTES 1, 4, 5, 8, 9, 15, 25, 27, 38, 39, 40, 51, 54, 57, 61, 62 & 63 ON REF 2 FOR ADDITIONAL APPLICABLE NOTES.

△A ~~2. THE FOLLOWING BEARING SHALL BE AS MANUFACTURED BY KAMATICS CORPORATION, BLOOMFIELD, CT WITH KARON-B LINER OR EQUAL:~~

~~PC NO.~~	~~KAMATICS PART NO.~~
~~81~~	~~KJD296312B~~
~~82~~	~~KJD296412B~~
~~83~~	~~KJD296512B~~
~~97~~	~~KJD239816B~~
~~98~~	~~KJD286816B~~
~~99~~	~~KJD239716B~~
~~134~~	~~KJD286916B~~

~~SEE NOTE 61 ON REF 2.~~

3. SEAL, PC 100, SHALL BE G-T RING PART NO. 121-12000-173-0170 AS MANUFACTURED BY GREEN, TWEED & CO., KULPSVILLE, PA OR EQUAL. SEE NOTE 62 ON REF 2.

4. TEST PRESSURE FOR FIXED LIGHT, ASSEMBLIES JJ & KK, SHALL BE SAME AS TEST PRESSURE FOR DOOR IN WHICH INSTALLED AND SHOULD NOT EXCEED THE MAXIMUM TEST PRESSURE OF 30 PSI.

5. PRIOR TO ASSEMBLY, APPLY A THIN COAT OF SILICONE GREASE TO SPINDLE SHAFT (PC. NO. 95 & 96) AND OUTER DIAMETER OF BUSHINGS (PC. NO. 97, 98 & 99) AND APPLY A BEAD OF ADHESIVE/SEALANT AROUND INSIDE CORNER OF FLANGE/O.D. INTERSECTION OF PC NO. 99.

(CONTINUED ON SHEET 4)

NO.	TITLE	CAGE CODE	DWG NO.
2	DOORS, HATCHES & SCUTTLES GENERAL NOTES	80064	803-2226372
1	DOORS, WATERTIGHT, QUICK ACTING ARRANGEMENT	53711	803-6397268

REFERENCES

DISTRIBUTION: APPROVED FOR PUBLIC RELEASE; DISTRIBUTION IS UNLIMITED.

SUPERSEDES DWG NO.

805-1400051	805-1400054
805-1400052	805-1400055
805-1400053	805-1623406

FOR NEW CONSTRUCTION AND DOOR REPLACEMENT ONLY. △A

21	20	19	18	17	16	15	14	13	12	11	10	9	8	7	6	5	4	3	2	1	SH	REVISION STATUS OF SHEETS
A	A	A	A	A	A	A	A	A	A	A	A	A	A	A	A	A	A	A	A	A	REV	

DIMENSIONAL TOLERANCES UNLESS OTHERWISE SPECIFIED

MACHINED DIM	DEC	FRAC
UNDER 6	±0.010	±1/64
6 TO 24	±0.020	±1/32
OVER 24	±0.030	±1/16

DIM ARE IN INCHES

FILLETS & RADII TO BE ± 1/32

TOL ON ANGLES ± 0°30'

GEOMETRIC (WHERE IND) SYM	GEOMETRY	TOL
	FLAT & STR	AS NOTED
⊥	PERPENDICULAR	AS NOTED
//	PARALLELISM	AS NOTED
◎	CONCENTRICITY	AS NOTED

SYM IN ACCORDANCE WITH ANSI Y14.5

	SIGNATURE	DATE
PREPARED	J.T.BAILEY	2-26-88
CHECKED	P.R. HEMLER	3-30-88
HD ENGR	J. LOOHSTAMPFOR	4-6-88
NAVY APPROVAL		
PROJ ENGR	T. COSTANTINO	4-8-88
BR. HD	J. TURNER	4-8-88
DIV. DIR	M. PETZ	4-13-88
SUBGRP DIR	D.O. NEUMANN	4-14-88
APPD FOR COMNAVSEA	D.O. NEUMANN	4-14-88

DEPARTMENT OF THE NAVY — WASHINGTON, D.C. 20362-5101

NAVAL SEA SYSTEMS COMMAND

STANDARD DRAWING

DOORS WATERTIGHT, QUICK ACTING SUB-ASSEMBLIES & DETAILS

SIZE	CAGE CODE	ESWBS	DRAWING NO.	REV
F	53711	803	6397269	A

SCALE: NONE | MASS | SHEET 1 OF 21

DRAWING 803-6397269 SHEET 1 REV A

CONTINUED ON SHEET 3

ASSEMBLY LETTER / QUANTITY PER ASSEMBLY (PC NOS 93 THRU 52 HAVE NO QUANTITIES ENTERED)

PC NO.	NN	MM	LL	KK	JJ	II	HH	GG	FF	EE	DD	CC	BB	AA	Z	Y	X	W	V	U	T	S	R	Q	P	O	N	M	L	K	J	I	H	G	F	E	D	C	B	A
102																																			1	1	1	1	1	1
101																																			1	1	1	1	1	1
100																							2	2	2	2	2	2	2	2	2	2	2	2	1	1	1	1	1	1
99																																			1	1	1	1	1	1
98																																					1	1		
97																																			1	1			1	1
96																																					1	1		
95																																			1	1			1	1
94																																			1	1	1	1	1	1

PC NO.	NAME	DET ON REFNO.	DET ON PC NO.	DET ON ZONE	MATERIAL	IDENTIFYING NO. OR SPECIFICATION	ZONE	REMARKS
102	SOCKET HEADLESS SET SCREW	–	–	–	CRES	FF-S-200 TYPE I, STYLE 5	34-B	NO. 12-28UNF-3A LG=9/32, FULL DOG
101	O-RING	–	–	–	NITRILE	MS29513-121	33-C	1-1/16 ID X 1-1/4 OD 3/32 W
100	SEAL WITH TEFLON RINGS	–	–	–	NITRILE	AS 568A UNIFORM COML O-RING DASH NO. 120	33-C 44-E	1 ID X 1-3/16 OD 3/32 W, NOTE 3
99	FLANGED BEARING	–	–	–	316 SST	SAE AS 81934	35-C 35-D	SELF LUBRICATING NOTE 2
98	BEARING	–	–	–	316 SST	SAE AS 81934	34-C 35-E	SELF LUBRICATING NOTE 2
97	BEARING	–	–	–	316 SST	SAE AS 81934	35-C 36-E	SELF LUBRICATING NOTE 2
96	DOG SPINDLE	–	–	–	SST	ASTM-A276 TYPE 316, COND A	35-A 35-B	
95	DOG SPINDLE	–	–	–	SST	ASTM-A276 TYPE 316, COND A	35-B 36-A	
94	DOG	–	–	–	SST	ASTM-A473, TYPE 316	33-D 38-A	PICKLE AND PASSIVATE IAW ASTM A380
93	DOG STOP	–	–	–	STL	ASTM-A569	39-C	HR, CQ
92	COLLAR	–	–	–	NAVAL BRASS	ASTM-B21 ALY C48200, TEMPER H02	83-E	
91	STUD DOG LEVER/CONN ROD	–	–	–	SST	ASTM-A276 TYPE 316, COND A	81-A	
90	STUD CONN ROD/CONN ROD	–	–	–	SST	ASTM-A276 TYPE 316, COND A	81-A	
89	STUD TOGGLE LINK/DOG LEVER	–	–	–	SST	ASTM-A276 TYPE 316, COND A	81-A	
88	STUD OPERATING HANDLE	–	–	–	SST	ASTM-A276 TYPE 316, COND A	81-A	
87	STUD CONNECTING ROD	–	–	–	SST	ASTM-A276 TYPE 316, COND A	81-A	
86	STUD CONNECTING ROD	–	–	–	SST	ASTM-A276 TYPE 316, COND A	81-A	
85	STUD DOG LEVER	–	–	–	SST	ASTM-A276 TYPE 316, COND A	81-A	
84	STUD-TOGGLE LINK & OPR HANDLE	–	–	–	SST	ASTM-A276 TYPE 316, COND A	81-A	
83	BEARING-TOGGLE LINK & OPR HANDLE	–	–	–	316 SST	~~MIL-B-81934~~ SAE AS 81934	81-E	SELF LUBRICATING NOTE 2
82	BEARING DOG LEVER	–	–	–	316 SST	~~MIL-B-81934~~ SAE AS 81934	81-E	SELF LUBRICATING NOTE 2
81	BEARING CONNECTING ROD	–	–	–	316 SST	~~MIL-B-81934~~ SAE AS 81934	81-E	SELF LUBRICATING NOTE 2
80	CONNECTOR TOGGLE LINK	–	–	–	SST	ASTM-A276 TYPE 316, COND A	93-E	~~CF, ZINC PLATED NOTE 38 REF 2~~
79	CONNECTING ROD TOGGLE LINK	–	–	–	SST	ASTM-A276 TYPE 316, COND A	95-E	~~CF, ZINC PLATED NOTE 38 REF 2~~
~~78~~	~~TOGGLE LINK LH~~	~~–~~	~~–~~	~~–~~	~~SST~~	~~ASTM A276 TYPE 316, COND A~~	~~97-E~~	
~~77~~	~~TOGGLE LINK RH~~	~~–~~	~~–~~	~~–~~	~~SST~~	~~ASTM A276 TYPE 316, COND A~~	~~97-E~~	
76	TOGGLE LINK LH	–	–	–	SST	ASTM-A276 TYPE 316, COND A	97-E	~~CF, ZINC PLATED NOTE 38 REF 2~~
75	TOGGLE LINK RH	–	–	–	SST	ASTM-A276 TYPE 316, COND A	97-E	~~CF, ZINC PLATED NOTE 38 REF 2~~
74	TOGGLE LINK LH	–	–	–	SST	ASTM-A276 TYPE 316, COND A	101-E	~~CF, ZINC PLATED NOTE 38 REF 2~~
73	TOGGLE LINK RH	–	–	–	SST	ASTM-A276 TYPE 316, COND A	101-E	~~CF, ZINC PLATED NOTE 38 REF 2~~
72	TOGGLE LINK LH	–	–	–	SST	ASTM-A276 TYPE 316, COND A	99-E	~~CF, ZINC PLATED NOTE 38 REF 2~~
71	TOGGLE LINK RH	–	–	–	SST	ASTM-A276 TYPE 316, COND A	99-E	~~CF, ZINC PLATED NOTE 38 REF 2~~
~~70~~	~~BELL CRANK DOG~~	~~–~~	~~–~~	~~–~~	~~SST~~	~~ASTM-A276 TYPE 316, COND A~~	~~84-E~~	
69	BELL CRANK DOG	–	–	–	SST	ASTM-A276 TYPE 316 COND A	84-E	~~CF, ZINC PLATED NOTE 38 REF 2~~
~~68~~	~~LEVER DOG~~	~~–~~	~~–~~	~~–~~	~~SST~~	~~ASTM A276 TYPE 316, COND A~~	~~39-D~~	
~~67~~	~~LEVER DOG~~	~~–~~	~~–~~	~~–~~	~~SST~~	~~ASTM A276 TYPE 316, COND A~~	~~39-E~~	
~~66~~	~~LEVER DOG~~	~~–~~	~~–~~	~~–~~	~~SST~~	~~ASTM A276 TYPE 316, COND A~~	~~39-E~~	
65	LEVER DOG	–	–	–	SST	ASTM-A276 TYPE 316 COND A	40-D	~~CF, ZINC PLATED NOTE 38 REF 2~~
64	LEVER DOG	–	–	–	SST	ASTM-A276 TYPE 316 COND A	39-E	~~CF, ZINC PLATED NOTE 38 REF 2~~
63	LEVER DOG	–	–	–	SST	ASTM-A276 TYPE 316 COND A	39-E	~~CF, ZINC PLATED NOTE 38 REF 2~~
~~62~~	~~CONNECTING ROD TOP~~	~~–~~	~~–~~	~~–~~	~~SST~~	~~ASTM A276 TYPE 316, COND A~~	~~89-E~~	
61	CONNECTING ROD TOP	–	–	–	SST	ASTM-A276 TYPE 316, COND A	89-E	~~CF, ZINC PLATED NOTE 38 REF 2~~
60	CONNECTING ROD TOP	–	–	–	SST	ASTM-A276 TYPE 316, COND A	89-E	~~CF, ZINC PLATED NOTE 38 REF 2~~
59	CONNECTING ROD TOP	–	–	–	SST	ASTM-A276 TYPE 316, COND A	89-E	~~CF, ZINC PLATED NOTE 38 REF 2~~
58	CONNECTING ROD CORNER	–	–	–	SST	ASTM-A276 TYPE 316, COND A	92-E	~~CF, ZINC PLATED NOTE 38 REF 2~~
57	CONNECTING ROD CORNER	–	–	–	SST	ASTM-A276 TYPE 316 COND A	92-E	~~CF, ZINC PLATED NOTE 38 REF 2~~
~~56~~	~~CONNECTING ROD CORNER~~	~~–~~	~~–~~	~~–~~	~~SST~~	~~ASTM A276 TYPE 316, COND A~~	~~106-D~~	
55	CONNECTING ROD CORNER	–	–	–	SST	ASTM-A276 TYPE 316 COND A	107-D	~~CF, ZINC PLATED NOTE 38 REF 2~~
54	CONNECTING ROD CORNER	–	–	–	SST	ASTM-A276 TYPE 316 COND A	107-D	~~CF, ZINC PLATED NOTE 38 REF 2~~
53	CONNECTING ROD CORNER	–	–	–	SST	ASTM-A276 TYPE 316 COND A	107-D	~~CF, ZINC PLATED NOTE 38 REF 2~~
52	CONNECTING ROD CORNER	–	–	–	SST	ASTM-A276 TYPE 316 COND A	107-D	~~CF, ZINC PLATED NOTE 38 REF 2~~

PARTS LIST (A)

REVISIONS (CONTINUED FROM SHEET 1)

ZONE	REV	DESCRIPTION	DATE	APPROVED
12-A 16-A 39-D 40-E 85-E 89-E 97-E 107-E		ADDED ASSY S THRU NN. CHANGED MATL AND SPEC; FOR PC NOS 52 THRU 55, 57 THRU 61, 63 THRU 65, 69, 71 THRU 76 AND 79 THRU 80 TO SST; ASTM-A276 TYPE 316 COND A; AND NOTE 2 REF 1, WAS STL; ASTM A 108, GR 1018; AND CF, ZINC PLATED NOTE 38 REF 2. DELETED REMARKS FOR PC NOS 52 THRU 55, 57 THRU 80. DELETED PC NOS 56, 62, 66 THRU 68, 70 AND 77 THRU 78. ADDED PICKLE AND PASSIVATE IAW ASTM A380 TO REMARKS OF PC NO. 94.		
19-A 24-A 35-D 44-D 57-E 59-D 59-F 60-E 62-C 62-E 64-E		ADDED ASSY CC THRU JJ, LL, MM, OO THRU ZZ. DELETED PC NO. 103, 148, 151 AND 153. ADDED QTY OF 1 TO ASSY A THRU D AND G THRU P FOR PC NO. 104 DELETED SEAMLESS FROM REMARKS OF PC NOS 107 THRU 108 AND 131 THRU 133. DELETED QTY OF 1 FROM ASSY W AND X FOR PC NO. 150. CHANGED MATL AND SPEC FOR PC NO. 150 TO SST AND ASTM-A240 TYPE 316, COND A, WAS STL AND ASTM A 36.		
25-F		ADDED GENL NOTES 6 THRU 15.		
27-A 32-A 57-B 58-D 58-F 59-E 60-C 60-E 63-A 63-C 75-C 76-A 78-F 79-D 80-F	A	ADDED ASSY OO THRU ZZ. DELETED QTY OF ASSY U THRU X FOR PC NOS 155, 160 AND 161. CHANGED MATL AND SPEC FOR PC NO. 155 TO SST AND ASTM A240 TYPE 316, COND A, WAS STL AND ASTM A 36. DELETED PC NOS 156, 158, 159, 162, 182, 191 AND 193. ADDED QTY OF 1 TO ASSY MM FOR PC NOS 192 AND 194. ADDED PC NOS 196 THRU 204. ADDED QTY OF 2 TO ASSY JJ FOR PC NO. 183.		
33-B		DELETED WELD NOTE.		
36-B		MODIFIED FINISH.		
44-A		MODIFIED DIM. ADDED NOTE BREAK SHARP EDGES (TYP) TO SECTION 44-A.		
49-A		MODIFIED DIM. ADDED NOTE (TYP AT CORNERS).		
82-C		MODIFIED 5/8 DIA DRILL TO 5/16 DIA DRILL.		
83-A 84-A 86-A 87-A 93-A 95-A 98-A 100-A 101-A 103-A 106-A 108-A 109-A 111-A		DELETED CSK AND REF TO CSK.		
113-A 121-A 129-A 137-A		ADDED SHEETS 15-18.		
120-A		ADDED PC NO. 205.		
145-A 153-A 161-A		ADDED ASSEMBLY A-1 THRU N-2 TO NEW SHEETS 19-21.		
12-F		UPDATED SPEC FROM MIL-B-81934 TO SAE AS 81934		

DEPARTMENT OF THE NAVY
NAVAL SEA SYSTEMS COMMAND
WASHINGTON, D.C. 20362-5101

DRAWN	SIZE F	CAGE CODE 53711	ESWBS 803	DRAWING NO. 6397269	REV A
ISSUED	SCALE: NONE	MASS		SHEET 2	

DRAWING 803-6397269 SHEET 2 REV A

CONTINUED ON SHEET 4

PC NO.	NAME	REF NO.	PC NO.	ZONE DET ON	MATERIAL	IDENTIFYING NO. OR SPECIFICATION	ZONE	REMARKS
~~153~~	~~HINGE PAD~~				~~STL~~	~~ASTM-A36~~	~~59-D 64-E~~	
152	HINGE BLADE	–	–	–	SST	ASTM-A240 TYPE 316, COND A	59-C 62-C	
~~151~~	~~HINGE BLADE~~				~~STL~~	~~ASTM-A36~~	~~59-C 62-C~~	
150	HINGE BLADE	–	–	–	SST	ASTM-A240 TYPE 316, COND A	62-C 62-E	
149	HINGE BLADE	–	–	–	SST	ASTM-A240 TYPE 316, COND A	60-E 62-E	
~~148~~	~~HINGE BLADE~~				~~STL~~	~~ASTM-A36~~	~~60-E 62-E~~	
147	TOOTH LOCK WASHER	–	–	–	CRES	MS35333-74	67-C	1/4 NOMINAL
146	SCH CAP SCREW	–	–	–	CRES	MS16995-49	68-C	1/4-20UNC-3A, LG=5/8
145	TAPPED PLATE	–	–	–	SST	ASTM-A276 TYPE 316, COND A	68-D 69-C	
144	SPRING CLIP	–	–	–	PH BRZ	ASTM-B103 ALY C51000, TEMPER H08	67-C 70-A	
143	SPRING CLIP	–	–	–	PH BRZ	ASTM-B103 ALY C51000, TEMPER H08	67-C 70-A	
~~142~~	~~SPRING CLIP BRACKET, LH~~				~~SST~~	~~ASTM-A276 TYPE 316, COND A~~	~~68-A 68-D~~	
~~141~~	~~SPRING CLIP BRACKET, RH~~				~~SST~~	~~ASTM-A276 TYPE 316, COND A~~	~~68-A 68-D~~	
140	SPRING CLIP BRACKET, LH	–	–	–	SST	ASTM-A276 TYPE 316, COND A	68-A 68-D	
139	SPRING CLIP BRACKET, RH	–	–	–	SST	ASTM-A276 TYPE 316, COND A	68-A 68-D	
138	SPRING CLIP BRACKET, LH	–	–	–	SST	ASTM-A276 TYPE 316, COND A	68-A 68-D	
137	SPRING CLIP BRACKET, RH	–	–	–	SST	ASTM-A276 TYPE 316, COND A	68-A 68-D	
136	GUSSET	–	–	–	STL	ASTM-A36	41-A 42-D	
135	SCUFF PLATE	–	–	–	SST	ASTM-A276 TYPE 316, COND A	43-F 46-E	
134	FLANGED BEARING	–	–	–	316 SST	MIL-B-81934	44-E 46-C	SELF LUBRICATING NOTE 2
133	HANDLE SLEEVE	–	–	–	SST	ASTM-A312 GRADE TP316	47-A 47-E	1-1/4 SCHED 160 ~~SEAMLESS~~ PIPE
132	HANDLE SLEEVE	–	–	–	SST	ASTM-A312 GRADE TP316	46-E 47-A	1-1/4 SCHED 160 ~~SEAMLESS~~ PIPE
131	HANDLE SLEEVE	–	–	–	SST	ASTM-A312 GRADE TP316	44-E 47-A	1-1/4 SCHED 160 ~~SEAMLESS~~ PIPE
130	SCUFF LUG, LH	–	–	–	SST	ASTM-A276 TYPE 316, COND A	44-B 50-D	
129	SCUFF LUG, RH	–	–	–	SST	ASTM-A276 TYPE 316, COND A	43-B 50-D	
128	SCUFF LUG, LH	–	–	–	SST	ASTM-A276 TYPE 316, COND A	44-B 50-F	
127	SCUFF LUG, RH	–	–	–	SST	ASTM-A276 TYPE 316, COND A	44-B 50-F	
126	LINK PAD	–	–	–	SST	ASTM-A276 TYPE 316, COND A	42-C 51-A	
125	STOP PIN	–	–	–	SST	ASTM-A276 TYPE 316, COND A	42-C 52-A	
124	HANDLE SPINDLE	–	–	–	SST	ASTM-A276 TYPE 316, COND A	45-A 47-F	
123	HANDLE SPINDLE	–	–	–	SST	ASTM-A276 TYPE 316, COND A	45-A 46-F	
122	HANDLE SPINDLE	–	–	–	SST	ASTM-A276 TYPE 316, COND A	45-A 45-F	
121	OPERATING HANDLE (OUTSIDE) LH	–	–	–	SST	ASTM-A473, TYPE 316	47-F 48-F	
120	OPERATING HANDLE (OUTSIDE) RH	–	–	–	SST	ASTM-A473, TYPE 316	47-F 48-F	
119	OPERATING HANDLE (OUTSIDE) LH	–	–	–	SST	ASTM-A473, TYPE 316	45-F 54-C	
118	OPERATING HANDLE (OUTSIDE) RH	–	–	–	SST	ASTM-A473, TYPE 316	45-F 54-C	
117	OPERATING HANDLE (OUTSIDE) LH	–	–	–	SST	ASTM-A473, TYPE 316	45-F 54-D	
116	OPERATING HANDLE (OUTSIDE) RH	–	–	–	SST	ASTM-A473, TYPE 316	45-F 54-D	
115	OPERATING HANDLE (INSIDE)	–	–	–	SST	ASTM-A473, TYPE 316	47-E 51-B	
114	OPERATING HANDLE (INSIDE)	–	–	–	SST	ASTM-A473, TYPE 316	48-E 51-D	
113	OPERATING HANDLE (INSIDE)	–	–	–	SST	ASTM-A473, TYPE 316	45-D 47-E	
112	DOG WEDGE, LH	–	–	–	AL BRZ	ASTM-B148 ALY C95200 OR C95300	33-E 37-D	NOTE 27, REF 2
111	DOG WEDGE, RH	–	–	–	AL BRZ	ASTM-B148 ALY C95200 OR C95300	33-E 37-D	NOTE 27, REF 2
110	FRAME STIFFENER	–	–	–	SST	ASTM-A240 TYPE 316, COND A	34-A 35-E	
109	FRAME STIFFENER	–	–	–	STL	ASTM-A36	34-A 35-E	
108	DOG SLEEVE	–	–	–	SST	ASTM-A312 GRADE TP316	35-C 39-A	1-1/4 SCHED 160 ~~SEAMLESS~~ PIPE
107	DOG SLEEVE	–	–	–	SST	ASTM-A312 GRADE TP316	35-C 39-A	1-1/4 SCHED 160 ~~SEAMLESS~~ PIPE
106	SPRING	–	–	–	SST	ASTM-A313 TYPE 302, CLASS 1	34-C 38-E	
105	WASHER	–	–	–	SST	ASTM-A276 TYPE 316, COND A	35-B 44-F	
104	LOCKNUT, HEX, HEAVY THIN, NYLON INSERT	–	–	–	SST	COML	34-D 44-D	7/8-9UNC-3B, GREER PT NO. NTU-1409 OR EQ
~~103~~	~~HEX NUT SELF LOCKING FULLY METALLIC~~				~~STL ZINC PLD~~	~~COML~~	~~35-D 45-D~~	~~7/8-9UNC-2B NOTE 25 REF 2~~

PARTS LIST (A)

ASSEMBLY LETTER / QUANTITY PER ASSEMBLY

ASSEMBLY LETTER	QUANTITY PER ASSEMBLY
TT	
SS	
RR	
QQ	
PP	
OO	
NN	
MM	
LL	
KK	
JJ	
II	
HH	
GG	
FF	
EE	
DD	
CC	
BB	
AA	
Z	
Y	
X	
W	
V	
U	
T	
S	
R	
Q	
P	
O	
N	
M	
L	
K	
J	
I	
H	
G	
F	
E	
D	
C	
B	
A	

PC NO.	ASSEMBLY LETTER / QUANTITY PER ASSEMBLY
~~153~~	2 2 2 2
152	1 1 1 1
~~151~~	1 1 1 1
150	1 1 1 1
149	1 1 1 1
~~148~~	1 1 1 1
147	2 2 2 2 2 2 2 2 2 2 2 2
146	2 2 2 2 2 2 2 2 2 2 2 2
145	1 1 1 1 1 1 1 1 1 1 1 1 1
144	1 1 1 1 1 1 1 1 1 1 1 1 1
143	1 1 1 1 1 1 1 1 1 1 1 1 1
~~142~~	1
~~141~~	1
140	1 1 1
139	1 1 1
138	1 1 1
137	1 1 1
136	2 2 2 2 2 2
135	1 1 1 1 1 1 1 1 1 1 1 1 1
134	2 2 2 2 2 2 2 2 2 2 2 2 2
133	1 1 1
132	1 1 1 1
131	1 1 1 1 1
130	1 1 1 1
129	1 1 1 1
128	1 1 1 1
127	1 1 1 1
126	1 1 1 1 1 1 1 1 1 1 1 1 1
125	1 1 1 1 1 1 1 1 1 1 1 1 1
124	1 1 1 1
123	1 1 1 1 1 1
122	1 1 1 1 1 1 1 1 1
121	1 1 1 1
120	1 1 1 1
119	1 1
118	1 1
117	1 1 1
116	1 1 1
115	1 1 1 1
114	1 1 1 1
113	1 1 1 1 1 1 1 1 1 1 1
112	1 1 1 1
111	1 1 1 1
110	2 2 2 2
109	2 2 2 2
108	1 1 1 1
107	1 1 1 1
106	1 1 1 1 1 1
105	2 2 2 2 2 2 2 2 2 2 2 2 1 1 1 1 1 1
104	1 1 1 1 1 1 1 1 1 1 1 1 1 1 1 1 1 1
~~103~~	~~1 1 1 1 1 1 1 1 1 1 1 1 1 1 1 1 1 1~~

DEPARTMENT OF THE NAVY NAVAL SEA SYSTEMS COMMAND WASHINGTON, D.C. 20362-5101	
DRAWN	
ISSUED	
SIZE F	CAGE CODE 53711
ESWBS 803	DRAWING NO. 6397269
REV A	
SCALE: NONE	MASS
SHEET 3	

DRAWING 803-6397269 SHEET 3 REV A

CONTINUED ON SHEET 15

TT	SS	RR	QQ	PP	OO	NN	MM	LL	KK	JJ	II	HH	GG	FF	EE	DD	CC	BB	AA	Z	Y	X	W	V	U	T	S	PC NO.	NAME	REFNO.	PC NO.	ZONE (DET ON)	MATERIAL	IDENTIFYING NO. OR SPECIFICATION	ZONE	REMARKS
4	4	4	4	4	4																							205	FLAT WASHER	–	–	–	CRES 316	FF-W-92	130-A 139-A	7/16 NOM SEE NOTE 9
6	6	6	6	6	6																							204	THRUST WASHER	–	–	–	VARIOUS	COML	131-A 139-A	SEE NOTE 14
4	4	4	4	4	4																							203	BUSHING, YOKE	–	–	–	VARIOUS	COML	135-A	SEE NOTE 13 & 14
2	2	2	2	2	2																							202	BUSHING, HINGE PAD	–	–	–	VARIOUS	COML	131-A 139-A	SEE NOTE 10 & 14
1	1	1	1	1	1																							201	COTTER PIN, EXTENDED PRONG	–	–	–	BRASS	COML	131-A 139-A	1/8 DIA X 1 LG SEE NOTE 9
1	1	1	1	1	1																							200	COTTER PIN, EXTENDED PRONG	–	–	–	CRES	MS24665-444	131-A 139-A	5/32 DIA X 2 LG
1	1	1	1	1	1																							199	YOKE PIN	–	–	–	CRES	ASTM-A276 TYPE 316, COND A	137-E	
1	1	1	1	1	1																							198	HINGE PIN	–	–	–	CRES	ASTM-A276 TYPE 316, COND A	139-E	SEE NOTE 9 & 10
		1	1																									197	HINGE YOKE, HIGH	–	–	–	CRES	SEE NOTE 6 AND 7	139-A	SEE NOTE 8A, 8B & 13
1	1			1	1																							196	HINGE YOKE, LOW	–	–	–	CRES	SEE NOTE 6	142-A	SEE NOTE 8A & 13
						1	1																					195	RDH MACH SCREW	–	–	–	BRASS	FF-S-92 TYPE I, STYLE 1S	80-F	1/4-20UNC-2A LG=1
						1	1																					194	CAP	–	–	–	SST	ASTM-A276 TYPE 316, COND A	78-D 79-E	
							1																					~~193~~	~~CAP~~	~~–~~	~~–~~	~~–~~	~~STL~~	~~ASTM A36~~	~~79-D~~ ~~80-E~~	
						1	1																					192	ARM	–	–	–	SST	ASTM-A312 GR TP316, WELDED	78-F	
							1																					~~191~~	~~ARM~~	~~–~~	~~–~~	~~–~~	~~CALV STL~~	~~ASTM A53~~	~~78-F~~	
						1	1																					190	BUMPER	–	–	–	RUBBER	ASTM-D2000 TYPE BC, 75 DUROMETER	80-D 80-F	
								3																				189	HOOK STAPLE	–	–	–	SST	ASTM-A276 TYPE 316, COND A	78-D 80-E	
								1																				188	HOOK	–	–	–	SST	ASTM-A276 TYPE 316, COND A	78-B 80-E	
									6	6																		187	HEX NUT	–	–	–	CRES	MS51971-3	75-C 75-E	3/8-16UNC-2B
									6	6																		186	STUD	–	–	–	SST	ASTM-A276 TYPE 316, COND A	73-A 75-C	
									2	2																		185	GASKET	–	–	–	RUBBER	MIL-R-900	75-C 76-D	
									1	1																		184	LENS	–	–	–	CLEAR GLASS	MIL-G-2697, TYPE A	74-C 75-A	HEAT TREATED
									2	2																		183	FRAME	–	–	–	SST	ASTM-A240 TYPE 316, COND A	75-C 76-A	
										~~2~~																	~~182~~	~~FRAME~~	~~–~~	~~–~~	~~–~~	~~STL~~	~~ASTM A569~~	~~75-C~~ ~~76-A~~	~~HR, CQ~~
											1																	181	PADLOCK EYE	–	–	–	SST	ASTM-A276 TYPE 316, COND A	65-E 67-B	
												1																180	PADLOCK EYE	–	–	–	SST	ASTM-A276 TYPE 316, COND A	65-E 67-B	
														1														179	PADLOCK EYE	–	–	–	SST	ASTM-A276 TYPE 316, COND A	65-E 66-C	
													1															178	PADLOCK EYE	–	–	–	SST	ASTM-A276 TYPE 316, COND A	65-E 66-C	
																1												177	PADLOCK EYE	–	–	–	SST	ASTM-A276 TYPE 316, COND A	65-E 66-B	
															1													176	PADLOCK EYE	–	–	–	SST	ASTM-A276 TYPE 316, COND A	65-E 66-B	
													1	1														175	PADLOCK EYE	–	–	–	SST	ASTM-A276 TYPE 316, COND A	65-E 67-A	
											1	1			1	1												174	PADLOCK EYE	–	–	–	SST	ASTM-A276 TYPE 316, COND A	65-E 66-A	
																	1											173	HASP EYE	–	–	–	SST	ASTM-A276 TYPE 316, COND A	71-F 72-D	
																	1											172	PADLOCK EYE	–	–	–	SST	ASTM-A276 TYPE 316, COND A	70-C 71-F	
																	1											171	PADLOCK HASP	–	–	–	SST	ASTM-A276 TYPE 316, COND A	70-D 70-F	
																		1	1	1	1	1	1	1	1	1		170	WASHER	–	–	–	NAVAL BRASS	ASTM-B21 ALY C46400, TEMPER H02	57-D 59-E	1-1/2 OD X 21/32 ID X 1/8 THK
																		3	3	3	3	3	3	3	3	3		169	WASHER	–	–	–	LEADED BRASS	ASTM-B21 ALY C48500, TEMPER H02	57-D 59-E	1-3/8 OD X 21/32 ID X 1/16 THK
																		1	1	1	1	1	1	1	1	1		168	COTTER PIN	–	–	–	CRES	MS24665-444	59-E 59-F	5/32 DIA X 2 LG
																		1	1	1	1	1	1	1	1	1		167	YOKE PIN	–	–	–	NAVAL BRASS	ASTM-B21 ALY C48200, TEMPER H02	57-E 59-E	
																		1	1	1	1	1	1	1	1	1		166	COTTER PIN	–	–	–	CRES	MS24665-302	58-E 59-E	3/32 DIA X 1 LG
																		1	1	1	1	1	1	1	1	1		165	HEX NUT	–	–	–	BRASS	MS51969-5	58-E 59-E	1/2-13UNC-2B
																		1	1	1	1	1	1	1	1	1		164	HINGE PIN	–	–	–	NAVAL BRASS	ASTM-B21 ALY C48200, TEMPER H02	59-F 60-A	
																		1	1	1	1							163	HINGE YOKE	–	–	–	SST	ASTM-A240 TYPE 316, COND A	59-E 60-B	
																					~~1~~	~~1~~	~~1~~	~~1~~	~~1~~	~~1~~	~~162~~	~~HINGE YOKE~~	~~–~~	~~–~~	~~–~~	~~STL~~	~~ASTM A36~~	~~59-E~~ ~~60-B~~	
		1	1															1	1				~~1~~	~~1~~				161	GUSSET	–	–	–	SST	ASTM-A240 TYPE 316, COND A	57-B 63-A	
1	1			1	1															1	1	~~1~~	~~1~~					160	GUSSET	–	–	–	SST	ASTM-A240 TYPE 316, COND A	59-D 63-A	
																							~~1~~	~~1~~				~~159~~	~~GUSSET~~	~~–~~	~~–~~	~~–~~	~~STL~~	~~ASTM A36~~	~~57-B~~ ~~63-A~~	
																					~~1~~	~~1~~			~~1~~	~~1~~		~~158~~	~~GUSSET~~	~~–~~	~~–~~	~~–~~	~~STL~~	~~ASTM A36~~	~~59-D~~ ~~63-A~~	
		2	2															2	2									157	HINGE PAD	–	–	–	SST	ASTM-A240 TYPE 316, COND A	57-B 63-C	
																							~~2~~	~~2~~				~~156~~	~~HINGE PAD~~	~~–~~	~~–~~	~~–~~	~~STL~~	~~ASTM A36~~	~~57-B~~ ~~64-C~~	
2	2																				~~2~~	~~2~~						155	HINGE PAD	–	–	–	SST	ASTM-A240 TYPE 316, COND A	61-B 64-E	
				2	2															2	2							154	HINGE PAD	–	–	–	SST	ASTM-A240 TYPE 316, COND A	59-D 63-E	

ASSEMBLY LETTER
QUANTITY PER ASSEMBLY

PARTS LIST

GENERAL NOTES: (CONTINUED FROM SHEET 1)

6. HINGE YOKE, PC 196, WILL BE MANUFACTURED AS AN INVESTMENT CASTING, SEE DETAIL 142-A. INVESTMENT CASTING SHALL BE IN ACCORDANCE WITH ASTM-A957 AND MATERIAL SHALL BE IN ACCORDANCE WITH ASTM-A743 GRADE CF-3M.
7. HINGE YOKE, PC 197, CUT FROM INVESTMENT CAST PC 196.
8. MARKINGS:
   A. FOR INVESTMENT CASTINGS: HINGE YOKE, PCS 196 & 197, SHALL BE MARKED IN ACCORDANCE WITH ASTM-A743 REQUIREMENTS. DATE OF CASTING SHALL ALSO BE INCLUDED. SEE DETAIL 139-A & 142-A FOR LOCATION OF MARKINGS.
   B. HIGH HINGE YOKE, PC 197, SHALL BE PERMANENTLY MARKED "HIGH HINGE ONLY". LETTERING SHALL BE 1/8 INCH MINIMUM. SEE DETAIL 139-A FOR LOCATION OF MARKING.
9. HINGE PIN, PC 198, IS TO BE DRILLED WITH TWO HOLES TO PROVIDE ALTERNATE COTTER PIN POSITIONS. THE FIRST HOLE FROM THE TOP IS THE PREFERRED POSITION. THIS POSITION WILL ALLOW ONE FLAT WASHER, PC 205, TO BE INSERTED BETWEEN THE COTTER PIN, PC 201, AND THE BOTTOM OF THE HINGE PAD. THE SECOND HOLE IS PROVIDED WHEN THE COTTER PIN CANNOT BE INSERTED INTO THE FIRST HOLE. WHEN THE SECOND HOLE IS USED, A SUFFICIENT QUANTITY OF FLAT WASHERS SHALL BE INSERTED TO PREVENT THE HINGE PIN FROM VERTICAL MOVEMENT.
10. HINGE PAD BUSHINGS, PC 202, ARE TO BE BONDED TO THE HINGE PADS WITH ADHESIVE, 3M SCOTCH WELD DP8005 OR EQUAL. HINGE PIN, PC 198, IS TO BE INSERTED THROUGH THE HINGE PAD BUSHING WHILE THE ADHESIVE SETS TO ENSURE GOOD ALIGNMENT.
11. HINGE YOKES, PCS 196 & 197, ARE TO BE ASSEMBLED WITH YOKE BUSHINGS, PC 203, BY THE BUSHING MANUFACTURER. THE YOKE BUSHINGS ARE TO BE A PRESS FIT AND INSTALLED WITH ADHESIVE, 3M SCOTCH WELD DP8005 OR EQUAL. BUSHINGS ARE TO BE PRESSED INTO THE YOKE SO THE EDGE OF THE BUSHING IS FLUSH WITH THE OUTSIDE OF THE YOKE.
12. TABLE 1 LISTS FOUR MANUFACTURERS, EACH OF WHICH CAN PRODUCE THE HINGE PAD BUSHINGS, PC 202, YOKE BUSHINGS, PC 203, AND THRUST WASHERS, PC 204, REQUIRED. PCS 202-204 ARE TO BE PROCURED BY THE SAME MFR FOR EACH ASSEMBLY.
13. HINGE ASSEMBLY USE:
    ASSY S: FOR EXISTING RH DOORS WITH LOW HINGES.
    ASSY T: FOR EXISTING LH DOORS WITH LOW HINGES.
    ASSY U: FOR EXISTING RH DOORS WITH HIGH HINGES.
    ASSY V: FOR EXISTING LH DOORS WITH HIGH HINGES.
    ASSY W: FOR EXISTING RH DOORS WITH LOW MOD HINGES.
    ASSY X: FOR EXISTING LH DOORS WITH LOW MOD HINGES.
    ASSY OO: FOR NEW CONSTRUCTION RH DOORS WITH LOW HINGES.
    ASSY PP: FOR NEW CONSTRUCTION LH DOORS WITH LOW HINGES.
    ASSY QQ: FOR NEW CONSTRUCTION RH DOORS WITH HIGH HINGES.
    ASSY RR: FOR NEW CONSTRUCTION LH DOORS WITH HIGH HINGES.
    ASSY SS: FOR NEW CONSTRUCTION RH DOORS WITH LOW MOD HINGES.
    ASSY TT: FOR NEW CONSTRUCTION LH DOORS WITH LOW MOD HINGES.

DRAWING 803-6397269 SHEET 4 REV A

DEPARTMENT OF THE NAVY NAVAL SEA SYSTEMS COMMAND WASHINGTON, D.C. 20362-5101	SIZE	CAGE CODE	ESMBS	DRAWING NO.	REV
DRAWN	F	53711	803	6397269	A
ISSUED	SCALE: NONE	MASS		SHEET 4	

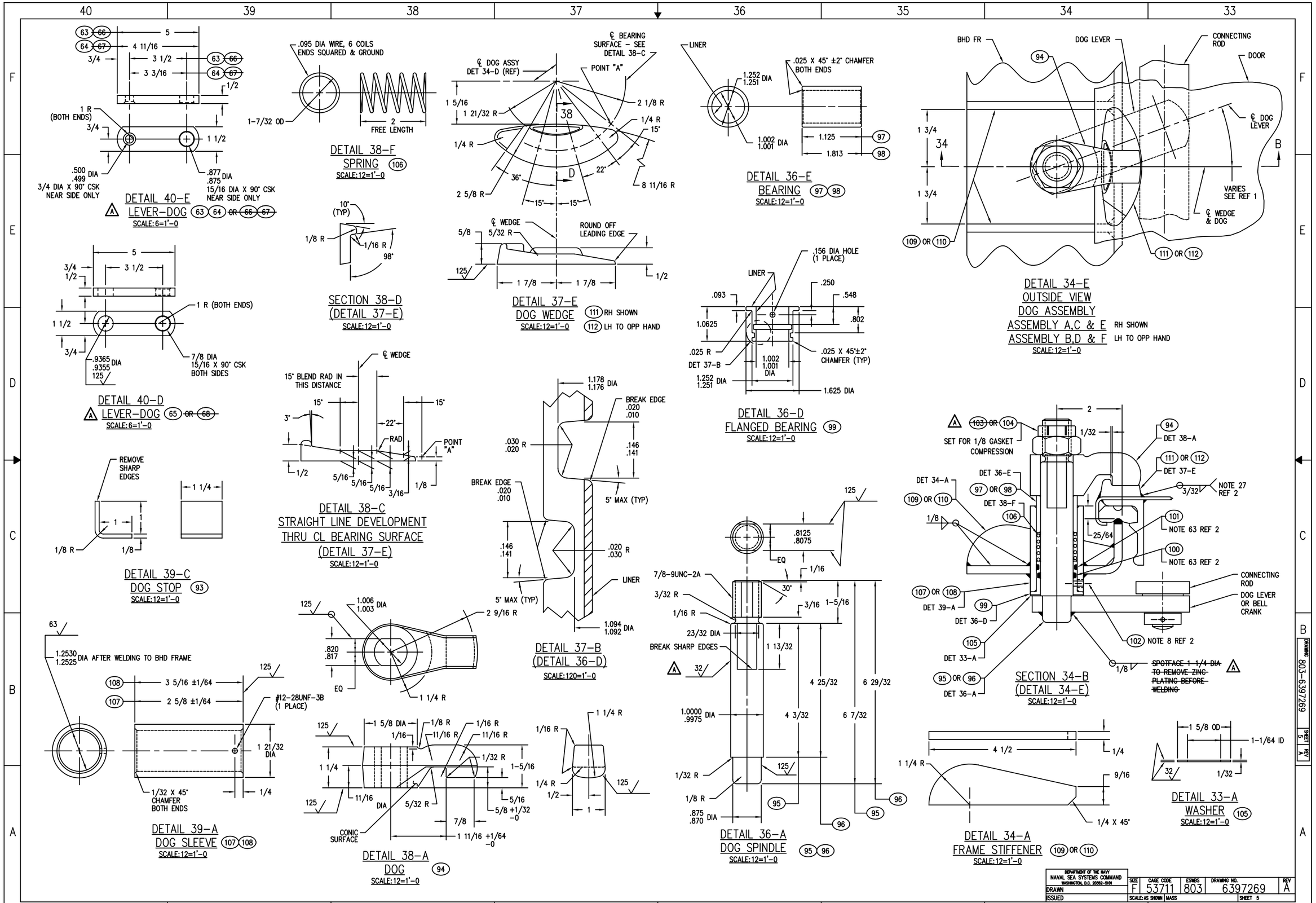
DETAIL 40-E
LEVER-DOG (63) (64) OR (66) (67)
SCALE:6=1'-0
DETAIL 40-D
LEVER-DOG (65) OR (68)
SCALE:6=1'-0
DETAIL 39-C
DOG STOP (93)
SCALE:12=1'-0
DETAIL 39-A
DOG SLEEVE (107) (108)
SCALE:12=1'-0
DETAIL 38-F
SPRING (106)
SCALE:12=1'-0
SECTION 38-D
(DETAIL 37-E)
SCALE:12=1'-0
DETAIL 38-C
STRAIGHT LINE DEVELOPMENT
THRU CL BEARING SURFACE
(DETAIL 37-E)
SCALE:12=1'-0
DETAIL 38-A
DOG (94)
SCALE:12=1'-0
DETAIL 37-E
DOG WEDGE
SCALE:12=1'-0
(111) RH SHOWN
(112) LH TO OPP HAND
DETAIL 37-B
(DETAIL 36-D)
SCALE:120=1'-0
DETAIL 36-E
BEARING (97) (98)
SCALE:12=1'-0
DETAIL 36-D
FLANGED BEARING (99)
SCALE:12=1'-0
DETAIL 36-A
DOG SPINDLE (95) (96)
SCALE:12=1'-0
DETAIL 34-E
OUTSIDE VIEW
DOG ASSEMBLY
ASSEMBLY A,C & E RH SHOWN
ASSEMBLY B,D & F LH TO OPP HAND
SCALE:12=1'-0
SECTION 34-B
(DETAIL 34-E)
SCALE:12=1'-0
DETAIL 34-A
FRAME STIFFENER (109) OR (110)
SCALE:12=1'-0
DETAIL 33-A
WASHER (105)
SCALE:12=1'-0
DEPARTMENT OF THE NAVY
NAVAL SEA SYSTEMS COMMAND
WASHINGTON, D.C. 20362-5101
DRAWN
ISSUED
SIZE F
CAGE CODE 53711
ESWBS 803
DRAWING NO. 6397269
REV A
SCALE: AS SHOWN
MASS
SHEET 5

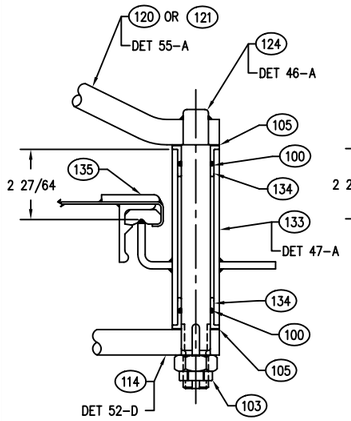

SECTION 48-E
ASSEMBLY M & N
FOR INFO NOT SHOWN SEE SECTION 45-D
(DETAIL 43-A)
SCALE:6=1'-0

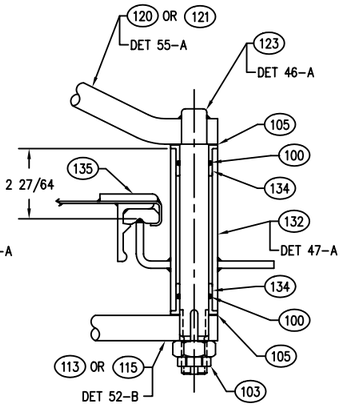

SECTION 46-E
ASSEMBLY K, L, O & P
FOR INFO NOT SHOWN SEE SECTION 45-D
(DETAIL 43-A)
SCALE:6=1'-0

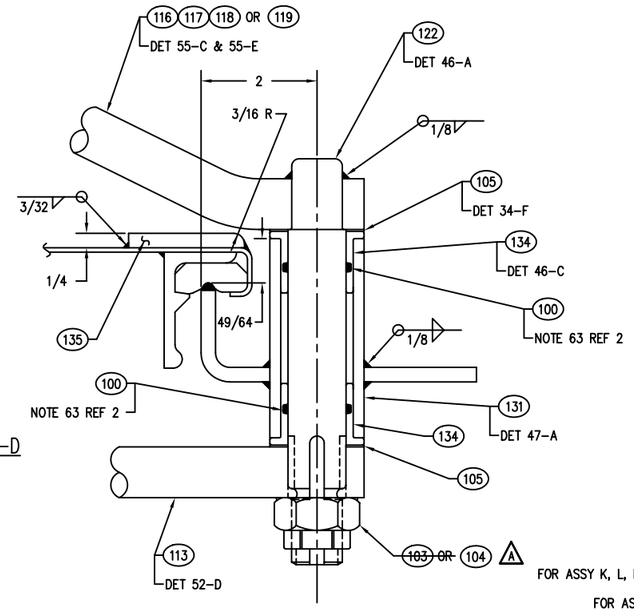

SECTION 45-D
ASSEMBLY G, H, I, & J
(DETAIL 43-A)
SCALE:12=1'-0

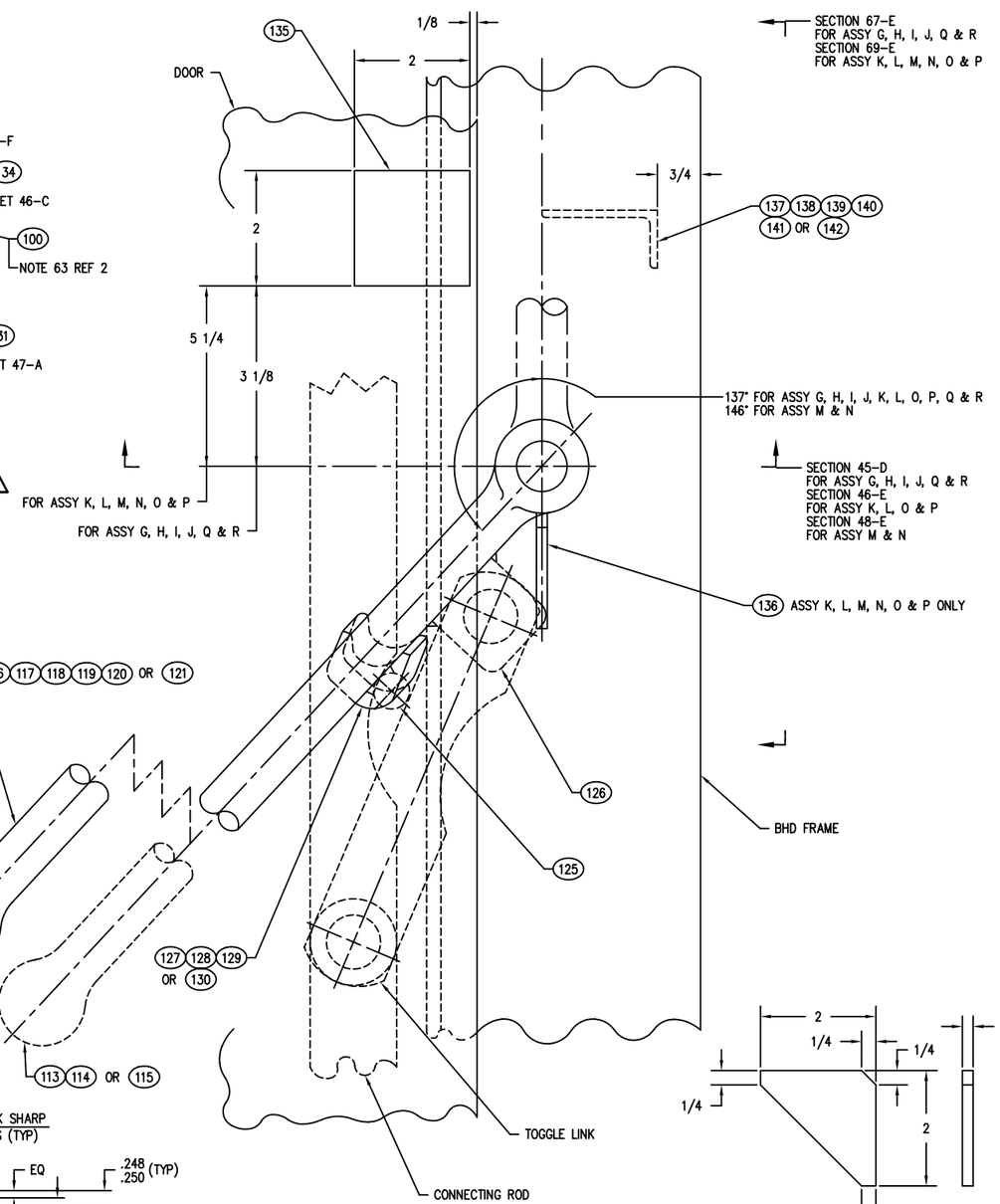

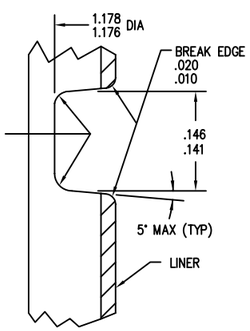

DETAIL 48-C
(DETAIL 46-C)
SCALE:120=1'-0

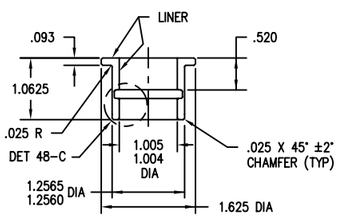

DETAIL 46-C
FLANGED BEARING 134
SCALE:12=1'-0

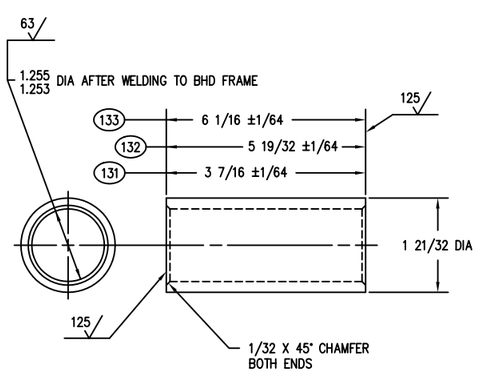

DETAIL 47-A
HANDLE SLEEVE 131 132 133
SCALE:12=1'-0

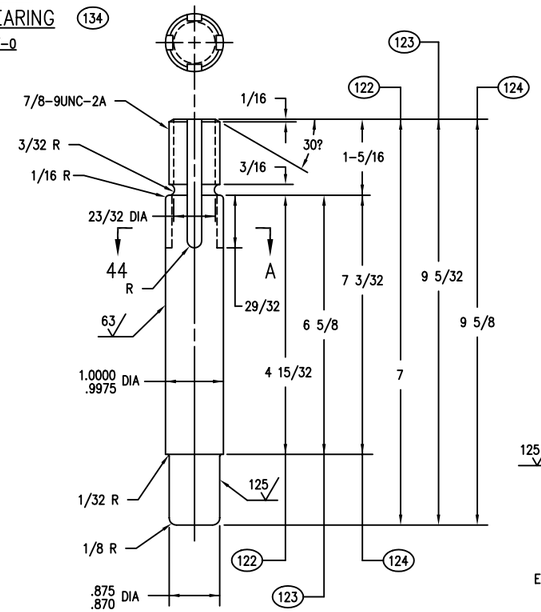

DETAIL 46-A
HANDLE SPINDLE 122 123 124
SCALE:12=1'-0

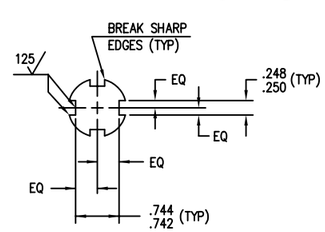

SECTION 44-A A
(DETAIL 46-A)
SCALE:12=1'-0

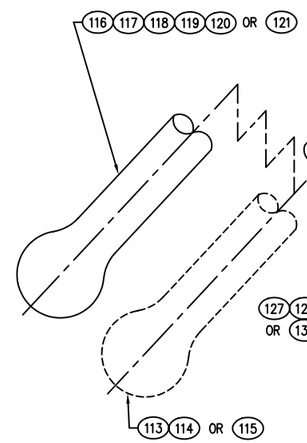

DETAIL 43-A
OUTSIDE VIEW
OPERATING HANDLE ASSEMBLY
ASSEMBLY H, J, L, N, & P LH SHOWN
ASSEMBLY G, I, K, M, & O RH TO OPP HAND
SCALE:12=1'-0

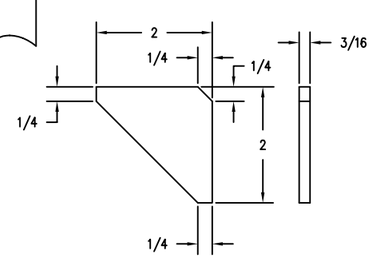

DETAIL 41-A
GUSSET 136
SCALE:12=1'-0

DEPARTMENT OF THE NAVY NAVAL SEA SYSTEMS COMMAND WASHINGTON, D.C. 20362-5101	SIZE	CAGE CODE	ESWBS	DRAWING NO.	REV
DRAWN	F	53711	803	6397269	A
ISSUED	SCALE: AS SHOWN	MASS		SHEET 6	

DRAWING 803-6397269 SHEET 6 REV A

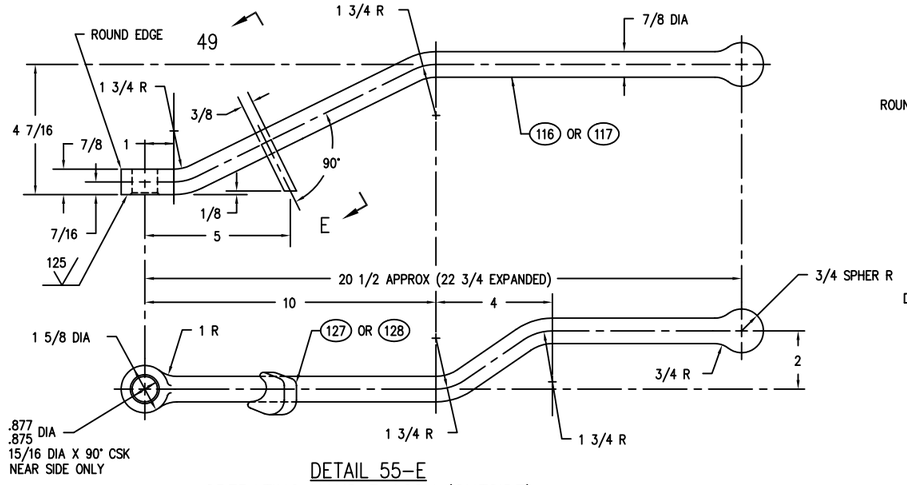

DETAIL 55-E
OPERATING HANDLE ASSY (OUTSIDE)
SCALE: 6=1'-0

117 128 LH SHOWN
116 127 RH TO OPP HAND

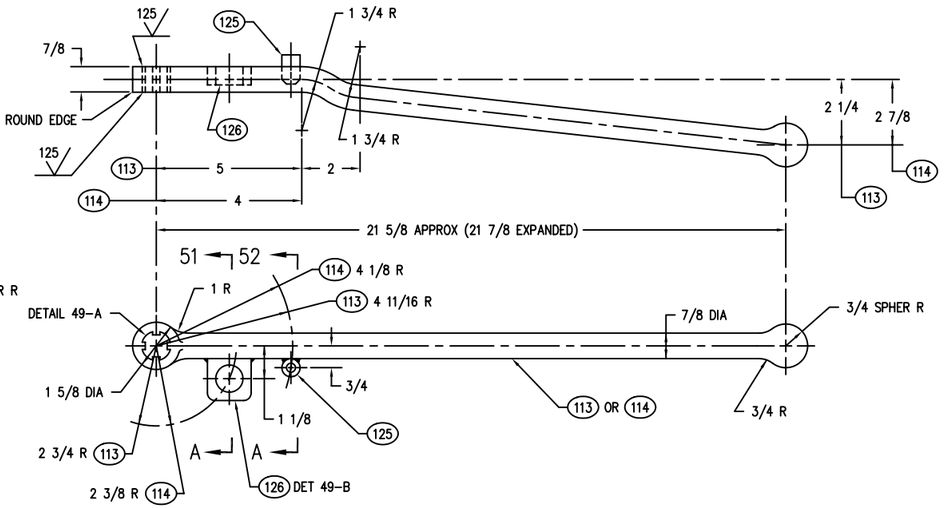

DETAIL 52-D
OPERATING HANDLE ASSY (INSIDE) 113 125 126 LH SHOWN RH TO OPP HAND
OPERATING HANDLE ASSY (INSIDE) 114 125 126 LH SHOWN RH TO OPP HAND
SCALE: 6=1'-0

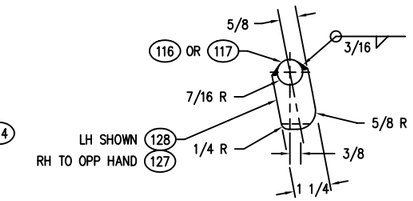

SECTION 49-E
(DETAIL 55-C & 55-E)
SCALE: 6=1'-0

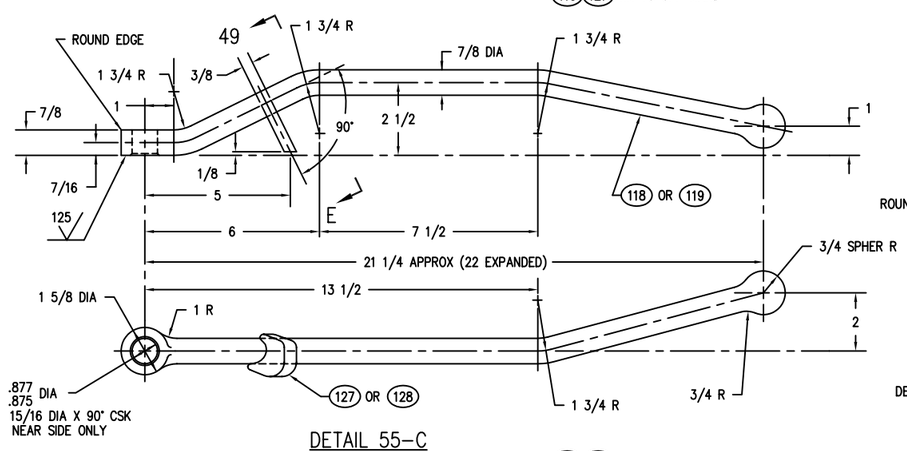

DETAIL 55-C
OPERATING HANDLE ASSY (OUTSIDE)
SCALE: 6=1'-0

119 128 LH SHOWN
118 127 RH TO OPP HAND

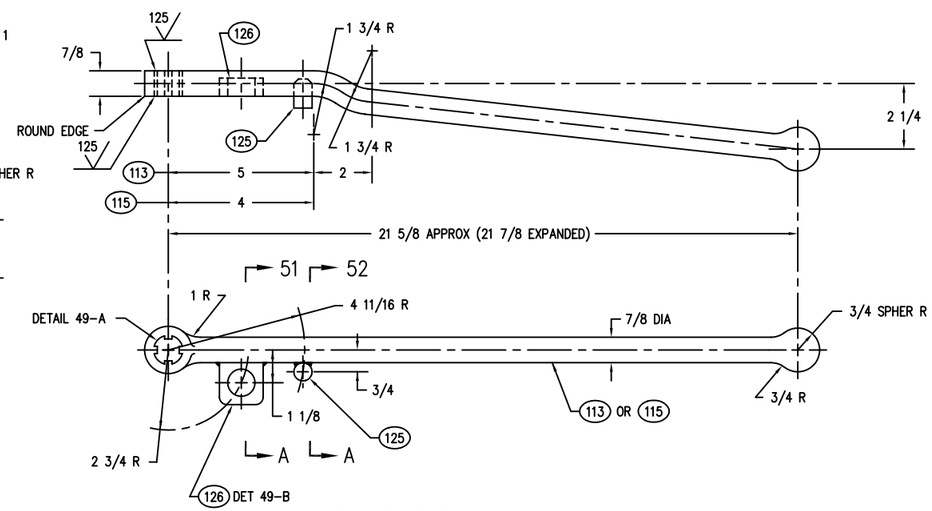

DETAIL 52-B
OPERATING HANDLE ASSY (INSIDE) 113 125 126 LH SHOWN RH TO OPP HAND
OPERATING HANDLE ASSY (INSIDE) 115 125 126 LH SHOWN RH TO OPP HAND
SCALE: 6=1'-0

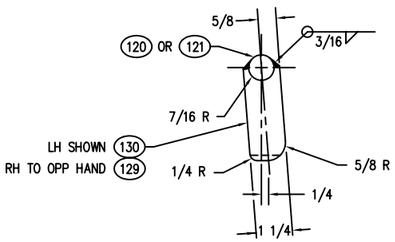

SECTION 49-D
(DETAIL 55-A)
SCALE: 6=1'-0

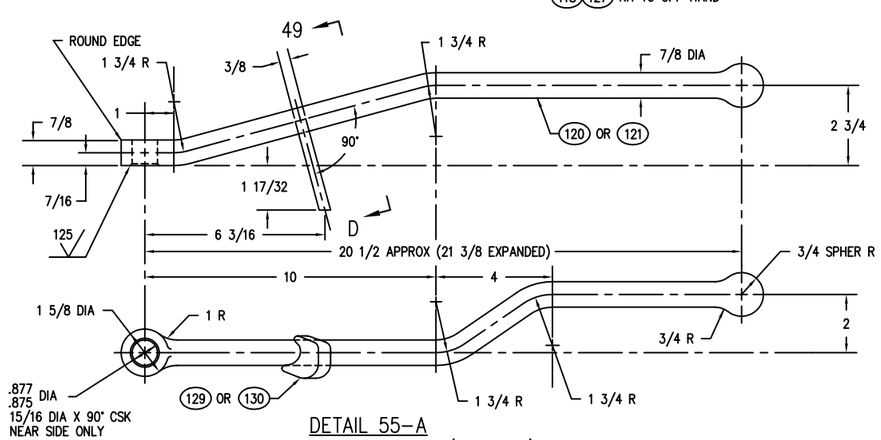

DETAIL 55-A
OPERATING HANDLE ASSY (OUTSIDE)
SCALE: 6=1'-0

121 130 LH SHOWN
120 129 RH TO OPP HAND

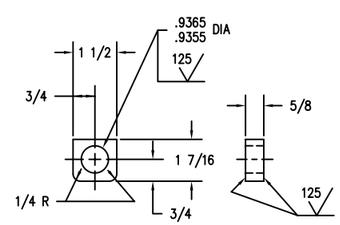

DETAIL 49-B
LINK PAD 126
SCALE: 6=1'-0

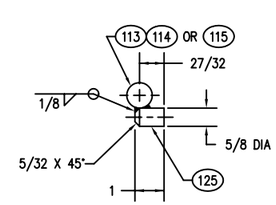

SECTION 52-A
(DETAIL 52-B & 52-D)
SCALE: 6=1'-0

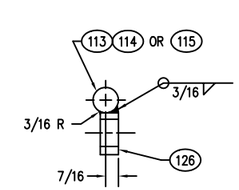

SECTION 51-A
(DETAIL 52-B & 52-D)
SCALE: 6=1'-0

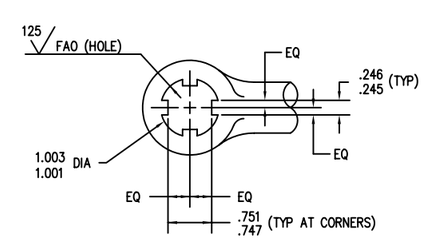

DETAIL 49-A
(DETAIL 52-B & 52-D)
SCALE: 12=1'-0

DEPARTMENT OF THE NAVY NAVAL SEA SYSTEMS COMMAND WASHINGTON, D.C. 20362-5101	SIZE	CAGE CODE	ESWBS	DRAWING NO.	REV
DRAWN	F	53711	803	6397269	A
ISSUED	SCALE: AS SHOWN	MASS		SHEET 7	

DRAWING 803-6397269 SHEET 7 REV A

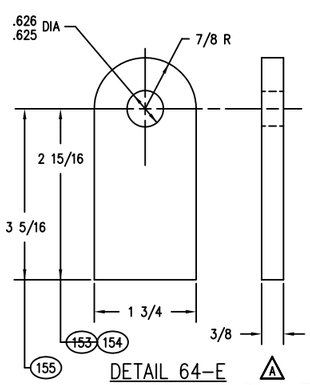

DETAIL 64-E
HINGE PAD (153) OR (154) (155)
SCALE:12=1'-0

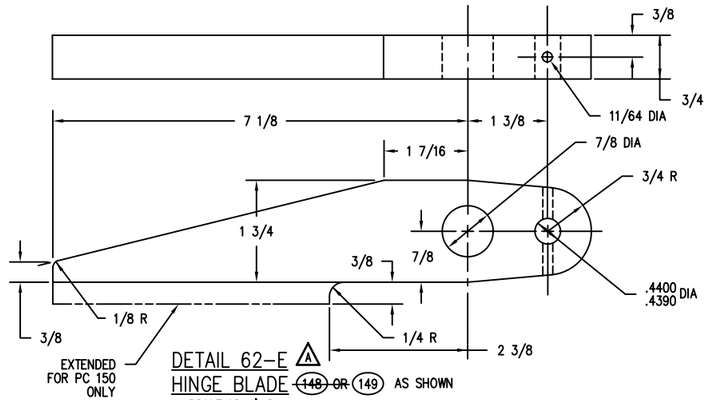

DETAIL 62-E
HINGE BLADE (148) OR (149) AS SHOWN
(150) AS NOTED
SCALE:12=1'-0

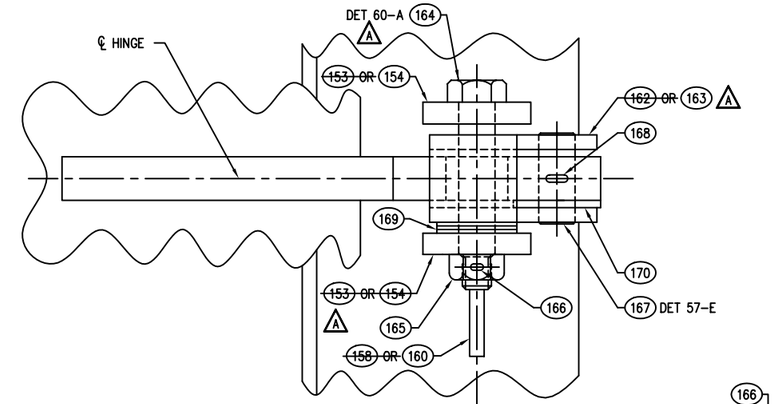

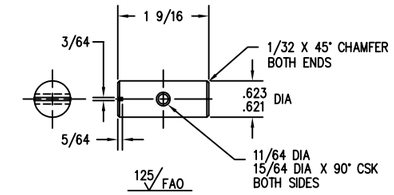

DETAIL 57-E
YOKE PIN (167)
SCALE:12=1'-0

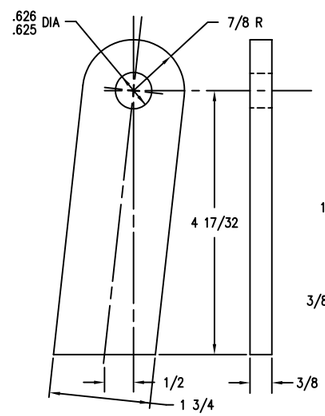

DETAIL 64-C
HINGE PAD (156) OR (157)
SCALE:12=1'-0

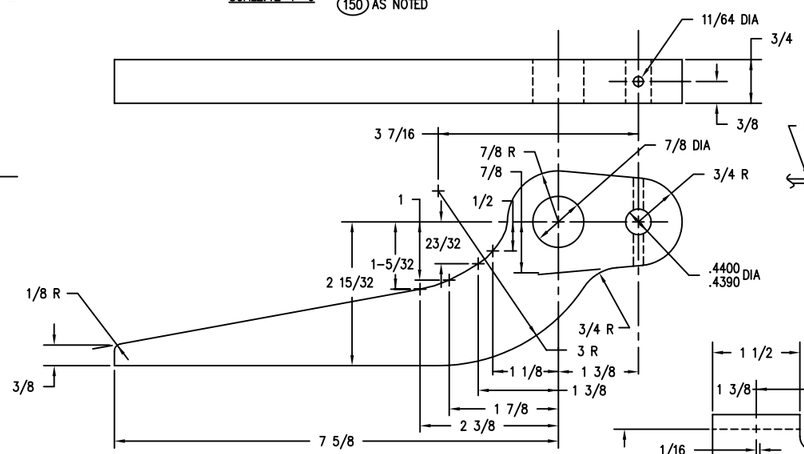

DETAIL 62-C
HINGE BLADE (151) OR (152)
SCALE:12=1'-0

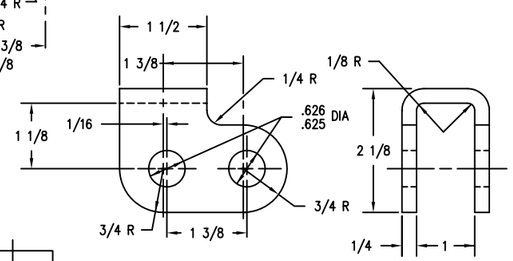

DETAIL 60-C
HINGE YOKE (162) OR (163)
SCALE:12=1'-0

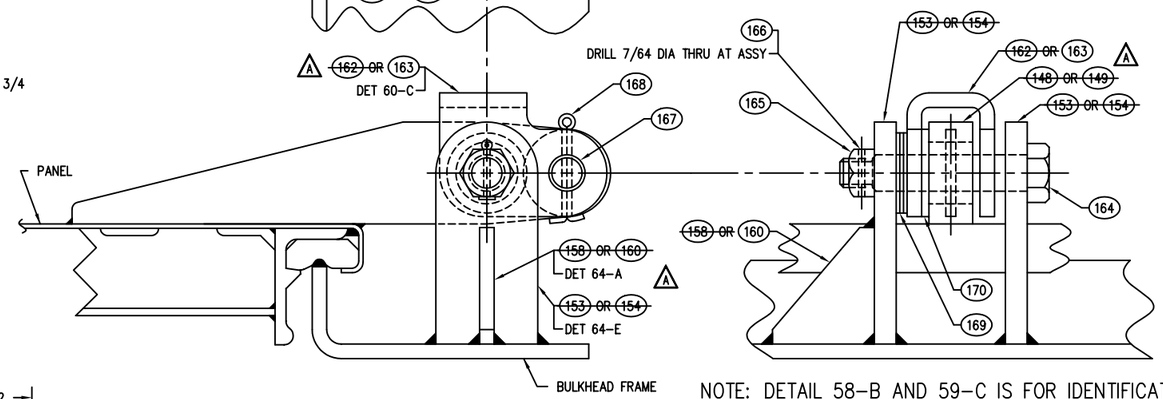

NOTE: DETAIL 58-B AND 59-C IS FOR IDENTIFICATION OF MAINTENANCE REPLACEMENT PARTS ONLY.

DETAIL 59-C
HINGE ASSEMBLY
ASSEMBLY S & Y RH SHOWN
ASSEMBLY T & Z LH TO OPP HAND
LOW TYPE
SCALE:12=1'-0

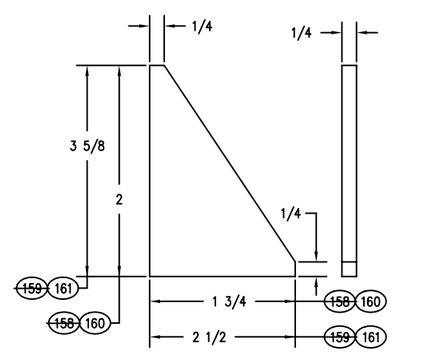

DETAIL 64-A
GUSSET (158) (159) OR (160) (161)
SCALE:12=1'-0

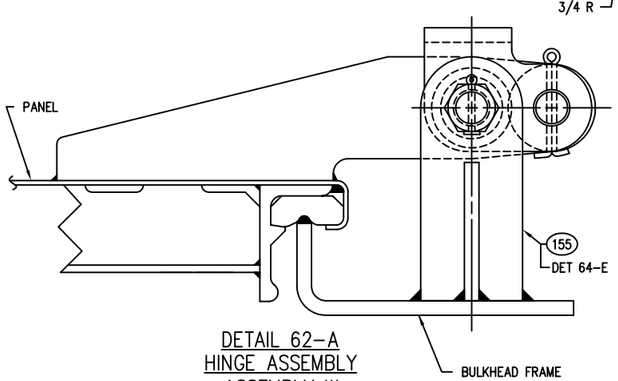

DETAIL 62-A
HINGE ASSEMBLY
ASSEMBLY W RH SHOWN
ASSEMBLY X LH TO OPP HAND
LOW TYPE MODIFIED, FOR 36" WIDE 2 HANDLE DOORS ONLY
FOR INFO NOT SHOWN SEE DETAIL 59-C
SCALE:12=1'-0

NOTE: DETAIL 62-A IS FOR IDENTIFICATION OF MAINTENANCE REPLACEMENT PARTS ONLY.

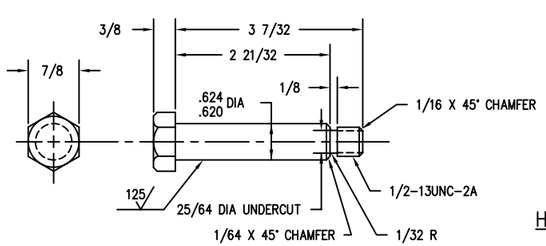

DETAIL 60-A
HINGE PIN (164)
SCALE:12=1'-0

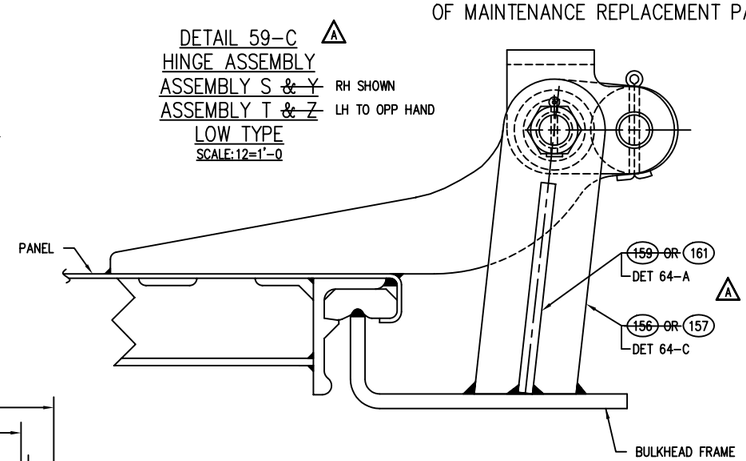

DETAIL 58-B
HINGE ASSEMBLY
ASSEMBLY U & AA RH SHOWN
ASSEMBLY V & BB LH TO OPP HAND
HIGH TYPE, ONLY TO BE USED WHEN DOOR MUST SWING 180°
FOR INFO NOT SHOWN SEE DETAIL 59-C
SCALE:12=1'-0

DRAWING 803-6397269 SHEET 8 REV A

DEPARTMENT OF THE NAVY NAVAL SEA SYSTEMS COMMAND WASHINGTON, D.C. 20362-5101	SIZE	CAGE CODE	ESWBS	DRAWING NO.	REV
DRAWN	F	53711	803	6397269	A
ISSUED	SCALE: AS SHOWN	MASS		SHEET 8	

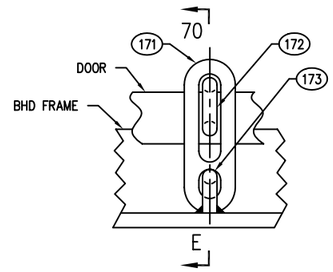

DETAIL 72-E
HASP ASSEMBLY
ASSEMBLY CC
OUTSIDE TYPE
SCALE:12=1'-0

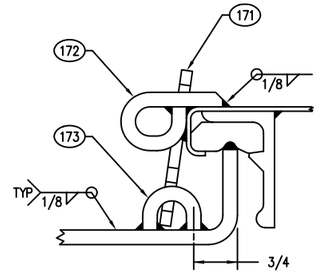

SECTION 70-E
(DETAIL 72-E)
SCALE:12=1'-0

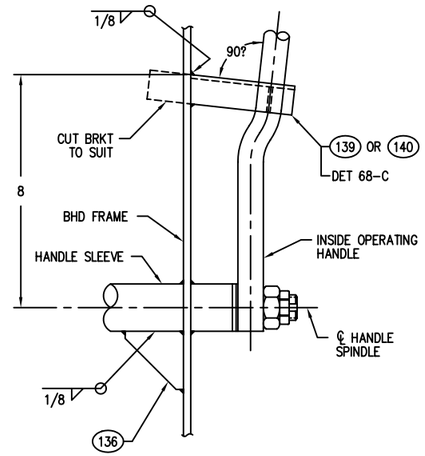

SECTION 69-E
(DETAIL 43-A)
SCALE:6=1'-0

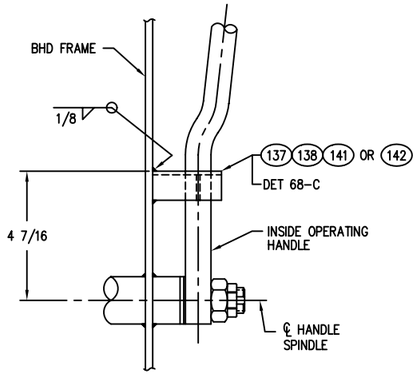

SECTION 67-E
(DETAIL 43-A)
SCALE:6=1'-0

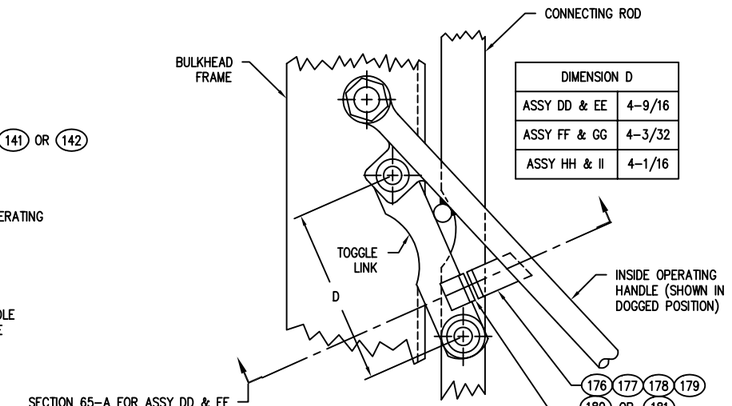

DIMENSION D	
ASSY DD & EE	4-9/16
ASSY FF & GG	4-3/32
ASSY HH & II	4-1/16

DETAIL 66-E
HASP ASSEMBLY
ASSEMBLY EE, GG & II LH SHOWN
ASSEMBLY DD, FF & HH RH TO OPP HAND
INSIDE TYPE
SCALE:6=1'-0

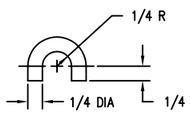

DETAIL 72-D
HASP EYE 173
SCALE:12=1'-0

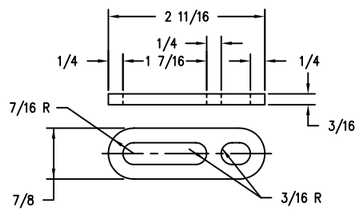

DETAIL 71-D
PADLOCK HASP 171
SCALE:12=1'-0

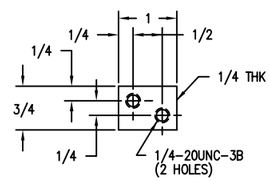

DETAIL 69-C
TAPPED PLATE 145
SCALE:12=1'-0

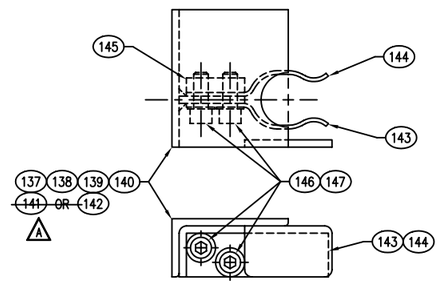

DETAIL 68-C
SPRING CLIP ASSY LH SHOWN
(SECTION 67-E & 69-E) RH TO OPP HAND
SCALE:12=1'-0

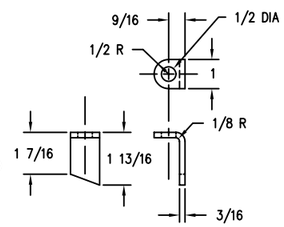

DETAIL 66-C
PADLOCK EYE 178 LH SHOWN
SCALE:6=1'-0 179 RH TO OPP HAND

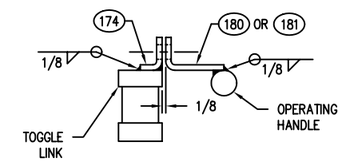

SECTION 65-C
(DETAIL 66-E)
SCALE:6=1'-0

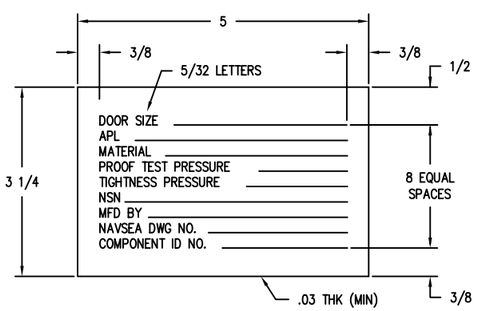

4 PLACES

DETAIL 71-B A
LABEL PLATE 4 OR 5
SCALE:12=1'-0

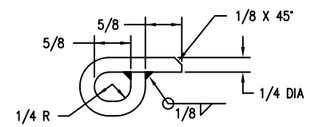

DETAIL 70-C
PADLOCK EYE 172
SCALE:12=1'-0

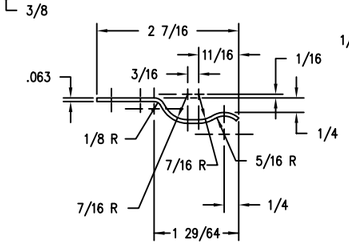

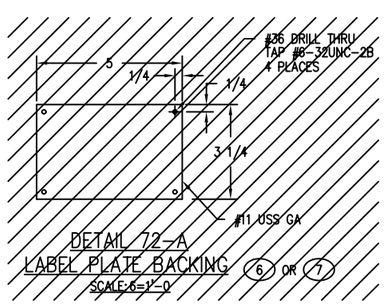

DETAIL 72-A
LABEL PLATE BACKING 6 OR 7
SCALE:6=1'-0
A

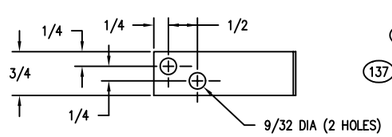

DETAIL 70-A
SPRING CLIP 143 SHOWN
SCALE:12=1'-0 144 TO OPP HAND

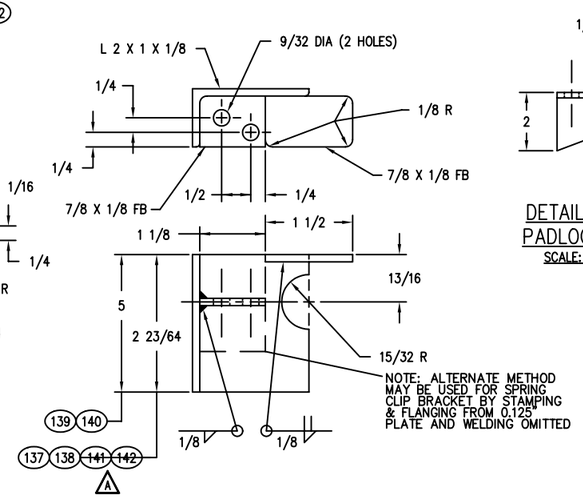

DETAIL 69-A
SPRING CLIP BRACKET
SCALE:12=1'-0

A
140 & 138 OR 142 LH SHOWN
139 & 137 OR 141 RH TO OPP HAND

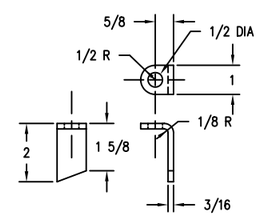

DETAIL 68-B
PADLOCK EYE 180 LH SHOWN
SCALE:6=1'-0 181 RH TO OPP HAND

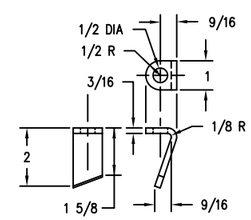

DETAIL 66-B
PADLOCK EYE 176 LH SHOWN
SCALE:6=1'-0 177 RH TO OPP HAND

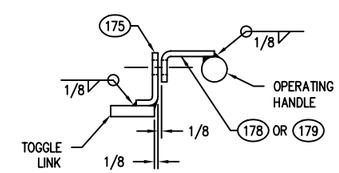

SECTION 65-B
(DETAIL 66-E)
SCALE:6=1'-0

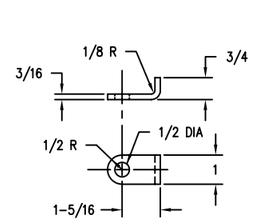

DETAIL 67-A
PADLOCK EYE 175
SCALE:6=1'-0

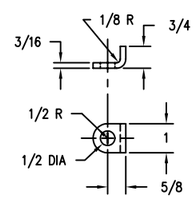

DETAIL 66-A
PADLOCK EYE 174
SCALE:6=1'-0

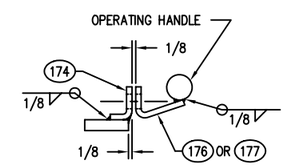

SECTION 65-A
(DETAIL 66-E)
SCALE:6=1'-0

DEPARTMENT OF THE NAVY NAVAL SEA SYSTEMS COMMAND WASHINGTON, D.C. 20362-5101					
DRAWN	SIZE	CAGE CODE	ESWBS	DRAWING NO.	REV
ISSUED	F	53711	803	6397269	A
	SCALE: AS SHOWN	MASS		SHEET 9	

DRAWING 803-6397269 SHEET 9 REV A

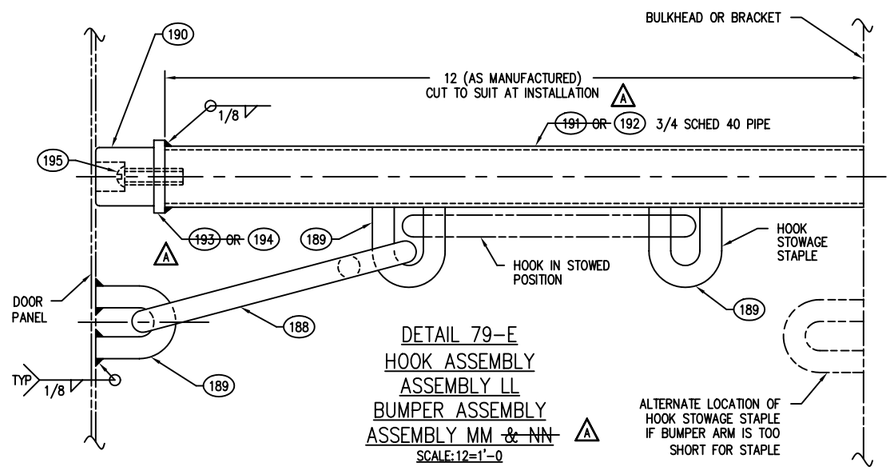

DETAIL 79-E
HOOK ASSEMBLY
ASSEMBLY LL
BUMPER ASSEMBLY
ASSEMBLY MM ~~& NN~~ A
SCALE:12=1'-0

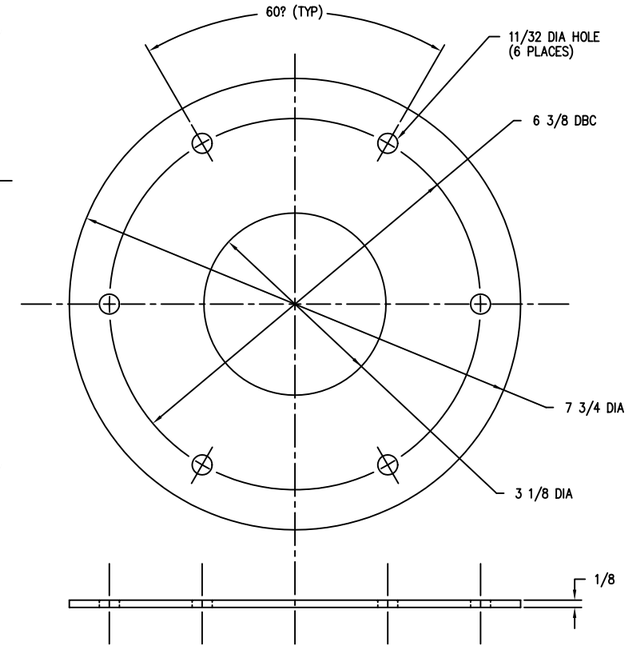

DETAIL 76-D
GASKET 185
SCALE:12=1'-0

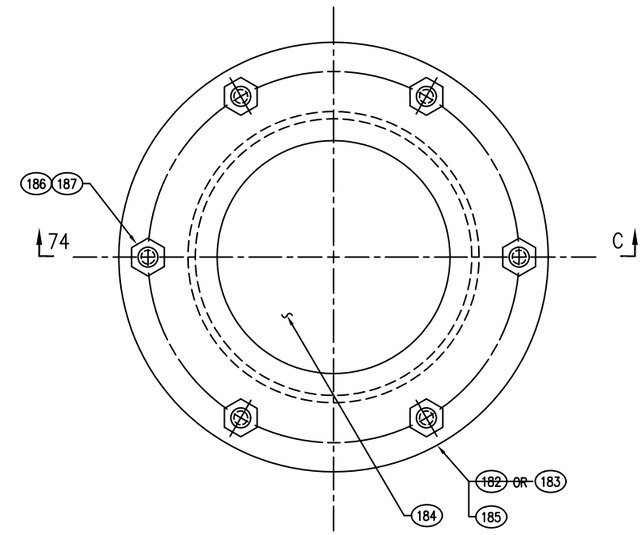

DETAIL 74-D A
INSIDE VIEW
FIXED LIGHT ASSEMBLY
ASSEMBLY JJ ~~& KK~~
SCALE:12=1'-0

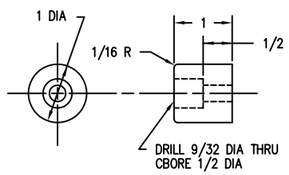

DETAIL 80-D
BUMPER 190
SCALE:12=1'-0

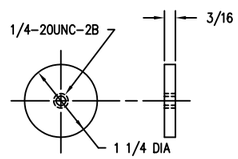

DETAIL 79-D A
CAP ~~193~~ OR 194
SCALE:12=1'-0

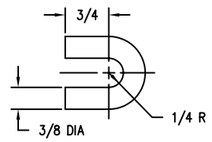

DETAIL 78-D
HOOK STAPLE 189
SCALE:12=1'-0

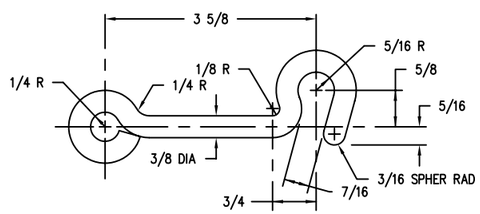

DETAIL 78-B
HOOK 188
SCALE:12=1'-0

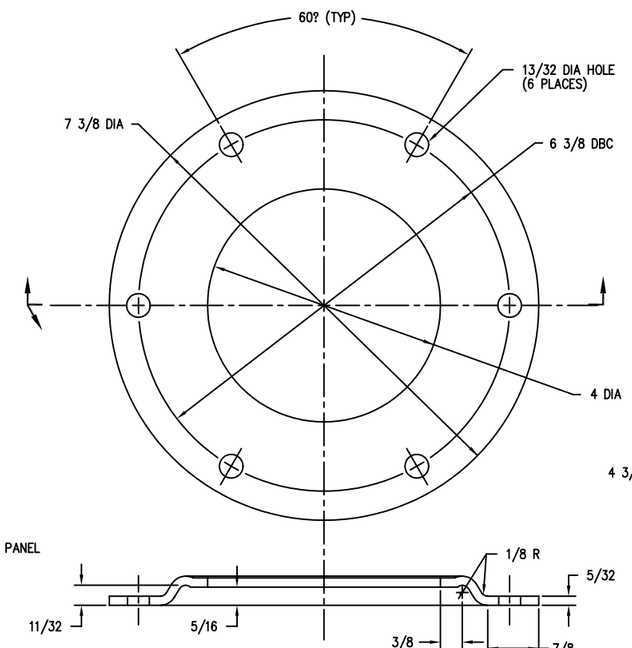

DETAIL 76-A A
FRAME ~~182~~ OR 183
SCALE:12=1'-0

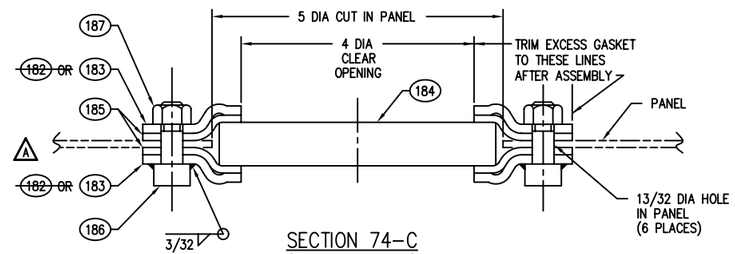

SECTION 74-C
(DETAIL 74-D)
SCALE:12=1'-0

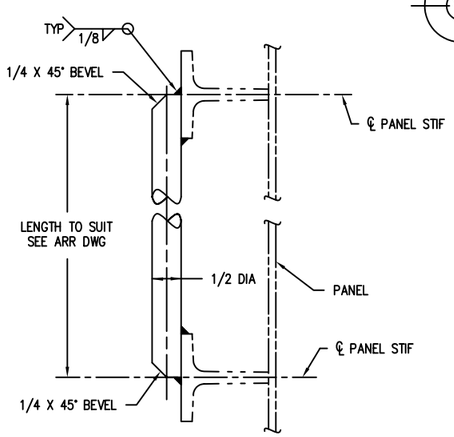

DETAIL 79-A A
GRAB HANDLE-INSIDE 10 ~~OR~~ 11
SCALE:12=1'-0

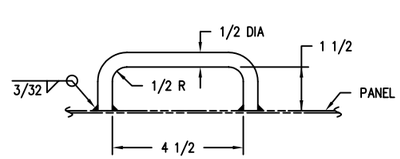

DETAIL 78-A A
GRAB HANDLE-OUTSIDE 8 ~~OR~~ 9
SCALE:6=1'-0

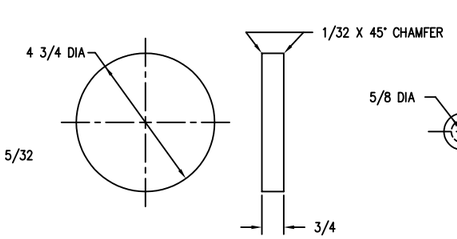

DETAIL 75-A
LENS 184
SCALE:6=1'-0

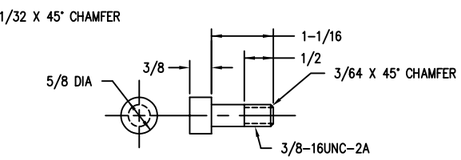

DETAIL 73-A
STUD 186
SCALE:12=1'-0

DEPARTMENT OF THE NAVY NAVAL SEA SYSTEMS COMMAND WASHINGTON, D.C. 20362-5101	SIZE	CAGE CODE	ESWBS	DRAWING NO.	REV
DRAWN	F	53711	803	6397269	A
ISSUED	SCALE: AS SHOWN	MASS		SHEET 10	

DRAWING 803-6397269 SHEET 10 REV A

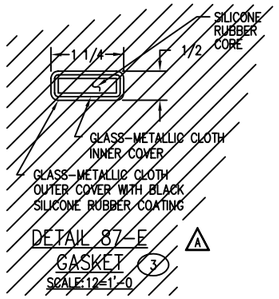

DETAIL 87-E
GASKET (3)
SCALE:12=1'-0

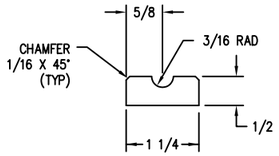

DETAIL 86-F
GASKET
(1) OR (2)
SCALE:12=1'-0

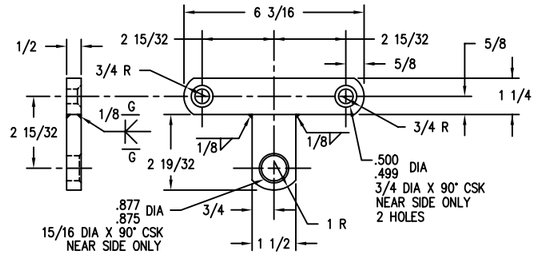

DETAIL 85-E
BELL CRANK-DOG (69) OR (70)
SCALE:6=1'-0

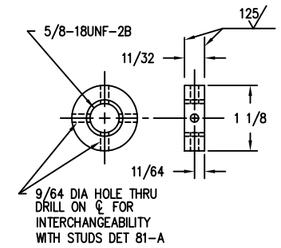

DETAIL 83-E
COLLAR (92)
SCALE:12=1'0

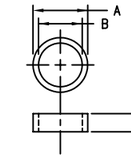

PC NO.	NAME	DIM A	DIM B	DIM C
83	BEARING-TOGGLE LINK & OPR HANDLE	.9380 .9370	.7515 .7505	5/8
82	BEARING DOG LEVER	.9380 .9370	.7515 .7505	1/2
81	BEARING CONNECTING ROD	.9380 .9370	.7515 .7505	3/8

DETAIL 81-E
BEARING (81) (82) (83)
SCALE:12=1'-0

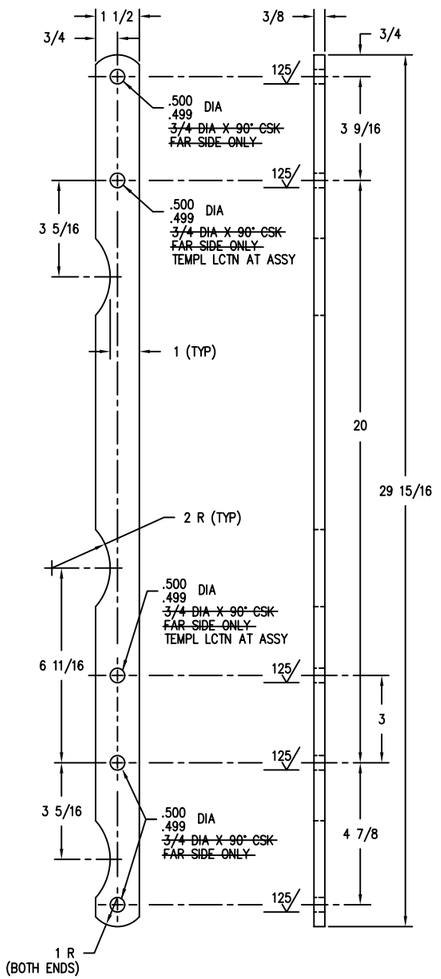

DETAIL 87-A
CONNECTING ROD
HANDLE SIDE
SCALE:6=1'-0
(41) LH SHOWN
(40) RH TO OPP HAND

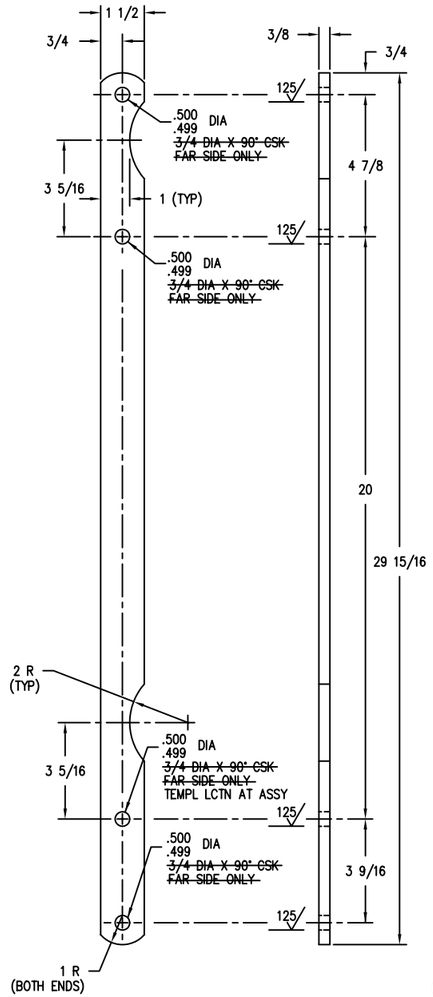

DETAIL 86-A
CONNECTING ROD
HINGE SIDE
SCALE:6=1'-0
(27) LH SHOWN
(26) RH TO OPP HAND

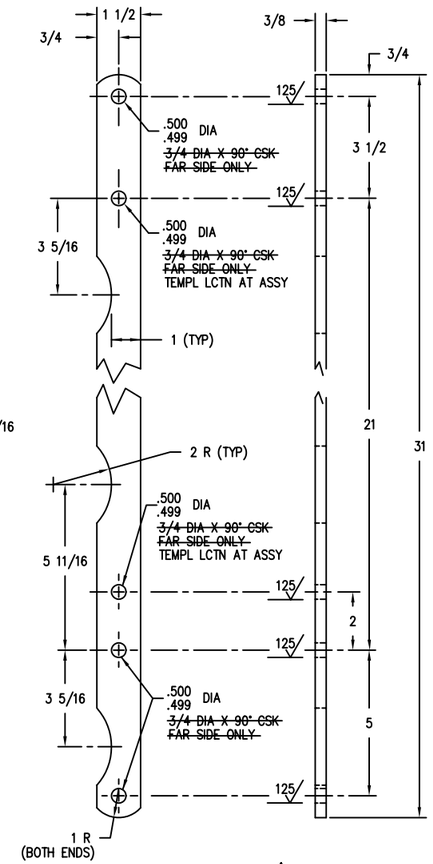

DETAIL 84-A
CONNECTING ROD
HANDLE SIDE
SCALE: 6=1'-0
(45) OR (51) LH SHOWN
(44) OR (50) RH TO OPP HAND

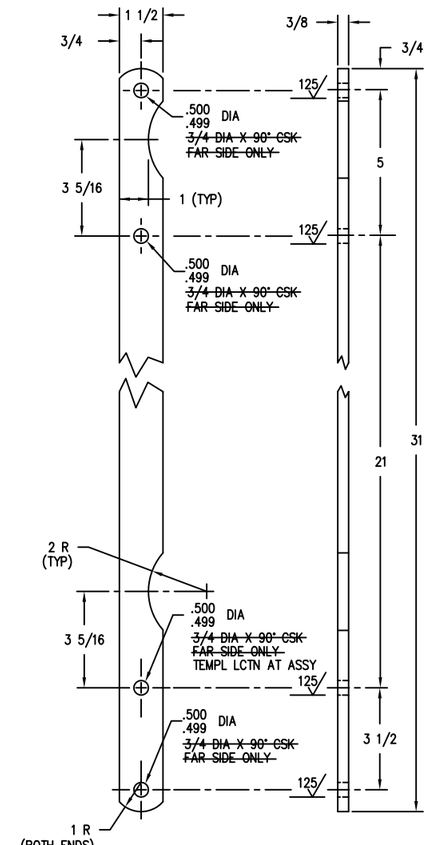

DETAIL 83-A
CONNECTING ROD
HINGE SIDE
SCALE: 6=1'-0
(31) OR (35) LH SHOWN
(30) OR (34) RH TO OPP HAND

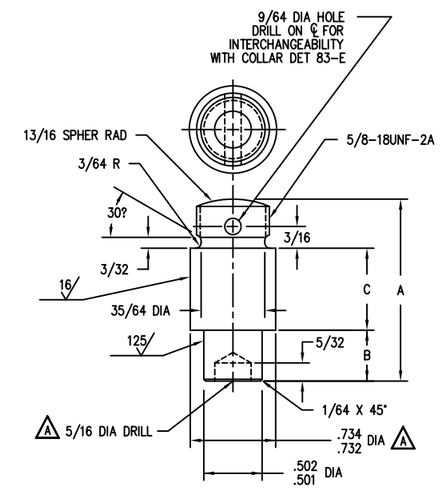

PC NO.	NAME	DIM A	DIM B	DIM C
91	STUD DOG LEVER/CONN ROD	1-55/64	7/16	1-1/64
90	STUD CONN ROD/CONN ROD	1-7/8	9/16	57/64
89	STUD-TOGGLE LINK/DOG LEVER	2-9/64	7/16	1-9/32
88	STUD OPERATING HANDLE	1-13/16	11/16	45/64
87	STUD CONNECTING ROD	1-7/16	9/16	29/64
86	STUD CONNECTING ROD	1-5/16	7/16	29/64
85	STUD DOG LEVER	1-7/16	7/16	37/64
84	STUD-TOGGLE LINK & OPR HANDLE	1-9/16	7/16	45/64

DETAIL 81-A
STUD
SCALE:24=1'-0
(84) (85) (86) (87) (88) (89) (90) (91)

DRAWING 803-6397269 SHEET 11 REV A

DEPARTMENT OF THE NAVY NAVAL SEA SYSTEMS COMMAND WASHINGTON, D.C. 20362-5101	SIZE	CAGE CODE	ESWBS	DRAWING NO.	REV
DRAWN	F	53711	803	6397269	A
ISSUED	SCALE: AS SHOWN	MASS		SHEET 11	

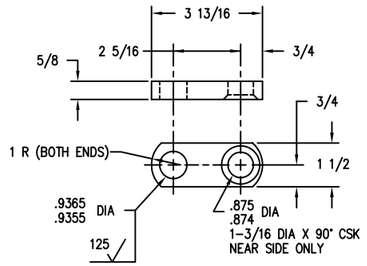

DETAIL 95-E
CONNECTING ROD – TOGGLE LINK (79)
SCALE:6=1'-0

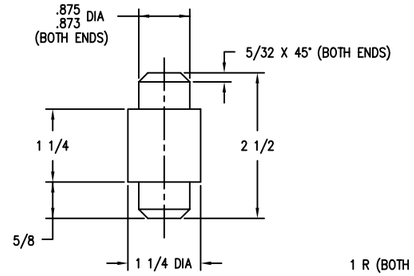

DETAIL 94-E
CONNECTOR – TOGGLE LINK (80)
SCALE:12=1'-0

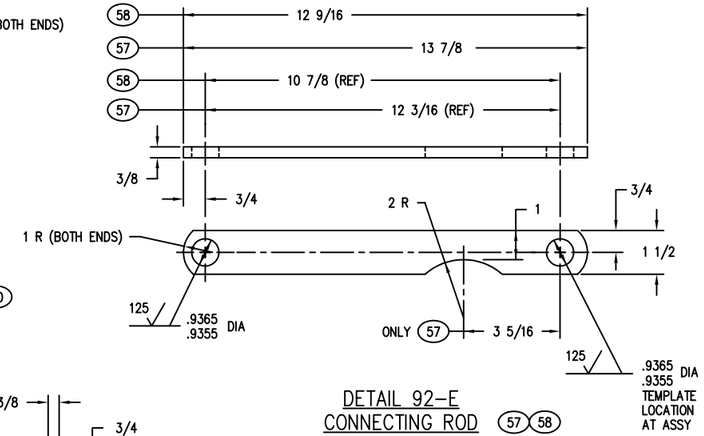

DETAIL 92-E
CONNECTING ROD
CORNER (57)(58)
SCALE:6=1'-0

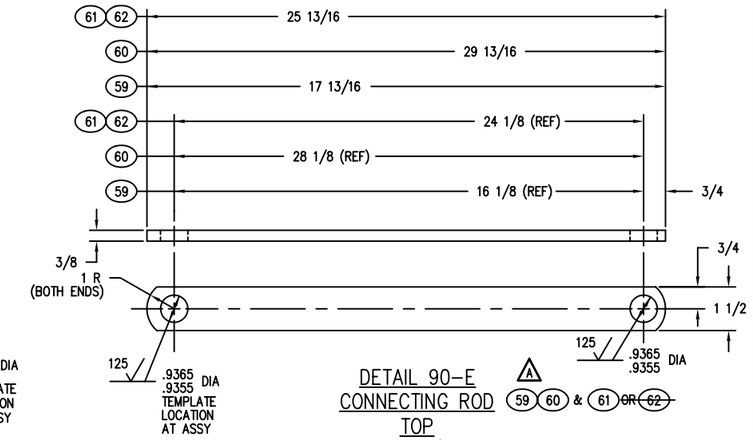

DETAIL 90-E
CONNECTING ROD
TOP (59)(60) & (61) ~~OR (62)~~
SCALE:6=1'-0

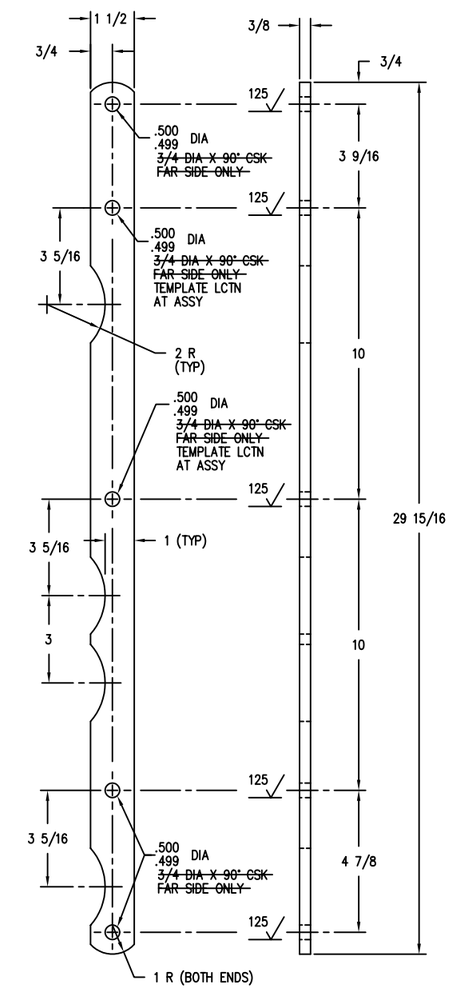

DETAIL 95-A
CONNECTING ROD
HANDLE SIDE (43) ~~LH AS SHOWN~~ (42) ~~RH TO OPP HAND~~
SCALE:6=1'-0

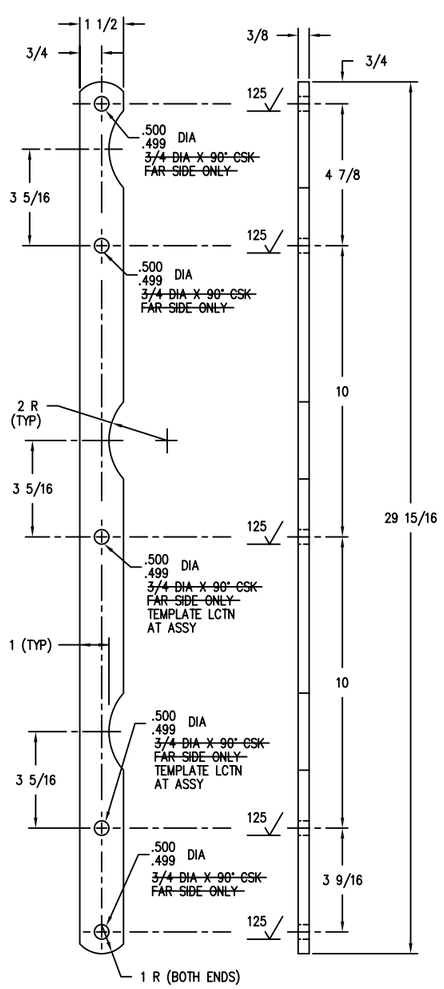

DETAIL 93-A
CONNECTING ROD
HINGE SIDE (29) ~~LH AS SHOWN~~ (28) ~~RH TO OPP HAND~~
SCALE:6=1'-0

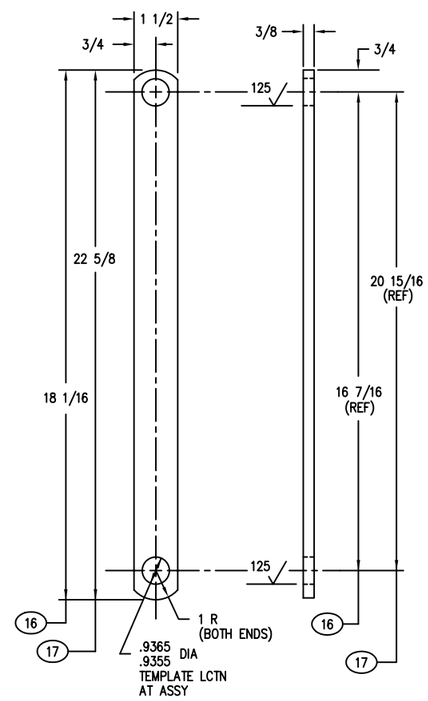

DETAIL 92-A
CONNECTING LINK (16)(17)
HINGE SIDE
SCALE:6=1'-0

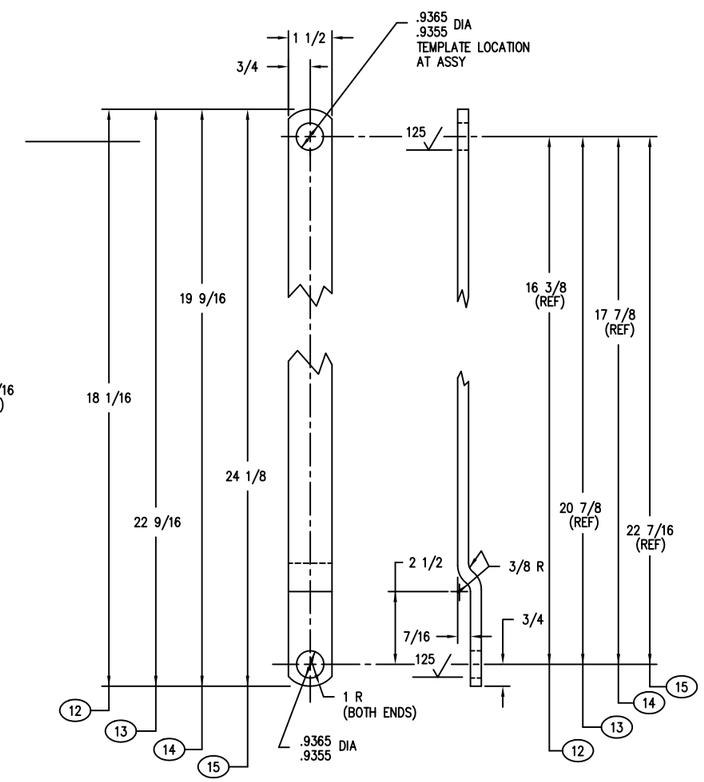

DETAIL 90-A
CONNECTING LINK
HANDLE SIDE (12)(13)
HINGE SIDE (14)(15)
SCALE:6=1'-0

DEPARTMENT OF THE NAVY NAVAL SEA SYSTEMS COMMAND WASHINGTON, D.C. 20362-5101	SIZE	CAGE CODE	ESWBS	DRAWING NO.	REV
DRAWN	F	53711	803	6397269	A
ISSUED	SCALE: AS SHOWN	MASS		SHEET 12	

DRAWING 803-6397269 SHEET 12 REV A

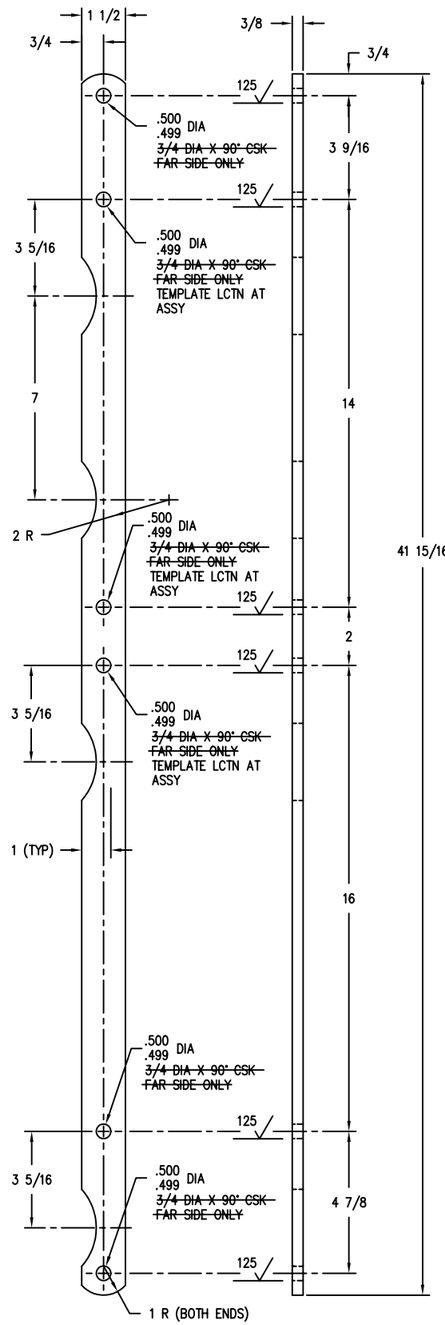

DETAIL 103–A
CONNECTING ROD
HANDLE SIDE
SCALE: 6=1'–0

(A) ~~(49) LH SHOWN~~
(48) ~~RH TO OPP HAND~~

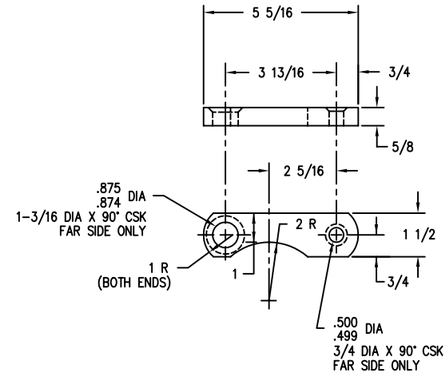

DETAIL 101–E
TOGGLE LINK
SCALE: 6=1'–0

(74) LH SHOWN
(73) RH TO OPP HAND

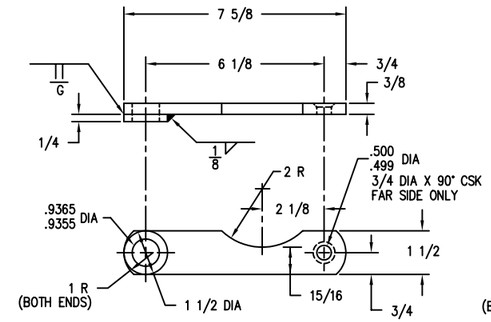

DETAIL 99–E
TOGGLE LINK
SCALE: 6=1–'0

(72) LH SHOWN
(71) RH TO OPP HAND

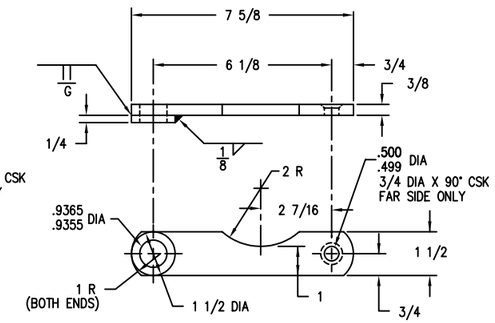

DETAIL 98–E
TOGGLE LINK
SCALE: 6=1–'0

(A)
(76) ~~OR (78) LH SHOWN~~
(75) ~~OR (77) RH TO OPP HAND~~

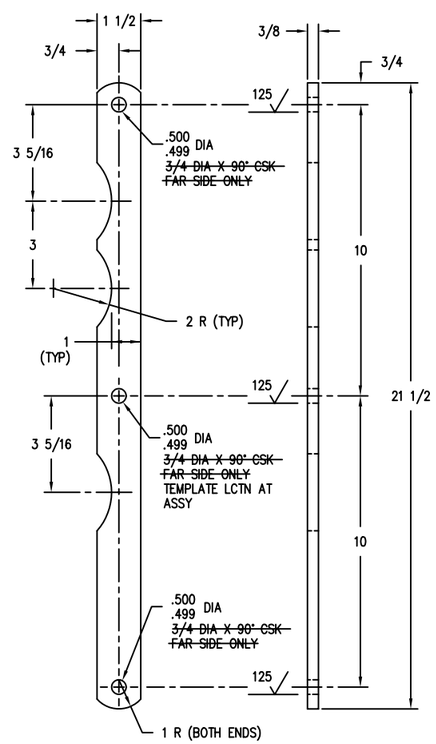

DETAIL 101–A
CONNECTING ROD
HANDLE SIDE
SCALE: 6=1'–0

(A)
(39) ~~LH SHOWN~~
(38) ~~RH TO OPP HAND~~

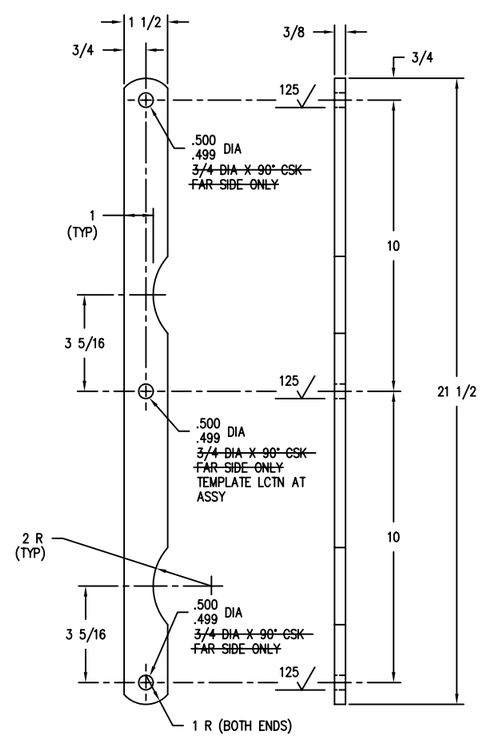

DETAIL 100–A
CONNECTING ROD
HINGE SIDE
SCALE: 6=1'–0

(A)
(25) ~~LH SHOWN~~
(24) ~~RH TO OPP HAND~~

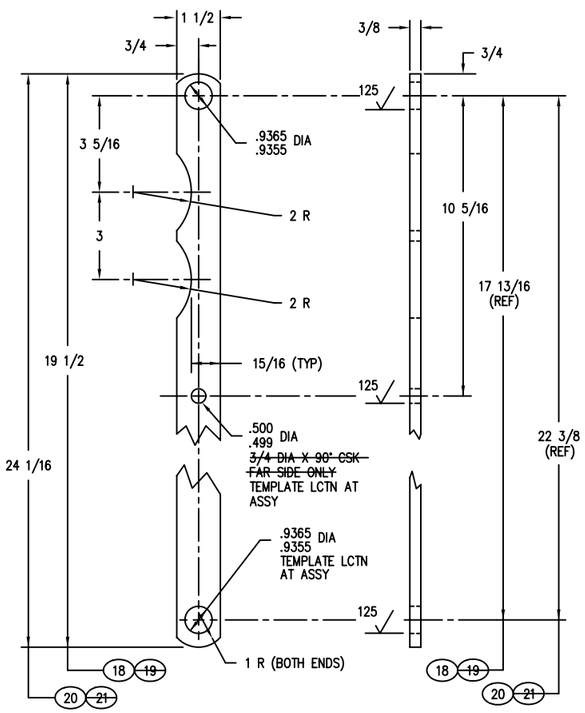

DETAIL 98–A
CONNECTING LINK
HANDLE SIDE
SCALE: 6=1'–0

(A)
(19) (21) ~~LH SHOWN~~
(18) (20) ~~RH TO OPP HAND~~

DEPARTMENT OF THE NAVY NAVAL SEA SYSTEMS COMMAND WASHINGTON, D.C. 20362-5101	SIZE	CAGE CODE	ESWBS	DRAWING NO.	REV
DRAWN	F	53711	803	6397269	A
ISSUED	SCALE: AS SHOWN	MASS		SHEET 13	

DRAWING 803–6397269 SHEET 13 REV A

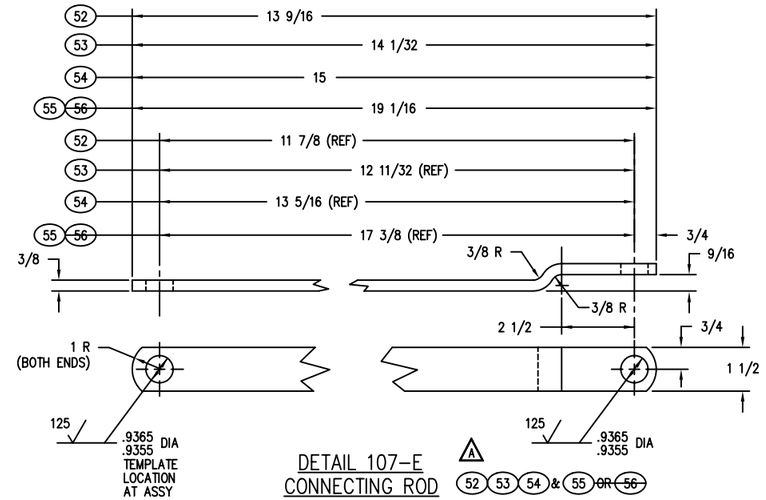

DETAIL 107-E
CONNECTING ROD
CORNER
SCALE: 6=1'-0

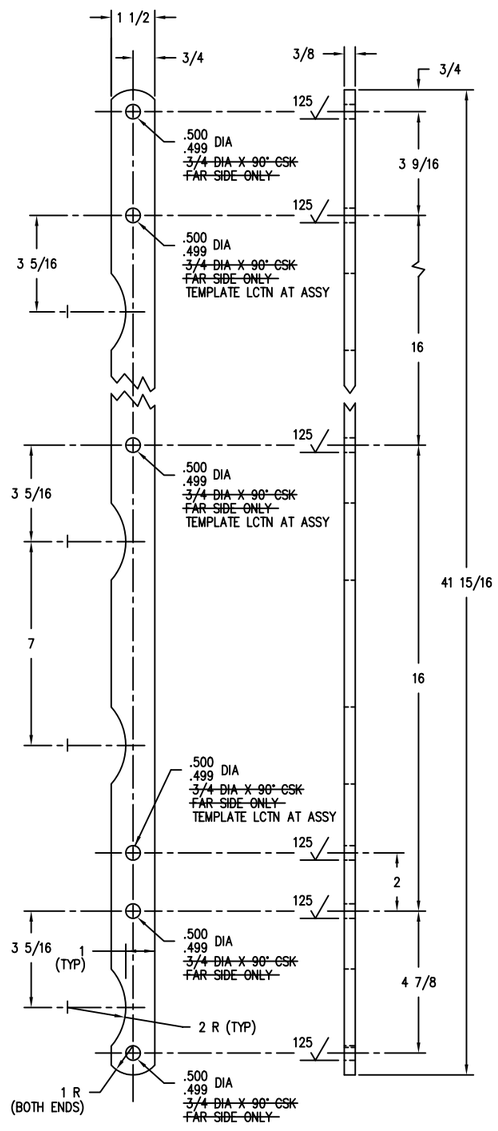

DETAIL 111-A
CONNECTING ROD
HANDLE SIDE
SCALE: 6=1'-0

A
47 LH SHOWN
46 RH TO OPP HAND

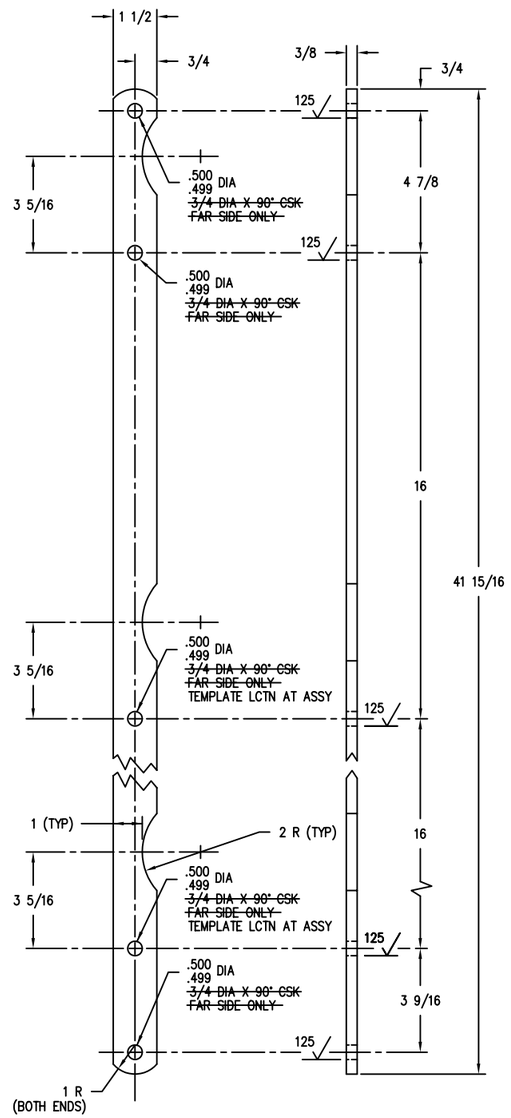

DETAIL 109-A
CONNECTING ROD
HINGE SIDE
SCALE: 6=1'-0

A
33 LH SHOWN
32 RH TO OPP HAND

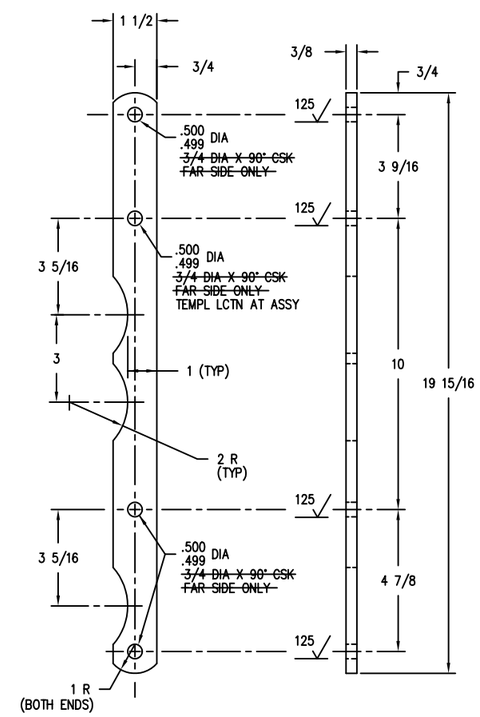

DETAIL 108-A
CONNECTING ROD
HANDLE SIDE
SCALE: 6=1'-0

A
37 LH SHOWN
36 RH TO OPP HAND

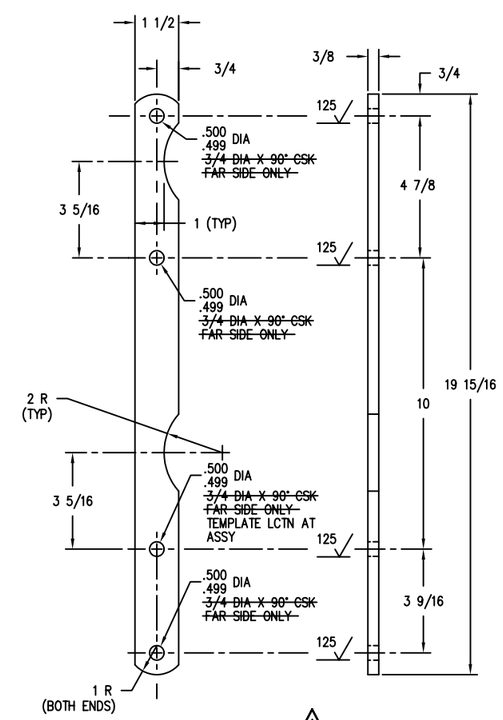

DETAIL 106-A
CONNECTING ROD
HINGE SIDE
SCALE: 6=1'-0

A
23 LH SHOWN
22 RH TO OPP HAND

DEPARTMENT OF THE NAVY NAVAL SEA SYSTEMS COMMAND WASHINGTON, D.C. 20362-5101					
DRAWN	SIZE	CAGE CODE	ESWBS	DRAWING NO.	REV
ISSUED	F	53711	803	6397269	A
	SCALE: AS SHOWN	MASS		SHEET 14	

DRAWING 803-6397269 SHEET 14 REV A

ITEM NO	DESCRIPTION	MFR	MFR PART NUMBER	MANUFACTURER'S ADDRESS
204	THRUST WASHER	KAMATICS	KJT818207V	KAMATICS CORP, P.O. BOX 3, BLOOMFIELD, CT
204	THRUST WASHER	GREENE TWEED	4769-5133-0460	GREENE TWEED, 1176 PEEVY RED, EAST GREENVILLE, PA
204	THRUST WASHER	ORKOT	GBZUE0132-TXMM	ALLIED MARINE SERVICES, 659 S WASHINGTON ST, ALEXANDRIA, VA
204	THRUST WASHER	THORDON	TG-14195-1	FLEETWOOD IND PRODUCTS, 305 FRONT ST, ESSINGTON, PA
203	YOKE BUSHING	KAMATICS	KJB600907B	KAMATICS CORP, P.O. BOX 3, BLOOMFIELD, CT
203	YOKE BUSHING	GREENE TWEED	4769-5153-0390	GREENE TWEED, 1176 PEEVY RED, EAST GREENVILLE, PA
203	YOKE BUSHING	ORKOT	GBZUE1050-TXMM	ALLIED MARINE SERVICES, 659 S WASHINGTON ST, ALEXANDRIA, VA
203	YOKE BUSHING	THORDON	TG-14195-2	FLEETWOOD IND PRODUCTS, 305 FRONT ST, ESSINGTON, PA
202	HINGE PAD BUSHING	KAMATICS	KJB586007B	KAMATICS CORP, P.O. BOX 3, BLOOMFIELD, CT
202	HINGE PAD BUSHING	GREENE TWEED	4769-5132-0390	GREENE TWEED, 1176 PEEVY RD, EAST GREENVILLE, PA
202	HINGE PAD BUSHING	ORKOT	GBZUE1049-TXMM	ALLIED MARINE SERVICES, 659 S WASHINGTON ST, ALEXANDRIA, VA
202	HINGE PAD BUSHING	THORDON	TG-14195-3	FLEETWOOD IND PRODUCTS, 305 FRONT ST, ESSINGTON, PA

TABLE 1 (SEE NOTE 14)

SOURCE CONTROL

N-2	M-2	L-2	K-2	J-2	I-2	H-2	G-2	F-2	E-2	D-2	C-2	B-2	A-2	Z-1	Y-1	X-1	W-1	V-1	U-1	T-1	S-1	R-1	Q-1	P-1	O-1	N-1	M-1	L-1	K-1	J-1	I-1	H-1	G-1	F-1	E-1	D-1	C-1	B-1	A-1	PC NO.	NAME	REF NO. (DET ON)	PC NO. (DET ON)	ZONE (DET ON)	MATERIAL	IDENTIFYING NO. OR SPECIFICATION	ZONE	REMARKS
												2	2																											91	STUD DOG LEVER/CONN ROD	–	–	–	SST	ASTM-A276 TYPE 316, COND A	81-A	
																																						1		90	STUD CONN ROD/CONN ROD	–	–	–	SST	ASTM-A276 TYPE 316, COND A	81-A	
												1	1			1	1																							89	STUD TOGGLE LINK/DOG LEVER	–	–	–	SST	ASTM-A276 TYPE 316, COND A	81-A	
1	1																																							88	STUD OPERATING HANDLE	–	–	–	SST	ASTM-A276 TYPE 316, COND A	81-A	
																																				1	1		1	87	STUD CONNECTING ROD	–	–	–	SST	ASTM-A276 TYPE 316, COND A	81-A	
		2	2	2	2	2	2	2	2					2	2	2	2	2	2								2	2	2		2	2	2	2					86	STUD CONNECTING ROD	–	–	–	SST	ASTM-A276 TYPE 316, COND A	81-A	
		2	2	2	2	3	3	3	3					3	3	2	2	3	3								2	2	2		2	2	2	2					85	STUD DOG LEVER	–	–	–	SST	ASTM-A276 TYPE 316, COND A	81-A	
								1	1									1	1	1	1	1	1	1	1	1			1	1			1	1					84	STUD-TOGGLE LINK & OPR HANDLE	–	–	–	SST	ASTM-A276 TYPE 316, COND A	81-A	
1	1																																							80	CONNECTOR TOGGLE LINK	–	–	–	SST	ASTM-A276 TYPE 316, COND A	93-E	~~CF, ZINC PLATED NOTE 38 REF 2~~
1	1																																							79	CONNECTING ROD TOGGLE LINK	–	–	–	SST	ASTM-A276 TYPE 316, COND A	95-E	~~CF, ZINC PLATED NOTE 38 REF 2~~
																					1																			76	TOGGLE LINK LH	–	–	–	SST	ASTM-A276 TYPE 316 COND A	97-E	~~CF, ZINC PLATED NOTE 38 REF 2~~
																				1																				75	TOGGLE LINK RH	–	–	–	SST	ASTM-A276 TYPE 316 COND A	97-E	~~CF, ZINC PLATED NOTE 38 REF 2~~
1																																								74	TOGGLE LINK LH	–	–	–	SST	ASTM-A276 TYPE 316 COND A	101-E	~~CF, ZINC PLATED NOTE 38 REF 2~~
	1																																							73	TOGGLE LINK RH	–	–	–	SST	ASTM-A276 TYPE 316 COND A	101-E	~~CF, ZINC PLATED NOTE 38 REF 2~~
																							1																	72	TOGGLE LINK LH	–	–	–	SST	ASTM-A276 TYPE 316 COND A	99-E	~~CF, ZINC PLATED NOTE 38 REF 2~~
																						1																		71	TOGGLE LINK RH	–	–	–	SST	ASTM-A276 TYPE 316 COND A	99-E	~~CF, ZINC PLATED NOTE 38 REF 2~~
																																			1					69	BELL CRANK DOG	–	–	–	SST	ASTM-A276 TYPE 316 COND A	84-E	~~CF, ZINC PLATED NOTE 38 REF 2~~
																																				1				64	LEVER DOG	–	–	–	SST	ASTM-A276 TYPE 316 COND A	39-E	~~CF, ZINC PLATED NOTE 38 REF 2~~
																																					1	1		63	LEVER DOG	–	–	–	SST	ASTM-A276 TYPE 316 COND A	39-E	~~CF, ZINC PLATED NOTE 38 REF 2~~
																		1	1																					48	CONNECTING ROD ~~RH~~ HANDLE SIDE	–	–	–	SST	ASTM-A276 TYPE 316 COND A	103-A	~~CF, ZINC PLATED NOTE 38 REF 2~~
								1	1																															46	CONNECTING ROD ~~RH~~ HANDLE SIDE	–	–	–	SST	ASTM-A276 TYPE 316 COND A	111-A	~~CF, ZINC PLATED NOTE 38 REF 2~~
																													1	1										44	CONNECTING ROD ~~RH~~ HANDLE SIDE	–	–	–	SST	ASTM-A276 TYPE 316 COND A	84-A	~~CF, ZINC PLATED NOTE 38 REF 2~~
																1	1																							42	CONNECTING ROD ~~RH~~ HANDLE SIDE	–	–	–	SST	ASTM-A276 TYPE 316 COND A	95-A	~~CF, ZINC PLATED NOTE 38 REF 2~~
																																	1	1						40	CONNECTING ROD ~~RH~~ HANDLE SIDE	–	–	–	SST	ASTM-A276 TYPE 316 COND A	87-A	~~CF, ZINC PLATED NOTE 38 REF 2~~
												1	1																											38	CONNECTING ROD ~~RH~~ HANDLE SIDE	–	–	–	SST	ASTM-A276 TYPE 316 COND A	101-A	~~CF, ZINC PLATED NOTE 38 REF 2~~
				1	1																																			36	CONNECTING ROD ~~RH~~ HANDLE SIDE	–	–	–	SST	ASTM-A276 TYPE 316 COND A	108-A	~~CF, ZINC PLATED NOTE 38 REF 2~~
						1	1																																	32	CONNECTING ROD ~~RH~~ HINGE SIDE	–	–	–	SST	ASTM-A276 TYPE 316 COND A	109-A	~~CF, ZINC PLATED NOTE 38 REF 2~~
																											1	1												30	CONNECTING ROD ~~RH~~ HINGE SIDE	–	–	–	SST	ASTM-A276 TYPE 316 COND A	83-A	~~CF, ZINC PLATED NOTE 38 REF 2~~
														1	1																									28	CONNECTING ROD ~~RH~~ HINGE SIDE	–	–	–	SST	ASTM-A276 TYPE 316 COND A	93-A	~~CF, ZINC PLATED NOTE 38 REF 2~~
																																1	1							26	CONNECTING ROD ~~RH~~ HINGE SIDE	–	–	–	SST	ASTM-A276 TYPE 316 COND A	86-A	~~CF, ZINC PLATED NOTE 38 REF 2~~
										1	1																													24	CONNECTING ROD ~~RH~~ HINGE SIDE	–	–	–	SST	ASTM-A276 TYPE 316 COND A	100-A	~~CF, ZINC PLATED NOTE 38 REF 2~~
																																								22	CONNECTING ROD ~~RH~~ HINGE SIDE	–	–	–	SST	ASTM-A276 TYPE 316 COND A	106-A	~~CF, ZINC PLATED NOTE 38 REF 2~~
																								1	1															20	CONNECTING LINK HANDLE SIDE	–	–	–	SST	ASTM-A276 TYPE 316 COND A	98-A	~~CF, ZINC PLATED NOTE 38 REF 2~~
																										1	1													18	CONNECTING LINK HANDLE SIDE	–	–	–	SST	ASTM-A276 TYPE 316 COND A	98-A	~~CF, ZINC PLATED NOTE 38 REF 2~~

ASSEMBLY LETTER
QUANTITY PER ASSEMBLY

PARTS LIST

DEPARTMENT OF THE NAVY NAVAL SEA SYSTEMS COMMAND WASHINGTON, D.C. 20362-5101	SIZE	CAGE CODE	ESWBS	DRAWING NO.	REV
DRAWN	F	53711	803	6397269	A
ISSUED	SCALE: NONE	MASS		SHEET 15	

DRAWING 803-6397269 SHEET 15 REV A

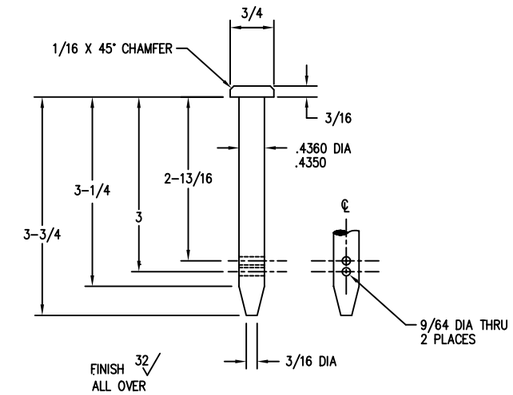

DETAIL 123-E
HINGE PIN
(SECTION 130-A)
SCALE: 12=1'-0
198

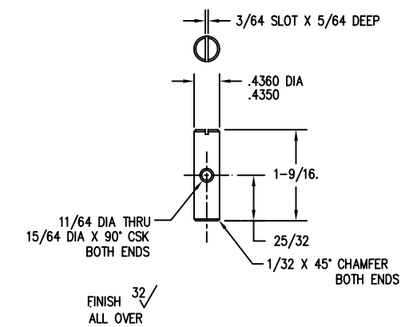

DETAIL 121-E
YOKE PIN
(SECTION 133-A)
SCALE: 12=1'-0
199

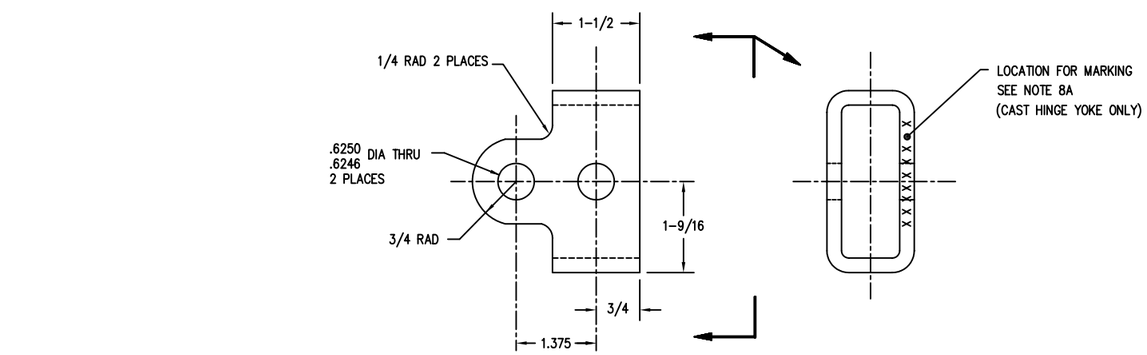

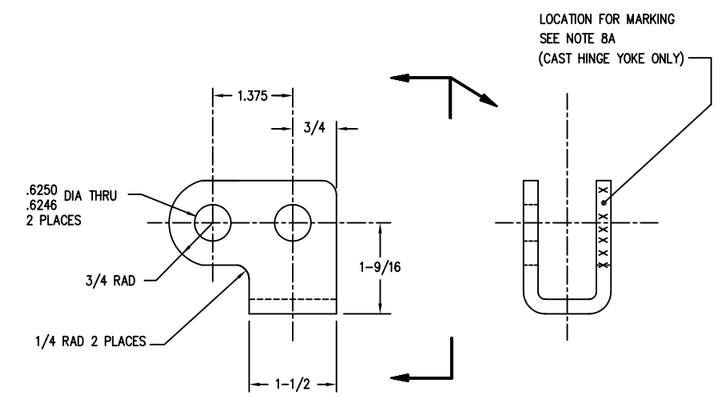

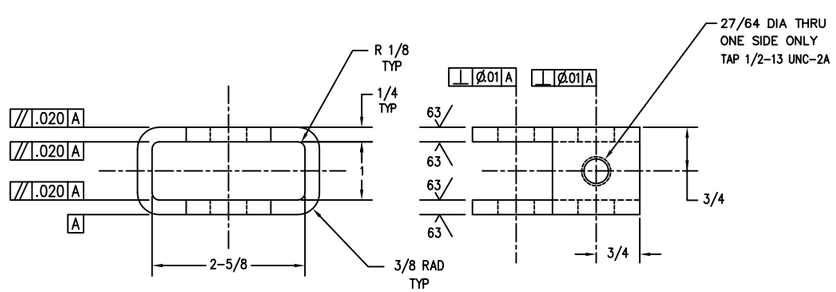

DETAIL 126-A
HINGE YOKE, LOW
CAST CONSTRUCTION
(SECTIONS 130-A & 133-A)
SCALE: 12=1'-0
196

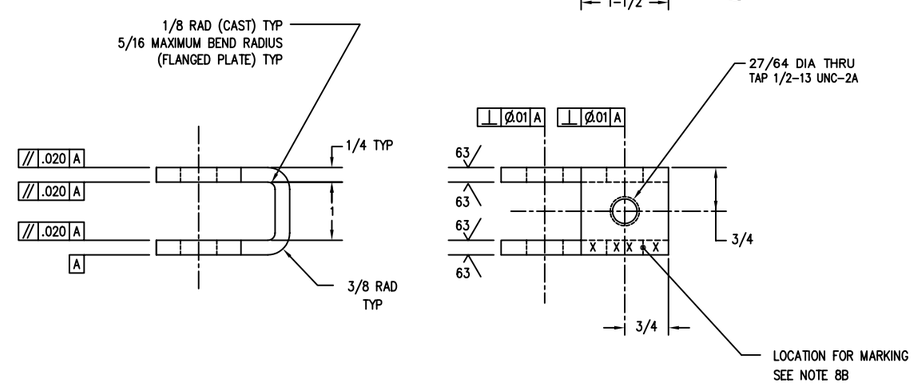

DETAIL 123-A
HINGE YOKE, HIGH
CAST OR FLANGED PLATE CONSTRUCTION
(SECTIONS 130-A & 133-A)
SCALE: 12=1'-0
197

DEPARTMENT OF THE NAVY NAVAL SEA SYSTEMS COMMAND WASHINGTON, D.C. 20362-5101	SIZE	CAGE CODE	ESWBS	DRAWING NO.	REV
DRAWN	F	53711	803	6397269	A
ISSUED	SCALE: AS SHOWN	MASS		SHEET 16	

DRAWING 803-6397269 SHEET 16 REV A

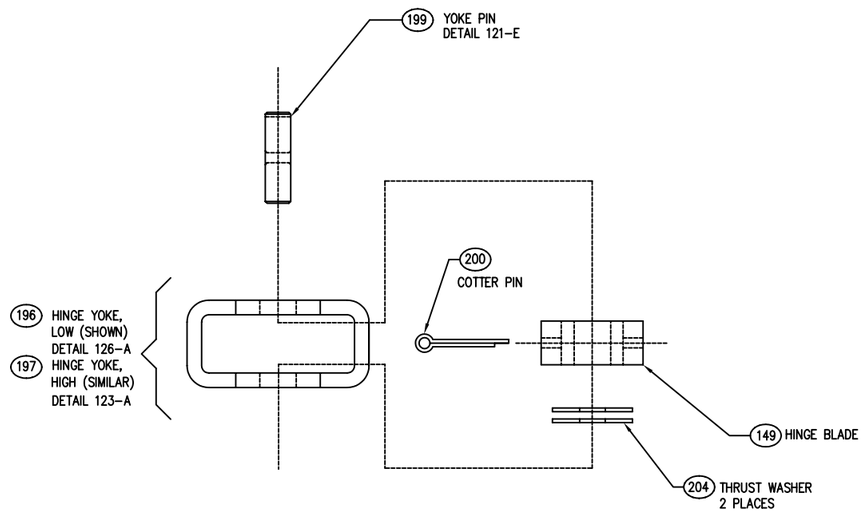

SECTION 133-A
EXPLODED VIEW
YOKE PIN ASSEMBLY
(DETAIL 139-A)
SCALE: 12=1'-0

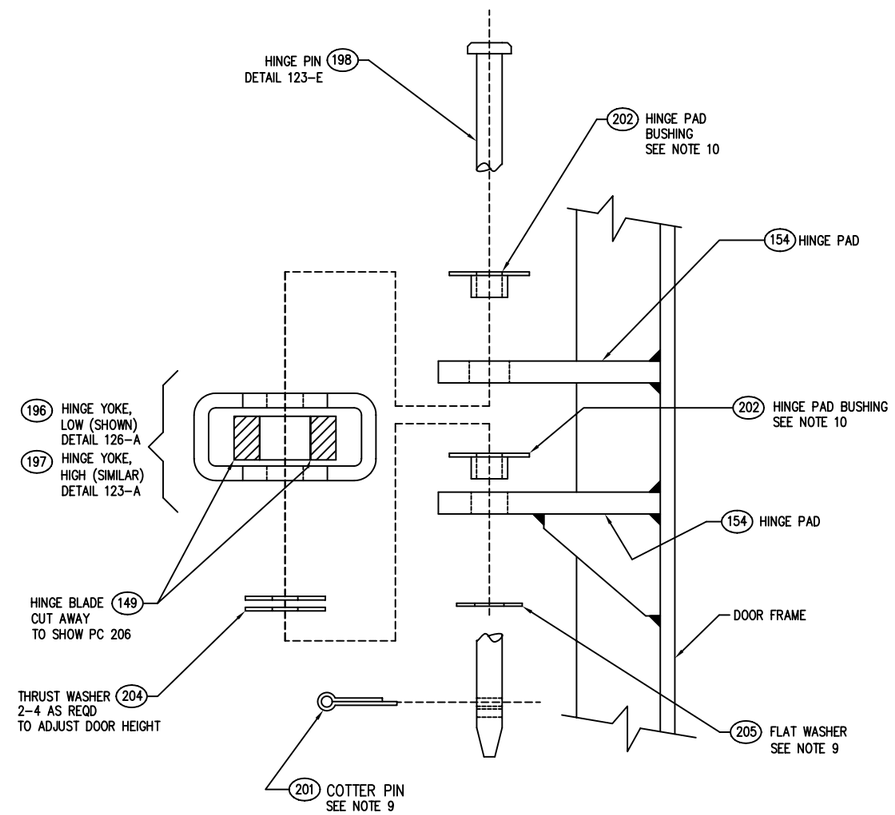

SECTION 130-A
EXPLODED VIEW
HINGE ASSEMBLY
(DETAIL 139-A)
SCALE: 12=1'-0

DRAWING 803-6397269 SHEET 17 REV A

DEPARTMENT OF THE NAVY NAVAL SEA SYSTEMS COMMAND WASHINGTON, D.C. 20362-5101	SIZE	CAGE CODE	ESWBS	DRAWING NO.	REV
DRAWN	F	53711	803	6397269	A
ISSUED	SCALE: AS SHOWN	MASS		SHEET 17	

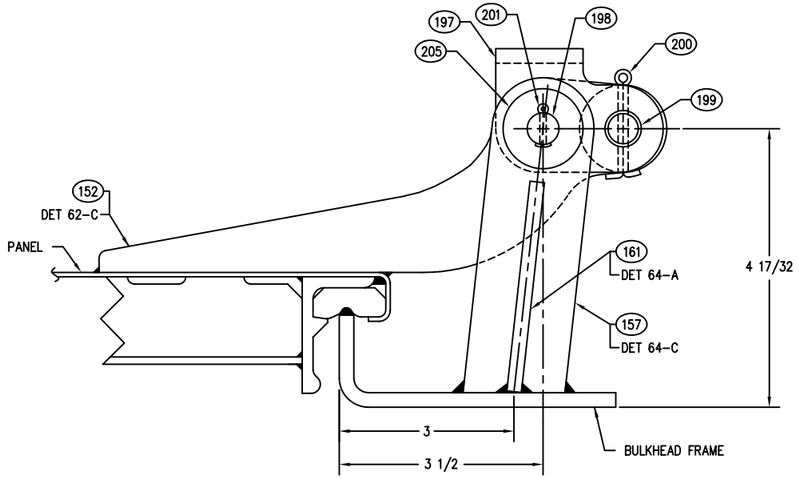

DETAIL 143-D
HINGE ASSEMBLY
ASSEMBLY QQ RH SHOWN
ASSEMBLY RR LH TO OPP HAND
HIGH TYPE, ONLY TO BE USED WHEN DOOR MUST SWING 180°
FOR INFO NOT SHOWN SEE DETAIL 139-A
SCALE:12=1'-0

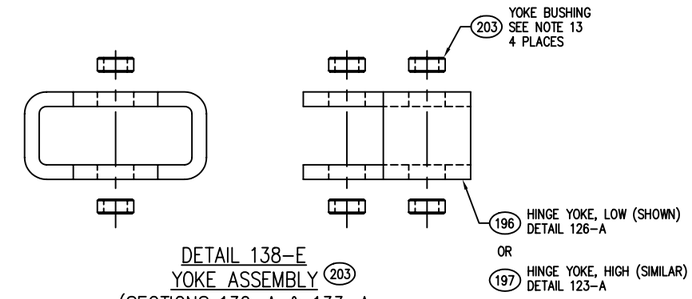

DETAIL 138-E
YOKE ASSEMBLY 203
(SECTIONS 130-A & 133-A
SCALE:12=1'-0

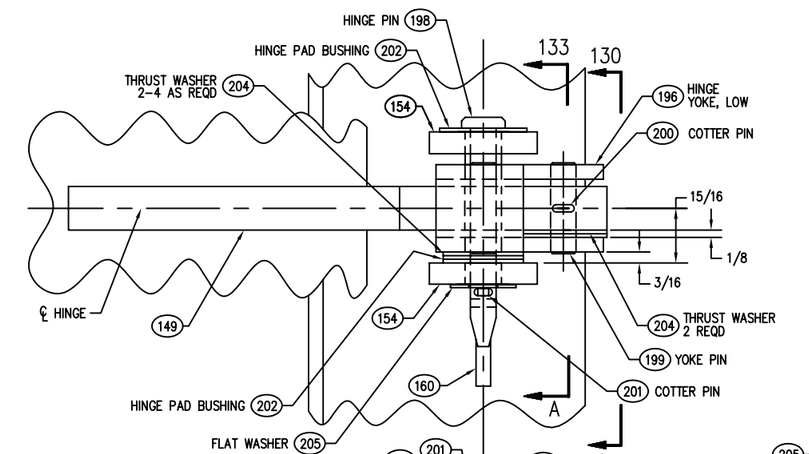

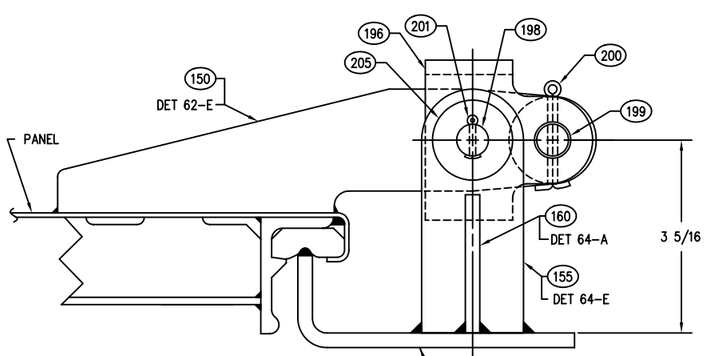

DETAIL 143-A
HINGE ASSEMBLY
ASSEMBLY SS RH SHOWN
ASSEMBLY TT LH TO OPP HAND
LOW TYPE MODIFIED, FOR 36" WIDE 2 HANDLE DOORS ONLY
FOR INFO NOT SHOWN SEE DETAIL 139-A
SCALE:12=1'-0

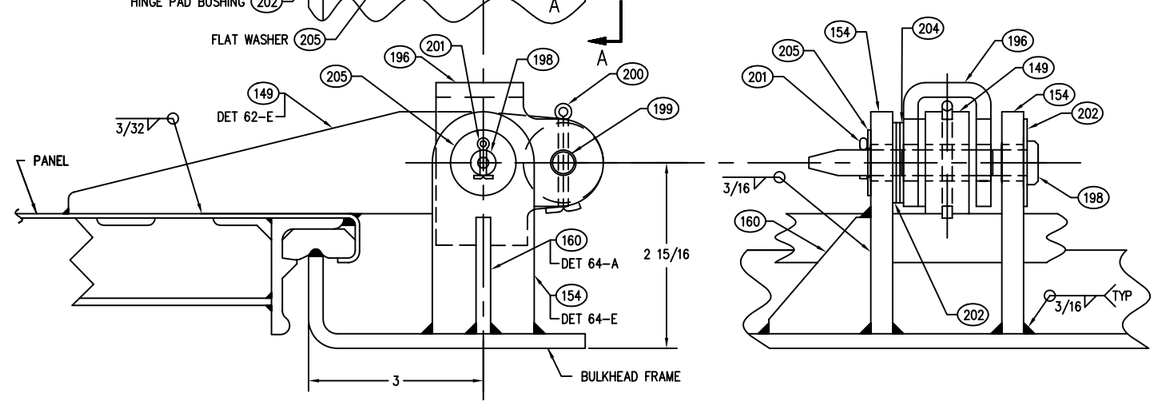

DETAIL 139-A
HINGE ASSEMBLY
ASSEMBLY OO RH SHOWN
ASSEMBLY PP LH TO OPP HAND
LOW TYPE
SCALE:12=1'-0

DRAWING 803-6397269 SHEET 18 REV A

DEPARTMENT OF THE NAVY NAVAL SEA SYSTEMS COMMAND WASHINGTON, D.C. 20362-5101	SIZE	CAGE CODE	ESWBS	DRAWING NO.	REV
DRAWN	F	53711	803	6397269	A
ISSUED	SCALE: AS SHOWN	MASS		SHEET 18	

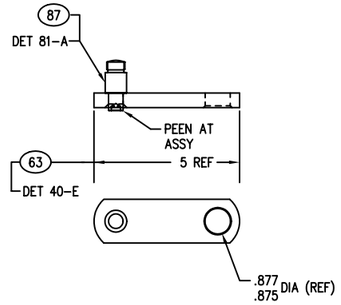

DETAIL 152-E
LEVER-DOG ASSY A-1
SCALE:6=1'-0

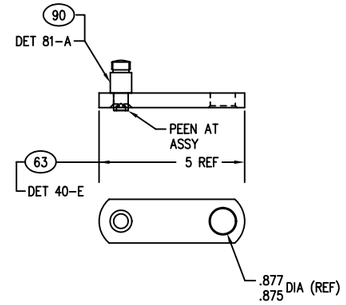

DETAIL 150-E
LEVER-DOG ASSY B-1
SCALE:6=1'-0

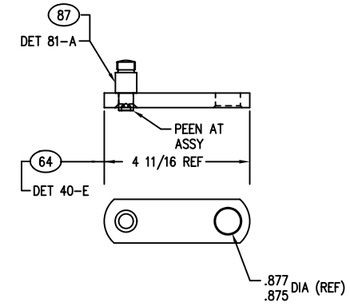

DETAIL 149-E
LEVER-DOG ASSY C-1
SCALE:6=1'-0

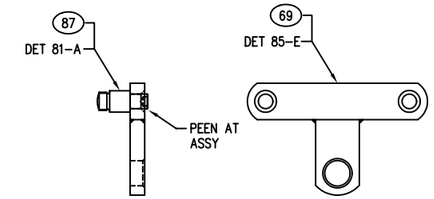

DETAIL 145-E
BELL CRANK-DOG ASSY D-1
SCALE:6=1'-0

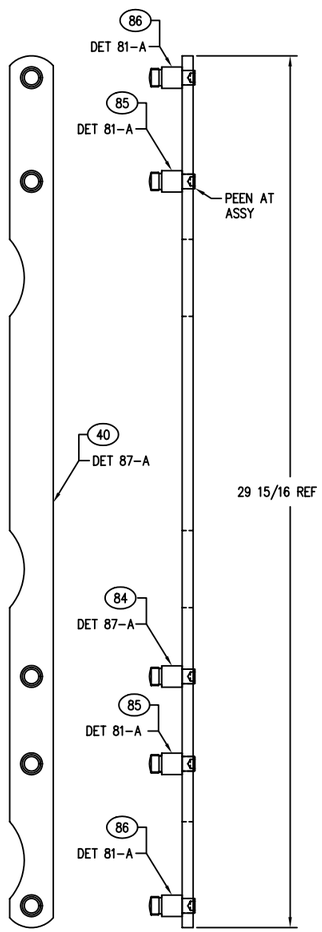

DETAIL 152-A
CONNECTING ROD ASSY
E-1 LH (SHOWN), F-1 RH
HANDLE SIDE
SCALE:6=1'-0

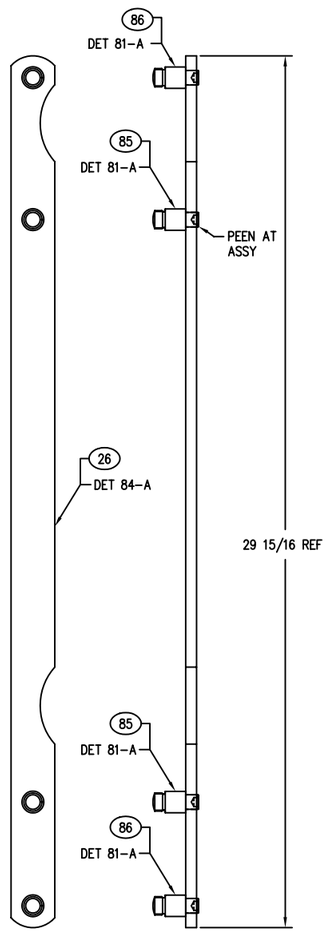

DETAIL 150-A
CONNECTING ROD ASSY
G-1 LH (SHOWN), H-1 RH
HINGE SIDE
SCALE:6=1'-0

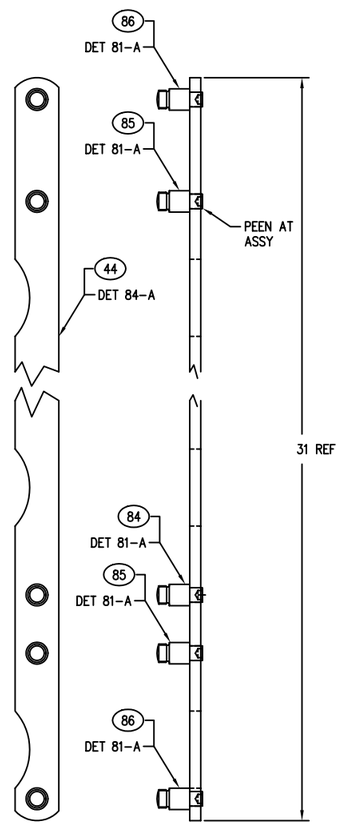

DETAIL 149-A
CONNECTING ROD ASSY
I-1 LH (SHOWN), J-1 RH
HANDLE SIDE
SCALE: 6=1'-0

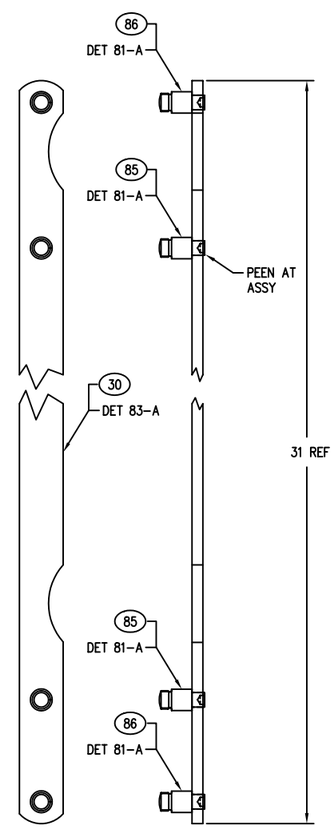

DETAIL 148-A
CONNECTING ROD ASSY
K-1 LH (SHOWN), L-1 RH
HINGE SIDE
SCALE: 6=1'-0

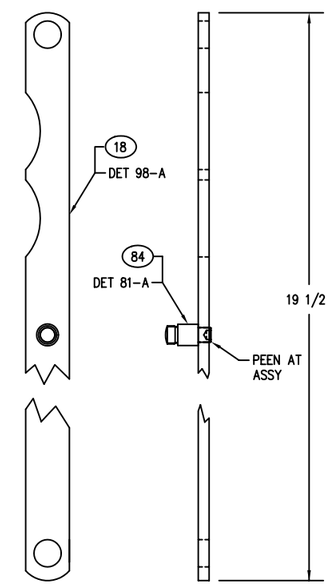

DETAIL 147-A
CONNECTING LINK ASSY
M-1 LH (SHOWN), N-1 RH
HANDLE SIDE
SCALE:6=1'-0

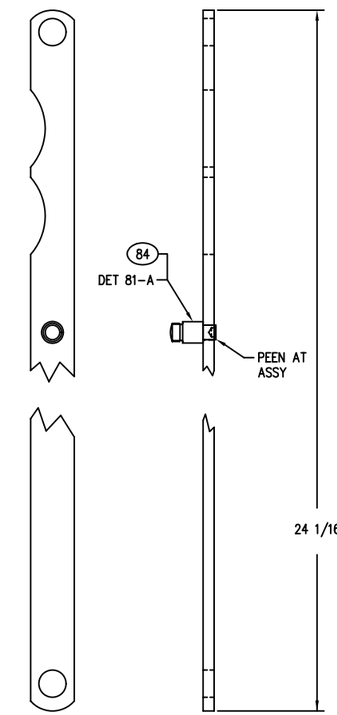

DETAIL 145-A
CONNECTING LINK
O-1 LH (SHOWN), P-1 RH
HANDLE SIDE
SCALE:6=1'-0

DEPARTMENT OF THE NAVY NAVAL SEA SYSTEMS COMMAND WASHINGTON, D.C. 20362-5101	SIZE	CAGE CODE	ESWBS	DRAWING NO.	REV
DRAWN	F	53711	803	6397269	A
ISSUED	SCALE: AS SHOWN	MASS		SHEET 19	

DRAWING 803-6397269 SHEET 19 REV A

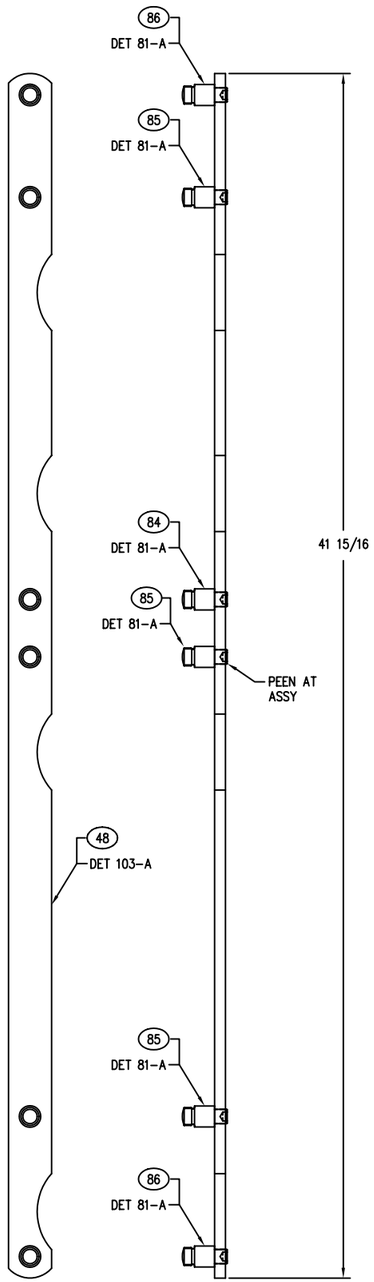

DETAIL 160-A
CONNECTING ROD ASSY
U-1 LH (SHOWN), V-1 RH
HANDLE SIDE
SCALE:6"=1'-0

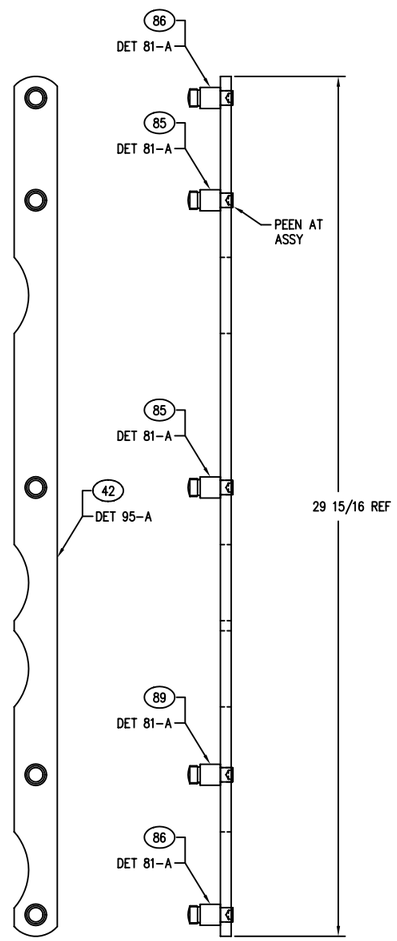

DETAIL 158-A
CONNECTING ROD ASSY
W-1 LH (SHOWN), X-1 RH
HANDLE SIDE
SCALE:6"=1'-0

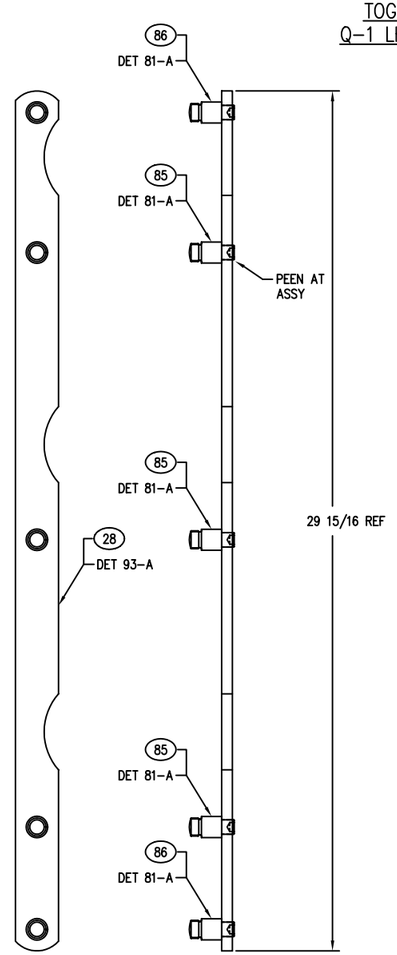

DETAIL 156-A
CONNECTING ROD ASSY
Y-1 LH (SHOWN), Z-1 RH
HINGE SIDE
SCALE:6"=1'-0

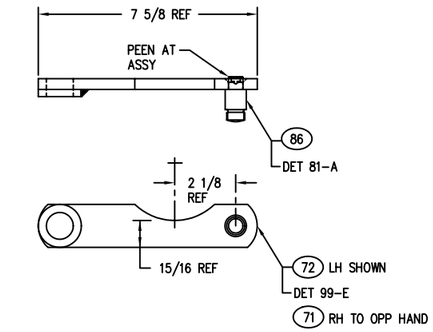

DETAIL 156-E
TOGGLE LINK ASSY
Q-1 LH (SHOWN), R-1 RH
SCALE:6"=1'-0

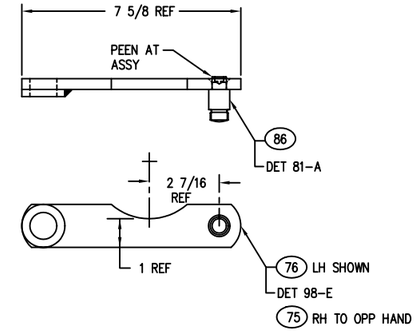

DETAIL 154-E
TOGGLE LINK ASSY
S-1 LH (SHOWN), T-1 RH
SCALE:6"=1'-0

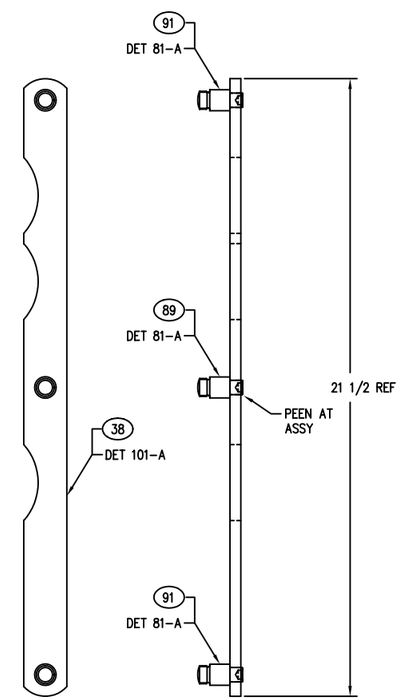

DETAIL 155-A
CONNECTING ROD ASSY
A-2 LH (SHOWN), B-2 RH
HANDLE SIDE
SCALE:6"=1'-0

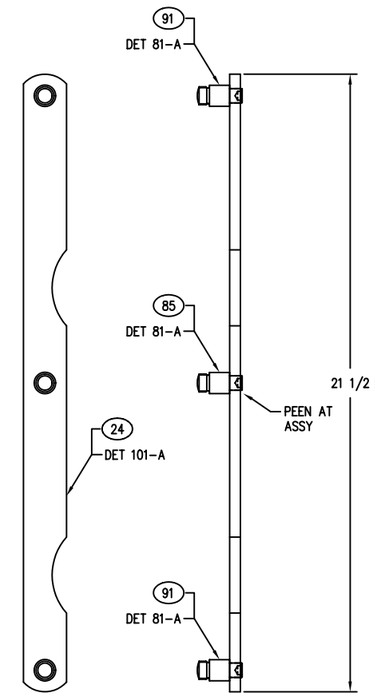

DETAIL 153-A
CONNECTING ROD ASSY
C-2 LH (SHOWN), D-2 RH
HINGE SIDE
SCALE:6"=1'-0

DEPARTMENT OF THE NAVY NAVAL SEA SYSTEMS COMMAND WASHINGTON, D.C. 20362-5101	SIZE	CAGE CODE	ESWBS	DRAWING NO.	REV
DRAWN	F	53711	803	6397269	A
ISSUED	SCALE: AS SHOWN	MASS		SHEET 20	

DRAWING 803-6397269 SHEET 20 REV A

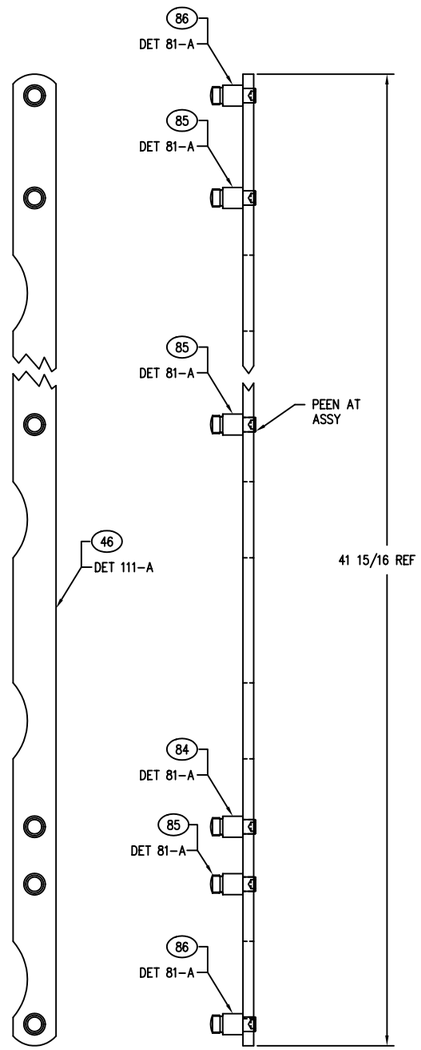

DETAIL 167-A
CONNECTING ROD
HANDLE SIDE
E-2 LH (SHOWN), F-2 RH
SCALE: 6=1'-0

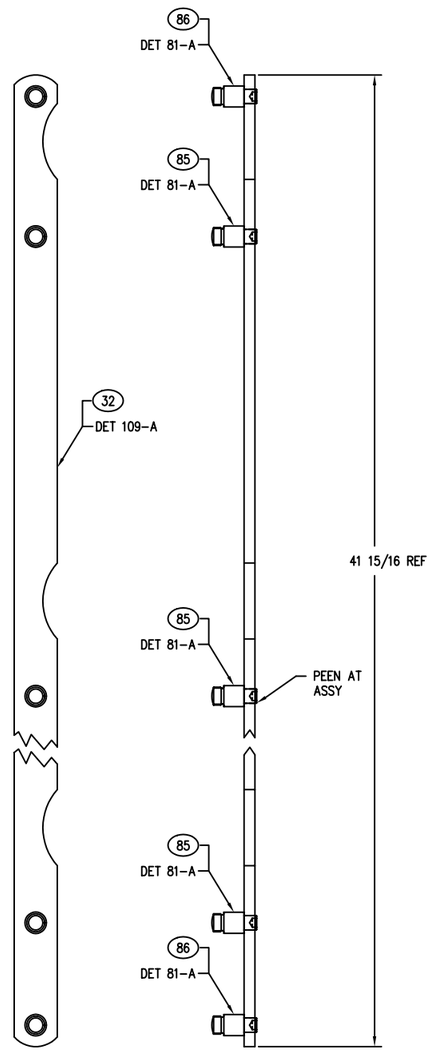

DETAIL 165-A
CONNECTING ROD
HINGE SIDE
G-2 LH (SHOWN), H-2 RH
SCALE: 6=1'-0

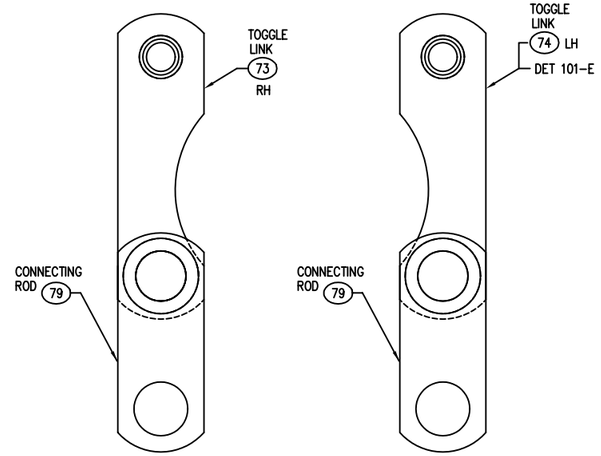

DETAIL 164-D
TOGGLE LINK ASSY
M-2 RH
SCALE: 12=1'-0

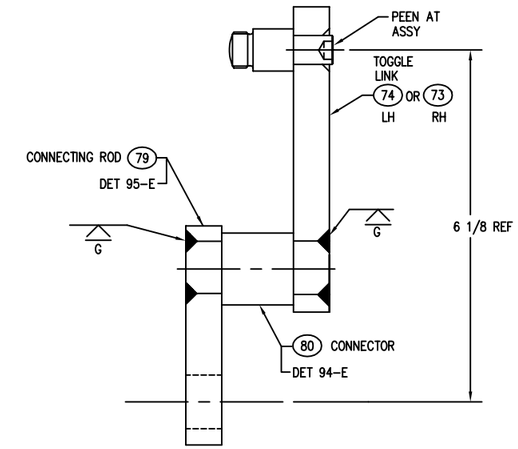

DETAIL 162-D
TOGGLE LINK ASSY
N-2 LH
SCALE: 12=1'-0

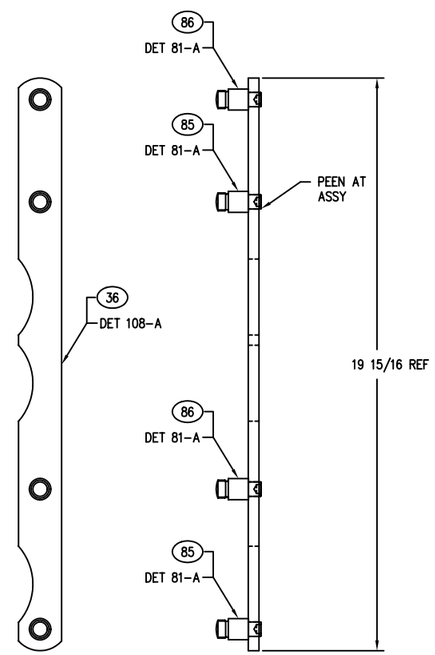

DETAIL 164-A
CONNECTING ROD
HANDLE SIDE
I-2 LH (SHOWN), J-2 RH
SCALE: 6=1'-0

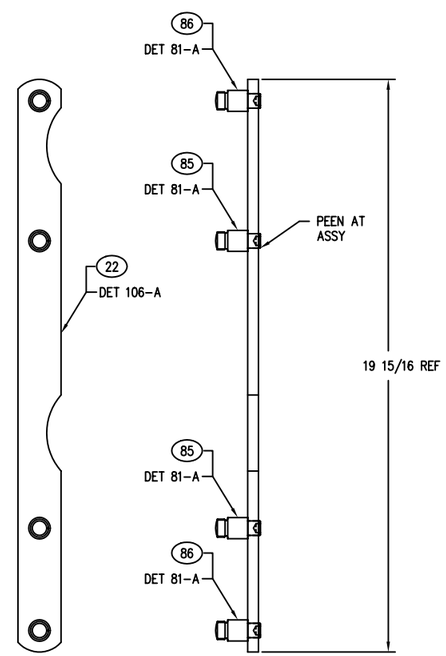

DETAIL 162-A
CONNECTING ROD ASSY
HINGE SIDE
K-2 LH (SHOWN), L-2 RH
SCALE: 6=1'-0

DEPARTMENT OF THE NAVY NAVAL SEA SYSTEMS COMMAND WASHINGTON, D.C. 20362-5101	SIZE	CAGE CODE	ESWBS	DRAWING NO.	REV
DRAWN	F	53711	803	6397269	A
ISSUED	SCALE: AS SHOWN	MASS		SHEET 21	

DRAWING 803-6397269 SHEET 21 REV A