CONTINUED ON SHEET 2

ASSEMBLY NO. QUANTITY PER ASSEMBLY																				PC NO.	NAME	REFNO.	PC NO.	ZONE DET ON	MATERIAL	IDENTIFYING NO. OR SPECIFICATION	ZONE	REMARKS
																				46	CONNECTING LINK ~~RH~~ HANDLE SIDE	1	20	106-A	SST	ASTM-A276 TYPE 316, COND A	55-B	CF, ZINC PLATED NOTE 38 REF 2
																				~~45~~	~~CONNECTING LINK LH HANDLE SIDE~~	~~1~~	~~19~~	~~106-A~~	~~STL~~	~~ASTM-A 108, CR 1018~~	~~38-B~~	~~CF, ZINC PLATED NOTE 38 REF 2~~
																				44	CONNECTING LINK ~~RH~~ HANDLE SIDE	1	18	106-A	SST	ASTM-A276 TYPE 316, COND A	38-B	~~CF, ZINC PLATED NOTE 38 REF 2~~
																1				43	CONNECTING LINK HINGE SIDE	1	17	91-A	SST	ASTM-A276 TYPE 316, COND A	53-C	~~CF, ZINC PLATED NOTE 38 REF 2~~
																	1	1		42	CONNECTING LINK HINGE SIDE	1	16	91-A	SST	ASTM-A276 TYPE 316, COND A	37-C	~~CF, ZINC PLATED NOTE 38 REF 2~~
																1				41	CONNECTING LINK HINGE SIDE	1	15	90-A	SST	ASTM-A276 TYPE 316, COND A	53-D	~~CF, ZINC PLATED NOTE 38 REF 2~~
																	1	1		40	CONNECTING LINK HINGE SIDE	1	14	90-A	SST	ASTM-A276 TYPE 316, COND A	~~37-D~~	~~CF, ZINC PLATED NOTE 38 REF 2~~
																1				39	CONNECTING LINK HANDLE SIDE	1	13	90-A	SST	ASTM-A276 TYPE 316, COND A	55-D	~~CF, ZINC PLATED NOTE 38 REF 2~~
																	1	1		38	CONNECTING LINK HANDLE SIDE	1	12	90-A	SST	ASTM-A276 TYPE 316, COND A	38-D	~~CF, ZINC PLATED NOTE 38 REF 2~~
1	1	1	1	1	1	1	1	1	1	1	1	1	1	1	1	1	1	1	1	37	~~37B GRAB HANDLE-INSIDE~~	~~1~~	~~11~~	~~79-A~~	~~STL~~	~~ASTM A 36~~	~~38-D~~	~~FOR INTERIOR DOORS NOTE 2~~
																					37A GRAB HANDLE-INSIDE	1	10	79-A	SST	ASTM-A276 TYPE 316, COND A	38-D	~~FOR EXTERIOR DOORS NOTE 2~~
1	1	1	1	1	1	1	1	1	1	1	1	1	1	1	1	1	1	1	1	36	~~36B GRAB HANDLE-OUTSIDE~~	~~1~~	~~9~~	~~77-A~~	~~STL~~	~~ASTM A 36~~	~~33-C~~	~~FOR INTERIOR DOORS NOTE 2~~
																					36A GRAB HANDLE-OUTSIDE	1	8	78-A	SST	ASTM-A276 TYPE 316, COND A	33-C	~~FOR EXTERIOR DOORS NOTE 2~~
~~4~~	~~4~~	~~4~~	~~4~~	~~4~~	~~4~~	~~4~~	~~4~~	~~4~~	~~4~~	~~4~~	~~4~~	~~4~~	~~4~~	~~4~~	~~4~~	~~4~~	~~4~~	~~4~~	~~4~~	~~35~~	~~LABEL PLATE SCREW~~	~~–~~	~~–~~	~~–~~	~~CRES~~	~~FF-S-92 TYPE I, STYLE 15~~	~~34-D~~	~~NO. 6 - 32UNC-2A RDH MSCR, LG = 1/8~~
																				~~34~~	~~LABEL PLATE BACKING~~	~~1~~	~~7~~	~~71-A~~	~~SST~~	~~ASTM A 240 TYPE 316, COND A~~	~~106-F~~	
~~1~~	~~1~~	~~1~~	~~1~~	~~1~~	~~1~~	~~1~~	~~1~~	~~1~~	~~1~~	~~1~~	~~1~~	~~1~~	~~1~~	~~1~~	~~1~~	~~1~~	~~1~~	~~1~~	~~1~~	~~33~~	~~LABEL PLATE BACKING~~	~~1~~	~~6~~	~~71-A~~	~~STL~~	~~ASTM A 569~~	~~34-D~~	~~HR, CQ~~
1	1	1	1	1	1	1	1	1	1	1	1	1	1	1	1	1	1	1	1	32	32B LABEL PLATE	1	5	71-B	AL ALY	MIL-P-15024 TYPE H	34-D	NOTE 15 REF 2 NOTE 2
																					~~32A LABEL PLATE~~	~~1~~	~~4~~	~~71-A~~	~~CRES~~	~~MIL-P-15024 TYPE A OR B~~	~~34-D~~	~~NOTE 15 REF 2 NOTE 2~~
																					~~31C GASKET~~	~~1~~	~~3~~	~~87-E~~	~~RUBBRER CLOTH COV~~	~~MIL-G-17927~~	~~34-F 37-B~~	~~FIRE ZONE BOUNDARIES NOTE 10 REF 2, NOTE 2~~
1	1	1	1	1	1	1	1	1	1	1	1	1	1	1	1	1	1	1	1	31	31B GASKET	1	2	86-F	SILICONE RUBBER	ZZ-R-765 CLASS 3B, GRADE 30	34-F 37-B	ALL APPLICATIONS NOTE 9
																					~~31A GASKET~~	~~1~~	~~1~~	~~86-F~~	~~RUBBER~~	~~MIL-R-900~~	~~34-F 37-B~~	~~GENERAL APPLICATION NOTE 10 REF 2, NOTE 2~~
								1												30	BHD FRAME	–	–	–	SST	ASTM-A240 TYPE 316, COND A	33-F 159-A	
								AR												29	GASKET RETAINER (ALTERNATE)	–	–	–	SST	ASTM-A276 TYPE 316, COND A	36-E 38-F	
								AR												28	PANEL FRAME (ALTERNATE)	–	–	–	SST	ASTM-A276 TYPE 316, COND A	38-E 159-F	
								5												27	PANEL STIFFENER (THREE ALTERNATES)	–	–	–	SST	ASTM-A276 TYPE 316, COND A	42-E 110-F	
								1												26	RIM STIFFENER (THREE ALTERNATES)	–	–	–	SST	ASTM-A276 TYPE 316, COND A	34-E 108-C	
								1												25	PANEL (TWO ALTERNATES)	–	–	–	SST	ASTM-A240 TYPE 316, COND A	107-A 153-D	.075 THICK
1	1	1	1	1	1	1		1	1	1	1	1	1	1	1	1	1	1		24	FRAME KNIFE EDGE (TWO ALTERNATES)	–	–	–	SST	ASTM-A276 TYPE 316, COND A	33-F 159-A	
1	1	1	1	1	1	1		1	1	1	1	1	1	1	1	1	1	1		23	BHD FRAME	–	–	–	STL	ASTM-A36	33-F 159-A	LG = TO SUIT
AR	AR	AR	AR	AR	AR	AR		AR	AR	AR	AR	AR	AR	AR	AR	AR	AR	AR		22	GASKET RETAINER (ALTERNATE)	–	–	–	STL	ASTM-A36	37-E 38-F	LG = TO SUIT
AR	AR	AR	AR	AR	AR	AR		AR	AR	AR	AR	AR	AR	AR	AR	AR	AR	AR		21	PANEL FRAME (ALTERNATE)	–	–	–	STL	ASTM-A36	38-E 159-F	LG = TO SUIT
6	6																			20	PANEL STIFFENER (TWO ALTERNATES)	–	–	–	STL	ASTM-A36	42-E 142-F	LG = TO SUIT
		6	6		6	6			5		6	4	6	4						19	PANEL STIFFENER (THREE ALTERNATES)	–	–	–	STL	ASTM-A36	42-E 62-E	LG = TO SUIT
				5				5		5					3	5	3			18	PANEL STIFFENER (THREE ALTERNATES)	–	–	–	STL	ASTM-A36	38-C 42-E	LG = TO SUIT
1	1	1	1	1	1	1		1	1	1	1	1	1	1	1	1	1	1		17	RIM STIFFENER (THREE ALTERNATES)	–	–	–	STL	ASTM-A36	34-B 34-E	LG = TO SUIT
1																				16	PANEL (TWO ALTERNATES)	–	–	–	STL	ASTM-A1011 CS TYPE B	140-A 156-A	HR, CQ, .120 THK
	1																			15	PANEL (TWO ALTERNATES)	–	–	–	STL	ASTM-A1011 CS TYPE B	140-B 157-A	HR, CQ, .075 THK
		1																		14	PANEL (TWO ALTERNATES)	–	–	–	STL	ASTM-A1011 CS TYPE B	132-A 154-A	HR, CQ, .075 THK
			1																	13	PANEL (TWO ALTERNATES)	–	–	–	STL	ASTM-A1011 CS TYPE B	132-B 155-A	HR, CQ, .120 THK
				1																12	PANEL (TWO ALTERNATES)	–	–	–	STL	ASTM-A1011 CS TYPE B	122-B 157-D	HR, CQ, .075 THK
					1															11	PANEL (TWO ALTERNATES)	–	–	–	STL	ASTM-A1011 CS TYPE B	115-A 155-D	HR, CQ, .075 THK
						1														10	PANEL (TWO ALTERNATES)	–	–	–	STL	ASTM-A1011 CS TYPE B	115-B 155-D	HR, CQ, .120 THK
								1												9	PANEL (TWO ALTERNATES)	–	–	–	STL	ASTM-A1011 CS TYPE B	107-B 153-D	HR, CQ, .075 THK
									1	1										8	PANEL (TWO ALTERNATES)	–	–	–	STL	ASTM-A1011 CS TYPE B	90-C 90-E	HR, CQ, .075 THK
											1									7	PANEL (TWO ALTERNATES)	–	–	–	STL	ASTM-A1011 CS TYPE B	82-B 149-A	HR, CQ, .120 THK
												1								6	PANEL (TWO ALTERNATES)	–	–	–	STL	ASTM-A1011 CS TYPE B	74-E 147-A	HR, CQ, .090 THK
													1							5	PANEL (TWO ALTERNATES)	–	–	–	STL	ASTM-A1011 CS TYPE B	66-D 151-D	HR, CQ, .120 THK
														1						4	PANEL (TWO ALTERNATES)	–	–	–	STL	ASTM-A1011 CS TYPE B	58-D 149-D	HR, CQ, .090 THK
															1					3	PANEL (TWO ALTERNATES)	–	–	–	STL	ASTM-A1011 CS TYPE B	50-D 147-D	HR, CQ, .075 THK
																	1			2	PANEL (TWO ALTERNATES)	–	–	–	STL	ASTM-A1011 CS TYPE B	42-D 145-D	HR, CQ, .120 THK
																			1	1	PANEL (TWO ALTERNATES)	–	–	–	STL	ASTM-A1011 CS TYPE B	33-D 145-A	HR, CQ, .075 THK
35 36	33 34	31 32	29 30	27 28	25 26	23 24	21 22	19 20	17 18	15 16	13 14	11 12	9 10	7 8	5 6	3 4	1 2											

PARTS LIST

DOOR ASSY ASSY NO.	SIZE	HAND	MAX PRESS	NO. OF DOGS	PANEL THK	ASSY DET	WEIGHT APPROX
1	18X36	L	15	6	.075	34-A	145 LB
2	18X36	R	15	6	.075	34-A	145 LB
3	18X36	L	30	6	.120	42-A	160 LB
4	18X36	R	30	6	.120	42-A	160 LB
5	26X45	L	10	8	.075	51-A	184 LB
6	26X45	R	10	6	.075	51-A	184 LB
7	26X45	L	20	8	.090	59-A	208 LB
8	26X45	R	20	8	.090	59-A	208 LB
9	26X45	L	30	10	.120	67-A	206 LB
10	26X45	R	30	10	.120	67-A	206 LB
11	26X54	L	15	8	.090	75-A	255 LB
12	26X54	R	15	8	.090	75-A	255 LB
13	26X54	L	30	10	.120	83-A	295 LB
14	26X54	R	30	10	.120	83-A	295 LB
15	26X57	L	5	8	.075	91-A	264 LB
16	26X57	R	5	8	.075	91-A	264 LB
17	26X57	L	12.5	10	.075	99-A	282 LB
18	26X57	R	12.5	10	.075	99-A	282 LB
19	26X66	L	10	8	.075	107-A	287 LB
20	26X66	R	10	8	.075	107-A	287 LB
21	26X66	L	10	8	.075	107-A	290 LB
22	26X66	R	10	8	.075	107-A	290 LB
23	26X66	L	5/13	10	.120	118-A	309 LB
24	26X66	R	5/13	10	.120	118-A	309 LB
25	26X66	L	15	10	.075	115-A	326 LB
26	26X66	R	15	10	.075	115-A	326 LB
27	30X66	L	5	8	.075	123-A	301 LB
28	30X66	R	5	8	.075	123-A	301 LB
29	30X66	L	5/13	10	.120	131-A	325 LB
30	30X66	R	5/13	10	.120	131-A	325 LB
31	30X66	L	15	10	.075	131-A	345 LB
32	30X66	R	15	10	.075	131-A	345 LB
33	36X66	L	5	10	.075	139-A	360 LB
34	36X66	R	5	10	.075	139-A	350 LB
35	36X66	L	5/13	10	.120	139-A	370 LB
36	36X66	R	5/13	10	.120	139-A	370 LB

SEE SHEET 21 FOR ASSY TABLES △A

REVISIONS

ZONE	REV	DESCRIPTION	DATE	APPROVED
1-B	A	DRAWING COMPLETELY REDRAWN.		
		ADDED NOTE "FOR NEW CONSTRUCTION AND DOOR REPLACEMENT ONLY".		
1-D		ADDED ASSY 29 AND 30 TO GENL NOTE 4.		
2-C 15-F		MODIFIED GENL NOTES 7 AND 8, ADDED GENL NOTES 9 AND 10.		
2-D		DELETED NOTES 2.D, 2.E, 2.F. CHANGED GENL NOTE 2G FROM GASKET TO INTERIOR OR EXTERIOR.		
2-D		DELETED DOOR ASSY TABLE. RELOCATED ASSY TABLES TO SHEET 21, ADDED NOTE "SEE SHEET 21 FOR ASSY TABLES.".		

(CONTINUED ON SHEET 2)

CAD MAINTAINED, CHANGES SHALL BE INCORPORATED BY THE DESIGN ACTIVITY.

GENERAL NOTES:

1. SEE NOTES 1, 3–6, 8–10, 13–15, 20, 22, 36, 38–42, 47, 51, 54, 57–60 & 63 ON REF 2 FOR ADDITIONAL APPLICABLE NOTES.
2. ORDERING DATA:
   WHEN THIS DRAWING IS ISSUED FOR MANUFACTURE, THE FOLLOWING MUST BE SPECIFIED WHEN APPLICABLE:
   A. DRAWING TITLE, NUMBER, REVISION LETTER & ASSEMBLY NO.
   B. WITH OR WITHOUT FIXED LIGHT
   C. HINGE ASSY
   ~~D. HASP ASSY~~
   ~~E. GRAB HANDLE~~
   ~~F. LABEL PLATE~~
   △A G. INTERIOR OR EXTERIOR
   H. CORROSION CONTROL SURFACE FINISH. (FOR EXTERIOR OR INTERIOR INSTALLATION, SEE NOTE 47 REF 2).
3. THE DOORS ON THIS DRAWING ARE DESIGNED TO THE FOLLOWING REQUIREMENTS:
   A. GRADE A SHOCK (CLOSED & DOGGED)
   B. MAXIMUM PRESSURE; SEE TABLE OF DOOR ASSEMBLIES AND NOTE 41 ON REF 2.
4. DOOR ASSEMBLIES 23, 24, 29, 30, 35 & 36 ARE △A DESIGNED FOR 5 PSI MAXIMUM INTERNAL PRESSURE & 13 PSI MAXIMUM EXTERNAL PRESSURE. SEE NOTE 60 ON REF 2.
5. DOORS ON THIS DRAWING ARE DESIGNED FOR INTERIOR AND EXTERIOR USE. SEE NOTE 47 ON REF 2.
6. DOORS FABRICATED IN ACCORDANCE WITH THIS DRAWING ARE GRADE A SHOCK APPROVED BASED ON TESTS OF DOOR ASSEMBLIES 5, 11 & 23 CONDUCTED BY THE WEST COAST SHOCK FACILITY, HUNTERS POINT NAVAL SHIPYARD, SAN FRANCISCO, CALIFORNIA AS REPORTED BY HUNTERS POINT NAVAL SHIPYARD TECHNICAL REPORT NO. 10–70 "SHOCK TEST OF SHIPBOARD CLOSURES FSP ITEM NO. 196" OF MAY 1971.
7. △A THIS DRAWING CONTAINS REDESIGNED HINGE ASSEMBLIES FOR NEW CONSTRUCTION DOORS AS WELL AS RETAINING THE EXISTING IN–SERVICE HINGE ASSEMBLIES. HINGE ASSEMBLIES M, N, O, P, Q AND R, ARE PROVIDED FOR REPAIR AND REPLACEMENT OF THE IN–SERVICE HINGE ASSEMBLIES, WHERE AS NEW DOORS FABRICATED IN ACCORDANCE WITH THIS DRAWING SHALL USE HINGE ASSEMBLIES DD THROUGH II AS SPECIFIED ON THE CONTRACT OR PURCHASE ORDER.

(CONTINUED ON SHEET 2)

NO.	TITLE	CAGE CODE	DWG NO.
2	DOORS, HATCHES & SCUTTLES GENERAL NOTES	80064	803–2226372
1	DOORS, WATERTIGHT, QUICK ACTING SUB–ASSEMBLIES & DETAILS	53711	803–6397269

REFERENCES

DISTRIBUTION: APPROVED FOR PUBLIC RELEASE; DISTRIBUTION IS UNLIMITED.

SUPERSEDES DWG NO. 805–1340187, 1400050, 1400056 THRU 1400065 INCL, 1626433 & 1626510

FOR NEW CONSTRUCTION AND DOOR REPLACEMENT ONLY △A

20	19	18	17	16	15	14	13	12	11	10	9	8	7	6	5	4	3	2	1	SH
A	–	A	A	A	A	A	A	A	A	A	A	A	A	A	A	A	A	A	A	REV

23	22	21	SH
A	A	A	REV
A	3	2	1

REVISION STATUS OF SHEETS

ABBREVIATIONS

AL	ALUMINUM
ALY	ALLOY
AR	AS REQUIRED
CQ	COMMERCIAL QUALITY
CRES	CORROSION RESISTANT STEEL
HR	HOT ROLLED
MSCR	MACHINE SCREW
RDH	ROUNDHEAD
SST	STAINLESS STEEL
STL	STEEL

DIMENSIONAL TOLERANCES UNLESS OTHERWISE SPECIFIED

MACHINED DIM	DEC	FRAC	GEOMETRIC (WHERE IND) SYM	GEOMETRY	TOL
UNDER 6	±0.010	±1/64		FLAT & STR	AS NOTED
6 TO 24	±0.020	±1/32	⊥	PERPENDICULAR	AS NOTED
OVER 24	±0.030	±1/16	//	PARALLELISM	AS NOTED
DIM ARE IN INCHES			◎	CONCENTRICITY	AS NOTED
FILLETS & RADII TO BE ± 1/32			SYM IN ACCORDANCE WITH ANSI Y14.5		
TOL ON ANGLES ± 0^30'					

	SIGNATURE	DATE
PREPARED	J.T.BAILEY	2/26/88
CHECKED	P.R. HEMLER	3/30/88
HD ENGR	J. LOOSMAN	4/06/88
NAVY APPROVAL		
PROJ ENGR	T. COSTANTINO	4/8/88
BR. HD	J. TURNER	4/8/88
DIV. DIR	M. PETZ	4/13/88
SUBGRP DIR	D.O. NEUMAN	4/14/88
APPD FOR COMNAVSEA	D.O. NEUMAN	4/14/88

DEPARTMENT OF THE NAVY — WASHINGTON, D.C. 20362–5101

NAVAL SEA SYSTEMS COMMAND

STANDARD DRAWING

DOORS WATERTIGHT, QUICK ACTING ARRANGEMENT

SIZE	CAGE CODE	ESWBS	DRAWING NO.	REV
F	53711	803	6397268	A

SCALE: NONE — MASS — SHEET 1 OF 23

DRAWING 803–6397268 SHEET 1 REV A

CONTINUED ON SHEET 3

GENERAL NOTES: (CONTINUED FROM SHEET 1) A

8. DOOR RIM & BHD FRAME KNIFE EDGE SHALL BE IN A PLANE PARALLEL TO EACH OTHER WITHIN A 1/16 INCH MAXIMUM FLATNESS TOLERANCE ZONE WHEN IN A FREE STATE. SEE SECTION 34-E.

9. HINGES SHALL BE ALIGNED TO PREVENT BINDING AND TO INSURE FREE SEATING OF GASKET ON KNIFE EDGE.

10. LABEL PLATES SHALL BE SECURED TO THE INSIDE SURFACE (STIFFINER SIDE) OF THE DOOR PANEL USING 3M VHB DOUBLE COATED ACRYLIC FOAM TAPE, PRODUCT 4949 OR 4950. TAPE SHALL COVER THE FULL SURFACE OF THE LABEL PLATE.

11. HINGE TYPES;
    LOW; USE, UNLESS OTHER WISE SPECIFIED.

    LOW MOD; USE, ONLY ON 36" WIDE 2 HANDLE DOORS.

    HIGH; USE, ONLY WHERE DOOR MUST SWING 180°.

PC NO.	NAME	REFNO.	PC NO.	ZONE DET ON	MATERIAL	IDENTIFYING NO. OR SPECIFICATION	ZONE	REMARKS
97	TOGGLE LINK RH	1	71	99-E	SST	ASTM-A276 TYPE 316, COND A	39-B	CF, ZINC PLATED NOTE 38 REF 2
96	BELL CRANK DOG	1	70	84-E	SST	ASTM-A276 TYPE 316, COND A	110-F 112-E	
95	BELL CRANK DOG	1	69	84-E	SST	ASTM-A276 TYPE 316, COND A	37-D 38-D	CF, ZINC PLATED NOTE 38 REF 2
94	LEVER DOG	1	68	39-D	SST	ASTM-A276 TYPE 316, COND A	110-C 110-D	
93	LEVER DOG	1	67	39-E	SST	ASTM-A276 TYPE 316, COND A	111-A	
92	LEVER DOG	1	66	39-E	SST	ASTM-A276 TYPE 316, COND A	110-A	
91	LEVER DOG	1	65	40-D	SST	ASTM-A276 TYPE 316, COND A	61-C 63-C	CF, ZINC PLATED NOTE 38 REF 2
90	LEVER DOG	1	64	39-E	SST	ASTM-A276 TYPE 316, COND A	38-B	CF, ZINC PLATED NOTE 38 REF 2
89	LEVER DOG	1	63	39-E	SST	ASTM-A276 TYPE 316, COND A	37-B 38-C	CF, ZINC PLATED NOTE 38 REF 2
88	CONNECTING ROD TOP	1	62	89-E	SST	ASTM-A276 TYPE 316, COND A	111-F	
87	CONNECTING ROD TOP	1	61	89-E	SST	ASTM-A276 TYPE 316, COND A	55-E	CF, ZINC PLATED NOTE 38 REF 2
86	CONNECTING ROD TOP	1	60	89-E	SST	ASTM-A276 TYPE 316, COND A	127-F	CF, ZINC PLATED NOTE 38 REF 2
85	CONNECTING ROD TOP	1	59	89-E	SST	ASTM-A276 TYPE 316, COND A	38-D	CF, ZINC PLATED NOTE 38 REF 2
84	CONNECTING ROD CORNER	1	58	92-E	SST	ASTM-A276 TYPE 316, COND A	69-B	CF, ZINC PLATED NOTE 38 REF 2
83	CONNECTING ROD CORNER	1	57	92-E	SST	ASTM-A276 TYPE 316, COND A	69-D	CF, ZINC PLATED NOTE 38 REF 2
82	CONNECTING ROD CORNER	1	56	106-D	SST	ASTM-A276 TYPE 316, COND A	110-B 110-E	
81	CONNECTING ROD CORNER	1	55	107-D	SST	ASTM-A276 TYPE 316, COND A	110-B 110-E	CF, ZINC PLATED NOTE 38 REF 2
80	CONNECTING ROD CORNER	1	54	107-D	SST	ASTM-A276 TYPE 316, COND A	93-B 93-E	CF, ZINC PLATED NOTE 38 REF 2
79	CONNECTING ROD CORNER	1	53	107-D	SST	ASTM-A276 TYPE 316, COND A	61-B 63-B	CF, ZINC PLATED NOTE 38 REF 2
78	CONNECTING ROD CORNER	1	52	107-D	SST	ASTM-A276 TYPE 316, COND A	77-B 77-E	CF, ZINC PLATED NOTE 38 REF 2
77	CONNECTING ROD LH HANDLE SIDE	1	51	82-A	SST	ASTM-A276 TYPE 316, COND A	112-D	
76	CONNECTING ROD RH HANDLE SIDE	1	50	82-A	SST	ASTM-A276 TYPE 316, COND A	112-D	
75	CONNECTING ROD LH HANDLE SIDE	1	49	103-A	STL	ASTM A 108, GR 1018	141-D	CF, ZINC PLATED NOTE 38 REF 2
74	CONNECTING ROD RH HANDLE SIDE	1	48	103-A	SST	ASTM-A276 TYPE 316, COND A	141-D	CF, ZINC PLATED NOTE 38 REF 2
73	CONNECTING ROD LH HANDLE SIDE	1	47	111-A	STL	ASTM A 108, GR 1018	120-D 136-D	CF, ZINC PLATED NOTE 38 REF 2
72	CONNECTING ROD RH HANDLE SIDE	1	46	111-A	SST	ASTM-A276 TYPE 316, COND A	120-D 136-D	CF, ZINC PLATED NOTE 38 REF 2
71	CONNECTING ROD LH HANDLE SIDE	1	45	82-A	STL	ASTM A 108, GR 1018	112-D	CF, ZINC PLATED NOTE 38 REF 2
70	CONNECTING ROD RH HANDLE SIDE	1	44	82-A	SST	ASTM-A276 TYPE 316, COND A	112-D	CF, ZINC PLATED NOTE 38 REF 2
69	CONNECTING ROD LH HANDLE SIDE	1	43	95-A	STL	ASTM A 108, GR 1018	88-D	CF, ZINC PLATED NOTE 38 REF 2
68	CONNECTING ROD RH HANDLE SIDE	1	42	95-A	SST	ASTM-A276 TYPE 316, COND A	88-D	CF, ZINC PLATED NOTE 38 REF 2
67	CONNECTING ROD LH HANDLE SIDE	1	41	87-A	STL	ASTM A 108, GR 1018	79-D	CF, ZINC PLATED NOTE 38 REF 2
66	CONNECTING ROD RH HANDLE SIDE	1	40	87-A	SST	ASTM-A276 TYPE 316, COND A	79-D	CF, ZINC PLATED NOTE 38 REF 2
65	CONNECTING ROD LH HANDLE SIDE	1	39	99-A	STL	ASTM A 108, GR 1018	71-C	CF, ZINC PLATED NOTE 38 REF 2
64	CONNECTING ROD RH HANDLE SIDE	1	38	99-A	SST	ASTM-A276 TYPE 316, COND A	71-C	CF, ZINC PLATED NOTE 38 REF 2
63	CONNECTING ROD LH HANDLE SIDE	1	37	108-A	STL	ASTM A 108, GR 1018	64-B	CF, ZINC PLATED NOTE 38 REF 2
62	CONNECTING ROD RH HANDLE SIDE	1	36	108-A	SST	ASTM-A276 TYPE 316, COND A	64-B	CF, ZINC PLATED NOTE 38 REF 2
61	CONNECTING ROD LH HINGE SIDE	1	35	84-A	SST	ASTM-A276 TYPE 316, COND A	109-D	
60	CONNECTING ROD RH HINGE SIDE	1	34	84-A	SST	ASTM-A276 TYPE 316, COND A	109-D	
59	CONNECTING ROD LH HINGE SIDE	1	33	109-A	STL	ASTM A 108, GR 1018	117-D	CF, ZINC PLATED NOTE 38 REF 2
58	CONNECTING ROD RH HINGE SIDE	1	32	109-A	SST	ASTM-A276 TYPE 316, COND A	117-D	CF, ZINC PLATED NOTE 38 REF 2
57	CONNECTING ROD LH HINGE SIDE	1	31	84-A	STL	ASTM A 108, GR 1018	109-D	CF, ZINC PLATED NOTE 38 REF 2
56	CONNECTING ROD RH HINGE SIDE	1	30	84-A	SST	ASTM-A276 TYPE 316, COND A	109-D	CF, ZINC PLATED NOTE 38 REF 2
55	CONNECTING ROD LH HINGE SIDE	1	29	93-A	STL	ASTM A 108, GR 1018	85-D	CF, ZINC PLATED NOTE 38 REF 2
54	CONNECTING ROD RH HINGE SIDE	1	28	93-A	SST	ASTM-A276 TYPE 316, COND A	85-D	CF, ZINC PLATED NOTE 38 REF 2
53	CONNECTING ROD LH HINGE SIDE	1	27	86-A	STL	ASTM A 108, GR 1018	77-D	CF, ZINC PLATED NOTE 38 REF 2
52	CONNECTING ROD RH HINGE SIDE	1	26	86-A	SST	ASTM-A276 TYPE 316, COND A	77-D	CF, ZINC PLATED NOTE 38 REF 2
51	CONNECTING ROD LH HINGE SIDE	1	25	98-A	STL	ASTM A 108, GR 1018	69-D	CF, ZINC PLATED NOTE 38 REF 2
50	CONNECTING ROD RH HINGE SIDE	1	24	98-A	SST	ASTM-A276 TYPE 316, COND A	69-D	CF, ZINC PLATED NOTE 38 REF 2
49	CONNECTING ROD LH HINGE SIDE	1	23	101-A	STL	ASTM A 108, GR 1018	61-D	CF, ZINC PLATED NOTE 38 REF 2
48	CONNECTING ROD RH HINGE SIDE	1	22	101-A	SST	ASTM-A276 TYPE 316, COND A	61-D	CF, ZINC PLATED NOTE 38 REF 2
47	CONNECTING LINK LH HANDLE SIDE	1	21	106-A	STL	ASTM A 108, GR 1018	55-B	CF, ZINC PLATED NOTE 38 REF 2

ASSEMBLY NO. / QUANTITY PER ASSEMBLY

PARTS LIST A

REVISIONS (CONTINUED FROM SHEET 1)

ZONE	DESCRIPTION	DATE	APPROVED
8-E, 33-D, 37-D, 39-B, 42-D, 45-D, 47-B, 50-E, 58-E, 66-E, 74-E, 82-E, 90-F, 98-F, 106-F, 114-E, 121-E, 129-E, 137-E	DELETED PC NOS 31A, 31C, 32A, 33, 34, 35, 36B, 37B, 40 AND 45. CHANGED SPEC FOR PC NO. 31B TO ZZ-R-765 CLASS 3B, GRADE 30, WAS ZZ-R-765 CLASS 2B, GRADE 40. CHANGED REMARKS FOR PC NO. 31B TO ALL APPLICATIONS NOTE 9, WAS MISSILE BLAST AREAS NOTE 10, REF 2, NOTE 2. DELETED REMARKS FOR PC NOS 36A, 37A, 38, 39 AND 41 THRU 44. CHANGED MATL FOR PC NOS 38 THRU 44 & 46 TO SST, WAS STL. CHANGED SPEC FOR PC NOS 38 THRU 44 AND 46 TO ASTM TYPE 316, COND A, WAS ASTM A108, GR 1018. DELETED RH FROM NAME OF PC NOS 44 AND 46.		
11-A, 55-B, 61-D, 64-B, 69-D, 72-C, 77-D, 80-D, 85-D, 88-D, 93-D, 96-D, 101-D, 104-D, 108-D, 109-A, 109-B, 109-C, 109-D, 109-E, 109-F, 112-A, 112-B, 112-C, 112-D, 112-E, 112-F, 117-D, 120-D, 125-D, 128-D, 133-D, 136-D, 141-D, 144-C	DELETED PC NOS 47, 49, 51, 53, 55, 57, 59 THRU 61, 63, 65, 67, 69, 71, 73, 75 THRU 77, 82, 88, 92 THRU 94 AND 96. DELETED RH FROM THE NAME OF PC NOS 48, 50, 52, 54, 56, 58, 62, 64, 66, 68, 70, 72 AND 74. CHANGED MATL AND SPEC FOR PC NOS 48, 50, 52, 54, 56, 58, 62, 64, 66, 68, 70, 72, 74, 78 THRU 81, 83 THRU 87, 89 THRU 91, 95 AND 97 TO ASTM -A276 TYPE 316, COND A, WAS ASTM A 108, GR 1018. ADDED QTY OF 1 TO ASSY 21/22 FOR PC NOS 56, 70, 87, 89 AND 90. ADDED QTY OF 4 TO ASSY 21/22 OF PC NOS 81 AND 91. ADDED QTY OF 2 TO ASSY 21/22 OF PC NO. 95. DELETED REMARKS FOR PC NOS 48, 50, 52, 54, 56, 58, 62, 64, 66, 68, 70, 72, 74, 78 THRU 81, 83 THRU 87, 89 THRU 91, 95 AND 97.		
23-A, 112-C	CHANGED MATL FOR PC NOS 98 THRU 102, 105 AND 106 TO SST, WAS STL. CHANGED SPEC FOR PC NOS 98 THRU 102, AND 105 AND 106 TO ASTM A276 TYPE 316 COND A, WAS ASTM A108, GR 1018. DELETED REMARKS FOR PC NOS 98 THRU 102, 105 AND 106. DELETED PC NOS 103 AND 104.		
23-F	ADDED QTY OF 2 TO ASSY 21/22 FOR PC NOS 141A. DELETED PC NO. 142.		
28-A	ADDED AR TO ASSY 21/22 FOR PC NO. 151. DELETED PC NOS 143 AND 152.		
33-F, 36-F, 39-F	DELETED 2 INCH WELD AT HINGE AND WEDGES.		
36-B, 36-D, 44-B, 44-D, 52-B, 52-D, 60-B, 60-D, 68-B, 68-D, 76-B, 76-E, 84-B, 84-E, 92-B, 92-E, 100-B, 100-E, 108-B, 109-E, 116-B, 117-E, 124-B, 124-E, 132-B, 132-E, 140-B, 141-E	ADDED PC NOS 156 AND 157 TO DOOR ASSY.		

(CONTINUED ON SHEET 3)

DRAWING 803-6397268 SHEET 2 REV A

DEPARTMENT OF THE NAVY
NAVAL SEA SYSTEMS COMMAND
WASHINGTON, D.C. 20362-5101

DRAWN
ISSUED

SIZE	CAGE CODE	ESMBS	DRAWING NO.	REV
F	53711	803	6397268	A

SCALE: NOTED MASS SHEET 2

CONTINUED ON SHEET 4

ASSEMBLY NO. / QUANTITY PER ASSEMBLY																			PC NO.	NAME	REFNO.	PC NO.	ZONE DET ON	MATERIAL	IDENTIFYING NO. OR SPECIFICATION	ZONE	REMARKS
							2												142	~~HINGE ASSY ASSY AA~~	~~1~~	~~ASSY AA~~	~~DET 58-B~~			~~108-B~~	~~NOTE 2~~
																			142	~~HINGE ASSY ASSY Y~~	~~1~~	~~ASSY Y~~	~~DET 59-C~~		~~–~~	~~108-B~~	~~NOTE 2~~
~~2~~	~~2~~	~~2~~	~~2~~																141	~~HINGE ASSY ASSY X~~	~~1~~	~~ASSY X~~	~~DET 62-A~~		~~–~~	132-B	NOTE 2
				~~2~~	~~2~~	~~2~~	~~2~~	~~2~~	~~2~~	~~2~~	~~2~~	~~2~~	~~2~~	~~2~~	~~2~~	~~2~~	~~2~~	~~2~~	141	~~HINGE ASSY ASSY V~~	~~1~~	~~ASSY V~~	~~DET 58-B~~	–	~~–~~	35-B 132-B	NOTE 2
																			141	~~HINGE ASSY ASSY T~~	~~1~~	~~ASSY T~~	~~DET 59-C~~	–	~~–~~	35-B	NOTE 2
																			140	~~HINGE ASSY ASSY W~~	~~1~~	~~ASSY W~~	~~DET 62-A~~	–	~~–~~	132-B	NOTE 2
~~2~~	~~2~~	~~2~~	~~2~~																140	~~HINGE ASSY ASSY U~~	~~1~~	~~ASSY U~~	~~DET 58-B~~	–	~~–~~	35-B 132-B	NOTE 2
				~~2~~	~~2~~	~~2~~	~~2~~	~~2~~	~~2~~	~~2~~	~~2~~	~~2~~	~~2~~	~~2~~	~~2~~	~~2~~	~~2~~	~~2~~	140	~~HINGE ASSY ASSY S~~	~~1~~	~~ASSY S~~	~~DET 59-C~~	–	~~–~~	35-B	NOTE 2
							~~1~~												139	~~OPR HANDLE ASSY ASSY R~~	~~1~~	~~ASSY R~~	~~DET 43-A~~	–	~~–~~	~~106-B~~	
							~~1~~												138	~~OPR HANDLE ASSY ASSY Q~~	~~1~~	~~ASSY Q~~	~~DET 43-A~~	–	~~–~~	~~106-B~~	
														1					137	OPR HANDLE ASSY ASSY P	1	ASSY P	DET 43-A	–	–	67-B	
														1					136	OPR HANDLE ASSY ASSY O	1	ASSY O	DET 43-A	–	–	67-A	
																1	1	1	135	OPR HANDLE ASSY ASSY N	1	ASSY N	DET 43-A	–	–	35-B	
																1	1	1	134	OPR HANDLE ASSY ASSY M	1	ASSY M	DET 43-A	–	–	35-B	
										1		1			1				133	OPR HANDLE ASSY ASSY L	1	ASSY L	DET 43-A	–	–	59-B	
										1		1			1				132	OPR HANDLE ASSY ASSY K	1	ASSY K	DET 43-A	–	–	59-A	
1	1																		131	OPR HANDLE ASSY ASSY J	1	ASSY J	DET 43-A	–	–	142-A	
1	1																		130	OPR HANDLE ASSY ASSY I	1	ASSY I	DET 43-A	–	–	142-A	
1	1	1	1	1	1	1	1	1		1		1							129	OPR HANDLE ASSY ASSY H	1	ASSY H	DET 43-A	–	–	79-B 143-A	
1	1	1	1	1	1	1	1	1		1		1							128	OPR HANDLE ASSY ASSY G	1	ASSY G	DET 43-A	–	–	79-A 143-A	
							4 4												127	DOG ASSEMBLY ASSY F	1	ASSY F	DET 34-E	–	–	106-A 106-C	
							4 4												126	DOG ASSEMBLY ASSY E	1	ASSY E	DET 34-E	–	–	106-A 106-C	
										1		1		1	1				125	DOG ASSEMBLY ASSY D	1	ASSY D	DET 34-E	–	–	58-C	
										1		1		1	1				124	DOG ASSEMBLY ASSY C	1	ASSY C	DET 34-E	–	–	58-C	
6 4	6 4	6 4	6 4	4 4	4 4	6 4			4 4	5 4	4 4	5 4	4 4	5 4	3 4	2 4	2 4	2 4	123	DOG ASSEMBLY ASSY B	1	ASSY B	DET 34-E	–	–	34-B 34-C	
4 6	4 6	4 6	4 6	4 4	4 4	4 6			4 4	4 5	4 4	4 5	4 4	4 5	4 3	4 2	4 2	4 2	122	DOG ASSEMBLY ASSY A	1	ASSY A	DET 34-E	–	–	34-B	
																1	1	1	121	DOG STOP	1	93	39-C	STL	ASTM-A569	36-C	HR, CQ
18	18	18	18	16	18	18	16	16	17	16	17	16	13	15	10	10	10	120	COLLAR CONNECTING ROD	1	92	83-E	NAVAL BRASS	ASTM-B21 ALY C48200, TEMPER H02	36-C 38-C	
18	18	18	18	16	18	18	16	16	17	16	17	16	13	15	10	10	10	119	COTTER PIN CONNECTING ROD	–	–	–	CRES	MS24665-374	36-C 38-C	1/8 DIA X 1-1/2 LG
18	18	18	18	16	18	18	16	16	18	16	18	16	18	16	12	12	12	118	WASHER CONNECTING ROD	–	–	–	NAVAL BRASS	ASTM-B21 ALY C48200, TEMPER H02	36-C 38-C	1-1/4 OD X 25/32 ID X 1/16 THK (NOM)
													~~4~~						117	~~STUD DOG LEVER/CONNROD~~	~~1~~	~~91~~	~~81-A~~	~~SST~~	~~ASTM-A276 TYPE 316, COND A~~	69-C 72-D	
															~~2~~	~~2~~	~~2~~	~~2~~	116	~~STUD CONNROD/CONNROD~~	~~1~~	~~90~~	~~81-A~~	~~SST~~	~~ASTM-A276 TYPE 316, COND A~~	36-C 39-C	
									~~1~~		~~1~~		~~1~~	~~1~~					115	~~STUD TOGGLE LINK/DOG LEVER~~	~~1~~	~~89~~	~~81-A~~	~~SST~~	~~ASTM-A276 TYPE 316, COND A~~	64-B	
									~~1~~		~~1~~		~~1~~	~~1~~					114	~~STUD OPERATING HANDLE~~	~~1~~	~~88~~	~~81-A~~	~~SST~~	~~ASTM-A276 TYPE 316, COND A~~	64-C	
~~4~~	~~4~~	~~6~~	~~6~~	~~6~~	~~6~~	~~6~~	~~6~~	~~6~~	~~6~~	~~6~~	~~6~~	~~6~~	~~6~~	~~6~~	~~6~~	~~6~~	~~6~~	~~6~~	113	~~STUD CONNECTING ROD~~	~~1~~	~~87~~	~~81-A~~	~~SST~~	~~ASTM-A276 TYPE 316, COND A~~	37-B 37-D	
~~4~~	~~4~~	~~4~~	~~4~~	~~4~~	~~4~~	~~4~~	~~4~~	~~4~~	~~4~~	~~4~~	~~4~~	~~4~~		~~4~~					112	~~STUD CONNECTING ROD~~	~~1~~	~~86~~	~~81-A~~	~~SST~~	~~ASTM-A276 TYPE 316, COND A~~	61-C 64-D	
~~6~~	~~6~~	~~6~~	~~6~~	~~4~~	~~6~~	~~6~~	~~4~~	~~4~~	~~5~~	~~4~~	~~5~~	~~4~~	~~1~~	~~3~~					111	~~STUD DOG LEVER~~	~~1~~	~~85~~	~~81-A~~	~~SST~~	~~ASTM-A276 TYPE 316, COND A~~	61-C 64-C	
~~4~~	~~4~~	~~2~~	~~2~~	~~2~~	~~2~~	~~2~~	~~2~~	~~2~~		~~2~~		~~2~~			~~2~~	~~2~~	~~2~~		110	~~STUD TOGGLE LINK & OPERATING HANDLE~~	~~1~~	~~84~~	~~81-A~~	~~SST~~	~~ASTM-A276 TYPE 316, COND A~~	39-B 39-C	
4	4	2	2	2	2	2	2	2	2	2	2	2	2	2	2	2	2	109	BEARING-TOGGLE LINK & OPR HANDLE	1	83	81-E	316 SST	MIL-B-81934	39-B 39-C	SELF LUBRICATING
6	6	6	6	4	6	6	4	4	6	4	6	4	6	4				108	BEARING DOG LEVER	1	82	81-E	316 SST	MIL-B-81934	61-C 64-C	SELF LUBRICATING
8	8	10	10	10	10	10	10	10	10	10	10	10	10	10	10	10	10	107	BEARING CONNECTING ROD	1	81	81-E	316 SST	MIL-B-81934	37-C	SELF LUBRICATING
									~~1~~		~~1~~		~~1~~	~~1~~					106	CONNECTING ROD TOGGLE LINK	1	80	93-E	SST	ASTM-A276 TYPE 316, COND A	64-C	~~CF, ZINC PLATED NOTE 38 REF 2~~
									~~1~~		~~1~~		~~1~~	~~1~~					105	CONNECTING ROD TOGGLE LINK	1	79	95-E	SST	ASTM-A276 TYPE 316, COND A	64-C	~~CF, ZINC PLATED NOTE 38 REF 2~~
							~~1~~												104	~~TOGGLE LINK LH~~	~~1~~	~~78~~	~~97-E~~	~~SST~~	~~ASTM-A276 TYPE 316, COND A~~	~~112-C~~	
							~~1~~												103	~~TOGGLE LINK RH~~	~~1~~	~~77~~	~~97-E~~	~~SST~~	~~ASTM-A276 TYPE 316, COND A~~	~~112-C~~	
~~1~~	~~1~~	~~1~~	~~1~~	~~1~~	~~1~~	~~1~~		~~1~~		~~1~~		~~1~~							102	~~TOGGLE LINK LH~~	~~1~~	~~76~~	~~97-E~~	~~SST~~	~~ASTM-A276 TYPE 316, COND A~~	79-C	~~CF, ZINC PLATED NOTE 38 REF 2~~
~~1~~	~~1~~	~~1~~	~~1~~	~~1~~	~~1~~	~~1~~		~~1~~		~~1~~		~~1~~							101	~~TOGGLE LINK RH~~	~~1~~	~~75~~	~~97-E~~	~~SST~~	~~ASTM-A276 TYPE 316, COND A~~	79-C	~~CF, ZINC PLATED NOTE 38 REF 2~~
									~~1~~		~~1~~		~~1~~	~~1~~					100	~~TOGGLE LINK LH~~	~~1~~	~~74~~	~~101-E~~	~~SST~~	~~ASTM-A276 TYPE 316, COND A~~	64-C	~~CF, ZINC PLATED NOTE 38 REF 2~~
									~~1~~		~~1~~		~~1~~	~~1~~					99	~~TOGGLE LINK RH~~	~~1~~	~~73~~	~~101-E~~	~~SST~~	~~ASTM-A276 TYPE 316, COND A~~	64-C	~~CF, ZINC PLATED NOTE 38 REF 2~~
															~~1~~	~~1~~	~~1~~		98	~~TOGGLE LINK LH~~	~~1~~	~~72~~	~~99-E~~	~~SST~~	~~ASTM-A276 TYPE 316, COND A~~	39-B	~~CF, ZINC PLATED NOTE 38 REF 2~~
35 36	33 34	31 32	29 30	27 28	25 26	23 24	21 22	19 20	17 18	15 16	13 14	11 12	9 10	7 8	5 6	3 4	1 2										

PARTS LIST

REVISIONS (CONTINUED FROM SHEET 2)

ZONE		DESCRIPTION	DATE	APPROVED
38-E 46-D 55-E 63-E 71-E 79-F 87-E 95-F 103-F 110-F 119-F 127-F 135-F 143-F	A	ADDED PC NOS 32 AND 158 TO DOOR ASSY.		
159-A		DELETED SILL NOTE.		
161-A 169-A 177-A		ADDED SHEETS 21, 22 AND 23		
181-F		ADDED ASSY OO THRU TT TO HINGE ASSY TABLE.		
181-F		DELETED ASSY S THRU BB OF HINGE ASSY TABLE		
176-A		ADDED PC NOS 156 THRU 158 TO PARTS LIST.		
22-D 22-E		DELETED ASSY Q THRU R OF HANDLE ASSY, REPLACED WITH ASSY G AND H.		
7-A 14-A 22-A 34-A 37-A 42-A 45-A 59-A 62-A 67-A 70-A 75-A 78-A 83-A 86-A 91-A 94-A 99-A 102-A 107-A 110-A 115-A 118-A 123-A 126-A 131-A 134-A 139-A 142-A		ADDED ASSEMBLY A-1 THRU N-2 TO TO PARTS LIST AND TO DOOR ASSEMBLIES		
		DELETED PC NOS 44-77 AND 88-106		

DRAWING 803-6397268 SHEET 3 REV A

DEPARTMENT OF THE NAVY
NAVAL SEA SYSTEMS COMMAND
WASHINGTON, D.C. 20362-5101

DRAWN
ISSUED

SIZE	CAGE CODE	ESWBS	DRAWING NO.	REV
F	53711	803	6397268	A

SCALE: NONE MASS SHEET 3

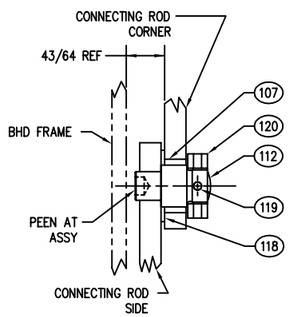

SECTION 32-D
(DETAIL 62-A, 78-A, 86-A, 94-A, 102-A, 110-A, 118-A, 134-A & 142-A
SCALE: 12=1'-0

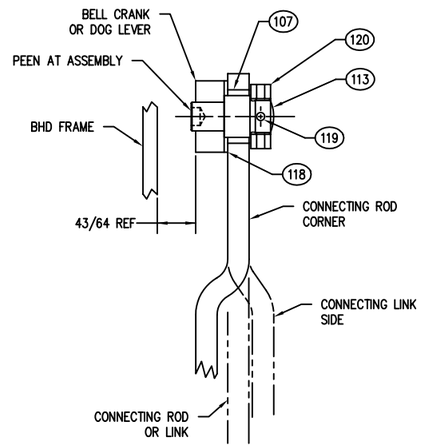

SECTION 30-D
(DETAIL 37-A, 45-A, 54-A, 62-A, 70-A, 78-A, 86-A, 94-A, 102-A, 110-A, 118-A, 126-A, 134-A & 142-A)
SCALE: 12=1'-0

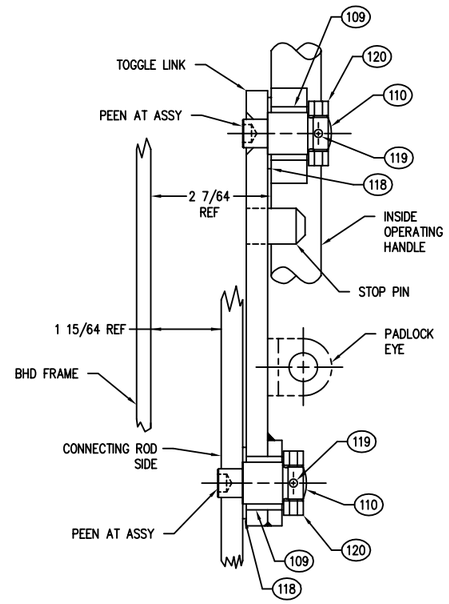

SECTION 29-D
(DETAIL 37-A, 45-A & 54-A)
SCALE: 12=1'-0

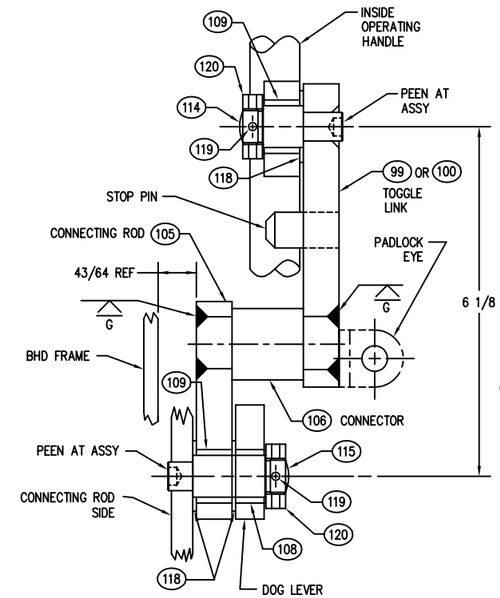

SECTION 27-D
(DETAIL 62-A, 70-A, 86-A & 102-A)
SCALE: 12=1'-0

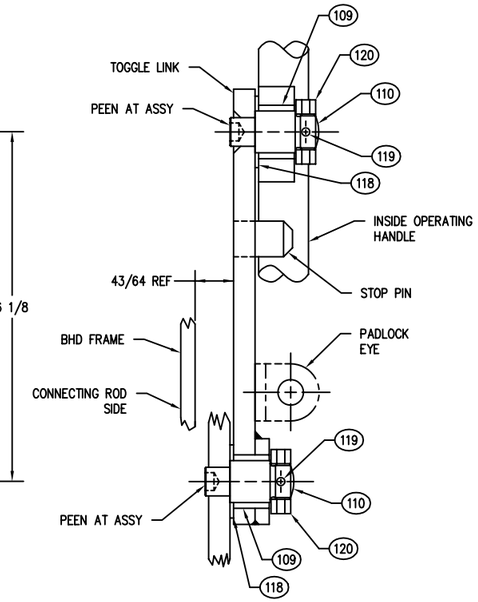

SECTION 25-D
(DETAIL 78-A, 94-A, 110-A, 118-A, 126-A, 134-A & 142-A)
SCALE: 12=1'-0

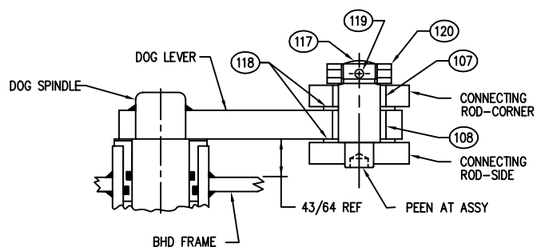

SECTION 31-C
(DETAIL 70-A)
SCALE: 12=1'-0

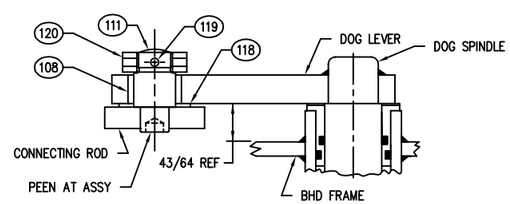

SECTION 29-C
(DETAIL 62-A, 70-A, 78-A, 86-A, 94-A, 102-A, 110-A, 118-A, 126-A, 134-A & 142-A)
SCALE: 12=1'-0

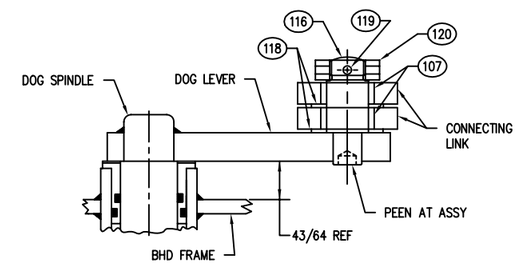

SECTION 27-C
(DETAIL 37-A, 45-A & 54-A)
SCALE: 12=1'-0

CONTINUED ON SHEET 22

36	35	34	33	32	31	30	29	28	27	26	25	24	23	22	21	20	19	18	17	16	15	14	13	12	11	10	9	8	7	6	5	4	3	2	1	PC NO.	NAME	REFNO.	PC NO.	ZONE DET ON	MATERIAL	IDENTIFYING NO. OR SPECIFICATION	ZONE	REMARKS
															1																					155	BUMPER ASSY ASSY NN	1	ASSY NN	DET 79-E	–	–	–	
1	1	1	1	1	1	1	1	1	1	1	1	1	1			1	1	1	1	1	1	1	1	1	1	1	1	1	1	1	1	1	1	1	1	154	BUMPER ASSY ASSY MM	1	ASSY MM	DET 79-E	–	–	–	
1	1	1	1	1	1	1	1	1	1	1	1	1	1	1	1	1	1	1	1	1	1	1	1	1	1	1	1	1	1	1	1	1	1	1	1	153	HOOK ASSY ASSY LL	1	ASSY LL	DET 79-E	–	–	34-D	
							AR																													~~152~~	~~FIXED LIGHT ASSY ASSY KK~~	~~1~~	~~ASSY KK~~	~~DET 74-D~~	~~–~~	~~–~~	~~106-E~~	~~NOTE 2~~
AR	AR	AR	AR	AR	AR	AR	AR	AR	AR	AR	AR	AR	AR																							151	FIXED LIGHT ASSY ASSY JJ	1	ASSY JJ	DET 74-D	–	–	74-E	NOTE 2
										1		1			1	1																				150	HASP ASSY ASSY II	1	ASSY II	DET 66-E	–	–	63-C	NOTE 2
										1		1			1	1																				149	HASP ASSY ASSY HH	1	ASSY HH	DET 66-E	–	–	63-C	NOTE 2
																															1	1	1			148	HASP ASSY ASSY GG	1	ASSY GG	DET 66-E	–	–	38-B	NOTE 2
																															1	1	1			147	HASP ASSY ASSY FF	1	ASSY FF	DET 66-E	–	–	38-B	NOTE 2
1	1	1	1	1	1	1	1	1	1		1			1																						146	HASP ASSY ASSY EE	1	ASSY EE	DET 66-E	–	–	80-C	NOTE 2
1	1	1	1	1	1	1	1	1	1		1			1																						145	HASP ASSY ASSY DD	1	ASSY DD	DET 66-E	–	–	80-C	NOTE 2
1	1	1	1	1	1	1	1	1	1	1	1	1	1	1	1	1	1	1	1	1	1	1	1	1	1	1	1	1	1	1	1	1	1	1	1	144	HASP ASSY ASSY CC	1	ASSY CC	DET 72-E	–	–	34-B	NOTE 2
															2																					~~143B~~	~~HINGE ASSY ASSY BB~~	~~1~~	~~ASSY BB~~	~~DET 58-B~~			~~108-B~~	~~NOTE 2~~
																																				~~143A~~	~~HINGE ASSY ASSY Z~~	~~1~~	~~ASSY Z~~	~~DET 59-C~~	–	–	~~108-B~~	~~NOTE 2~~

ASSEMBLY NO.
QUANTITY PER ASSEMBLY

PARTS LIST 4

DEPARTMENT OF THE NAVY NAVAL SEA SYSTEMS COMMAND WASHINGTON, D.C. 20362-5101	SIZE	CAGE CODE	ESWBS	DRAWING NO.	REV
DRAWN	F	53711	803	6397268	A
ISSUED	SCALE: AS SHOWN	MASS		SHEET 4	

DRAWING 803-6397268 SHEET 4 REV A

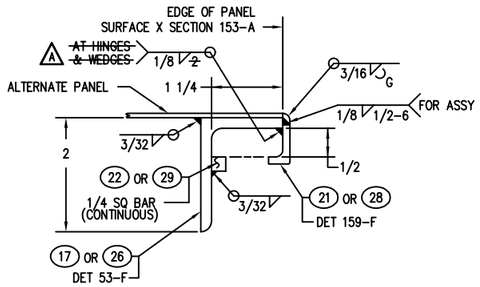

DETAIL 38-E
ALTERNATE EDGE SECTION
(SEE SECTION 34-E)
SCALE: 12=1'-0

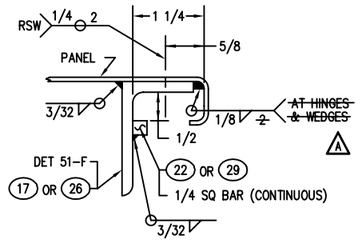

DETAIL 36-E
ALTERNATE EDGE SECTION
(SEE SECTION 34-E)
SCALE: 12=1'-0

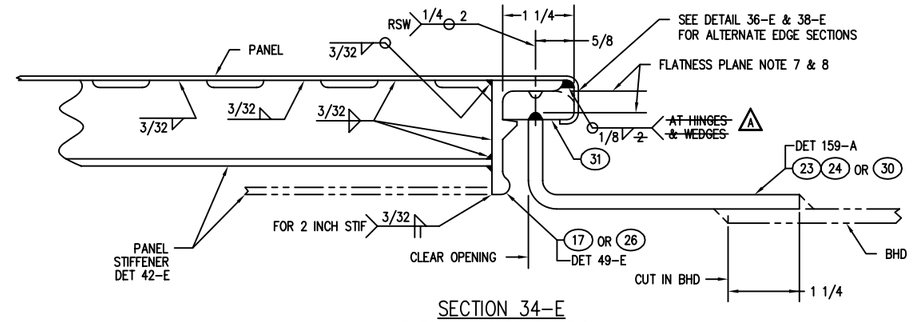

SECTION 34-E
TYPICAL EDGE SECTION
SCALE: 12=1'-0

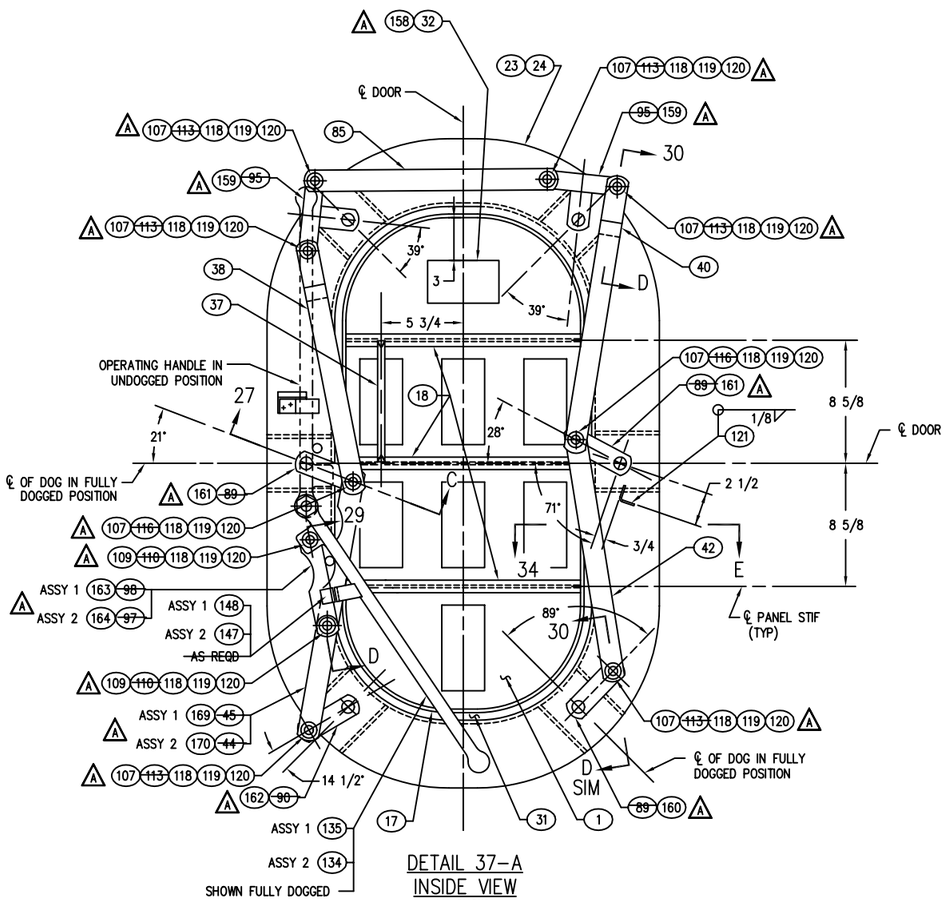

DETAIL 37-A
INSIDE VIEW
LH SHOWN
RH TO OPP HAND
SCALE: 3=1'-0

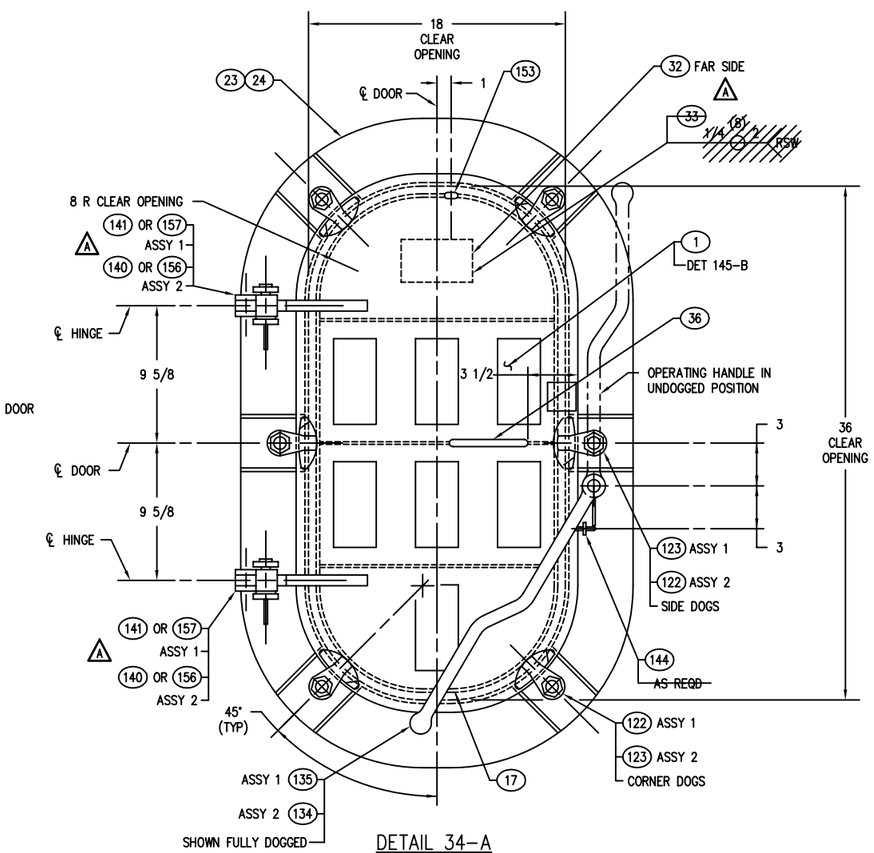

DETAIL 34-A
OUTSIDE VIEW
18 X 36 WT QA DOOR – 6 DOG
ASSEMBLY 1 – LH SHOWN
ASSEMBLY 2 – RH TO OPP HAND
SCALE: 3=1'-0

DEPARTMENT OF THE NAVY NAVAL SEA SYSTEMS COMMAND WASHINGTON, D.C. 20362-5101	SIZE	CAGE CODE	ESWBS	DRAWING NO.	REV
DRAWN	F	53711	803	6397268	A
ISSUED	SCALE: AS SHOWN	MASS		SHEET 5	

DRAWING 803-6397268 SHEET 5 REV A

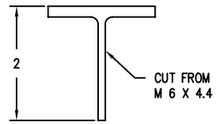

NOTE:
L 1-1/2 X 1-1/2 X 1/4
MAY BE SUBSTITUTED FOR
THIS SECTION. IF ANGLE
IS USED TOE TOWARDS
BOTTOM OF DOOR.

SECTION 48-E
PANEL STIFFENER (20)
(SEE DETAIL 42-E)
SCALE: 12=1'-0

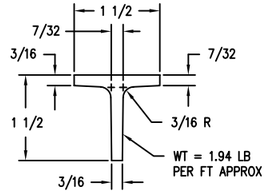

NOTE:
L 1-1/2 X 1-1/2 X 3/16 OR
1-3/4 X 1-7/8 T CUT FROM M 6 X 4.4
MAY BE SUBSTITUTED FOR THIS
SECTION. IF ANGLE IS USED TOE
TOWARDS BOTTOM OF DOOR.

SECTION 46-E
PANEL STIFFENER (19)
(SEE DETAIL 42-E)
SCALE: 12=1-0

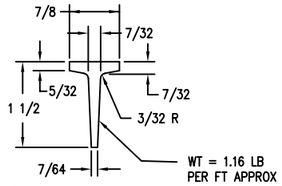

NOTE:
L 1-1/2 X 1-1/2 X 1/8 OR
1-1/2 X 1 T CUT FROM M 6 X 4.4
MAY BE SUBSTITUTED FOR THIS
SECTION. IF ANGLE IS USED TOE
TOWARDS BOTTOM OF DOOR.

SECTION 44-E
PANEL STIFFENER (18) OR (27)
(SEE DETAIL 42-E)
SCALE: 12=1'-0

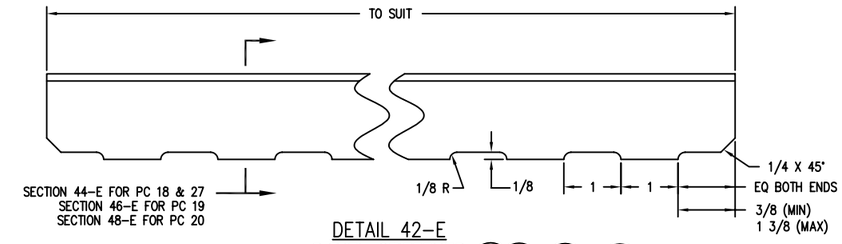

DETAIL 42-E
PANEL STIFFENER (19) (20) & (18) OR (27)
SCALE: 12=1'-0

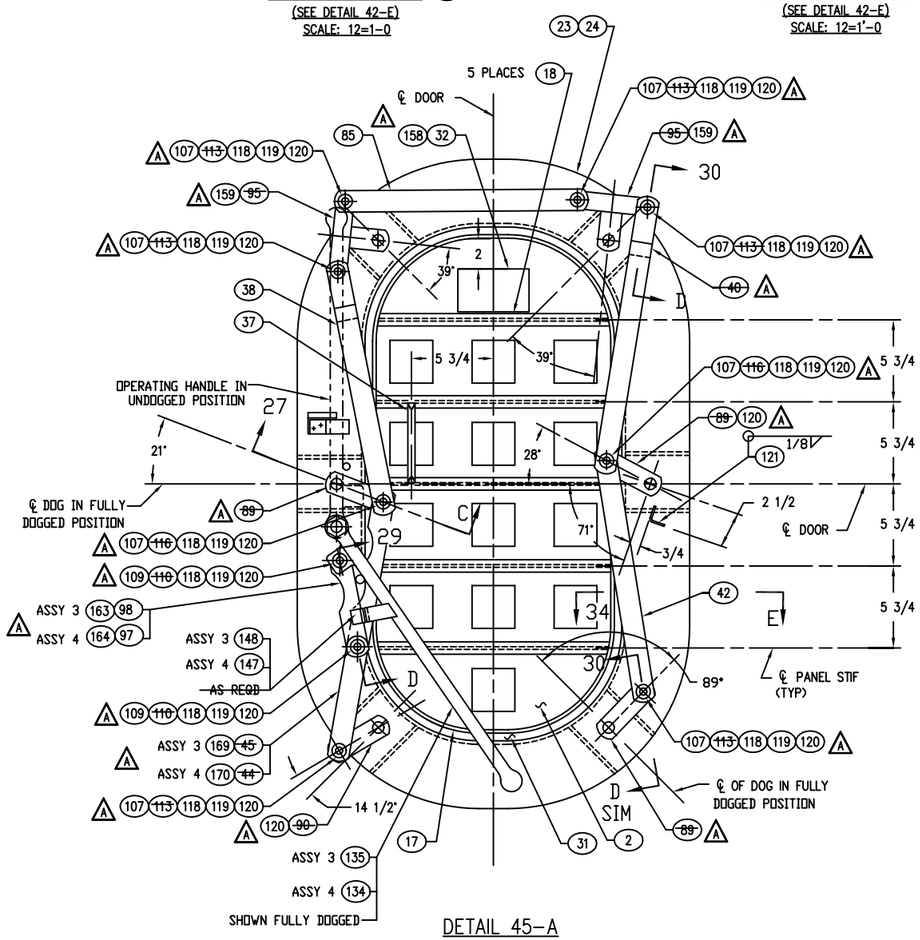

DETAIL 45-A
INSIDE VIEW
LH SHOWN
RH TO OPP HAND
SCALE: 3=1'-0

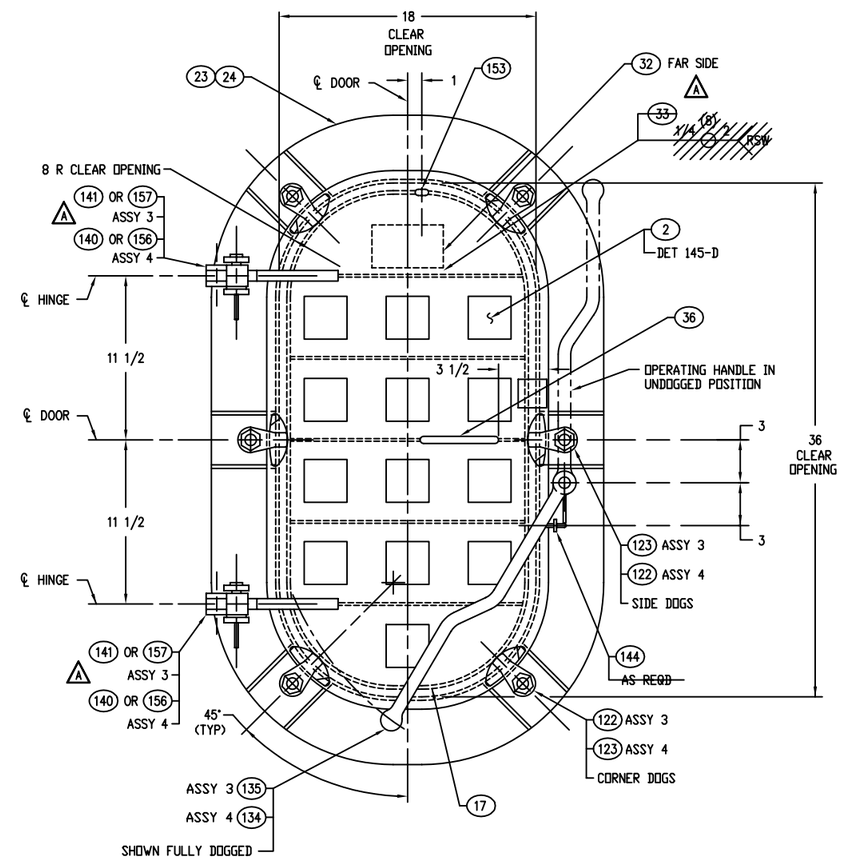

DETAIL 42-A
OUTSIDE VIEW
18 X 36 WT QA DOOR - 6 DOG
ASSEMBLY 3 - LH SHOWN
ASSEMBLY 4 - RH TO OPP HAND
SCALE: 3=1'-0

DEPARTMENT OF THE NAVY NAVAL SEA SYSTEMS COMMAND WASHINGTON, D.C. 20362-5101	SIZE	CAGE CODE	ESWBS	DRAWING NO.	REV
DRAWN	F	53711	803	6397268	A
ISSUED	SCALE: AS SHOWN	MASS		SHEET 6	

DRAWING 803-6397268 SHEET 6 REV A

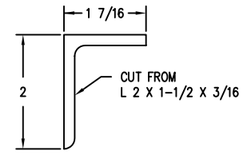

DETAIL 53-F
ALTERNATE RIM STIFFENER (17) OR (26)
SCALE: 12=1'-0

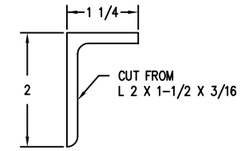

DETAIL 51-F
ALTERNATE RIM STIFFENER (17) OR (26)
SCALE: 12=1'-0

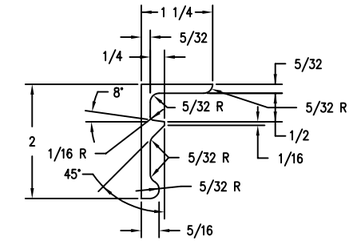

DETAIL 49-E
RIM STIFFENER (17) OR (26)
SCALE: 12=1'-0

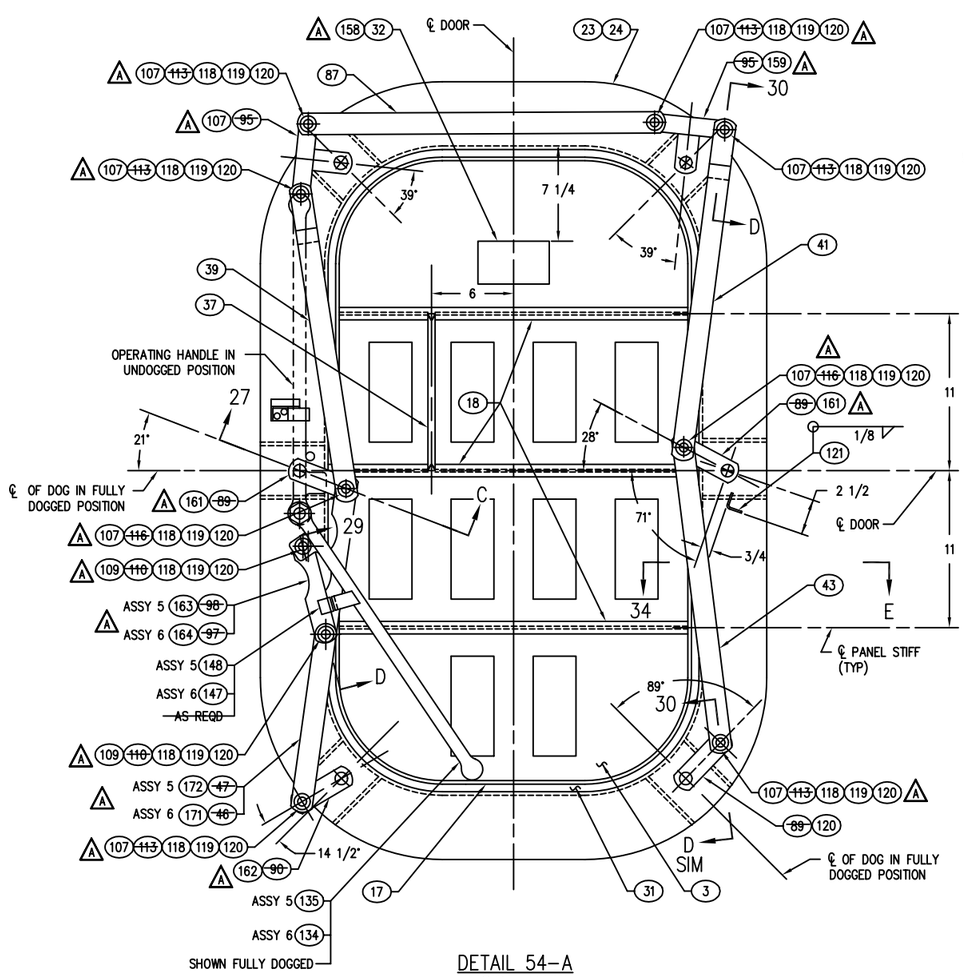

DETAIL 54-A
INSIDE VIEW
LH SHOWN
RH TO OPP HAND
SCALE: 3=1'-0

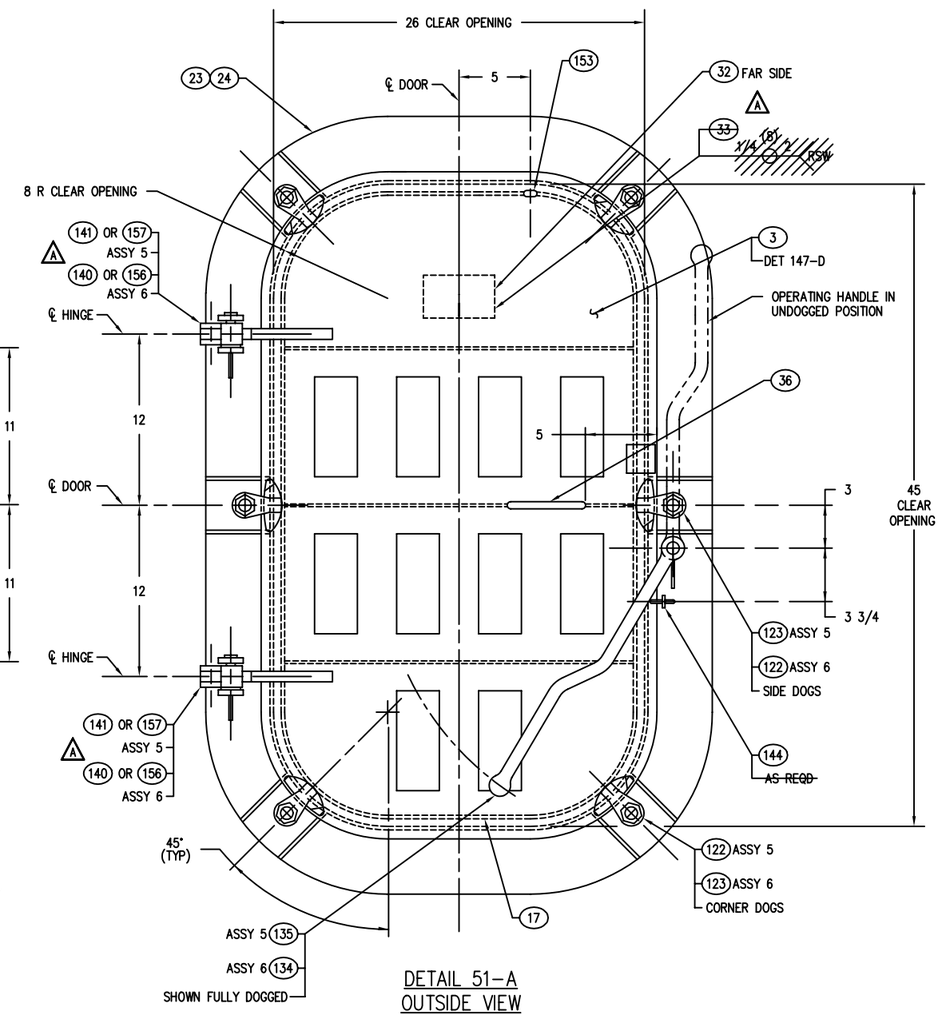

DETAIL 51-A
OUTSIDE VIEW
26 X 45 WT QA DOOR - 6 DOG
ASSEMBLY 5 - LH SHOWN
ASSEMBLY 6 - RH TO OPP HAND
SCALE: 3=1'-0

DEPARTMENT OF THE NAVY NAVAL SEA SYSTEMS COMMAND WASHINGTON, D.C. 20362-5101	SIZE	CAGE CODE	ESMBS	DRAWING NO.	REV
DRAWN	F	53711	803	6397268	A
ISSUED	SCALE: AS SHOWN	MASS		SHEET 7	

DRAWING 803-6397268 SHEET 7 REV A

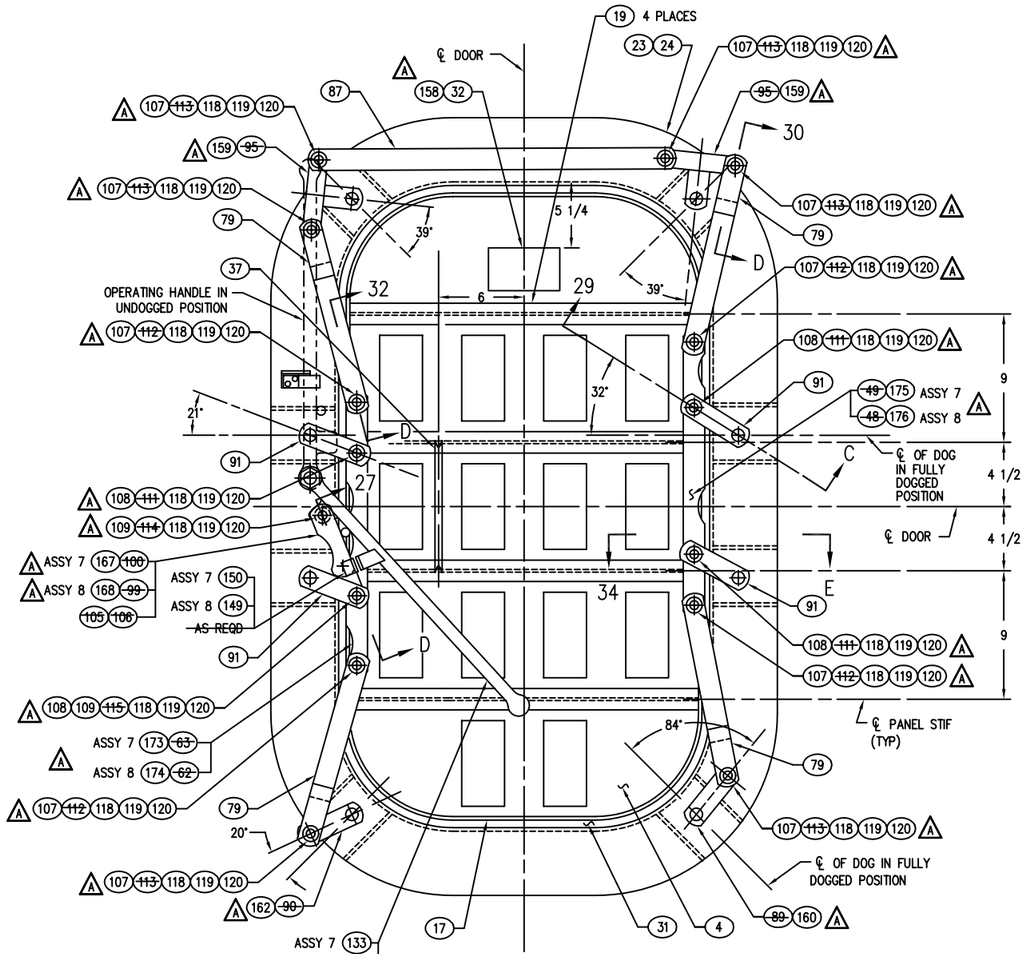

DETAIL 62–A
INSIDE VIEW
LH SHOWN
RH TO OPP HAND
SCALE: 3=1'–0

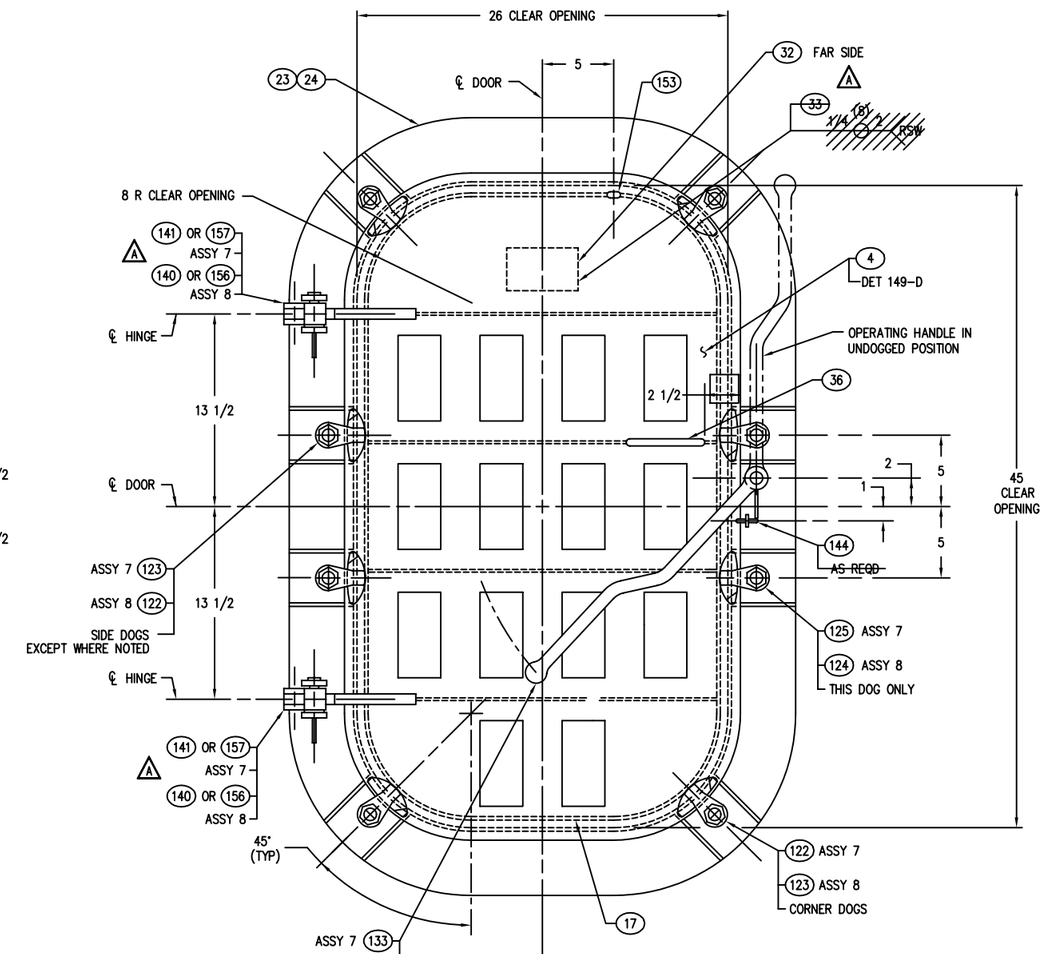

DETAIL 59–A
OUTSIDE VIEW
26 X 45 WT QA DOOR – 8 DOG
ASSEMBLY 7 – LH SHOWN
ASSEMBLY 8 – RH TO OPP HAND
SCALE: 3=1'–0

DEPARTMENT OF THE NAVY NAVAL SEA SYSTEMS COMMAND WASHINGTON, D.C. 20362-5101	SIZE	CAGE CODE	ESWBS	DRAWING NO.	REV
DRAWN	F	53711	803	6397268	A
ISSUED	SCALE: AS SHOWN	MASS		SHEET 8	

DRAWING 603-6397268 SHEET 8 REV A

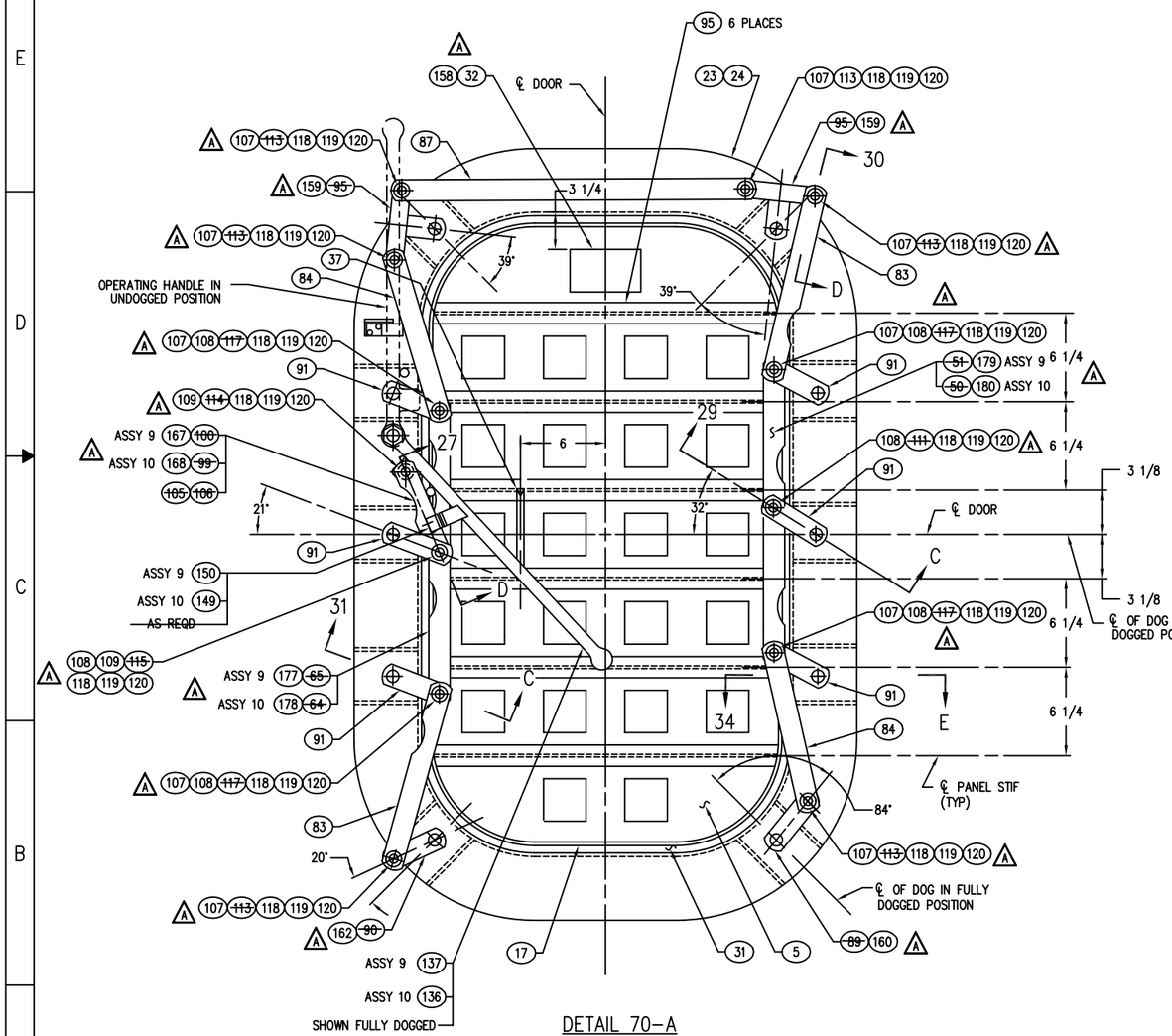

DETAIL 70-A
INSIDE VIEW
LH SHOWN
RH TO OPP HAND
SCALE: 3=1'-0

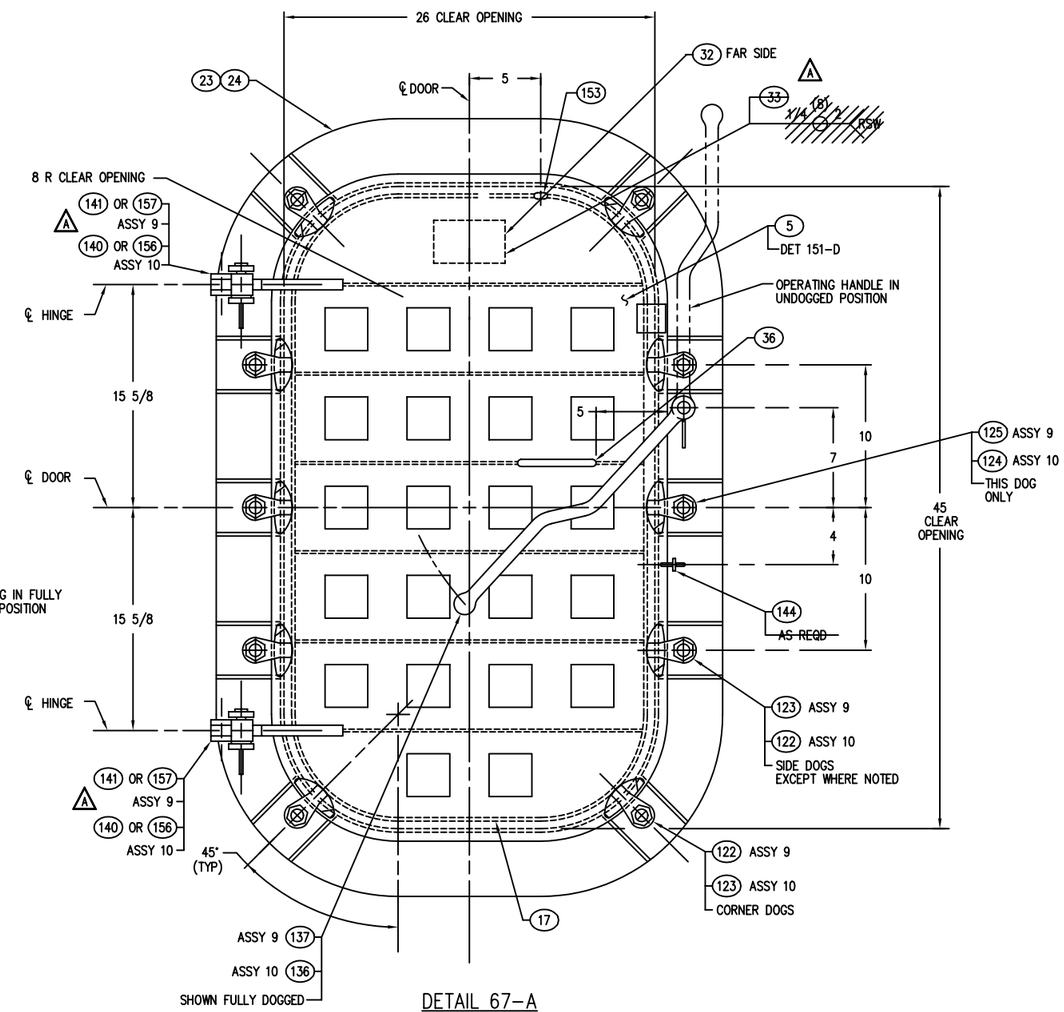

DETAIL 67-A
OUTSIDE VIEW
26 X 45 WT QA DOOR - 10 DOG
ASSEMBLY 9 - LH SHOWN
ASSEMBLY 10 - RH TO OPP HAND
SCALE: 3=1'-0

DEPARTMENT OF THE NAVY NAVAL SEA SYSTEMS COMMAND WASHINGTON, D.C. 20362-5101	SIZE	CAGE CODE	ESMBS	DRAWING NO.	REV
DRAWN	F	53711	803	6397268	A
ISSUED	SCALE: AS SHOWN	MASS		SHEET 9	

DRAWING 803-6397268 SHEET 9 REV A

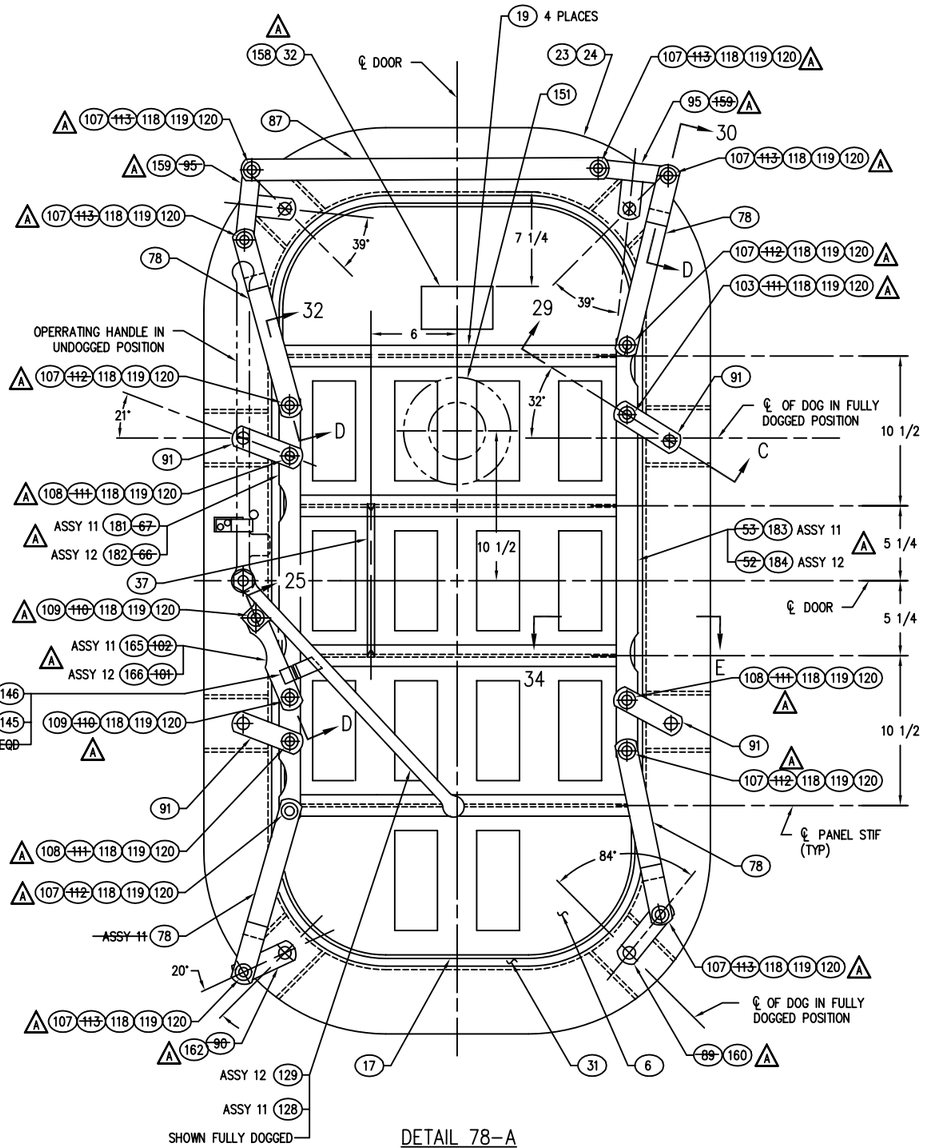

DETAIL 78-A
INSIDE VIEW
LH SHOWN
RH TO OPP HAND
SCALE: 3=1'-0

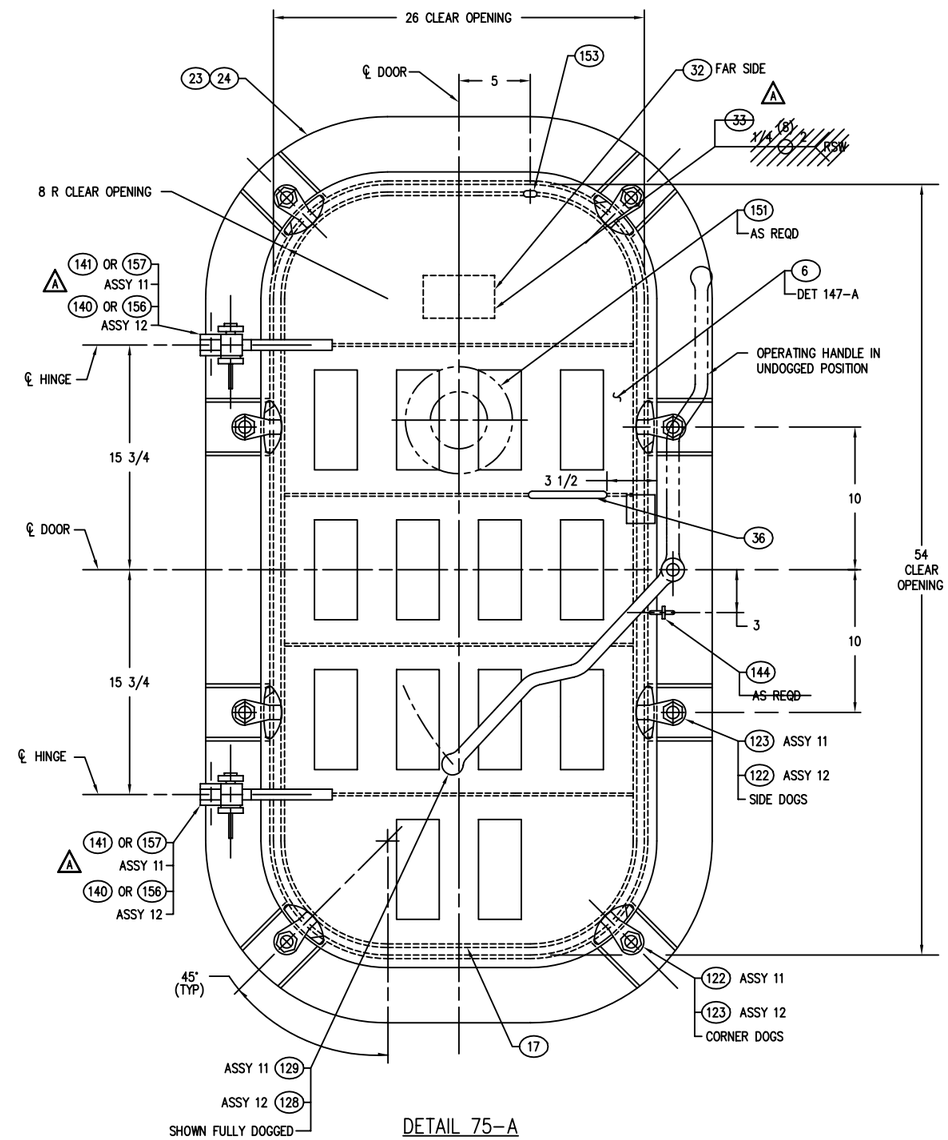

DETAIL 75-A
OUTSIDE VIEW
26 X 54 WT QA DOOR - 8 DOG
ASSEMBLY 11 - LH SHOWN
ASSEMBLY 12 - RH TO OPP HAND
SCALE: 3=1'-0

DEPARTMENT OF THE NAVY NAVAL SEA SYSTEMS COMMAND WASHINGTON, D.C. 20362-5101	SIZE	CAGE CODE	ESWBS	DRAWING NO.	REV
DRAWN	F	53711	803	6397268	A
ISSUED	SCALE: AS SHOWN	MASS		SHEET 10	

DRAWING 803-6397268 SHEET 10 REV A

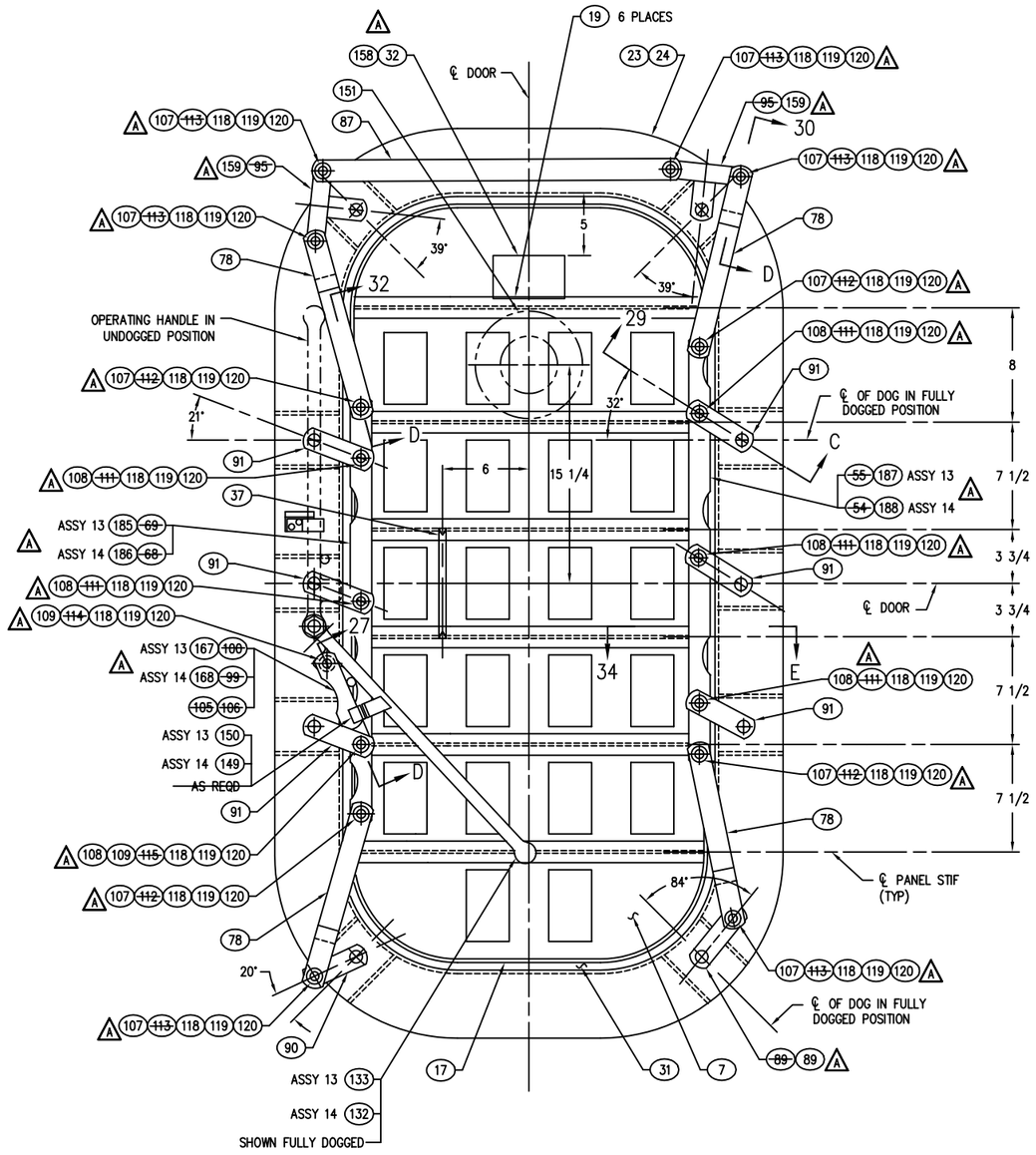

DETAIL 86-A
INSIDE VIEW
LH SHOWN
RH TO OPP HAND
SCALE: 3=1'-0

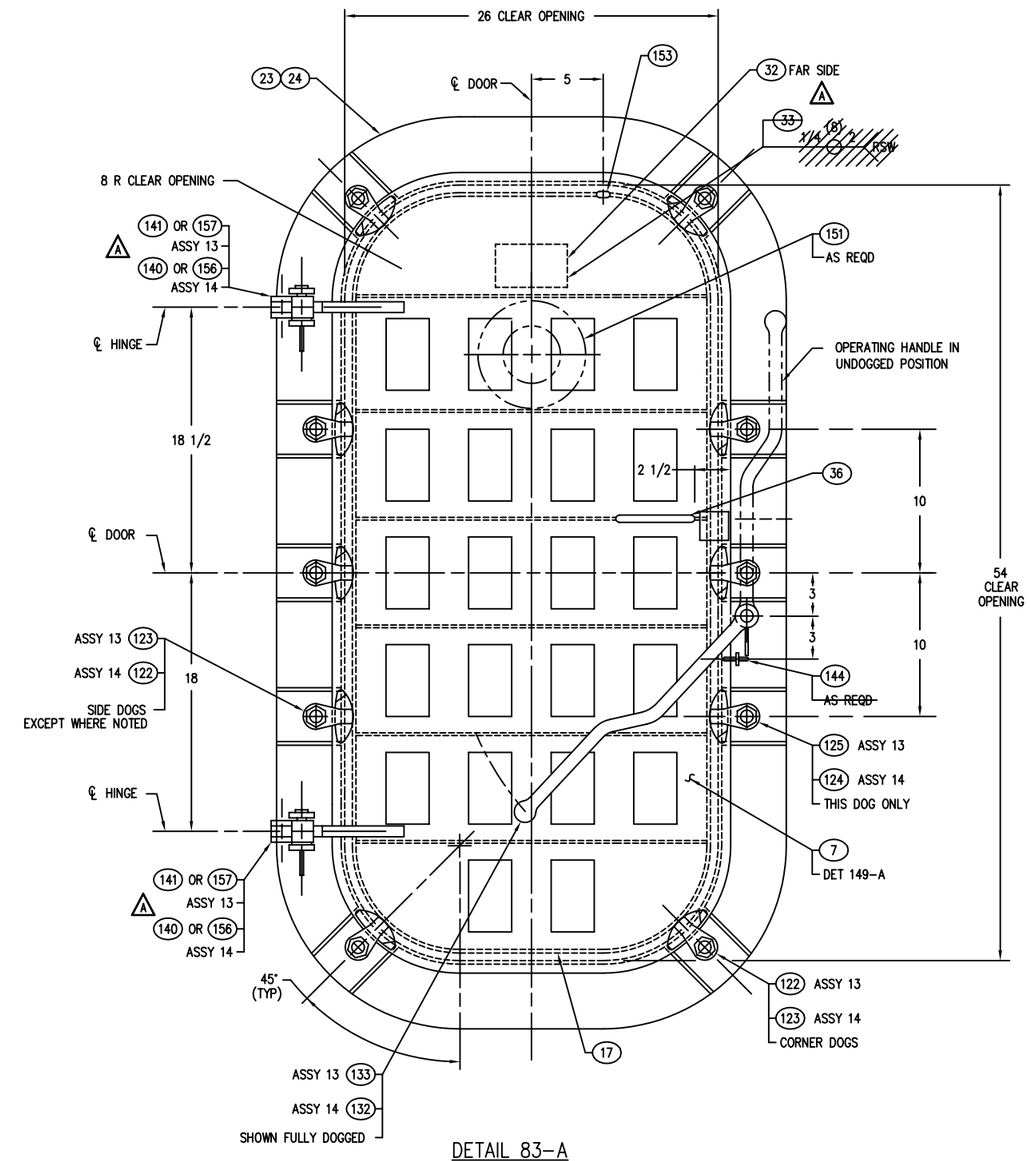

DETAIL 83-A
OUTSIDE VIEW
26 X 54 WT QA DOOR - 10 DOG
ASSEMBLY 13 - LH SHOWN
ASSEMBLY 14 - RH TO OPP HAND
SCALE: 3=1'-0

DEPARTMENT OF THE NAVY NAVAL SEA SYSTEMS COMMAND WASHINGTON, D.C. 20362-5101	SIZE	CAGE CODE	ESWBS	DRAWING NO.	REV
DRAWN	F	53711	803	6397268	A
ISSUED	SCALE: AS SHOWN	MASS		SHEET 11	

DRAWING 803-6397268 SHEET 11 REV A

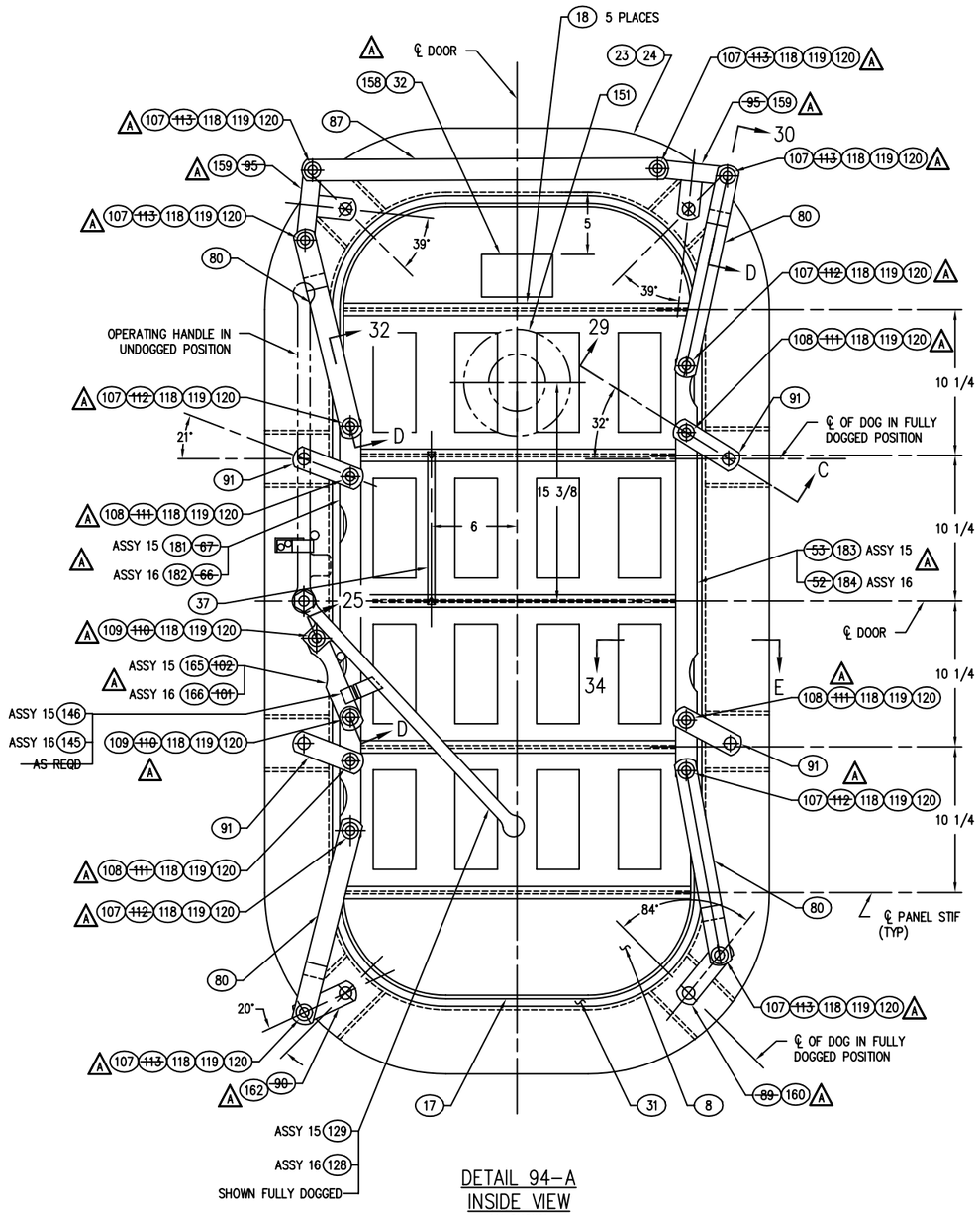

DETAIL 94-A
INSIDE VIEW
LH SHOWN
RH TO OPP HAND
SCALE: 3=1'-0

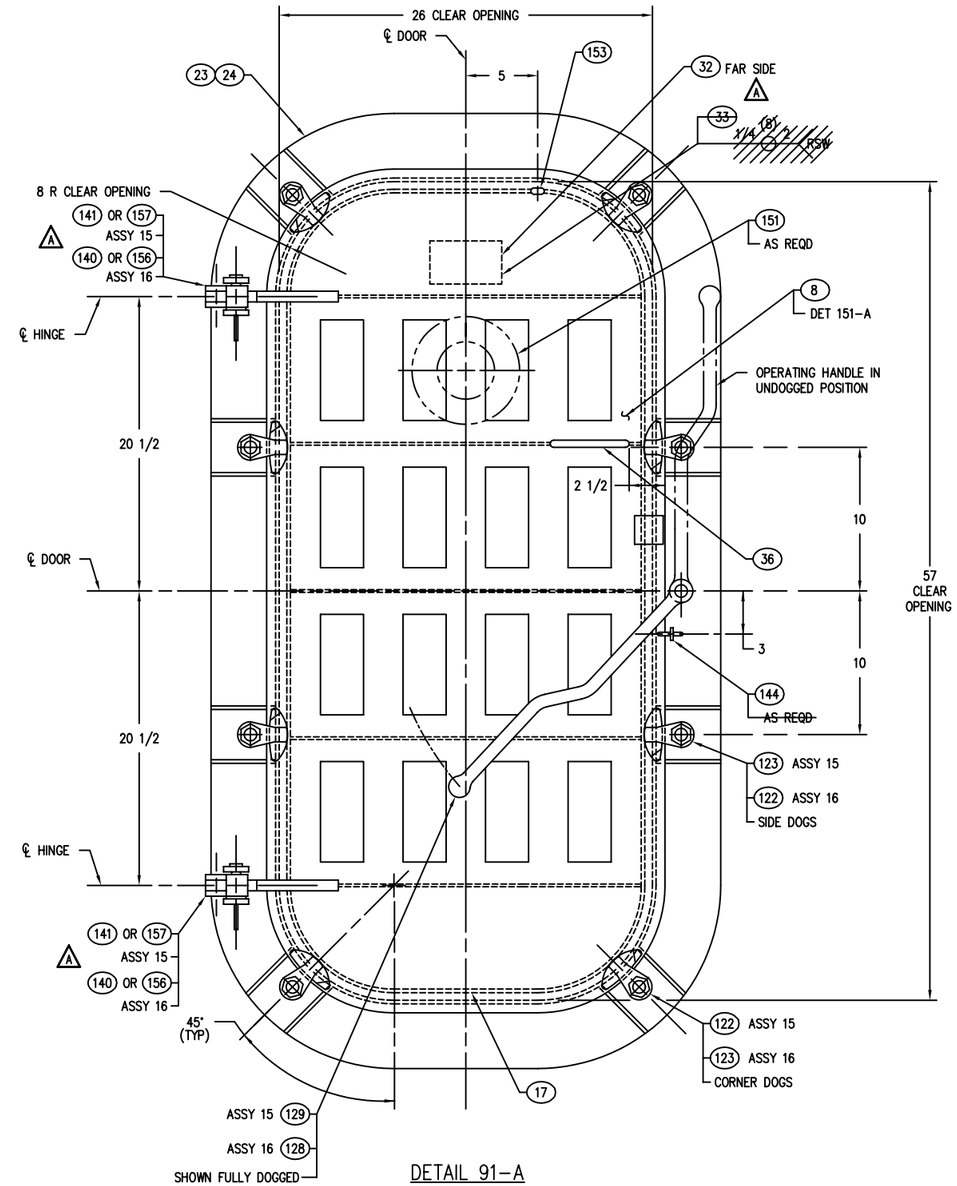

DETAIL 91-A
OUTSIDE VIEW
26 X 57 WT QA DOOR - 8 DOG
ASSEMBLY 15 - LH SHOWN
ASSEMBLY 16 - RH TO OPP HAND
SCALE: 3=1'-0

DEPARTMENT OF THE NAVY NAVAL SEA SYSTEMS COMMAND WASHINGTON, D.C. 20362-5101	SIZE	CAGE CODE	ESWBS	DRAWING NO.	REV
DRAWN	F	53711	803	6397268	A
ISSUED	SCALE: AS SHOWN	MASS		SHEET 12	

DRAWING 803-6397268 SHEET 12 REV A

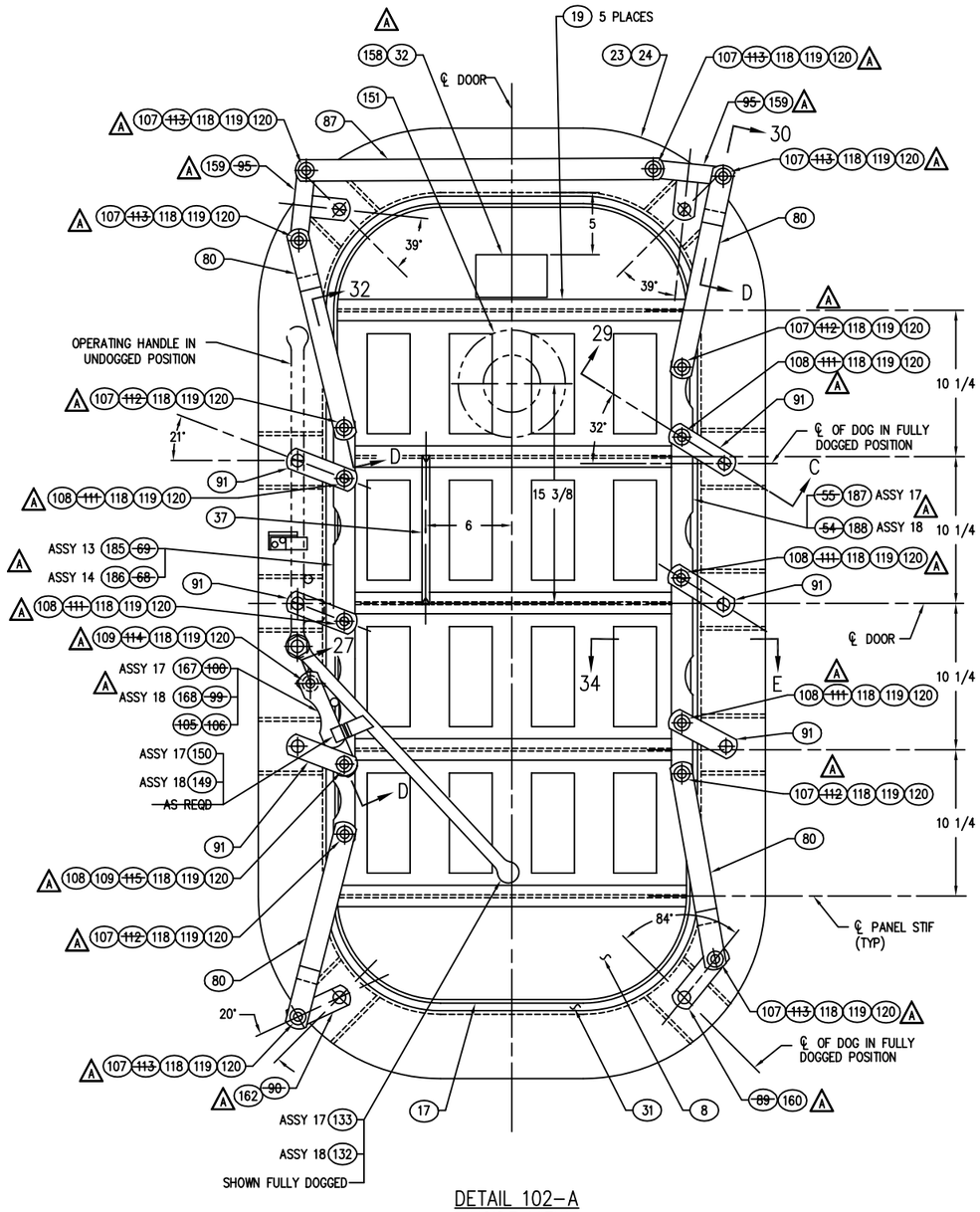

DETAIL 102-A
INSIDE VIEW
LH SHOWN
RH TO OPP HAND
SCALE: 3=1'-0

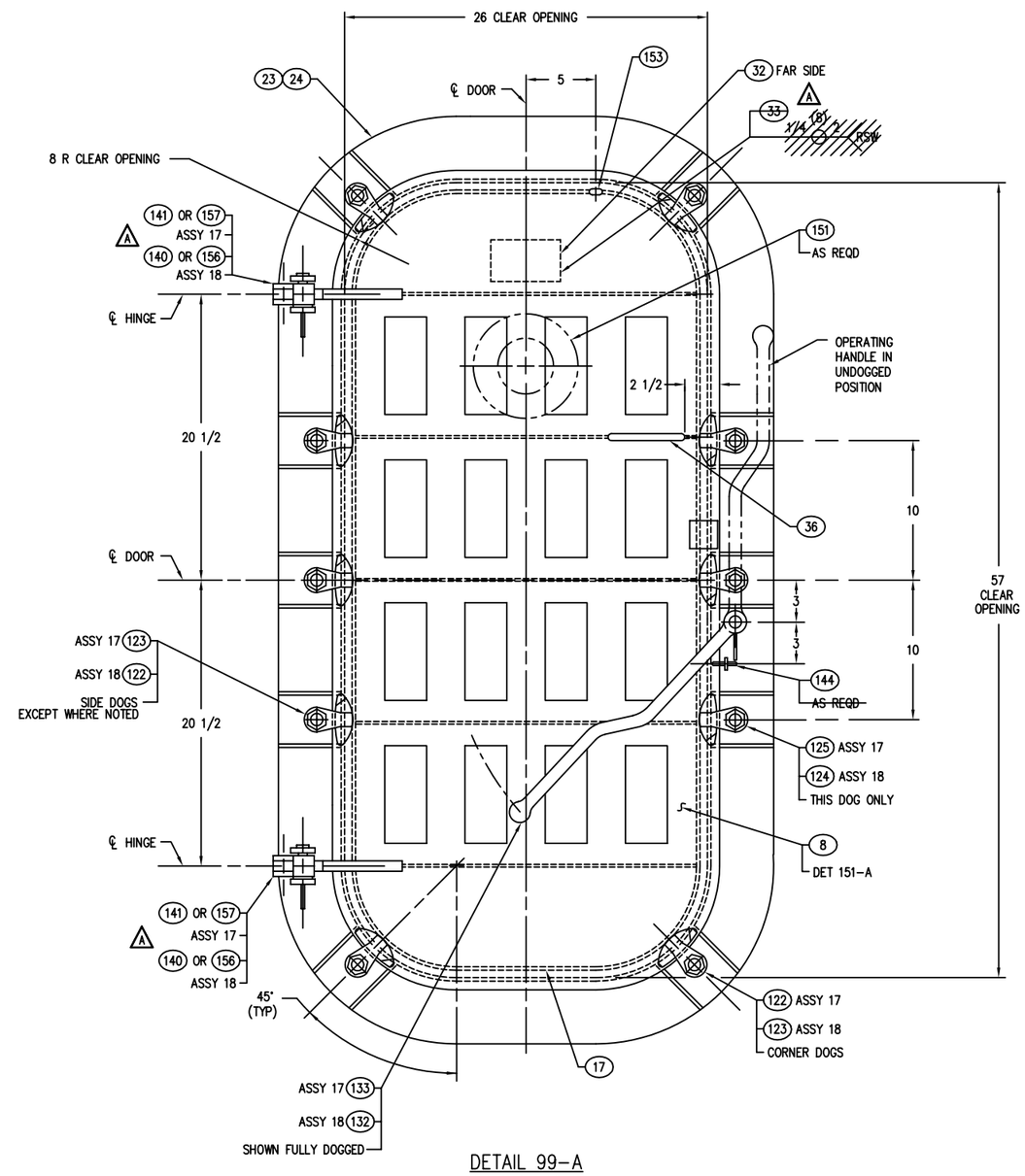

DETAIL 99-A
OUTSIDE VIEW
26 X 57 WT QA DOOR - 10 DOG
ASSEMBLY 17 - LH SHOWN
ASSEMBLY 18 - RH TO OPP HAND
SCALE: 3=1'-0

DEPARTMENT OF THE NAVY NAVAL SEA SYSTEMS COMMAND WASHINGTON, D.C. 20362-5101	SIZE	CAGE CODE	ESWBS	DRAWING NO.	REV
DRAWN	F	53711	803	6397268	A
ISSUED	SCALE: AS SHOWN	MASS		SHEET 13	

DRAWING 803-6397268 SHEET 13 REV A

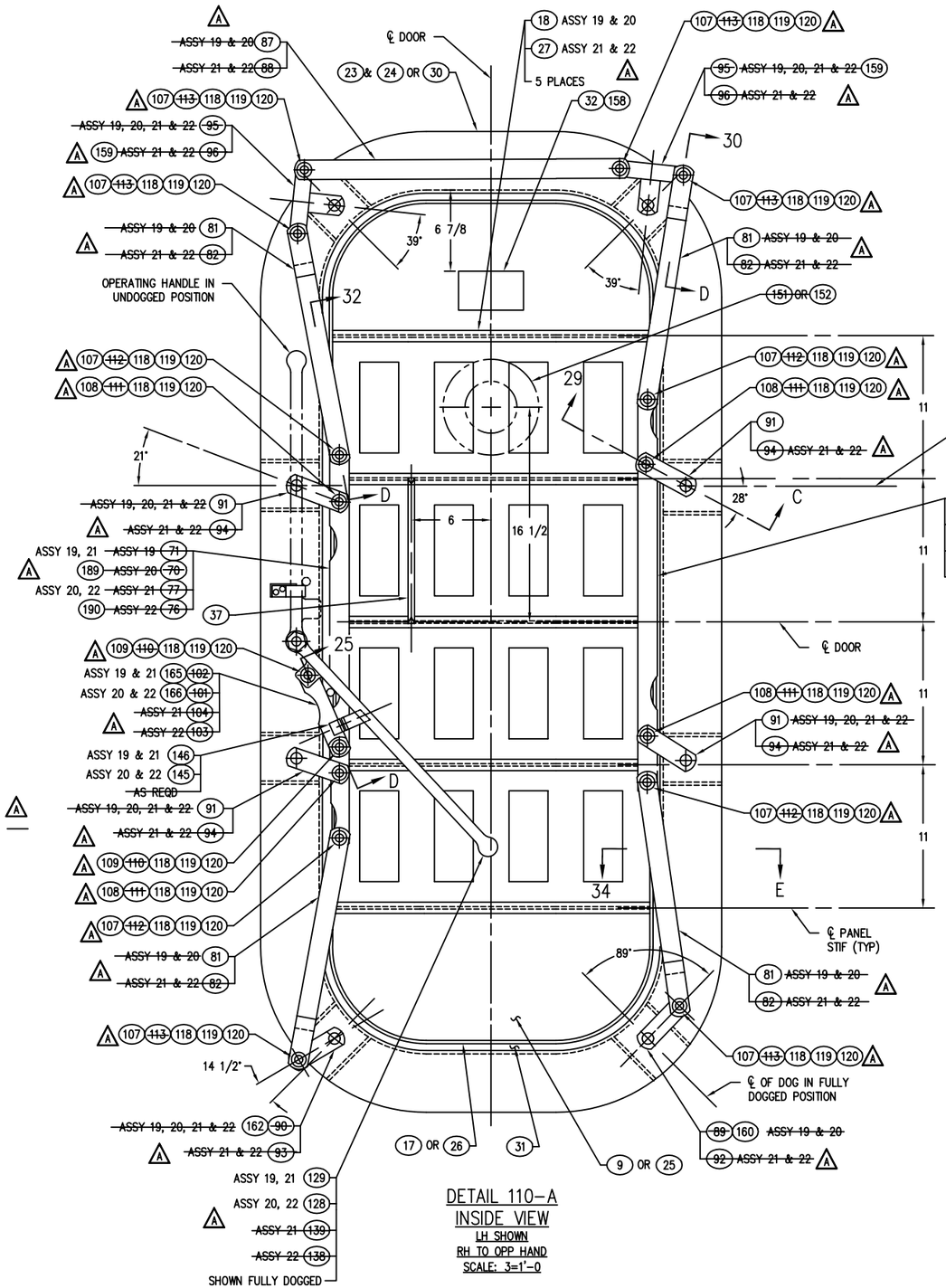

DETAIL 110–A
INSIDE VIEW
LH SHOWN
RH TO OPP HAND
SCALE: 3=1'–0

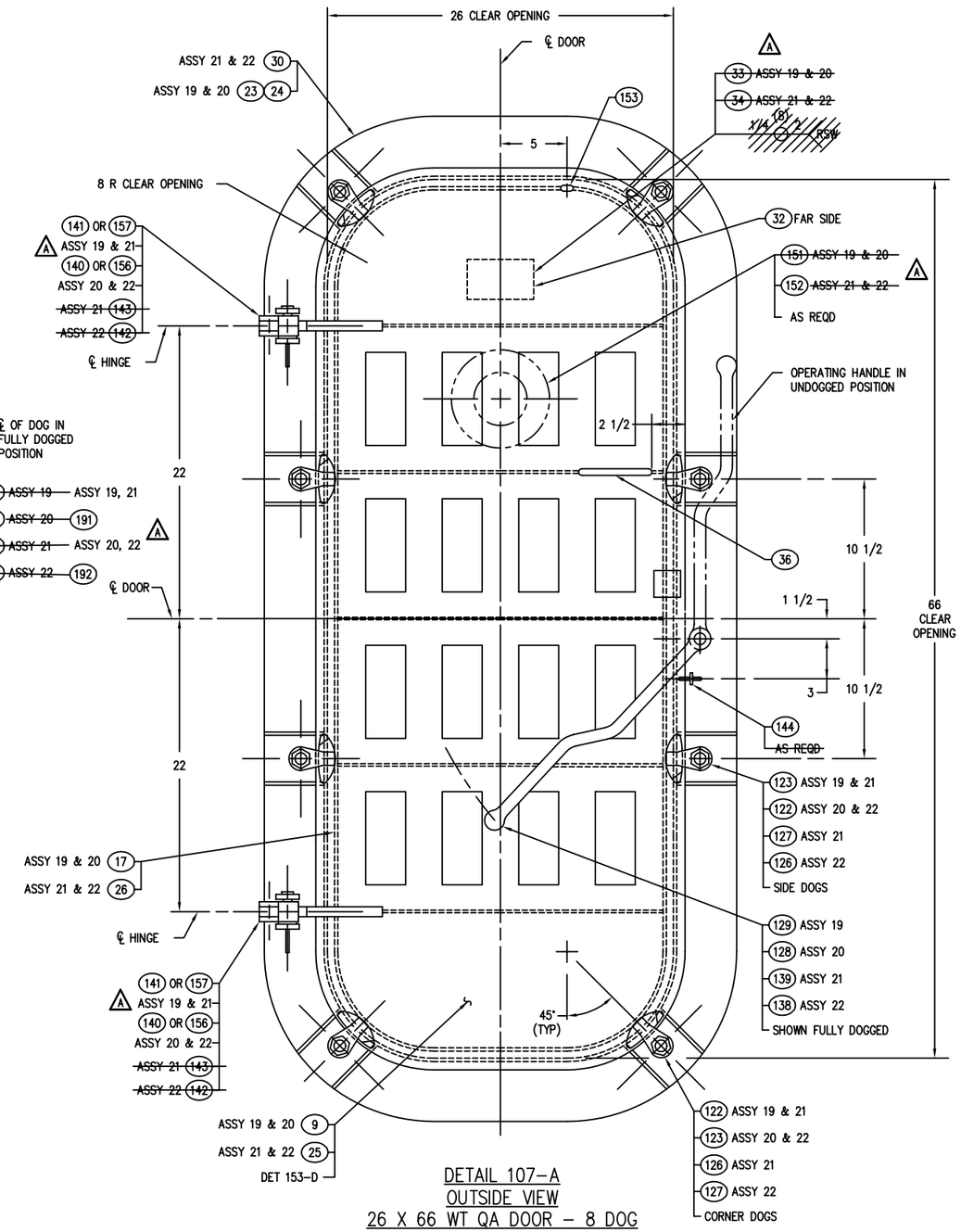

DETAIL 107–A
OUTSIDE VIEW
26 X 66 WT QA DOOR – 8 DOG
ASSEMBLY 19 & 21 – LH SHOWN
ASSEMBLY 20 & 22 – RH TO OPP HAND
SCALE: 3=1'–0

DEPARTMENT OF THE NAVY NAVAL SEA SYSTEMS COMMAND WASHINGTON, D.C. 20362-5101	SIZE	CAGE CODE	ESMBS	DRAWING NO.	REV
DRAWN	F	53711	803	6397268	A
ISSUED	SCALE: AS SHOWN	MASS		SHEET 14	

DRAWING 803-6397268 SHEET 14 REV A

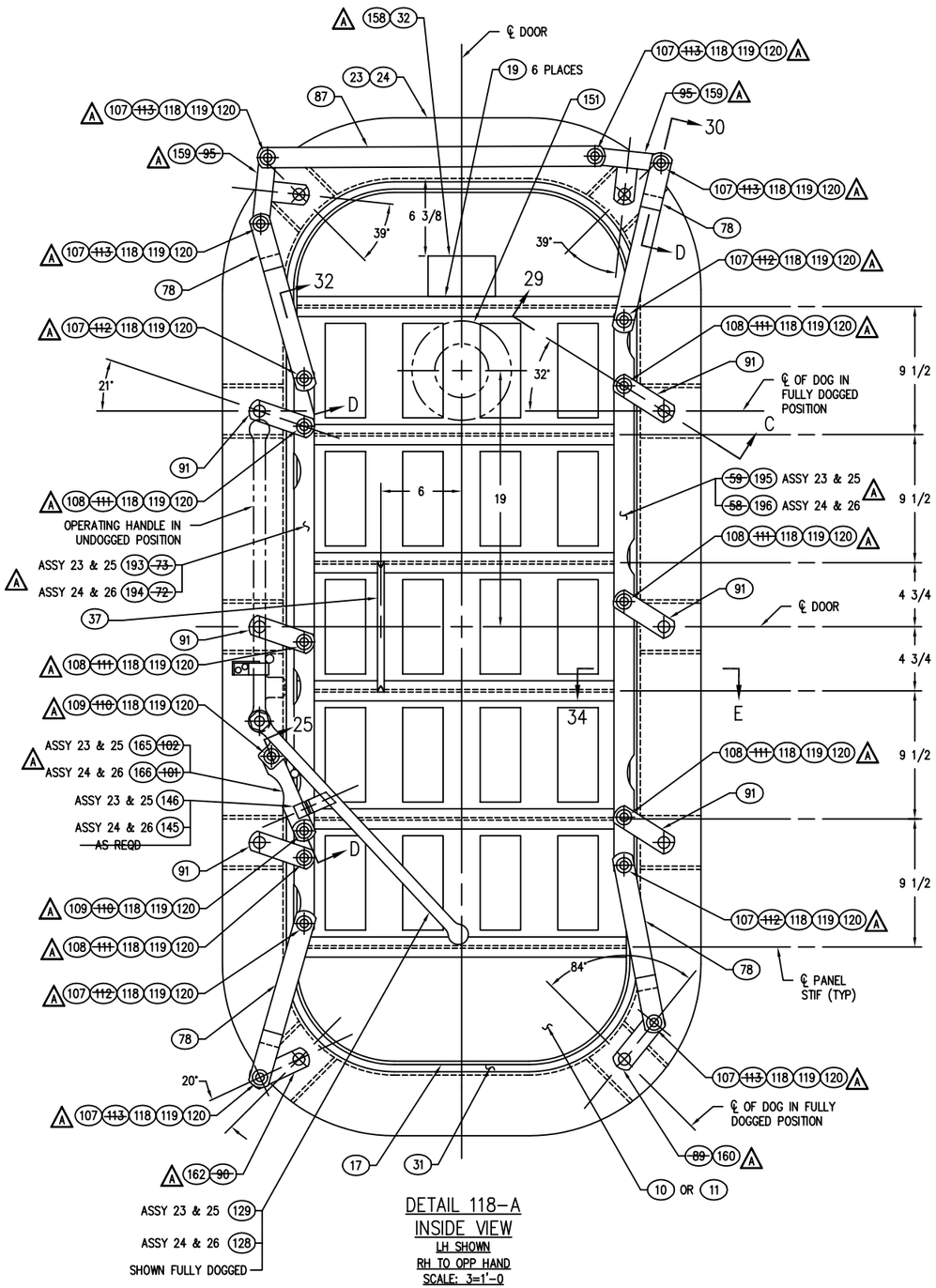

DETAIL 118-A
INSIDE VIEW
LH SHOWN
RH TO OPP HAND
SCALE: 3=1'-0

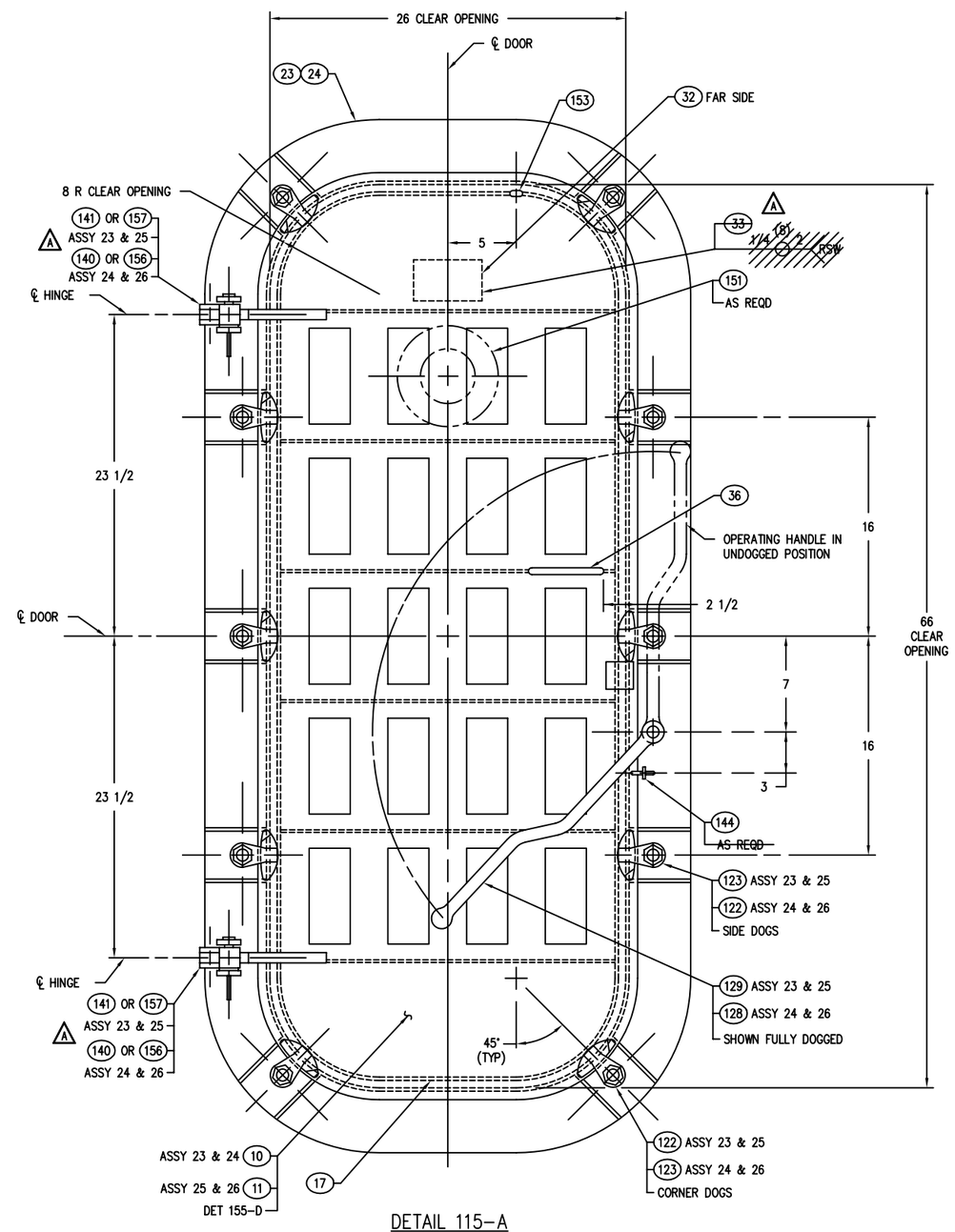

DETAIL 115-A
OUTSIDE VIEW
26 X 66 WT QA DOOR – 10 DOG
ASSEMBLY 23 & 25 – LH SHOWN
ASSEMBLY 24 & 26 – RH TO OPP HAND
SCALE: 3=1'-0

DEPARTMENT OF THE NAVY NAVAL SEA SYSTEMS COMMAND WASHINGTON, D.C. 20362-5101	SIZE	CAGE CODE	ESWBS	DRAWING NO.	REV
DRAWN	F	53711	803	6397268	A
ISSUED	SCALE: AS SHOWN	MASS		SHEET 15	

DRAWING 803-6397268 SHEET 15 REV A

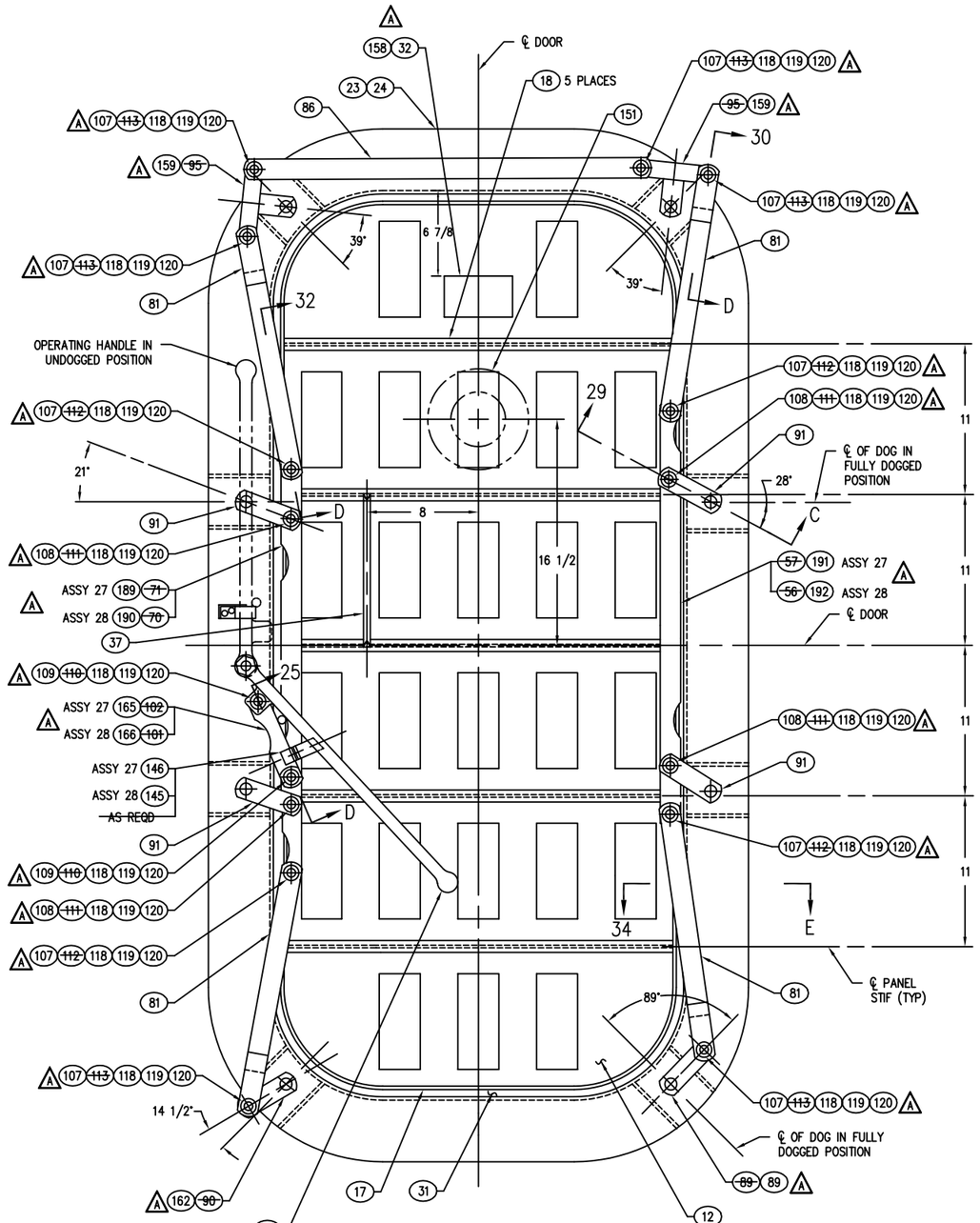

DETAIL 126-A
INSIDE VIEW
LH SHOWN
RH TO OPP HAND
SCALE: 3=1'-0

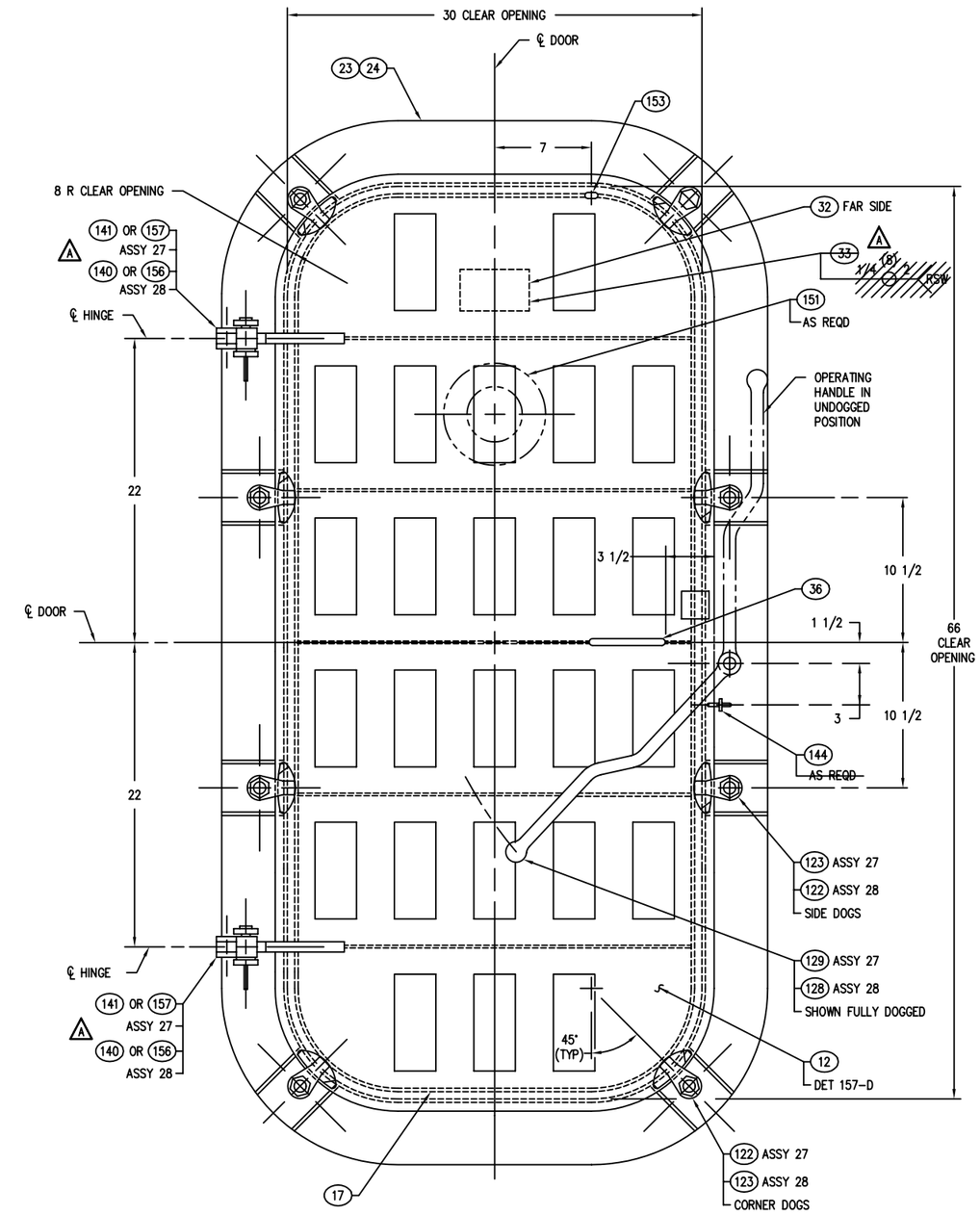

DETAIL 123-A
OUTSIDE VIEW
30 X 66 WT QA DOOR - 8 DOG
ASSEMBLY 27 - LH SHOWN
ASSEMBLY 28 - RH TO OPP HAND
SCALE: 3=1'-0

DEPARTMENT OF THE NAVY NAVAL SEA SYSTEMS COMMAND WASHINGTON, D.C. 20362-5101	SIZE	CAGE CODE	ESWBS	DRAWING NO.	REV
DRAWN	F	53711	803	6397268	A
ISSUED	SCALE: AS SHOWN	MASS		SHEET 16	

DRAWING 803-6397268 SHEET 16 REV A

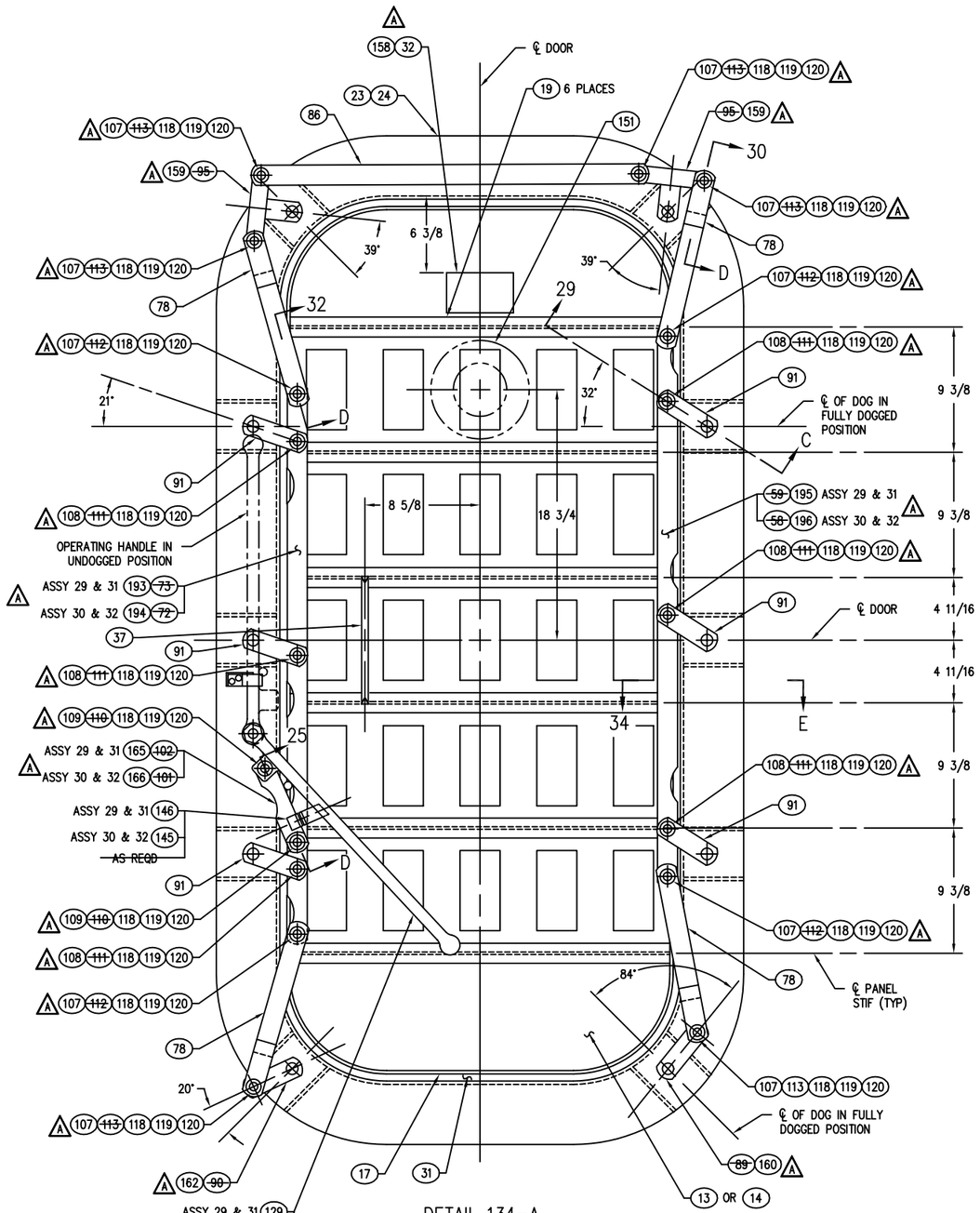

DETAIL 134–A
INSIDE VIEW
LH SHOWN
RH TO OPP HAND
SCALE: 3=1'–0

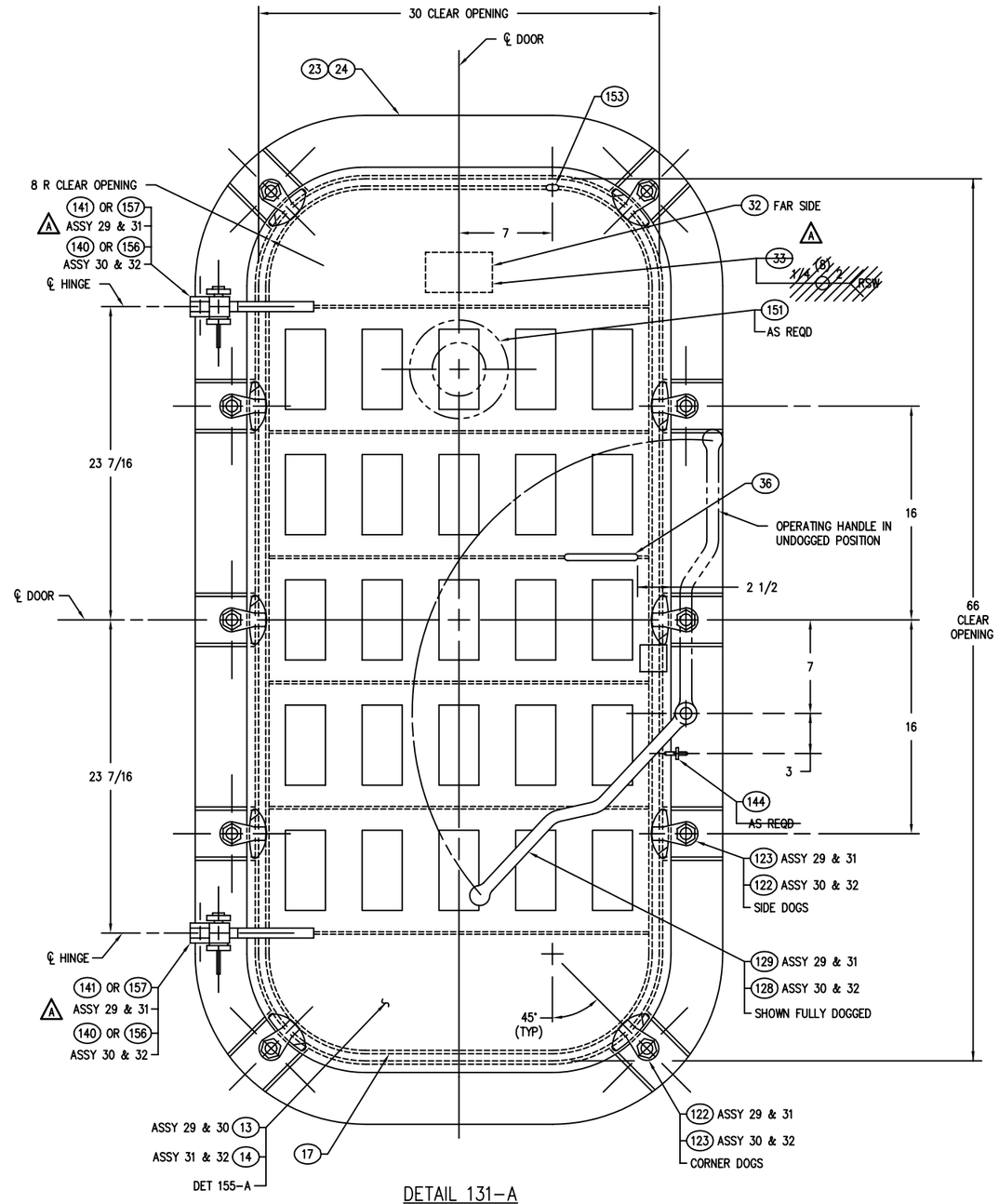

DETAIL 131–A
OUTSIDE VIEW
30 X 66 WT QA DOOR – 10 DOG
ASSEMBLY 29 & 31 – LH SHOWN
ASSEMBLY 30 & 32 – RH TO OPP HAND
SCALE: 3=1'–0

DEPARTMENT OF THE NAVY NAVAL SEA SYSTEMS COMMAND WASHINGTON, D.C. 20362-5101	SIZE	CAGE CODE	ESWBS	DRAWING NO.	REV
DRAWN	F	53711	803	6397268	A
ISSUED	SCALE: AS SHOWN	MASS		SHEET 17	

DRAWING 803-6397268 SHEET 17 REV A

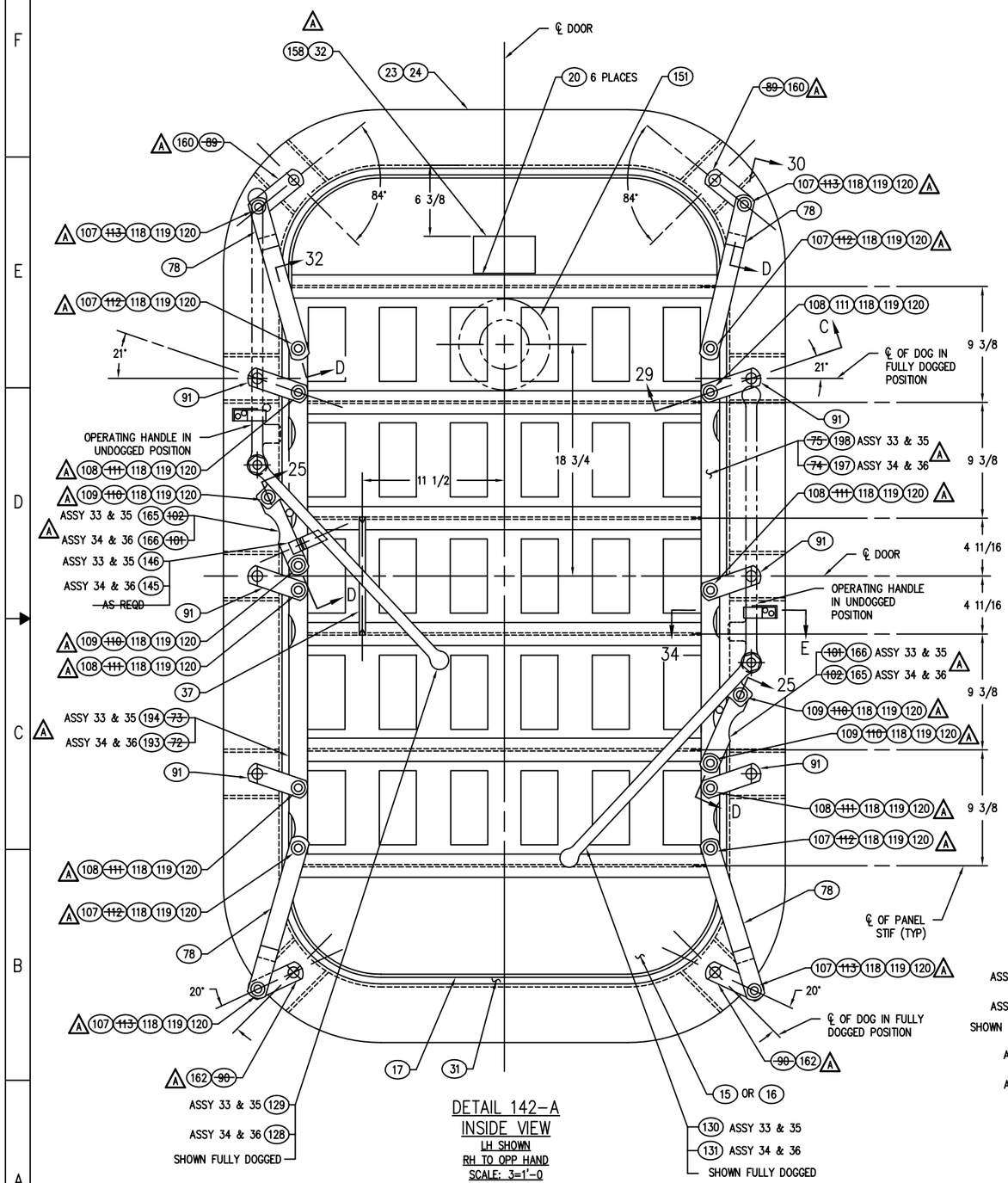

DETAIL 142-A
INSIDE VIEW
LH SHOWN
RH TO OPP HAND
SCALE: 3=1'-0

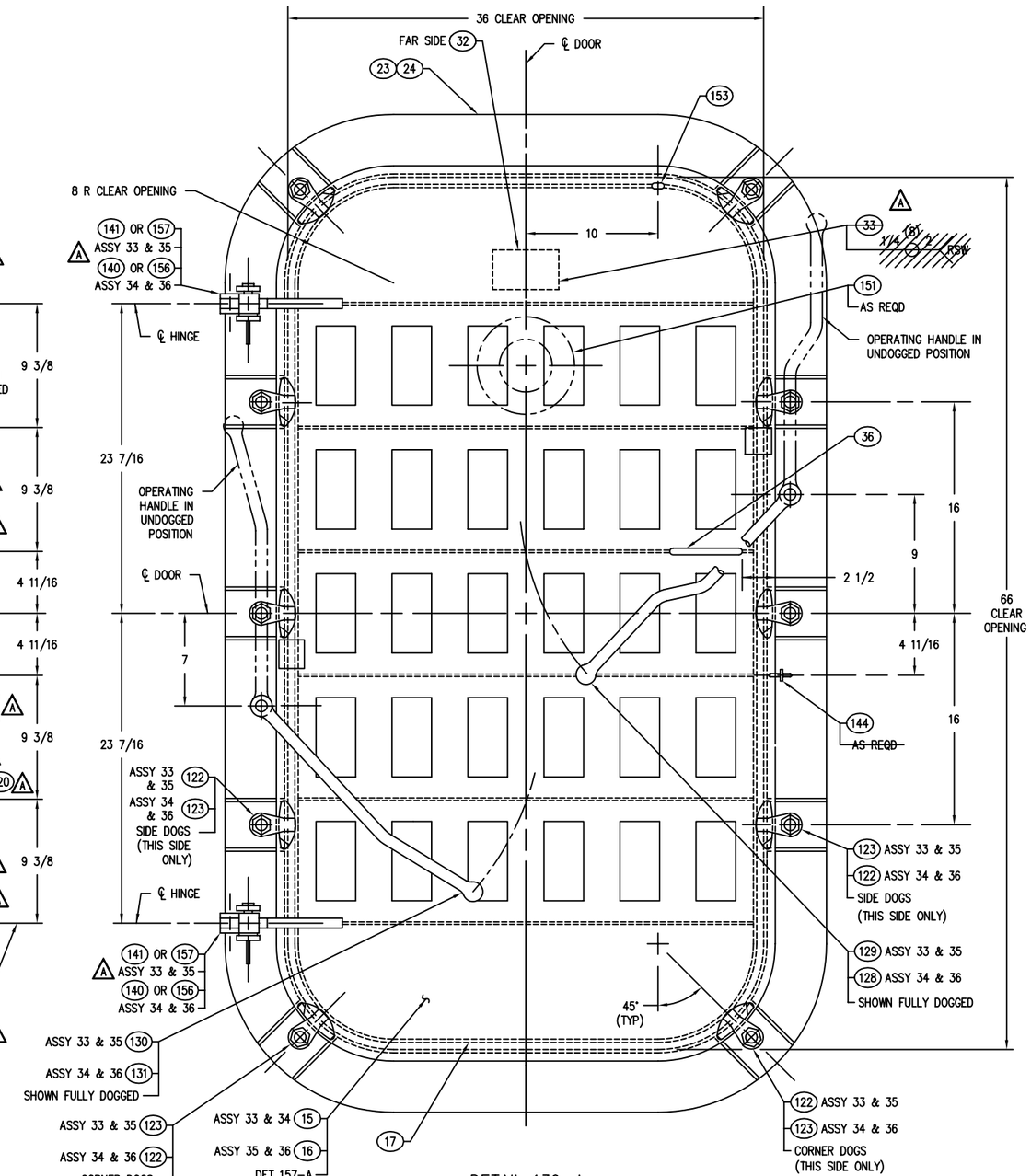

DETAIL 139-A
OUTSIDE VIEW
36 X 66 WT QA DOOR – 10 DOG
ASSEMBLY 33 & 35 – LH SHOWN
ASSEMBLY 34 & 36 – RH TO OPP HAND
SCALE: 3=1'-0

DEPARTMENT OF THE NAVY NAVAL SEA SYSTEMS COMMAND WASHINGTON, D.C. 20362-5101	SIZE	CAGE CODE	ESWBS	DRAWING NO.	REV
DRAWN	F	53711	803	6397268	A
ISSUED	SCALE: AS SHOWN	MASS		SHEET 18	

DRAWING 803-6397268 SHEET 18 REV A

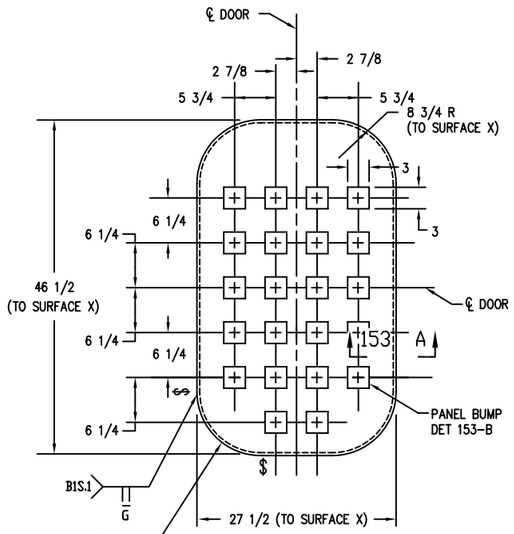

DETAIL 151-D
PANEL 5
SCALE: 1 1/2 =1'-0

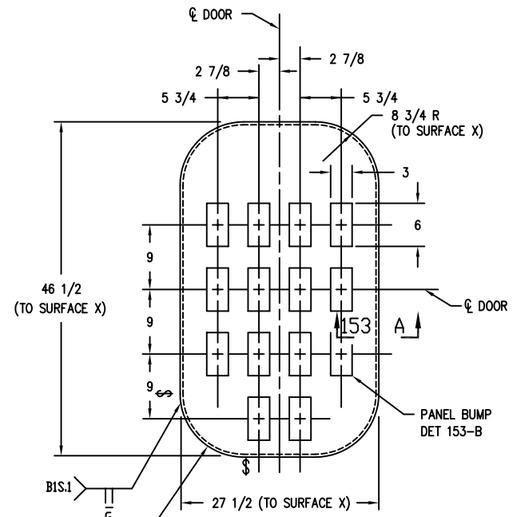

DETAIL 149-D
PANEL 4
SCALE: 1 1/2 =1'-0

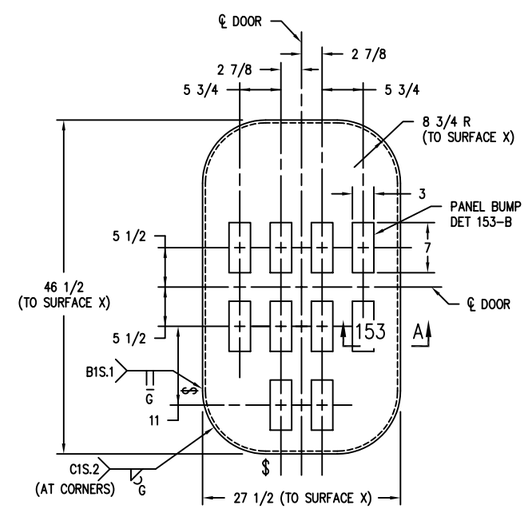

DETAIL 147-D
PANEL 3
SCALE: 1 1/2 =1'-0

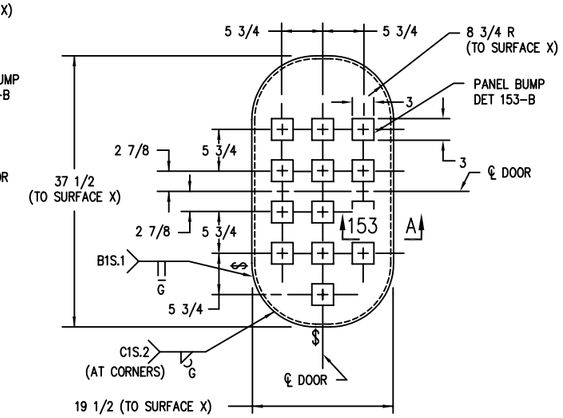

DETAIL 145-D
PANEL 2
SCALE: 1 1/2 =1'-0

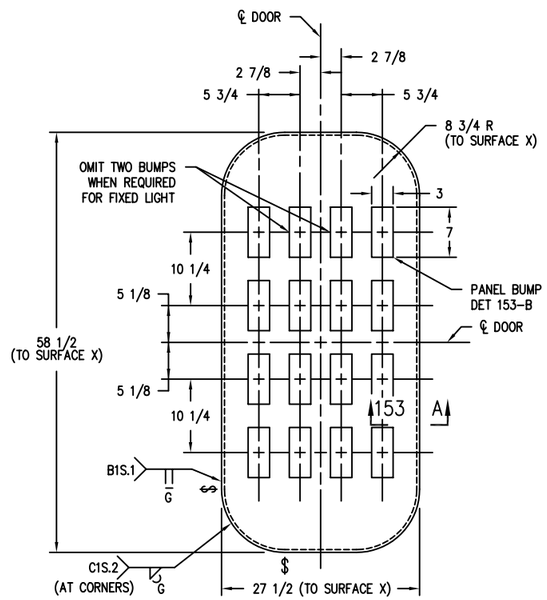

DETAIL 151-A
PANEL 8
SCALE: 1 1/2 =1'-0

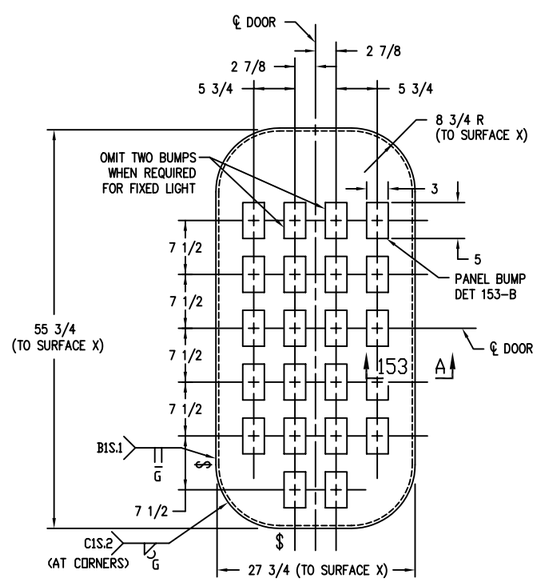

DETAIL 149-A
PANEL 7
SCALE: 1 1/2 =1'-0

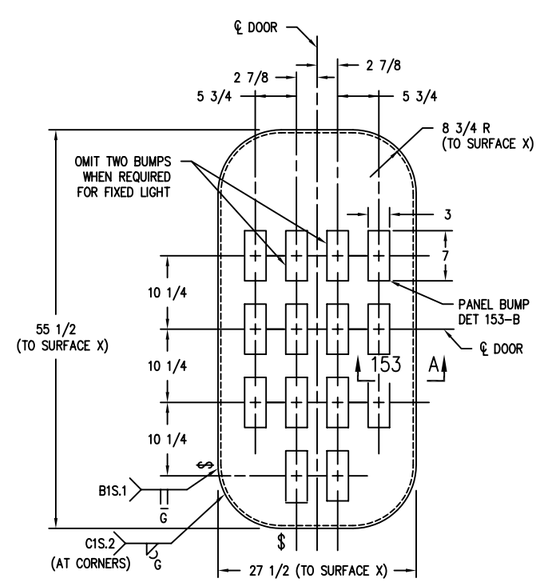

DETAIL 147-A
PANEL 6
SCALE: 1 1/2 =1'-0

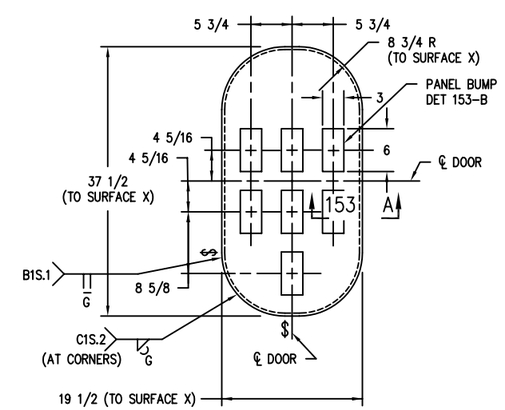

DETAIL 145-B
PANEL 1
SCALE: 1 1/2 =1'-0

DEPARTMENT OF THE NAVY NAVAL SEA SYSTEMS COMMAND WASHINGTON, D.C. 20362-5101	SIZE	CAGE CODE	ESWBS	DRAWING NO.	REV
DRAWN	F	53711	803	6397268	–
ISSUED	SCALE: AS SHOWN	MASS		SHEET 19	

DRAWING 803-6397268 SHEET 19 REV –

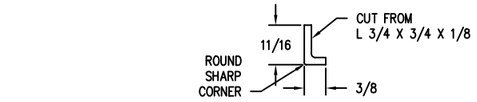

DETAIL 159–F
PANEL FRAME (21) OR (28)
SCALE: 12=1'–0

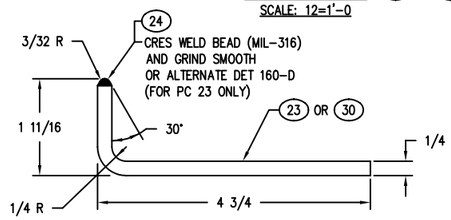

SECTION 159–E
(DETAIL 159–A)
SCALE: 12=1'–0

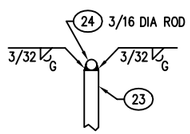

DETAIL 160–D
(SECTION 159–E)
SCALE: 12=1'–0

ASSY	DIM A	DIM B
1–4	18	36
5–10	26	45
11–14	26	54
15–18	26	57
19–26	26	66
27–32	30	66
33–36	36	66

TABLE 159–D
(DETAIL 159–A)

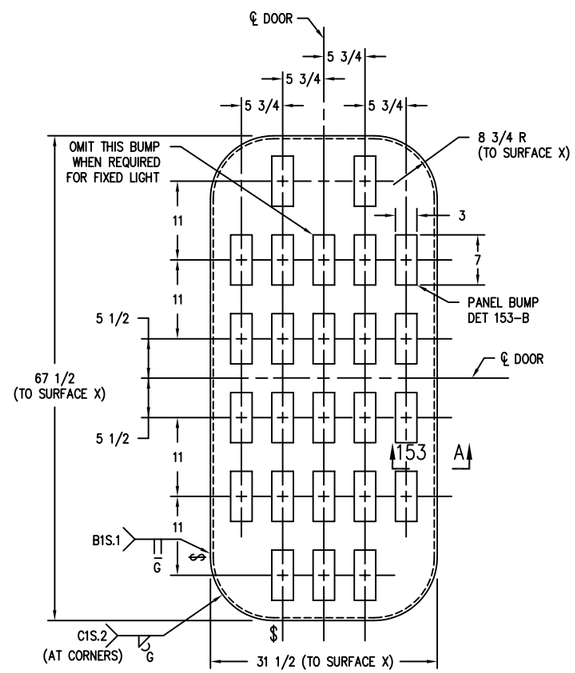

DETAIL 157–D
PANEL (12)
SCALE: 1 1/2=1'–0

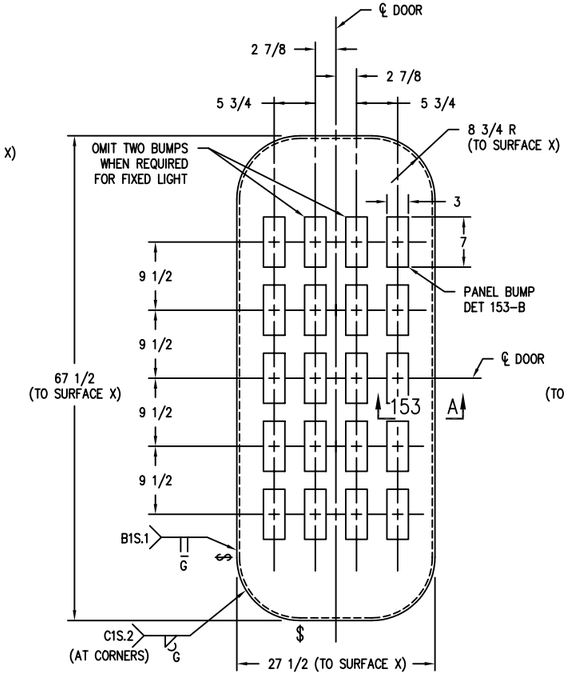

DETAIL 155–D
PANEL (10) OR (11)
SCALE: 1 1/2=1'–0

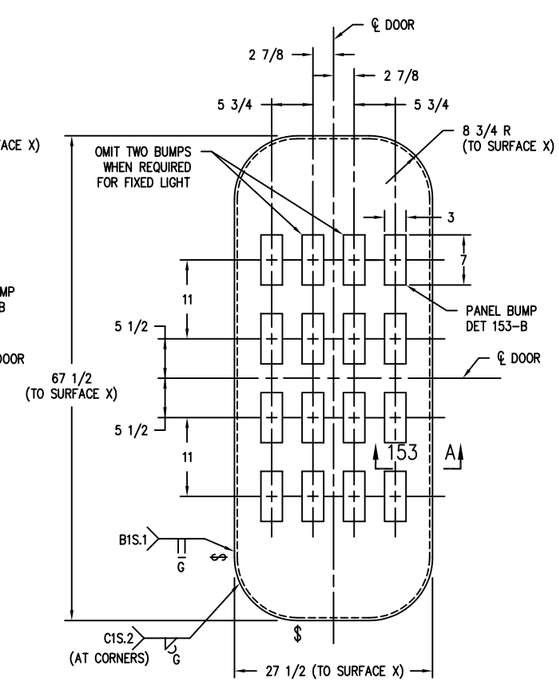

DETAIL 153–D
PANEL (9) OR (25)
SCALE: 1 1/2=1'–0

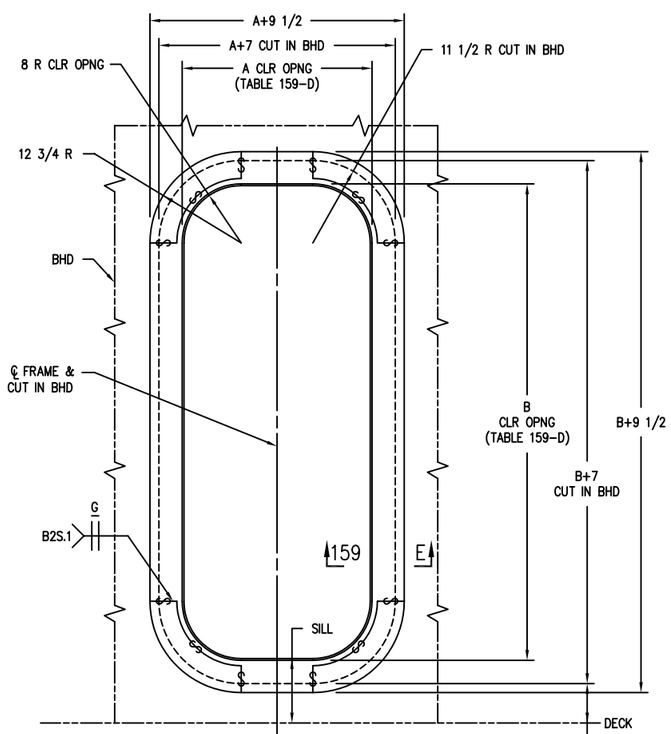

DETAIL 159–A
BULKHEAD FRAME (23) & (24)
SCALE: 1 1/2=1'–0

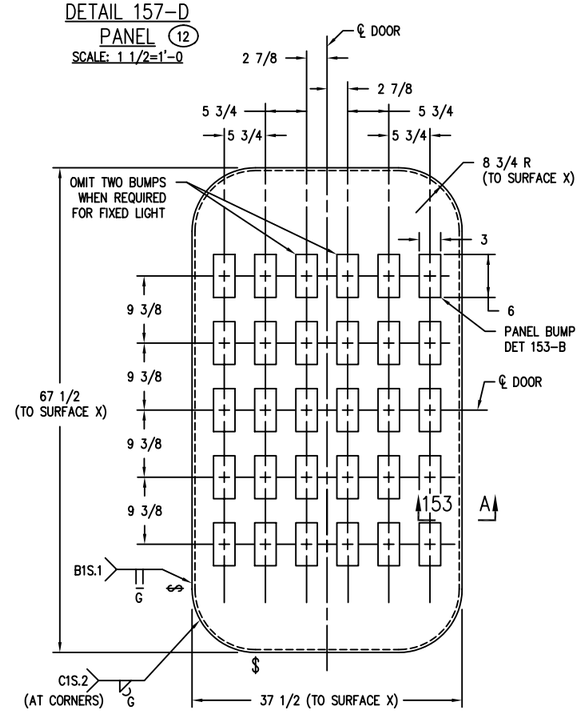

DETAIL 157–A
PANEL (15) OR (16)
SCALE: 1 1/2=1'–0

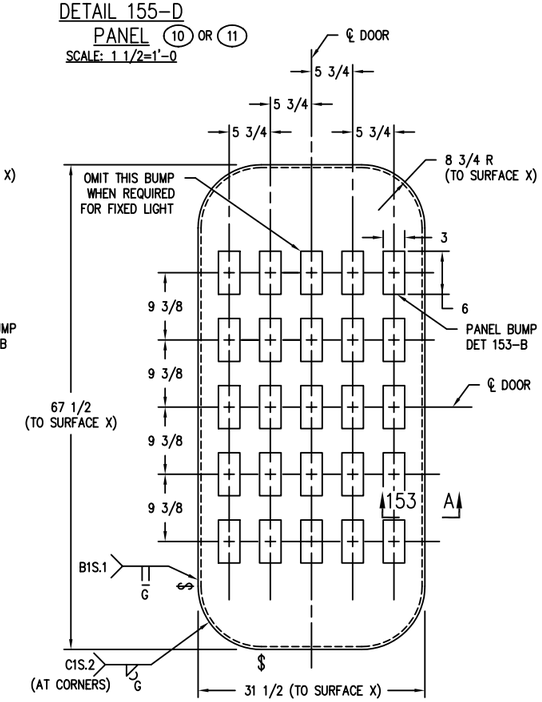

DETAIL 155–A
PANEL (13) OR (14)
SCALE: 1 1/2 =1'–0

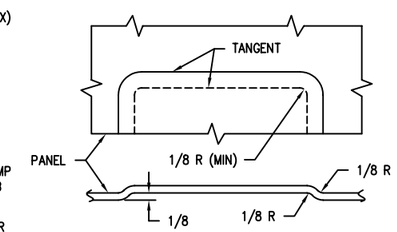

DETAIL 153–B
PANEL BUMP
SCALE: 12=1'–0

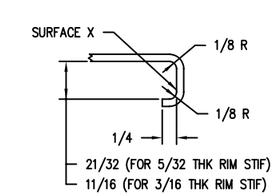

SECTION 153–A
SCALE: 12=1'–0

DEPARTMENT OF THE NAVY NAVAL SEA SYSTEMS COMMAND WASHINGTON, D.C. 20362–5101	SIZE	CAGE CODE	ESWBS	DRAWING NO.	REV
DRAWN	F	53711	803	6397268	A
ISSUED	SCALE: AS SHOWN	MASS		SHEET 20	

DRAWING 803–6397268 SHEET 20 REV A

36	35	34	33	32	31	30	29	28	27	26	25	24	23	22	21	20	19	18	17	16	15	14	13	12	11	10	9	8	7	6	5	4	3	2	1	PC NO.	NAME	REFNO	PC NO.	DET	ZONE	MATERIAL	IDENTIFYING NO. OR SPECIFICATION	ZONE	REMARKS
	1	1																																		198	CONNECTING ROD, ASSY RH	1	V-1	DET 160-A	-	-	-	-	
	1	1																																		197	CONNECTING ROD ASSY LH	1	U-1	DET 160-A	-	-	-	-	
			1	1			1	1																												196	CONNECTING ROD, ASSY RH	1	H-2	DET 165-A	-	-	-	-	
			1	1			1	1																												195	CONNECTING ROD ASSY LH	1	G-2	DET 165-A	-	-	-	-	
	1	1	1	1			1	1																												194	CONNECTING ROD, ASSY RH	1	F-2	DET 167-A	-	-	-	-	
	1	1	1	1			1	1																												193	CONNECTING ROD ASSY LH	1	E-2	DET 167-A	-	-	-	-	
					1				1	1																										192	CONNECTING ROD, ASSY RH	1	L-1	DET 147-A	-	-	-	-	
					1				1	1																										191	CONNECTING ROD ASSY LH	1	K-1	DET 147-A	-	-	-	-	
					1				1	1																										190	CONNECTING ROD, ASSY RH	1	J-1	DET 148-A	-	-	-	-	
					1				1	1																										189	CONNECTING ROD ASSY LH	1	I-1	DET 148-A	-	-	-	-	
																		1				1														188	CONNECTING ROD, ASSY RH	1	Z-1	DET 156-A	-	-	-	-	
																		1				1														187	CONNECTING ROD ASSY LH	1	Y-1	DET 156-A	-	-	-	-	
																		1				1														186	CONNECTING ROD, ASSY RH	1	X-1	DET 158-A	-	-	-	-	
																		1				1														185	CONNECTING ROD ASSY LH	1	W-1	DET 158-A	-	-	-	-	
																				1				1												184	CONNECTING ROD, ASSY RH	1	H-1	DET 150-A	-	-	-	-	
																				1				1												183	CONNECTING ROD ASSY LH	1	G-1	DET 150-A	-	-	-	-	
																				1				1												182	CONNECTING ROD, ASSY RH	1	F-1	DET 152-A	-	-	-	-	
																				1				1												181	CONNECTING ROD ASSY LH	1	E-1	DET 152-A	-	-	-	-	
																										1										180	CONNECTING ROD, ASSY RH	1	D-2	DET 153-A	-	-	-	-	
																										1										179	CONNECTING ROD ASSY LH	1	C-2	DET 153-A	-	-	-	-	
																										1										178	CONNECTING ROD, ASSY RH	1	B-2	DET 155-A	-	-	-	-	
																										1										177	CONNECTING ROD ASSY LH	1	A-2	DET 155-A	-	-	-	-	
																											1									176	CONNECTING ROD, ASSY RH	1	L-2	DET 162-A	-	-	-	-	
																											1									175	CONNECTING ROD ASSY LH	1	K-2	DET 162-A	-	-	-	-	
																											1									174	CONNECTING ROD, ASSY RH	1	J-2	DET 164-A	-	-	-	-	
																											1									173	CONNECTING ROD ASSY LH	1	I-2	DET 164-A	-	-	-	-	
																														1						172	CONNECTING LINK, ASSY RH	1	P-1	DET 145-A	-	-	-	-	
																														1						171	CONNECTING LINK, ASSY LH	1	O-1	DET 145-A	-	-	-	-	
																																1		1		170	CONNECTING LINK, ASSY RH	1	N-1	DET 146-A	-	-	-	-	
																																1		1		169	CONNECTING LINK, ASSY LH	1	M-1	DET 146-A	-	-	-	-	
																		1				1				1	1									168	TOGGLE LINK, OFFSET RH	1	M-2	DET 164-D	-	-	-	-	
																		1				1				1	1									167	TOGGLE LINK, OFFSET ASSY LH	1	N-2	DET 162-D	-	-	-	-	
1	1		1	1	1	1	1	1	1	1			1				1																			166	TOGGLE LINK, ASSY, RH	1	T-1	DET 154-E	-	-	-	-	
1	1		1	1	1	1	1	1	1	1			1				1																			165	TOGGLE LINK, ASSY, LH	1	S-1	DET 154-E	-	-	-	-	
																														1		1		1		164	TOGGLE LINK, ASSY, RH	1	R-1	DET 156-E	-	-	-	-	
																														1		1		1		163	TOGGLE LINK, ASSY, LH	1	Q-1	DET 156-E	-	-	-	-	
2	2		1	1	1	1	1	1	1	1	1	1	1	1	1	1	1	1	1	1	1	1	1	1	1	1	1	1	1	1	1	1	1	1		162	LEVER DOG, ASSY	1	C-1	DET 149-E	-	-	-	-	
																														2		2		2		161	LEVER DOG, ASSY	1	B-1	DET 150-E	-	-	-	-	
2	2		1	1	1	1	1	1	1	1	1	1	1	1	1	1	1	1	1	1	1	1	1	1	1	1	1	1	1	1	1	1	1	1		160	LEVER DOG, ASSY	1	A-1	DET 152-E	-	-	-	-	-
			2	2	2	2	2	2	2	2	2	2	2	2	2	2	2	2	2	2	2	2	2	2	2	2	2	2	2	2	2	2	2	2		159	BELL CRANK, DOG, ASSY	1	D-1	DET 145-E	-	-	-	-	-
1	1		1	1	1	1	1	1	1	1	1	1	1	1	1	1	1	1	1	1	1	1	1	1	1	1	1	1	1	1	1	1	1	1		158	ADHESIVE TAPE	1	-	-	ACRYLIC FOAM	NOTE 10	45-A	-
2	2		2	2																																157C	HINGE ASSY TT LH LOW MOD	1	ASSY TT	DET 135-A	-	-	-	NOTE 2, 11
					2	2		2	2	2	2	2	2	2	2	2	2	2	2	2	2	2	2	2	2	2	2	2	2	2	2	2	2	2	157	157B	HINGE ASSY RR LH HIGH	1	ASSY RR	DET 135-D	-	-	-	NOTE 2, 11
																																				157A	HINGE ASSY PP LH LOW	1	ASSY PP	DET 131-A	-	-	-	NOTE 2, 11
2	2		2	2																																156C	HINGE ASSY SS RH LOW MOD	1	ASSY SS	DET 135-A	-	-	-	NOTE 2, 11
					2	2		2	2	2	2	2	2	2	2	2	2	2	2	2	2	2	2	2	2	2	2	2	2	2	2	2	2	2	156	156B	HINGE ASSY QQ RH HIGH	1	ASSY QQ	DET 135-D	-	-	-	NOTE 2, 11
																																				156A	HINGE ASSY OO RH LOW	1	ASSY OO	DET 131-A	-	-	-	NOTE 2, 11

ASSEMBLY NO.
QUANTITY PER ASSEMBLY

PARTS LIST

DEPARTMENT OF THE NAVY NAVAL SEA SYSTEMS COMMAND WASHINGTON, D.C. 20362-5101	SIZE	CAGE CODE	ESWBS	DRAWING NO.	REV
DRAWN	F	53711	803	6397268	A
ISSUED	SCALE: AS NOTED	MASS		SHEET 21	

DRAWING 803-6397268 SHEET 21 REV A

DOOR ASSEMBLY

ASSY NO.	SIZE	HAND	MAX PRESS	NO.OF DOGS	PANEL THK	ASSY DET	WEIGHT APPROX	DOG ASSY	OPER HAND ASSY	HINGE ASSY	HASP ASSY	FIXED LIGHT	SUPERSEDED DRAWING & ASSY NO.
1–A	18 X 36	L	15	6	.075	34–A	145 LB	A,B	N	PP	CC & GG	NO	805–1400064 254 & 258
1–B	18 X 36	L	15	6	.075	34–A	145 LB	A,B	N	RR	CC & GG	NO	805–1400064 256 & 260
2–A	18 X 36	R	15	6	.075	34–A	145 LB	A,B	M	OO	CC & FF	NO	805–1400064 253 & 257
2–B	18 X 36	R	15	6	.075	34–A	145 LB	A,B	M	QQ	CC & FF	NO	805–1400064 255 & 259
3–A	18 X 36	L	30	6	.120	42–A	160 LB	A,B	N	PP	CC & GG	NO	805–1400064 262 & 266
3–B	18 X 36	L	30	6	.120	42–A	160 LB	A,B	N	RR	CC & GG	NO	805–1400064 264 & 268
4–A	18 X 36	R	30	6	.120	42–A	160 LB	A,B	M	OO	CC & FF	NO	805–1400064 261 & 265
4–B	18 X 36	R	30	6	.120	42–A	160 LB	A,B	M	QQ	CC & FF	NO	805–1400064 263 & 267
5–A	26 X 45	L	10	6	.075	51–A	184 LB	A,B	N	PP	CC & GG	NO	805–1400061 230 & 234
5–B	26 X 45	L	10	6	.075	51–A	184 LB	A,B	N	RR	CC & GG	NO	805–1400061 232 & 236
6–A	26 X 45	R	10	6	.075	51–A	184 LB	A,B	M	OO	CC & FF	NO	805–1400061 229 & 233
6–B	26 X 45	R	10	6	.075	51–A	184 LB	A,B	M	QQ	CC & FF	NO	805–1400061 231 & 235
7–A	26 X 45	L	20	8	.090	59–A	208 LB	A,B,D	L	PP	CC & II	NO	805–1400062 238 & 242
7–B	26 X 45	L	20	8	.090	59–A	208 LB	A,B,D	L	RR	CC & II	NO	805–1400062 240 & 244
8–A	26 X 45	R	20	8	.090	59–A	208 LB	A,B,C	K	OO	CC & HH	NO	805–1400062 237 & 241
8–B	26 X 45	R	20	8	.090	59–A	208 LB	A,B,C	K	QQ	CC & HH	NO	805–1400062 239 & 243
9–A	26 X 45	L	30	10	.120	67–A	206 LB	A,B,D	P	PP	CC & II	NO	805–1400063 246 & 250
9–B	26 X 45	L	30	10	.120	67–A	206 LB	A,B,D	P	RR	CC & II	NO	805–1400063 248 & 252
10–A	26 X 45	R	30	10	.120	67–A	206 LB	A,B,C	O	OO	CC & HH	NO	805–1400063 245 & 249
10–B	26 X 45	R	30	10	.120	67–A	206 LB	A,B,C	O	QQ	CC & HH	NO	805–1400063 247 & 251
11–A	26 X 54	L	15	8	.090	75–A	255 LB	A,B	H	PP	CC & EE	NO	805–1400059 198 & 202
11–B	26 X 54	L	15	8	.090	75–A	255 LB	A,B	H	RR	CC & EE	NO	805–1400059 200 & 204
11–C	26 X 54	L	15	8	.090	75–A	255 LB	A,B	H	PP	CC & EE	YES	805–1400059 206 & 210
11–D	26 X 54	L	15	8	.090	75–A	255 LB	A,B	H	RR	CC & EE	YES	805–1400059 208 & 212
12–A	26 X 54	R	15	8	.090	75–A	255 LB	A,B	G	OO	CC & DD	NO	805–1400059 197 & 201
12–B	26 X 54	R	15	8	.090	75–A	255 LB	A,B	G	QQ	CC & DD	NO	805–1400059 199 & 203
12–C	26 X 54	R	15	8	.090	75–A	255 LB	A,B	G	OO	CC & DD	YES	805–1400059 205 & 209
12–D	26 X 54	R	15	8	.090	75–A	255 LB	A,B	G	QQ	CC & DD	YES	805–1400059 207 & 211
13–A	26 X 54	L	30	10	.120	83–A	295 LB	A,B,D	L	PP	CC & II	NO	805–1400060 214 & 218
13–B	26 X 54	L	30	10	.120	83–A	295 LB	A,B,D	L	RR	CC & II	NO	805–1400060 216 & 220
13–C	26 X 54	L	30	10	.120	83–A	295 LB	A,B,D	L	PP	CC & II	YES	805–1400060 222 & 226
13–D	26 X 54	L	30	10	.120	83–A	295 LB	A,B,D	L	RR	CC & II	YES	805–1400060 224 & 228
14–A	26 X 54	R	30	10	.120	83–A	295 LB	A,B,C	K	OO	CC & HH	NO	805–1400060 213 & 217
14–B	26 X 54	R	30	10	.120	83–A	295 LB	A,B,C	K	QQ	CC & HH	NO	805–1400060 215 & 219
14–C	26 X 54	R	30	10	.120	83–A	295 LB	A,B,C	K	OO	CC & HH	YES	805–1400060 221 & 225
14–D	26 X 54	R	30	10	.120	83–A	295 LB	A,B,C	K	QQ	CC & HH	YES	805–1400060 223 & 227

DOOR ASSEMBLY

ASSY NO.	SIZE	HAND	MAX PRESS	NO.OF DOGS	PANEL THK	ASSY DET	WEIGHT APPROX	DOG ASSY	OPER HAND ASSY	HINGE ASSY	HASP ASSY	FIXED LIGHT	SUPERSEDED DRAWING & ASSY NO.
15–A	26 X 57	L	5	8	.075	91–A	264 LB	A,B	H	PP	CC & EE	NO	805–1400057 150 & 154
15–B	26 X 57	L	5	8	.075	91–A	264 LB	A,B	H	RR	CC & EE	NO	805–1400057 152 & 156
15–C	26 X 57	L	5	8	.075	91–A	264 LB	A,B	H	PP	CC & EE	YES	805–1400057 158 & 162
15–D	26 X 57	L	5	8	.075	91–A	264 LB	A,B	H	RR	CC & EE	YES	805–1400057 160 & 164
16–A	26 X 57	R	5	8	.075	91–A	264 LB	A,B	G	OO	CC & DD	NO	805–1400057 149 & 153
16–B	26 X 57	R	5	8	.075	91–A	264 LB	A,B	G	QQ	CC & DD	NO	805–1400057 151 & 155
16–C	26 X 57	R	5	8	.075	91–A	264 LB	A,B	G	OO	CC & DD	YES	805–1400057 157 & 161
16–D	26 X 57	R	5	8	.075	91–A	264 LB	A,B	G	QQ	CC & DD	YES	805–1400057 159 & 163
17–A	26 X 57	L	12.5	10	.075	99–A	282 LB	A,B,D	L	PP	CC & II	NO	805–1400058 166 & 170
17–B	26 X 57	L	12.5	10	.075	99–A	282 LB	A,B,D	L	RR	CC & II	NO	805–1400058 168 & 172
17–C	26 X 57	L	12.5	10	.075	99–A	282 LB	A,B,D	L	PP	CC & II	YES	805–1400058 174 & 178
17–D	26 X 57	L	12.5	10	.075	99–A	282 LB	A,B,D	L	RR	CC & II	YES	805–1400058 176 & 180
18–A	26 X 57	R	12.5	10	.075	99–A	282 LB	A,B,C	K	OO	CC & HH	NO	805–1400058 165 & 169
18–B	26 X 57	R	12.5	10	.075	99–A	282 LB	A,B,C	K	QQ	CC & HH	NO	805–1400058 167 & 171
18–C	26 X 57	R	12.5	10	.075	99–A	282 LB	A,B,C	K	OO	CC & HH	YES	805–1400058 173 & 177
18–D	26 X 57	R	12.5	10	.075	99–A	282 LB	A,B,C	K	QQ	CC & HH	YES	805–1400058 175 & 179
19–A	26 X 66	L	10	8	.075	107–A	287 LB	A,B	H	PP	CC & EE	NO	805–1400056 134 & 138
19–B	26 X 66	L	10	8	.075	107–A	287 LB	A,B	H	RR	CC & EE	NO	805–1400056 136 & 140
19–C	26 X 66	L	10	8	.075	107–A	287 LB	A,B	H	PP	CC & EE	YES	805–1400056 142 & 146
19–D	26 X 66	L	10	8	.075	107–A	287 LB	A,B	H	RR	CC & EE	YES	805–1400056 144 & 148
20–A	26 X 66	R	10	8	.075	107–A	287 LB	A,B	G	OO	CC & DD	NO	805–1400056 133 & 137
20–B	26 X 66	R	10	8	.075	107–A	287 LB	A,B	G	QQ	CC & DD	NO	805–1400056 135 & 139
20–C	26 X 66	R	10	8	.075	107–A	287 LB	A,B	G	OO	CC & DD	YES	805–1400056 141 & 145
20–D	26 X 66	R	10	8	.075	107–A	287 LB	A,B	G	QQ	CC & DD	YES	805–1400056 143 & 147
21–A	26 X 66	L	10	8	.075	107–A	290 LB	E,F	R	PP	CC & EE	NO	805–1400065 182 & 186
21–B	26 X 66	L	10	8	.075	107–A	290 LB	E,F	R	RR	CC & EE	NO	805–1400065 184 & 188
21–C	26 X 66	L	10	8	.075	107–A	290 LB	E,F	R	PP	CC & EE	YES	805–1400065 190 & 194
21–D	26 X 66	L	10	8	.075	107–A	290 LB	E,F	R	RR	CC & EE	YES	805–1400065 192 & 196
22–A	26 X 66	R	10	8	.075	107–A	290 LB	E,F	Q	OO	CC & DD	NO	805–1400065 181 & 185
22–B	26 X 66	R	10	8	.075	107–A	290 LB	E,F	Q	QQ	CC & DD	NO	805–1400065 183 & 187
22–C	26 X 66	R	10	8	.075	107–A	290 LB	E,F	Q	OO	CC & DD	YES	805–1400065 189 & 193
22–D	26 X 66	R	10	8	.075	107–A	290 LB	E,F	Q	QQ	CC & DD	YES	805–1400065 191 & 195
23–A	26 X 66	L	5/13	10	.120	115–A	309 LB	A,B	H	PP	CC & EE	NO	805–1400050 118 & 122
23–B	26 X 66	L	5/13	10	.120	115–A	309 LB	A,B	H	RR	CC & EE	NO	805–1400050 120 & 124
23–C	26 X 66	L	5/13	10	.120	115–A	309 LB	A,B	H	PP	CC & EE	YES	805–1400050 126 & 130
23–D	26 X 66	L	5/13	10	.120	115–A	309 LB	A,B	H	RR	CC & EE	YES	805–1400050 128 & 132
24–A	26 X 66	R	5/13	10	.120	115–A	309 LB	A,B	G	OO	CC & DD	NO	805–1400050 117 & 121
24–B	26 X 66	R	5/13	10	.120	115–A	309 LB	A,B	G	QQ	CC & DD	NO	805–1400050 119 & 123
24–C	26 X 66	R	5/13	10	.120	115–A	309 LB	A,B	G	OO	CC & DD	YES	805–1400050 125 & 129
24–D	26 X 66	R	5/13	10	.120	115–A	309 LB	A,B	G	QQ	CC & DD	YES	805–1400050 127 & 131
25–A	26 X 66	L	15	10	.075	115–A	326 LB	A,B	H	PP	CC & EE	NO	805–1400050 102 & 106
25–B	26 X 66	L	15	10	.075	115–A	326 LB	A,B	H	RR	CC & EE	NO	805–1400050 104 & 108
25–C	26 X 66	L	15	10	.075	115–A	326 LB	A,B	H	PP	CC & EE	YES	805–1400050 110 & 114
25–D	26 X 66	L	15	10	.075	115–A	326 LB	A,B	H	RR	CC & EE	YES	805–1400050 112 & 116

CONTINUED ON SHEET 23

DEPARTMENT OF THE NAVY
NAVAL SEA SYSTEMS COMMAND
WASHINGTON, D.C. 20362–5101
DRAWN
ISSUED
SIZE F | CAGE CODE 53711 | ESWBS 803 | DRAWING NO. 6397268 | REV A
SCALE: AS NOTED | MASS | SHEET 22

DOG ASSY	
ASSY A	RH REGULAR
ASSY B	LH REGULAR
ASSY C	RH LONG SPINDLE
ASSY D	LH LONG SPINDLE
ASSY E	RH STAINLESS STEEL
ASSY F	LH STAINLESS STEEL

OPERATING HANDLE ASSY	
ASSY G	RH REGULAR
ASSY H	LH REGULAR
ASSY I	RH REGULAR MODIFIED
ASSY J	LH REGULAR MODIFIED
ASSY K	RH LONG SPINDLE
ASSY L	LH LONG SPINDLE
ASSY M	RH LONG SPINDLE
ASSY N	LH LONG SPINDLE
ASSY O	RH LONG SPINDLE–MODIFIED
ASSY P	LH LONG SPINDLE–MODIFIED
~~ASSY Q~~	~~RH STAINLESS STEEL~~
~~ASSY R~~	~~LH STAINLESS STEEL~~

HINGE ASSY (A)	
~~ASSY S~~	~~RH LOW TYPE STL~~
~~ASSY T~~	~~LH LOW TYPE STL~~
~~ASSY U~~	~~RH HIGH TYPE STL~~
~~ASSY V~~	~~LH HIGH TYPE STL~~
~~ASSY W~~	~~RH LOW TYPE MOD STL~~
~~ASSY X~~	~~LH LOW TYPE MOD STL~~
~~ASSY Y~~	~~RH LOW TYPE SST~~
~~ASSY Z~~	~~LH LOW TYPE SST~~
~~ASSY AA~~	~~RH HIGH TYPE SST~~
~~ASSY BB~~	~~LH HIGH TYPE SST~~

HINGE ASSY (A)	
ASSY OO	RH LOW TYPE SST
ASSY PP	LH LOW TYPE SST
ASSY QQ	RH HIGH TYPE SST
ASSY RR	LH HIGH TYPE SST
ASSY SS	RH LOW TYPE MOD SST
ASSY TT	LH LOW TYPE MOD SST

HASP ASSY	
ASSY CC	OUTSIDE TYPE
ASSY DD	INSIDE TYPE RH
ASSY EE	INSIDE TYPE LH
ASSY FF	INSIDE TYPE RH
ASSY GG	INSIDE TYPE LH
ASSY HH	INSIDE TYPE RH
ASSY II	INSIDE TYPE LH

DOOR ASSEMBLY

ASSY NO.	SIZE	HAND	MAX PRESS	NO.OF DOGS	PANEL THK	ASSY DET	WEIGHT APPROX	DOG ASSY	OPER HAND ASSY	HINGE ASSY	HASP ASSY	FIXED LIGHT	SUPERSEDED DRAWING & ASSY NO.
26–A	26 X 66	R	15	10	.075	115–A	326 LB	A,B	G	OO	CC & DD	NO	805–1400050 101 & 105
26–B	26 X 66	R	15	10	.075	115–A	326 LB	A,B	G	QQ	CC & DD	NO	805–1400050 103 & 107
26–C	26 X 66	R	15	10	.075	115–A	326 LB	A,B	G	OO	CC & DD	YES	805–1400050 109 & 113
26–D	26 X 66	R	15	10	.075	115–A	326 LB	A,B	G	QQ	CC & DD	YES	805–1400050 111 & 115
27–A	30 X 66	L	5	8	.075	123–A	301 LB	A,B	H	PP	CC & EE	NO	805–162610 518 & 522
27–B	30 X 66	L	5	8	.075	123–A	301 LB	A,B	H	RR	CC & EE	NO	805–162610 520 & 524
27–C	30 X 66	L	5	8	.075	123–A	301 LB	A,B	H	PP	CC & EE	YES	805–162610 526 & 530
27–D	30 X 66	L	5	8	.075	123–A	301 LB	A,B	H	RR	CC & EE	YES	805–162610 528 & 532
28–A	30 X 66	R	5	8	.075	123–A	301 LB	A,B	G	OO	CC & DD	NO	805–1626510 517 & 521
28–B	30 X 66	R	5	8	.075	123–A	301 LB	A,B	G	QQ	CC & DD	NO	805–1626510 519 & 523
28–C	30 X 66	R	5	8	.075	123–A	301 LB	A,B	G	OO	CC & DD	YES	805–1626510 525 & 529
28–D	30 X 66	R	5	8	.075	123–A	301 LB	A,B	G	QQ	CC & DD	YES	805–1626510 527 & 531
29–A	30 X 66	L	5/13	10	.120	131–A	325 LB	A,B	H	PP	CC & EE	NO	805–1626433 502 & 506
29–B	30 X 66	L	5/13	10	.120	131–A	325 LB	A,B	H	RR	CC & EE	NO	805–1626433 504 & 508
29–C	30 X 66	L	5/13	10	.120	131–A	325 LB	A,B	H	PP	CC & EE	YES	805–1626433 510 & 514
29–D	30 X 66	L	5/13	10	.120	131–A	325 LB	A,B	H	RR	CC & EE	YES	805–1626433 512 & 516
30–A	30 X 66	R	5/13	10	.120	131–A	325 LB	A,B	G	OO	CC & DD	NO	805–1626433 501 & 505
30–B	30 X 66	R	5/13	10	.120	131–A	325 LB	A,B	G	QQ	CC & DD	NO	805–1626433 503 & 507
30–C	30 X 66	R	5/13	10	.120	131–A	325 LB	A,B	G	OO	CC & DD	YES	805–1626433 509 & 513
30–D	30 X 66	R	5/13	10	.120	131–A	325 LB	A,B	G	QQ	CC & DD	YES	805–1626433 511 & 515
31–A	30 X 66	L	15	10	.075	131–A	345 LB	A,B	H	PP	CC & EE	NO	805–1626433 486 & 490
31–B	30 X 66	L	15	10	.075	131–A	345 LB	A,B	H	RR	CC & EE	NO	805–1626433 488 & 492
31–C	30 X 66	L	15	10	.075	131–A	345 LB	A,B	H	PP	CC & EE	YES	805–1626433 494 & 498
31–D	30 X 66	L	15	10	.075	131–A	345 LB	A,B	H	RR	CC & EE	YES	805–1626433 496 & 500
32–A	30 X 66	R	15	10	.075	131–A	345 LB	A,B	G	OO	CC & DD	NO	805–1626433 485 & 489
32–B	30 X 66	R	15	10	.075	131–A	345 LB	A,B	G	QQ	CC & DD	NO	805–1626433 487 & 491
32–C	30 X 66	R	15	10	.075	131–A	345 LB	A,B	G	OO	CC & DD	YES	805–1626433 493 & 497
32–D	30 X 66	R	15	10	.075	131–A	345 LB	A,B	G	QQ	CC & DD	YES	805–1626433 495 & 499
33–A	36 X 66	L	5	10	.075	139–A	350 LB	A,B	I(HINGE)+H(LEVER)	X	CC & EE	NO	805–1340187 534 & 538
33–B	36 X 66	L	5	10	.075	139–A	350 LB	A,B	I(HINGE)+H(LEVER)	V	CC & EE	NO	805–1340187 536 & 540
33–C	36 X 66	L	5	10	.075	139–A	350 LB	A,B	I(HINGE)+H(LEVER)	X	CC & EE	YES	805–1340187 542 & 546
33–D	36 X 66	L	5	10	.075	139–A	350 LB	A,B	I(HINGE)+H(LEVER)	V	CC & EE	YES	805–1340187 544 & 548
34–A	36 X 66	R	5	10	.075	139–A	350 LB	A,B	I(HINGE)+G(LEVER)	W	CC & DD	NO	805–1340187 533 & 537
34–B	36 X 66	R	5	10	.075	139–A	350 LB	A,B	I(HINGE)+G(LEVER)	U	CC & DD	NO	805–1340187 535 & 539
34–C	36 X 66	R	5	10	.075	139–A	350 LB	A,B	I(HINGE)+G(LEVER)	W	CC & DD	YES	805–1340187 541 & 545
34–D	36 X 66	R	5	10	.075	139–A	350 LB	A,B	I(HINGE)+G(LEVER)	U	CC & DD	YES	805–1340187 543 & 547
35–A	36 X 66	L	5/13	10	.120	139–A	370 LB	A,B	I(HINGE)+H(LEVER)	X	CC & EE	NO	805–1340187 550 & 554
35–B	36 X 66	L	5/13	10	.120	139–A	370 LB	A,B	I(HINGE)+H(LEVER)	V	CC & EE	NO	805–1340187 552 & 556
35–C	36 X 66	L	5/13	10	.120	139–A	370 LB	A,B	I(HINGE)+H(LEVER)	X	CC & EE	YES	805–1340187 558 & 562
35–D	36 X 66	L	5/13	10	.120	139–A	370 LB	A,B	I(HINGE)+H(LEVER)	V	CC & EE	YES	805–1340187 560 & 564
36–A	36 X 66	R	5/13	10	.120	139–A	370 LB	A,B	I(HINGE)+G(LEVER)	W	CC & DD	NO	805–1340187 549 & 553
36–B	36 X 66	R	5/13	10	.120	139–A	370 LB	A,B	I(HINGE)+G(LEVER)	U	CC & DD	NO	805–1340187 551 & 555
36–C	36 X 66	R	5/13	10	.120	139–A	370 LB	A,B	I(HINGE)+G(LEVER)	W	CC & DD	YES	805–1340187 557 & 561
36–D	36 X 66	R	5/13	10	.120	139–A	370 LB	A,B	I(HINGE)+G(LEVER)	U	CC & DD	YES	805–1340187 559 & 563

DRAWING 803–6397268 SHEET 23 REV A

DEPARTMENT OF THE NAVY
NAVAL SEA SYSTEMS COMMAND
WASHINGTON, D.C. 20362–5101

DRAWN
ISSUED

SIZE	CAGE CODE	ESWBS	DRAWING NO.	REV
F	53711	803	6397268	A

SCALE: AS NOTED MASS SHEET 23