(CONTINUED ON SHEET 13)

40	39	38	37	36	35	34	33	32	31	30	29	28	27	26	25	24	23	22	21	20	19	18	17	16	15	14	13	12	11	10	9	8	7	6	5	4	3	2	1	PC NO.	NAME	REF NO.	PC NO.	ZONE DET ON	MATERIAL	IDENTIFYING NO. OR SPECIFICATION	ZONE	REMARKS
1	1	1	1	1	1	1	1	1	1	1	1	1	1	1	1	1	1	1	1	1	1	1	1	1	1	1	1	1	1	1	1	1	1	1	1	1	1	1	1	41	BUMPER ASSEMBLY-ASSY N	1	ASSY N	DET 42-E	–	–	–	
1	1	1	1	1	1	1	1	1	1	1	1	1	1	1	1	1	1	1	1	1	1	1	1	1	1	1	1	1	1	1	1	1	1	1	1	1	1	1	1	40	HOOK ASSEMBLY-ASSY M	1	ASSY M	DET 42-E	–	–	10-D	
2	2	2	2	2	2	2	2	2	2	2	2	2	2	2	2	2	2	2	2	2	2	2	2	2	2	2	2	2	2	2	2	2	2	2	2	2	2	2	2	39	PIPE LEVER ASSEMBLY-ASSY L	1	ASSY L	DET 42-A	–	–	–	
AR	AR	AR	AR	AR	AR	AR	AR	AR	AR	AR	AR	AR	AR	AR	AR	AR	AR	AR	AR	AR	AR	AR	AR	AR	AR	AR	AR	AR	AR	AR	AR	AR	AR	AR	AR	AR	AR	AR	AR	38	FIXED LIGHT ASSEMBLY-ASSY K	1	ASSY K	DET 34-D	–	–	34-E	NOTE 2
1	1	1	1	1	1	1	1	1	1	1	1	1	1	1	1	1	1	1	1	1	1	1	1	1	1	1	1	1	1	1	1	1	1	1	1	1	1	1	1	37	37B HASP ASSEMBLY-ASSY J	1	ASSY J	DET 38-A	–	–	9-B	~~NOTE 2~~
																																									37A HASP ASSEMBLY-ASSY I	1	ASSY I	DET 39-E	–	–	9-B	~~NOTE 2~~
2	2	2	2	2	2	2	2	2	2	2	2	2	2	2	2	2	2	2	2	2	2	2	2	2	2	2	2	2	2	2	2	2	2	2	2	2	2	2	2	36	~~36B HINGE ASSEMBLY-ASSY H~~	~~1~~	~~ASSY H~~	~~DET 26-B~~	–	–	~~11-D~~	~~NOTE 2~~
																																									~~36A HINGE ASSEMBLY-ASSY F~~	~~1~~	~~ASSY F~~	~~DET 27-C~~	–	–	~~11-D~~	~~NOTE 2~~
2	2	2	2	2	2	2	2	2	2	2	2	2	2	2	2	2	2	2	2	2	2	2	2	2	2	2	2	2	2	2	2	2	2	2	2	2	2	2	2	35	~~35B HINGE ASSEMBLY-ASSY G~~	~~1~~	~~ASSY G~~	~~DET 26-B~~	–	–	~~11-C~~	~~NOTE 2~~
																																									~~35A HINGE ASSEMBLY-ASSY E~~	~~1~~	~~ASSY E~~	~~DET 27-C~~	–	–	~~11-C~~	~~NOTE 2~~
																					2	1																		34	DOG ASSEMBLY-ASSY D	1	ASSY D	DET 18-D	–	–	26-C 29-B	
																					2	1																		33	DOG ASSEMBLY-ASSY C	1	ASSY C	DET 18-D	–	–	28-C 31-B	
5	5	4	5	5	4	5	4	3	5	5	4	3	6/4	5/4	4	3	3	3	2																					32	DOG ASSEMBLY-ASSY B	1	ASSY B	DET 18-D	–	–	9-D	
5	5	4	5	5	4	5	4	3	5	5	4	3	4/6	4/5	4	3	3	3	2																					31	DOG ASSEMBLY-ASSY A	1	ASSY A	DET 18-D	–	–	11-D	
1	1	1	1	1	1	1	1	1	1	1	1	1	1	1	1	1	1	1	1	1	1	1	1	1	1	1	1	1	1	1	1	1	1	1	1	1	1	1	1	30	~~30B GRAB HANDLE-INSIDE~~	~~1~~	~~67~~	~~47-A~~	~~STL~~	~~ASTM-A36~~	~~9-D~~	~~FOR INTERIOR DOORS NOTE 2~~
																																									30A GRAB HANDLE-INSIDE	1	66	47-A	SST	ASTM-A276 TYPE 316, COND A	9-D	~~FOR EXTERIOR DOORS NOTE 2~~
1	1	1	1	1	1	1	1	1	1	1	1	1	1	1	1	1	1	1	1	1	1	1	1	1	1	1	1	1	1	1	1	1	1	1	1	1	1	1	1	29	~~29B GRAB HANDLE-OUTSIDE~~	~~1~~	~~65~~	~~46-C~~	~~STL~~	~~ASTM-A36~~	~~9-C~~	~~FOR INTERIOR DOORS NOTE 2~~
																																									29A GRAB HANDLE-OUTSIDE	1	64	47-C	SST	ASTM-A276 TYPE 316, COND A	9-C	~~FOR EXTERIOR DOORS NOTE 2~~
~~4~~	~~4~~	~~4~~	~~4~~	~~4~~	~~4~~	~~4~~	~~4~~	~~4~~	~~4~~	~~4~~	~~4~~	~~4~~	~~4~~	~~4~~	~~4~~	~~4~~	~~4~~	~~4~~	~~4~~	~~4~~	~~4~~	~~4~~	~~4~~	~~4~~	~~4~~	~~4~~	~~4~~	~~4~~	~~4~~	~~4~~	~~4~~	~~4~~	~~4~~	~~4~~	~~4~~	~~4~~	~~4~~	~~4~~	~~4~~	~~28~~	~~LABLE PLATE SCREW~~			–	~~CRES~~	~~FF-S-92 TYPE I, STYLE 1B~~	~~10-D~~	~~NO.6-32UNC-2A RDH MSCR, LG = 1/8~~
~~1~~	~~1~~	~~1~~	~~1~~	~~1~~	~~1~~	~~1~~	~~1~~	~~1~~	~~1~~	~~1~~	~~1~~	~~1~~	~~1~~	~~1~~	~~1~~	~~1~~	~~1~~	~~1~~	~~1~~	~~1~~	~~1~~	~~1~~	~~1~~	~~1~~	~~1~~	~~1~~	~~1~~	~~1~~	~~1~~	~~1~~	~~1~~	~~1~~	~~1~~	~~1~~	~~1~~	~~1~~	~~1~~	~~1~~	~~1~~	~~27~~	~~LABEL PLATE BACKING~~	~~1~~	~~63~~	~~45-C~~	~~SST~~	~~ASTM-A240 TYPE 316, COND A~~	~~9-D~~	~~HR, CQ~~
1	1	1	1	1	1	1	1	1	1	1	1	1	1	1	1	1	1	1	1	1	1	1	1	1	1	1	1	1	1	1	1	1	1	1	1	1	1	1	1	26	~~26B LABEL PLATE~~	1	62	45-A	AL ALY	MIL-P-15024 TYPE H	9-D	NOTE 15 REF 2 ~~NOTE 2~~
																																									~~26A LABEL PLATE~~	~~1~~	~~61~~	~~45-A~~	~~CRES~~	~~MIL-P-15024 TYPE A OR B~~	~~9-D~~	~~NOTE 15 REF 2 NOTE 2~~
1	1	1	1	1	1	1	1	1	1	1	1	1	1	1	1	1	1	1	1	1	1	1	1	1	1	1	1	1	1	1	1	1	1	1	1	1	1	1	1	25	~~25C GASKET~~	~~1~~	~~60~~	~~48-D~~	~~RUBBER CLOTH COV~~	~~MIL-G-17927~~	~~10-F~~	~~FIRE ZONE BOUNDARIES NOTE 10 REF 2, NOTE 2~~
																																									~~25B~~ GASKET	1	59	48-C	SILICONE RUBBER	ZZ-R-765 CLASS 3B, GRADE 30	10-F	GENERAL APPLICATION FIREZONE & MISSILE BLAST, NOTE 10
																																									~~25A GASKET~~	~~1~~	~~58~~	~~48-C~~	~~RUBBER~~	~~MIL-R-900~~	~~10-F~~	~~GENERAL APPLICATION NOTE 10 REF 2, NOTE 2~~
1	1	1	1	1	1	1	1	1	1	1	1	1	1	1	1	1	1	1	1	1	1	1	1	1	1	1	1	1	1	1	1	1	1	1	1	1	1	1	1	24	FRAME KNIFE EDGE (TWO ALTERNATES)	–	–	–	SST	ASTM-A276 TYPE 316, COND A	78-C 80-C	
1	1	1	1	1	1	1	1	1	1	1	1	1	1	1	1	1	1	1	1	1	1	1	1	1	1	1	1	1	1	1	1	1	1	1	1	1	1	1	1	23	BHD FRAME	–	–	–	STL	ASTM-A36	9-F 79-C	LG = TO SUIT
AR	AR	AR	AR	AR	AR	AR	AR	AR	AR	AR	AR	AR	AR	AR	AR	AR	AR	AR	AR	AR	AR	AR	AR	AR	AR	AR	AR	AR	AR	AR	AR	AR	AR	AR	AR	AR	AR	AR	AR	22	GASKET RETAINER (ALTERNATE)	–	–	–	STL	ASTM-A36	12-E 14-F	LG = TO SUIT
AR	AR	AR	AR	AR	AR	AR	AR	AR	AR	AR	AR	AR	AR	AR	AR	AR	AR	AR	AR	AR	AR	AR	AR	AR	AR	AR	AR	AR	AR	AR	AR	AR	AR	AR	AR	AR	AR	AR	AR	21	PANEL FRAME (ALTERNATE)	–	–	–	STL	ASTM-A36	14-E 78-D	LG = TO SUIT
																											5	5												20	PANEL STIFFENER (TWO ALTERNATES)	–	–	–	STL	ASTM-A36	27-C 74-A	LG = TO SUIT
6	6		6	6		5			6	6	4				5																									19	PANEL STIFFENER (THREE ALTERNATES)	–	–	–	STL	ASTM-A36	23-B 74-A	LG = TO SUIT
1	1	5	1	1	5		5	5			1	4			1	5	5	5	4																					18	PANEL STIFFENER (THREE ALTERNATES)	–	–	–	STL	ASTM-A36	10-C 74-A	LG = TO SUIT
1	1	1	1	1	1	1	1	1	1	1	1	1	1	1	1	1	1	1	1																					17	RIM STIFFENER (THREE ALTERNATES)	–	–	–	STL	ASTM-A36	10-B 10-F	LG = TO SUIT
1																																								16	PANEL (TWO ALTERNATES)	–	–	–	STL	ASTM-A1011 CS TYPE B	69-B 87-D	HR, CQ, .120 THK
	1																																							15	PANEL (TWO ALTERNATES)	–	–	–	STL	ASTM-A1011 CS TYPE B	69-B 87-D	HR, CQ, .075 THK
		1																																						14	PANEL (TWO ALTERNATES)	–	–	–	STL	ASTM-A1011 CS TYPE B	65-B 85-D	HR, CQ, .075 THK
			1																																					13	PANEL (TWO ALTERNATES)	–	–	–	STL	ASTM-A1011 CS TYPE B	61-B 83-D	HR, CQ, .120 THK
				1																																				12	PANEL (TWO ALTERNATES)	–	–	–	STL	ASTM-A1011 CS TYPE B	61-B 83-D	HR, CQ, .075 THK
					1																																			11	PANEL (TWO ALTERNATES)	–	–	–	STL	ASTM-A1011 CS TYPE B	58-B 82-D	HR, CQ, .075 THK
						1																																		10	PANEL (TWO ALTERNATES)	–	–	–	STL	ASTM-A1011 CS TYPE B	45-B 86-A	HR, CQ, .075 THK
							1	1	1																															9	PANEL (TWO ALTERNATES)	–	–	–	STL	ASTM-A1011 CS TYPE B	42-B 84-A	HR, CQ, .120 THK
										1																														8	PANEL (TWO ALTERNATES)	–	–	–	STL	ASTM-A1011 CS TYPE B	42-B 84-A	HR, CQ, .075 THK
											1																													7	PANEL (TWO ALTERNATES)	–	–	–	STL	ASTM-A1011 CS TYPE B	34-B 83-A	HR, CQ, .075 THK
																					1	1																		6	PANEL (TWO ALTERNATES)	–	–	–	STL	ASTM-A1011 CS TYPE B	26-B 75-D	HR, CQ, .120 THK
																										1														5	PANEL (TWO ALTERNATES)	–	–	–	STL	ASTM-A1011 CS TYPE B	22-B 75-D	HR, CQ, .075 THK
																											1													4	PANEL (TWO ALTERNATES)	–	–	–	STL	ASTM-A1011 CS TYPE B	18-B 73-D	HR, CQ, .075 THK
																													1											3	PANEL (TWO ALTERNATES)	–	–	–	STL	ASTM-A1011 CS TYPE B	14-B 76-B	HR, CQ, .075 THK
																															1									2	PANEL (TWO ALTERNATES)	–	–	–	STL	ASTM-A1011 CS TYPE B	12-B 75-B	HR, CQ, .075 THK
																																							1	1	PANEL (TWO ALTERNATES)	–	–	–	STL	ASTM-A1011 CS TYPE B	9-B 73-B	HR, CQ, .075 THK

ASSEMBLY NO.
QUANTITY PER ASSEMBLY

PARTS LIST ⚠

ASSY NO.	SIZE	HAND	MAX PRESS	NO. OF DOGS	PANEL THK	ASSY DET	WEIGHT APPROX
1	18X36	L	6	4	.075	10-A	117 LB
2	18X36	R	6	4	.075	10-A	117 LB
3	18X36	L	19	6	.075	12-A	129 LB
4	18X36	R	19	6	.075	12-A	129 LB
5	18X36	L	26	6	.075	15-A	131 LB
6	18X36	R	26	6	.075	15-A	131 LB
7	26X45	L	10	6	.075	19-A	158 LB
8	26X45	R	10	6	.075	19-A	158 LB
9	26X45	L	21	8	.075	22-A	187 LB
10	26X45	R	21	8	.075	22-A	187 LB
11	26X45	L	32	10	.120	27-A	215 LB
12	26X45	R	32	10	.120	27-A	215 LB
13	26X45	L	37	12	.120	30-A	226 LB
14	26X45	R	37	12	.120	30-A	226 LB
15	26X54	L	7	6	.075	35-A	194 LB
16	26X54	R	7	6	.075	35-A	194 LB
17	26X54	L	16	8	.075	38-A	205 LB
18	26X54	R	16	8	.075	38-A	205 LB
19	26X54	L	22	10	.075	43-A	221 LB
20	26X54	R	22	10	.075	43-A	221 LB
21	26X54	L	28	10	.120	43-A	240 LB
22	26X54	R	28	10	.120	43-A	240 LB
23	26X57	L	8	6	.075	48-A	203 LB
24	26X57	R	8	6	.075	48-A	203 LB
25	26X57	L	9.5	8	.075	51-A	216 LB
26	26X57	R	9.5	8	.075	51-A	216 LB
27	26X57	L	12.5	10	.075	54-A	233 LB
28	26X57	R	12.5	10	.075	54-A	233 LB
29	26X66	L	10	8	.075	59-A	231 LB
30	26X66	R	10	8	.075	59-A	231 LB
31	26X66	L	15	10	.075	62-A	248 LB
32	26X66	R	15	10	.075	62-A	248 LB
33	26X66	L	5/13	10	.120	62-A	271 LB
34	26X66	R	5/13	10	.120	62-A	271 LB
35	30X66	L	5	8	.075	67-A	244 LB
36	30X66	R	5	8	.075	67-A	244 LB
37	30X66	L	15	10	.075	70-A	263 LB
38	30X66	R	15	10	.075	70-A	263 LB
39	30X66	L	5/13	10	.120	70-A	290 LB
40	30X66	R	5/13	10	.120	70-A	290 LB

⚠ SEE SHEET 12 FOR ASSY TABLES

ZONE	REV	REVISIONS DESCRIPTION	DATE	APPROVED
1-A	A	DRAWING COMPLETELY REDRAWN.		
		ADDED NOTE "FOR NEW CONSTRUCTION AND DOOR REPLACEMENT ONLY".		
1-E		DELETED 10 AND 15 FROM GENL NOTE 1.		
2-D		DELETED GENL NOTE 2.D, 2.E AND 2.F. CHANGED GENL NOTE 2.G. FROM GASKET TO INTERIOR OR EXTERIOR.		
3-D		RELOCATED ASSY TABLES TO SHEET 12.		
3-F		DELETED DOOR ASSY TABLE.		

(CONTINUED ON SHEET 13)

CAD MAINTAINED, CHANGES SHALL BE INCORPORATED BY THE DESIGN ACTIVITY.

GENERAL NOTES: ⚠

1. SEE NOTES 1, 3–6, 8, 9, ~~10~~, 13, 14, ~~15~~, 20, 22, 36, 39–42, 47, 54, 57–60 & 63 ON REF 2 FOR ADDITIONAL APPLICABLE NOTES.
2. ORDERING DATA :
   WHEN THIS DRAWING IS ISSUED FOR MANUFACTURE, THE FOLLOWING MUST BE SPECIFIED WHEN APPLICABLE:
   A. DRAWING TITLE, NUMBER, REVISION LETTER & ASSEMBLY NO.
   B. WITH OR WITHOUT FIXED LIGHT
   C. HINGE ASSY
   ⚠ ~~D. HASP ASSY~~
   ~~E. GRAB HANDLE~~
   ~~F. LABEL PLATE~~
   G. INTERIOR OR EXTERIOR
   H. CORROSION CONTROL SURFACE FINISH. (FOR EXTERIOR OR INTERIOR INSTALLATION, SEE NOTE 47 REF 2).
3. THE DOORS ON THIS DRAWING ARE DESIGNED TO THE FOLLOWING REQUIREMENTS:
   A. GRADE A SHOCK (CLOSED & DOGGED)
   B. MAXIMUM PRESSURE; SEE TABLE OF DOOR ASSEMBLIES AND NOTE 41 ON REF 2.
4. DOOR ASSEMBLIES 33, 34, 39 & 40 ARE DESIGNED FOR 5 PSI MAXIMUM INTERNAL PRESSURE & 13 PSI MAXIMUM EXTERNAL PRESSURE. SEE NOTE 60 ON REF 2.
5. DOORS ON THIS DRAWING ARE DESIGNED FOR INTERIOR AND EXTERIOR USE. SEE NOTE 47 ON REF 2.
6. DOORS FABRICATED IN ACCORDANCE WITH THIS DRAWING ARE GRADE A SHOCK APPROVED BASED ON TESTS OF DOOR ASSEMBLIES 3, 9, 17 & 29 CONDUCTED BY THE WEST COAST SHOCK FACILITY, HUNTERS POINT NAVAL SHIPYARD, SAN FRANCISCO, CALIFORNIA AS REPORTED BY HUNTERS POINT NAVAL SHIPYARD TECHNICAL REPORT NO. 10–70 "SHOCK TEST OF SHIPBOARD CLOSURES FSP ITEM NO. 196" OF MAY 1971.
7. HINGES SHALL BE ALIGNED TO PREVENT BINDING AND TO INSURE FREE SEATING OF GASKET ON KNIFE EDGE.
8. DOOR RIM & BHD FRAME KNIFE EDGE SHALL BE IN A PLANE PARALLEL TO EACH OTHER WITHIN A 1/16 INCH MAXIMUM FLATNESS TOLERANCE ZONE WHEN IN A FREE STATE. SEE DETAIL 10–E.

(CONTINUED ON SHEET 13)

ABBREVIATIONS

AL	ALUMINUM
ALY	ALLOY
AR	AS REQUIRED
CQ	COMMERCIAL QUALITY
CRES	CORROSION RESISTANT STEEL
HR	HOT ROLLED
MSCR	MACHINE SCREW
RDH	ROUNDHEAD
SST	STAINLESS STEEL
STL	STEEL

DIMENSIONAL TOLERANCES UNLESS OTHERWISE SPECIFIED

MACHINED	DEC	FRAC	GEOMETRIC (WHERE IND) SYM	GEOMETRY	TOL
UNDER 6	±0.010	±1/64		FLAT & STR	AS NOTED
6 TO 24	±0.020	±1/32	⊥	PERPENDICULAR	AS NOTED
OVER 24	±0.030	±1/16	//	PARALLELISM	AS NOTED
DIM ARE IN INCHES			◎	CONCENTRICITY	AS NOTED
FILLETS & RADII TO BE ± 1/32			SYM	IN ACCORDANCE WITH	
TOL ON ANGLES ± 0^30'			ANSI Y14.5		

	SIGNATURE	DATE	
PREPARED	J.T. BAILEY	12/28/87	DEPARTMENT OF THE NAVY — WASHINGTON, D.C. 20362-5101
CHECKED	P.R. HEMLER	2/18/88	NAVAL SEA SYSTEMS COMMAND
IND ENGR	J. LOCKSTAMPFOR	2/23/88	
NAVY APPROVAL			DOORS WATERTIGHT, INDIVIDUALLY DOGGED ARRANGEMENT
PROJ ENGR	T. COSTANTINO	2/25/88	
BR. HD	J. TURNER	2/25/88	
DIV. DIR	M. PETZ	2/25/88	
SUBCOMP DIR	D.O. NEUMANN	2/25/88	
APPD FOR COMNAVSEA	D.O. NEUMANN	DATE 2/25/88	

SIZE	CAGE CODE	ESWBS	DRAWING NO.	REV
F	53711	803	6397261	A

SCALE: NONE | MASS AS LISTED | SHEET 1 OF 13

NO.	TITLE	CAGE CODE	DWG NO.
2	DOORS, HATCHES & SCUTTLES GENERAL NOTES	80064	803–2226372
1	DOORS, WT, INDIVIDUALLY DOGGED SUB–ASSEMBLIES & DETAILS	53711	803–6397262

REFERENCES

13	12	11	10	9	8	7	6	5	4	3	2	1	SH	REVISION STATUS OF SHEETS
A	A	–	–	A	A	A	A	A	A	A	A	A	REV	

DISTRIBUTION : APPROVED FOR PUBLIC RELEASE: DISTRIBUTION IS UNLIMITED.

SUPERSEDES DWG NO. 805–1400066, 1400069, 1400070 1400071, 1400072, 1400073, 1623052, 1623053 & 1626357

FOR NEW CONSTRUCTION AND DOOR REPLACEMENT ONLY ⚠

STANDARD DRAWING

DRAWING 803–6397261 SHEET 1 REV A

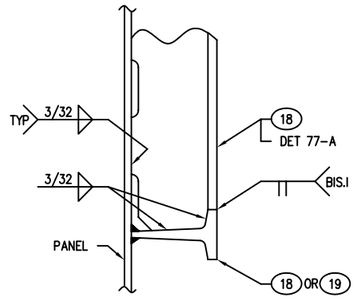

DETAIL 16-E
SCALE: FULL

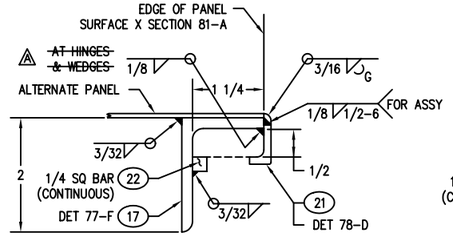

DETAIL 14-E
ALTERNATE EDGE SECTION
(DETAIL 10-E)
SCALE: FULL

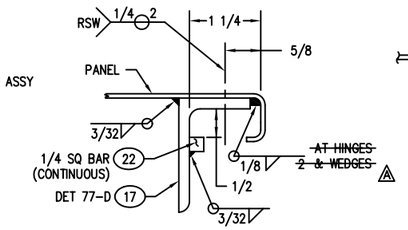

DETAIL 12-E
ALTERNATE EDGE SECTION
(DETAIL 10-E)
SCALE: FULL

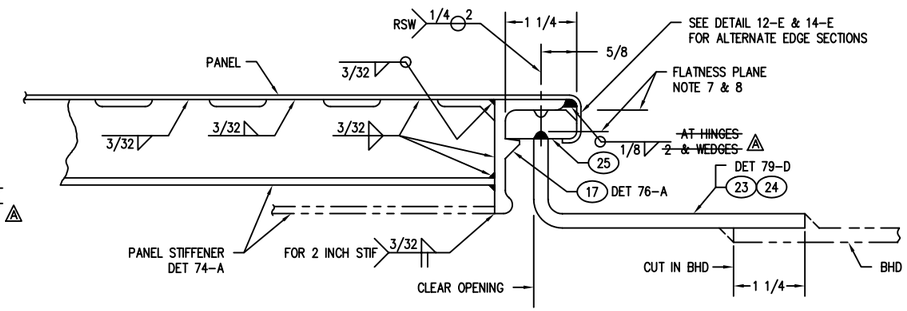

DETAIL 10-E
TYPICAL EDGE SECTION
SCALE: FULL

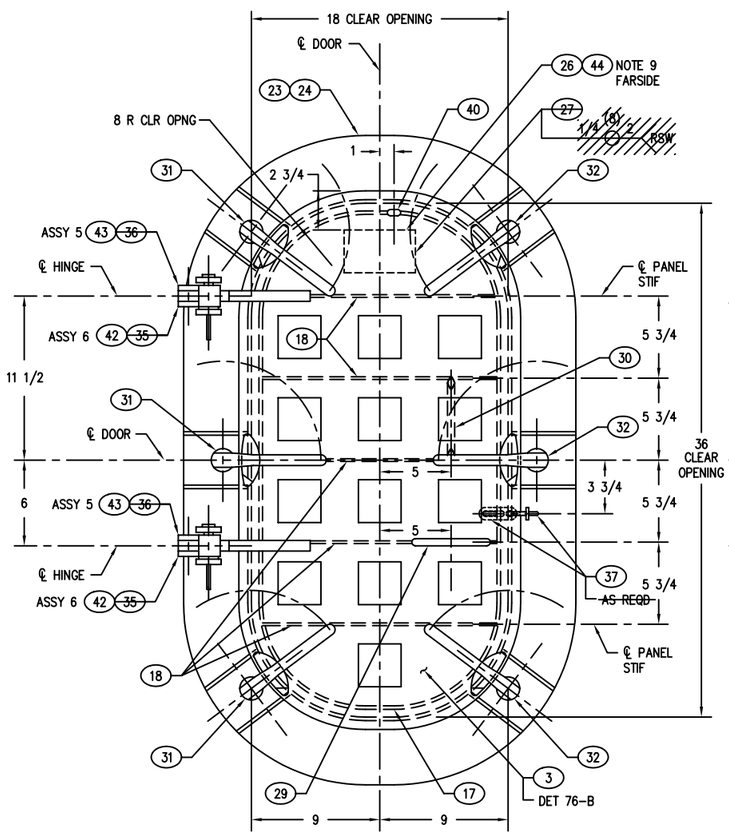

DETAIL 15-A
OUTSIDE VIEW
18 X 36 WT DOOR – 6 DOG
ASSEMBLY 5 – LH SHOWN
ASSEMBLY 6 – RH TO OPP HAND
SCALE: 1/4

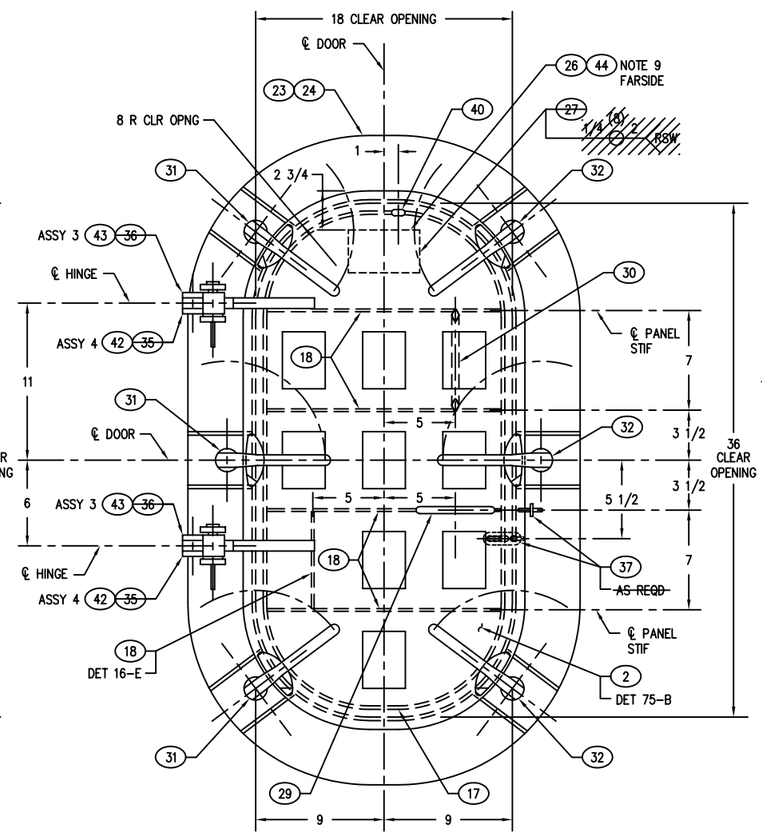

DETAIL 12-A
OUTSIDE VIEW
18 X 36 WT DOOR – 6 DOG
ASSEMBLY 3 – LH SHOWN
ASSEMBLY 4 – RH TO OPP HAND
SCALE: 1/4

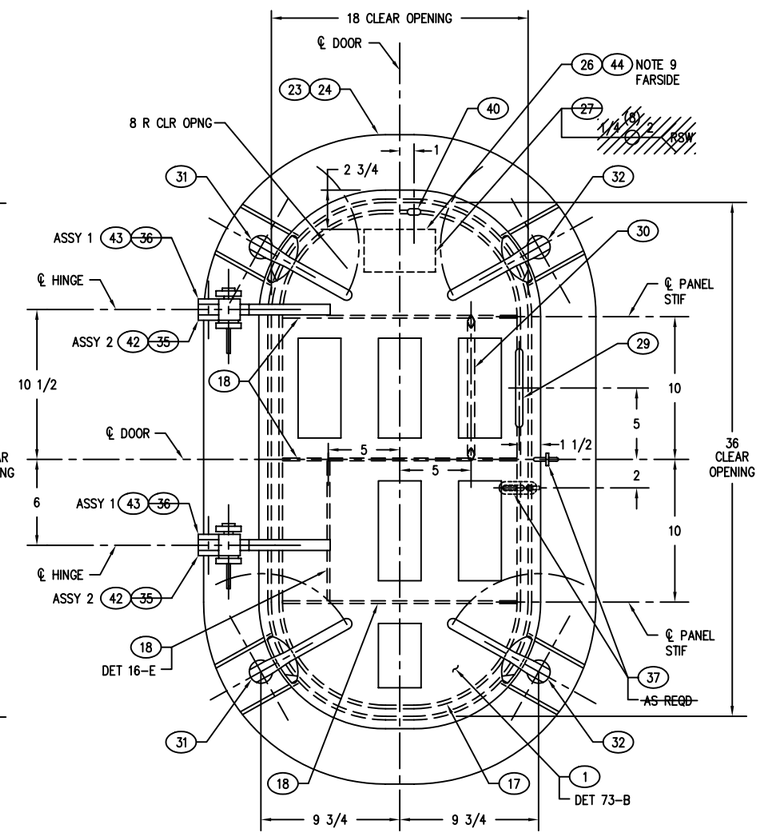

DETAIL 10-A
OUTSIDE VIEW
18 X 36 WT DOOR – 4 DOG
ASSEMBLY 1 – LH SHOWN
ASSEMBLY 2 – RH TO OPP HAND
SCALE: 1/4

DEPARTMENT OF THE NAVY NAVAL SEA SYSTEMS COMMAND WASHINGTON, D.C. 20362-5101	SIZE	CAGE CODE	ESWBS	DRAWING NO.	REV
DRAWN	F	53711	803	6397261	A
ISSUED	SCALE: AS SHOWN	MASS		SHEET 2	

DRAWING 803-6397261 SHEET 2 REV A

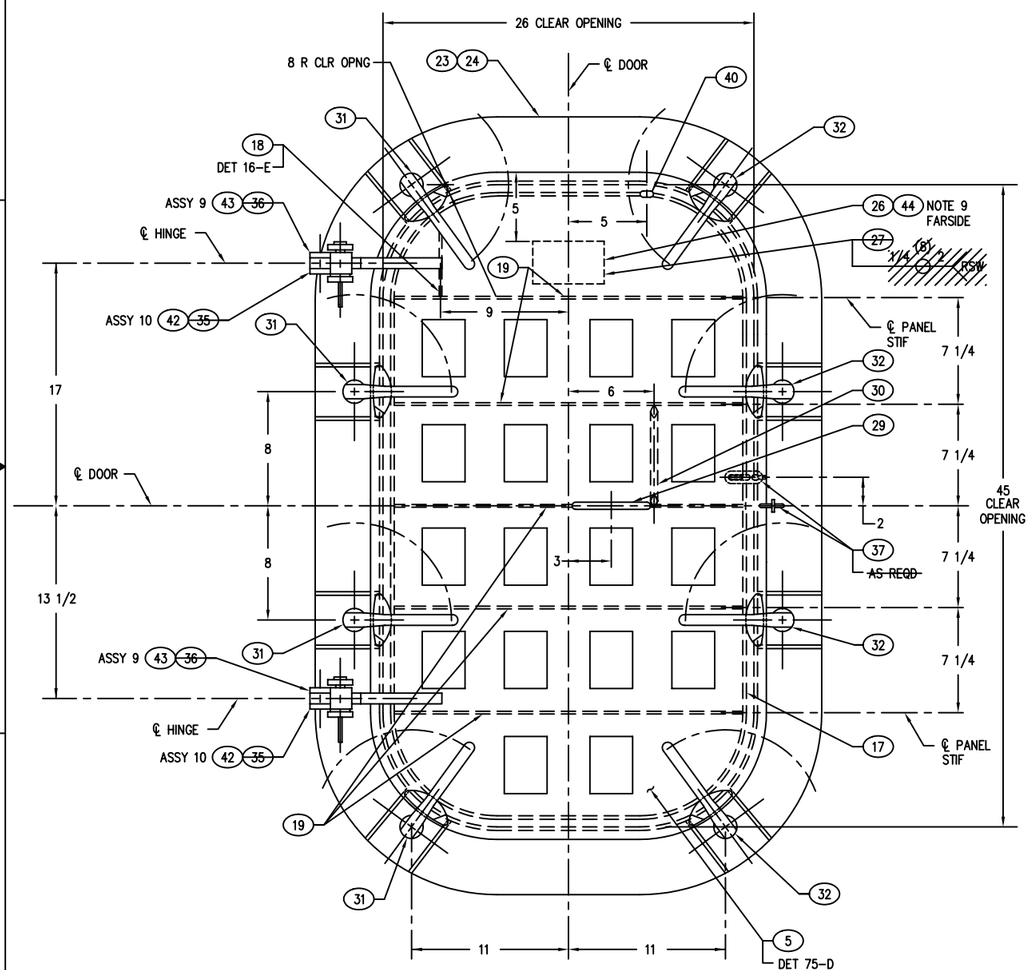

DETAIL 22-A (A)
OUTSIDE VIEW
26 X 45 WT DOOR – 8 DOG
ASSEMBLY 9 – LH SHOWN
ASSEMBLY 10 – RH TO OPP HAND
SCALE: 1/4

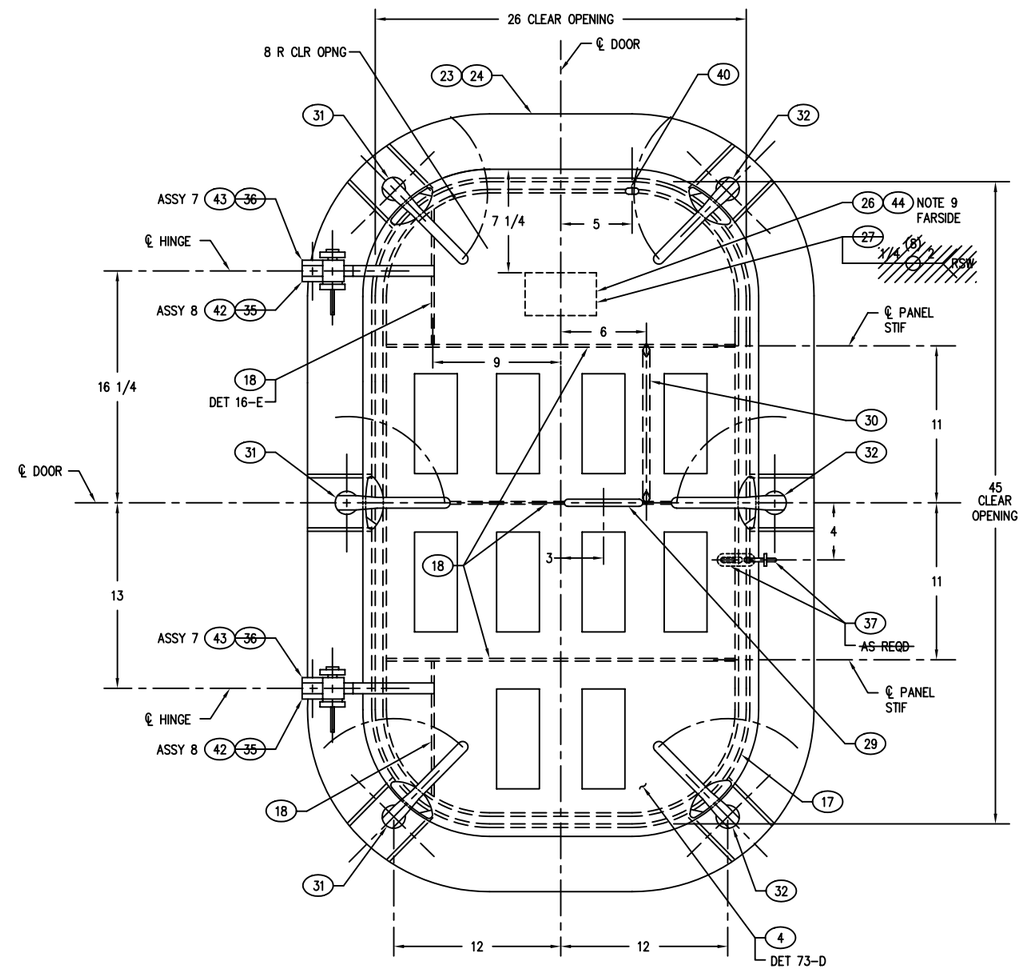

DETAIL 19-A (A)
OUTSIDE VIEW
26 X 45 WT DOOR – 6 DOG
ASSEMBLY 7 – LH SHOWN
ASSEMBLY 8 – RH TO OPP HAND
SCALE: 1/4

DEPARTMENT OF THE NAVY NAVAL SEA SYSTEMS COMMAND WASHINGTON, D.C. 20362-5101	SIZE	CAGE CODE	ESWBS	DRAWING NO.	REV
DRAWN	F	53711	803	6397261	A
ISSUED	SCALE: AS SHOWN	MASS		SHEET 3	

DRAWING 803-6397261 SHEET 3 REV A

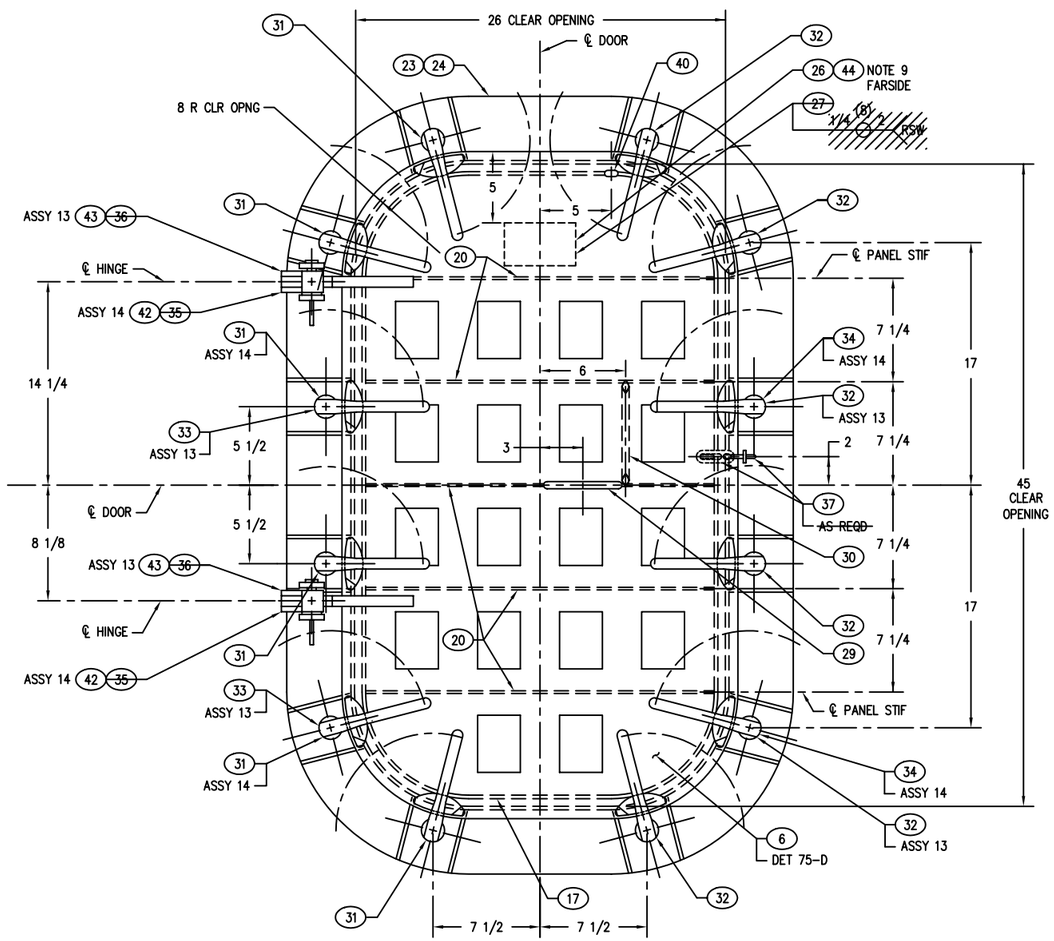

DETAIL 30-A △A
OUTSIDE VIEW
26 X 45 WT DOOR – 12 DOG
ASSEMBLY 13 – LH SHOWN
ASSEMBLY 14 – RH TO OPP HAND
SCALE: 1/4

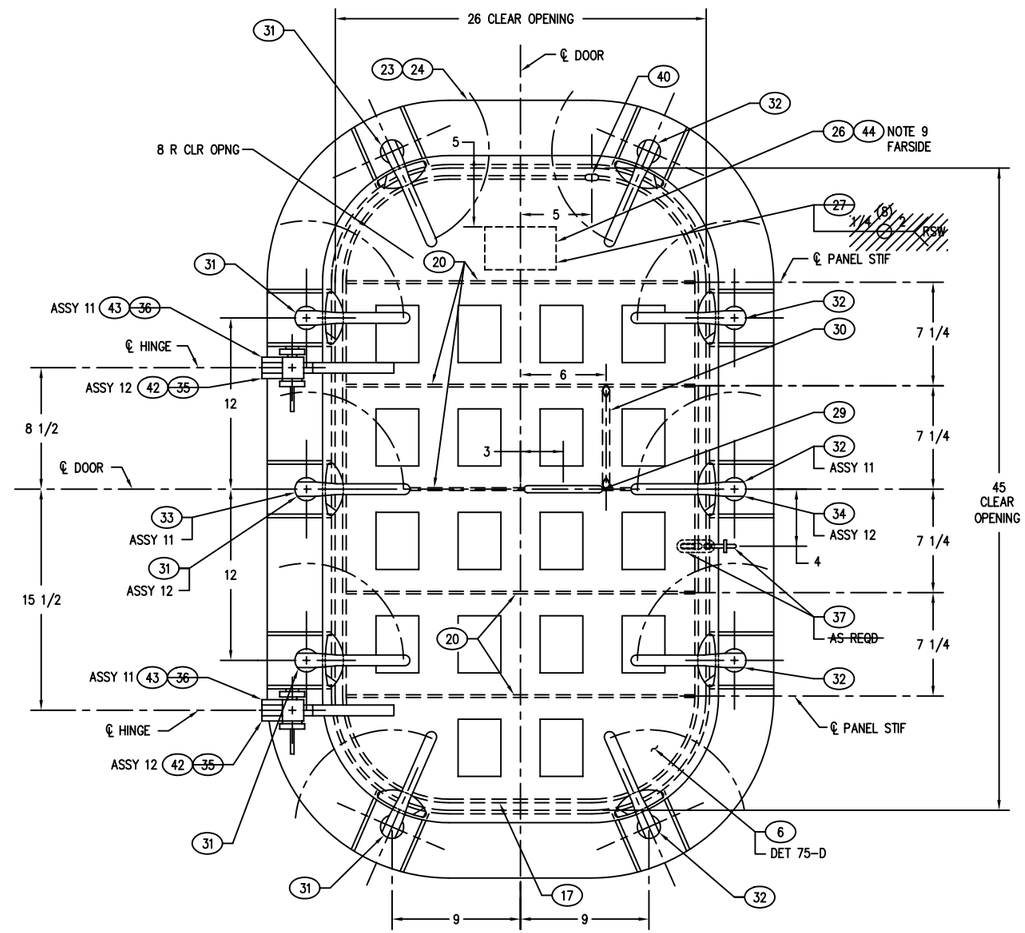

DETAIL 27-A △A
OUTSIDE VIEW
26 X 45 WT DOOR – 10 DOG
ASSEMBLY 11 – LH SHOWN
ASSEMBLY 12 – RH TO OPP HAND
SCALE: 1/4

DEPARTMENT OF THE NAVY NAVAL SEA SYSTEMS COMMAND WASHINGTON, D.C. 20362-5101	SIZE	CAGE CODE	ESWBS	DRAWING NO.	REV
DRAWN	F	53711	803	6397261	A
ISSUED	SCALE: AS SHOWN	MASS		SHEET 4	

DRAWING 803-6397261 SHEET 4 REV A

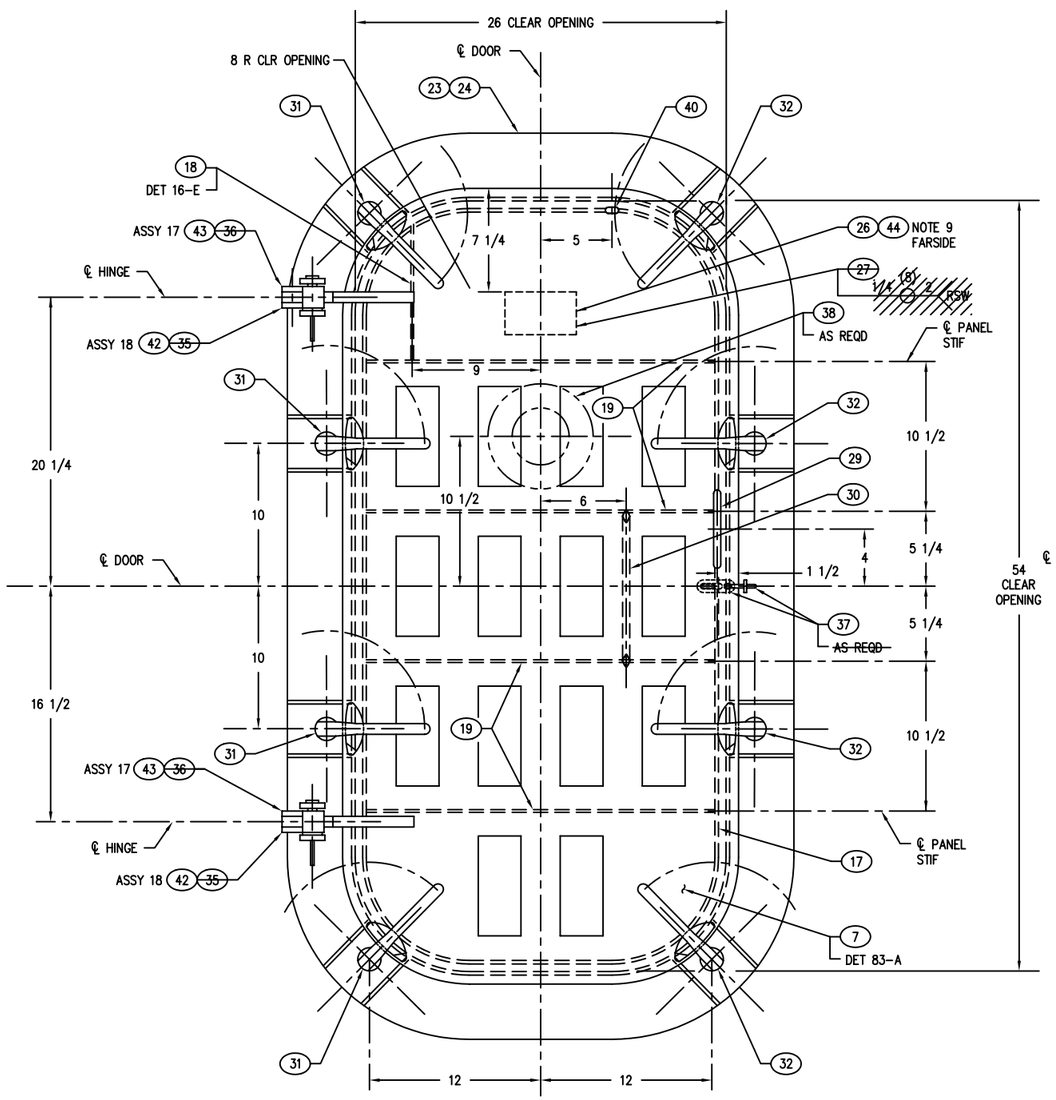

DETAIL 38-A △A
OUTSIDE VIEW
26 X 54 WT DOOR – 8 DOG
ASSEMBLY 17 – LH SHOWN
ASSEMBLY 18 – RH TO OPP HAND
SCALE: 1/4

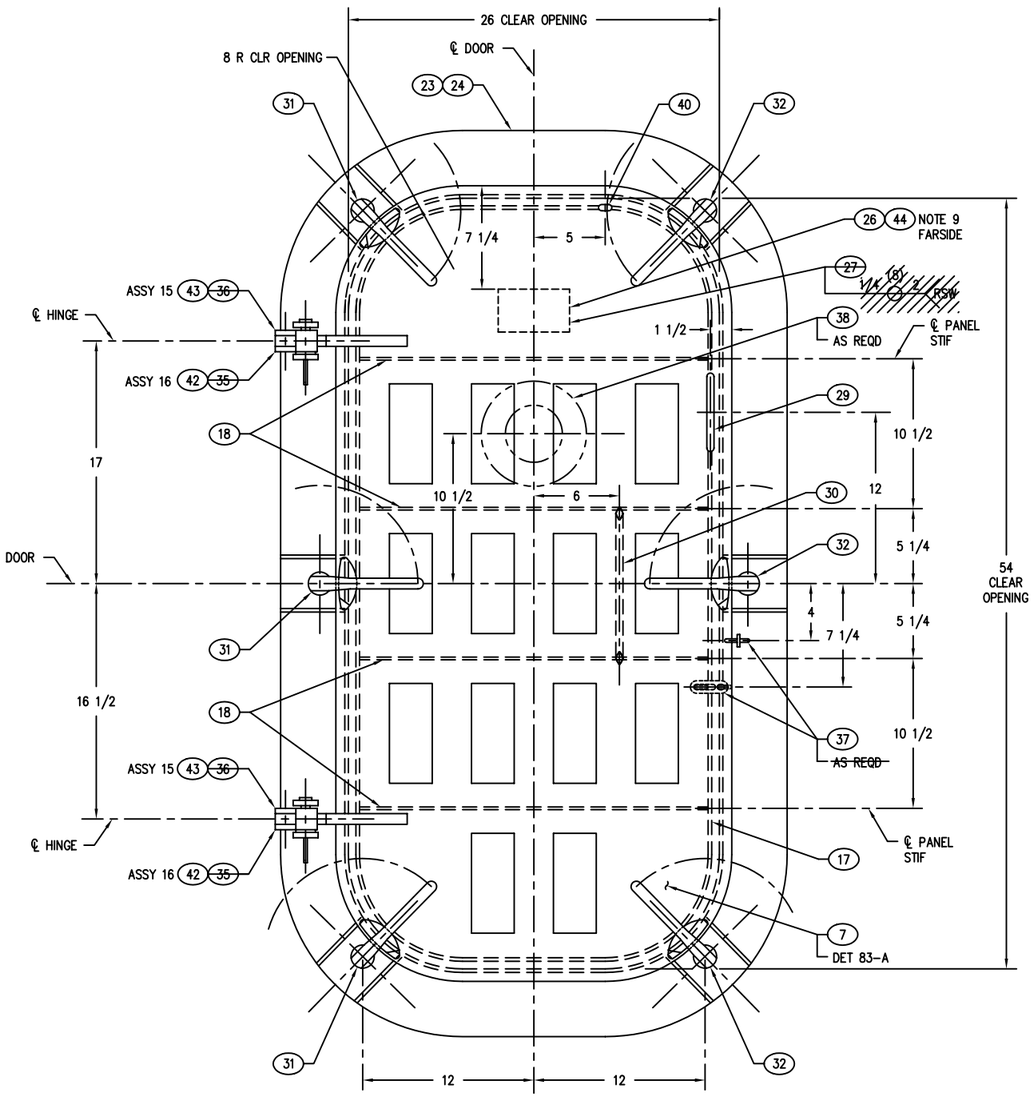

DETAIL 35-A △A
OUTSIDE VIEW
26 X 54 WT DOOR – 6 DOG
ASSEMBLY 15 – LH SHOWN
ASSEMBLY 16 – RH TO OPP HAND
SCALE: 1/4

DEPARTMENT OF THE NAVY
NAVAL SEA SYSTEMS COMMAND
WASHINGTON, D.C. 20362-5101

	SIZE	CAGE CODE	ESWBS	DRAWING NO.	REV
DRAWN	F	53711	803	6397261	A
ISSUED	SCALE: AS SHOWN	MASS		SHEET 5	

DRAWING 803-6397261 SHEET 5 REV A

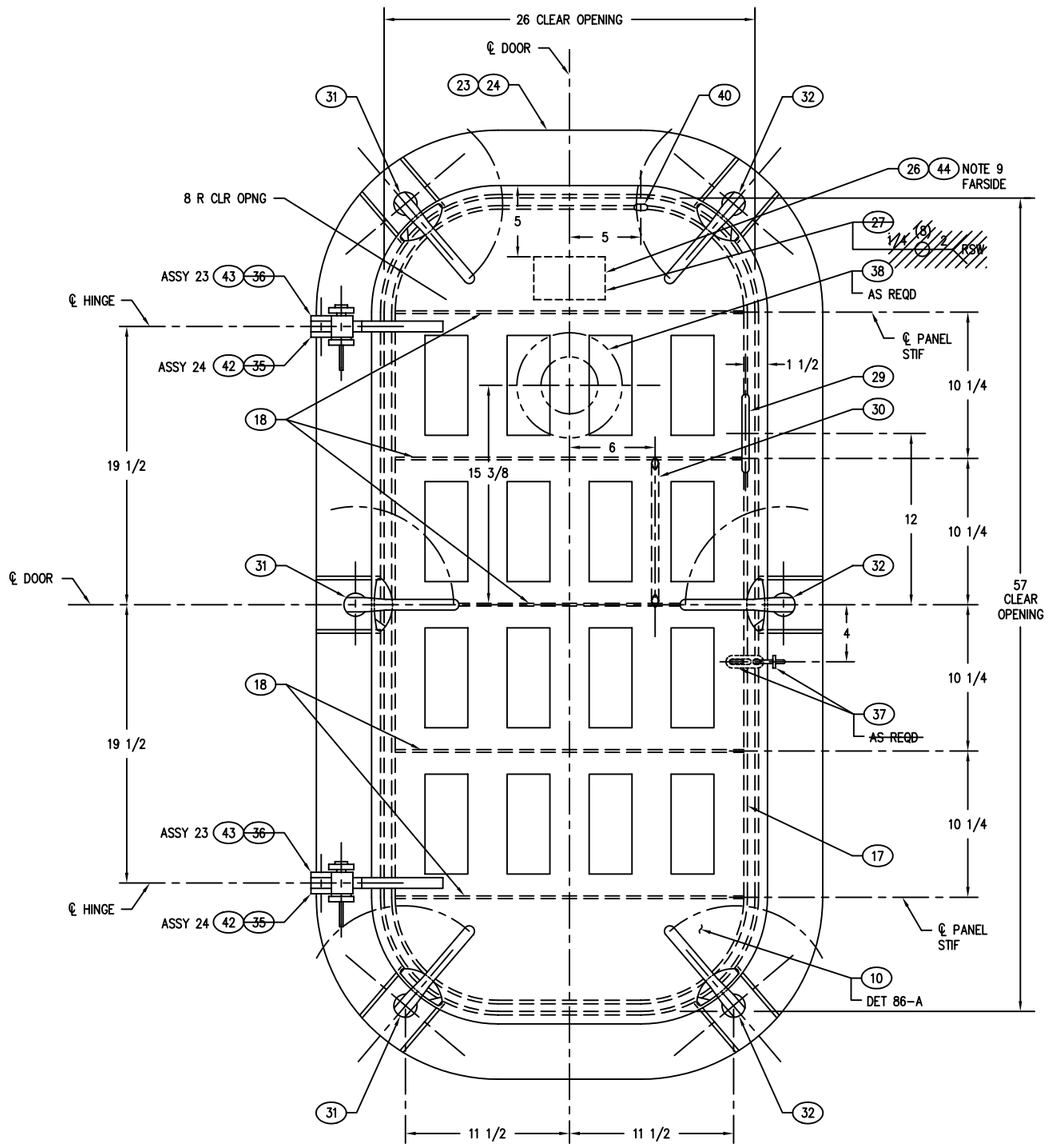

DETAIL 46-A (A)
OUTSIDE VIEW
26 X 57 WT DOOR – 6 DOG
ASSEMBLY 23 – LH SHOWN
ASSEMBLY 24 – RH TO OPP HAND
SCALE: 1/4

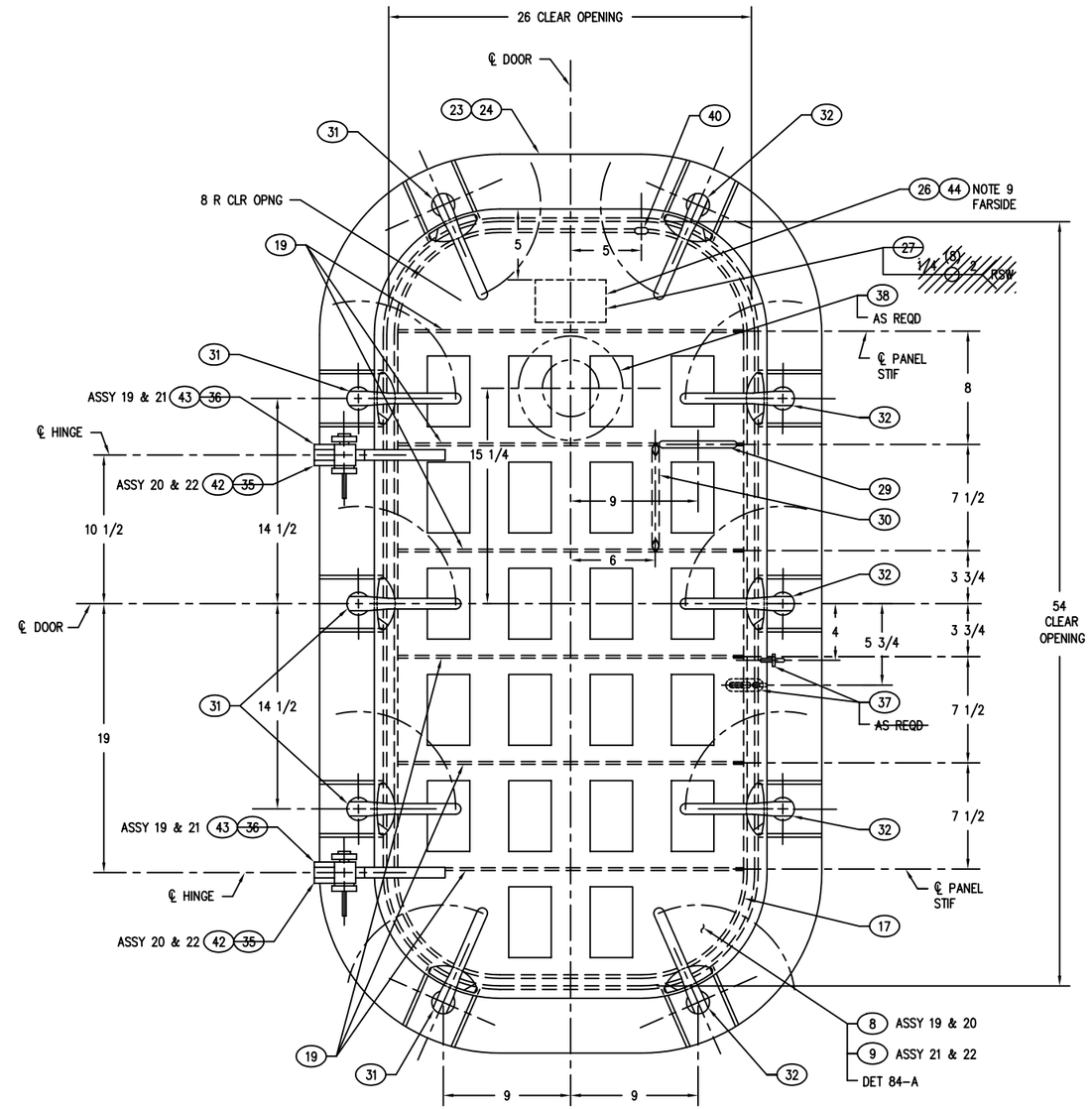

DETAIL 43-A (A)
OUTSIDE VIEW
26 X 54 WT DOOR – 10 DOG
ASSEMBLY 19 & 21 - LH SHOWN
ASSEMBLY 20 & 22 - RH TO OPP HAND
SCALE: 1/4

DEPARTMENT OF THE NAVY NAVAL SEA SYSTEMS COMMAND WASHINGTON, D.C. 20362-5101	SIZE	CAGE CODE	ESWBS	DRAWING NO.	REV
DRAWN	F	53711	803	6397261	A
ISSUED	SCALE: AS SHOWN	MASS		SHEET 6	

DRAWING 803-6397261 SHEET 6 REV A

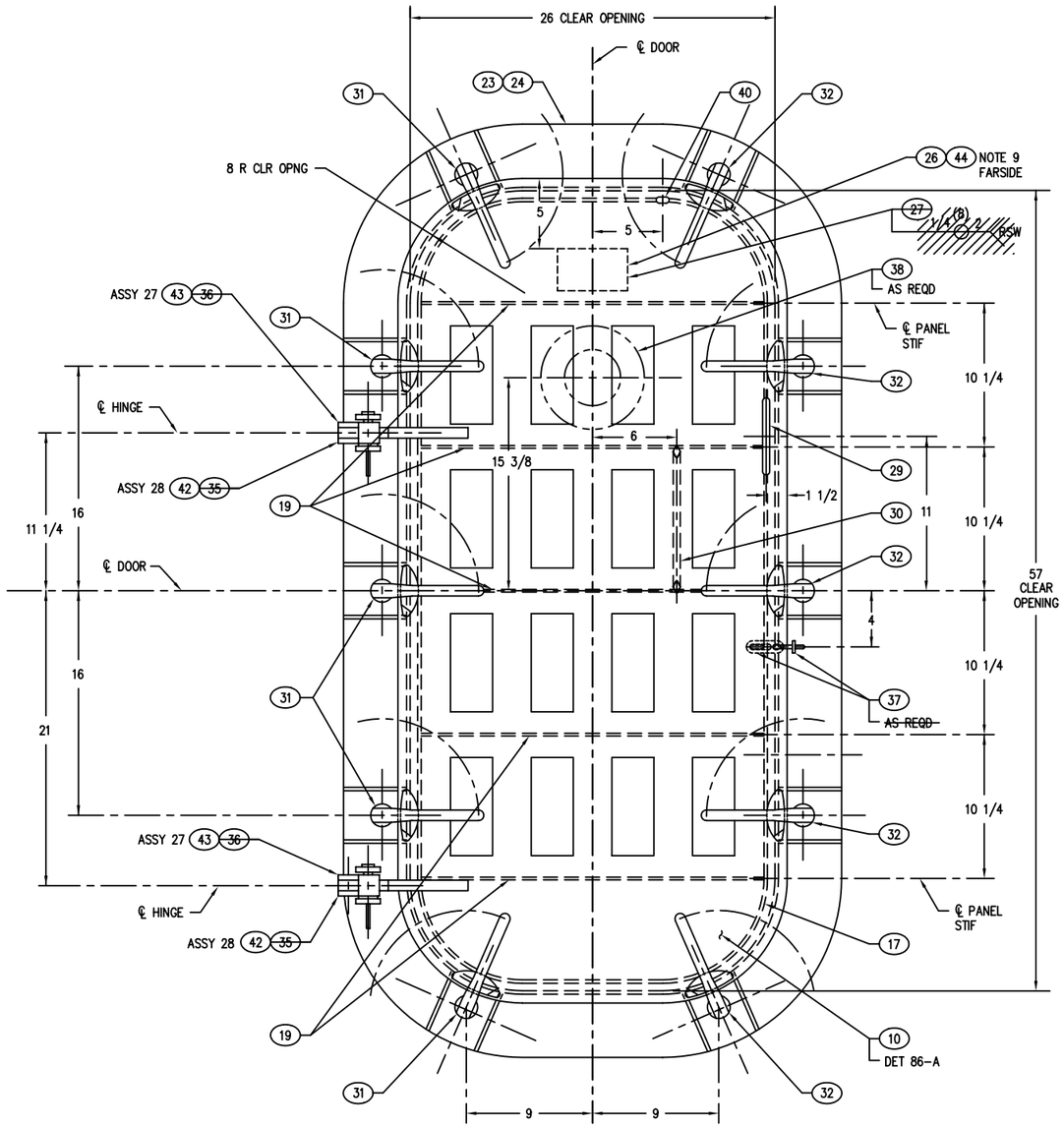

DETAIL 54-A (A)
OUTSIDE VIEW
26 X 57 WT DOOR – 10 DOG
ASSEMBLY 27 – LH SHOWN
ASSEMBLY 28 – RH TO OPP HAND
SCALE: 1/4

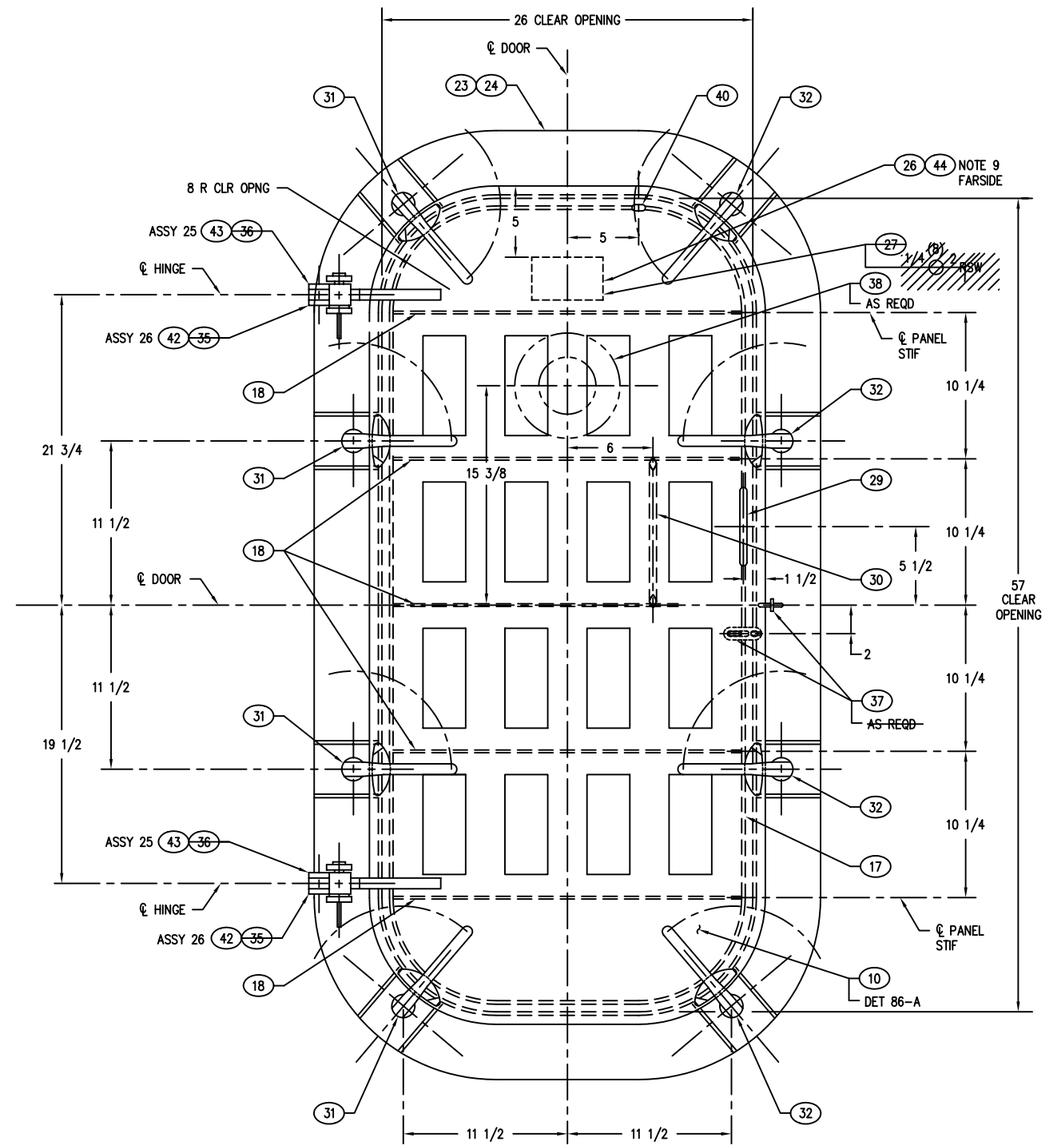

DETAIL 51-A (A)
OUTSIDE VIEW
26 X 57 WT DOOR – 8 DOG
ASSEMBLY 25 – LH SHOWN
ASSEMBLY 26 – RH TO OPP HAND
SCALE: 1/4

DEPARTMENT OF THE NAVY NAVAL SEA SYSTEMS COMMAND WASHINGTON, D.C. 20362-5101	SIZE	CAGE CODE	ESMBS	DRAWING NO.	REV
DRAWN XX	F	53711	803	6397261	A
ISSUED XX	SCALE: AS SHOWN	MASS XXX		SHEET 7	

DRAWING 803-6397261 SHEET 7 REV A

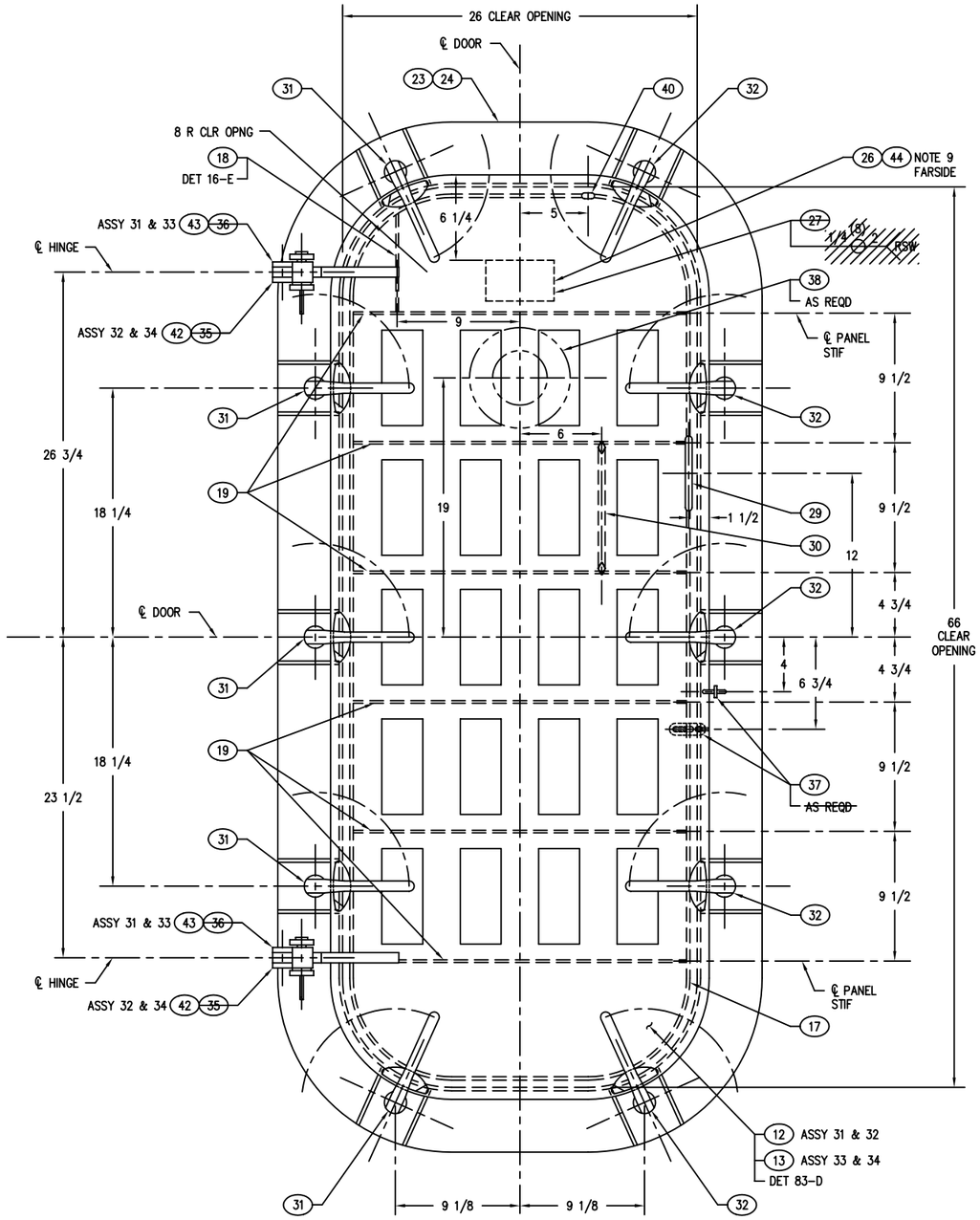

DETAIL 62-A (A)
OUTSIDE VIEW
26 X 66 WT DOOR – 10 DOG
ASSEMBLY 31 & 33 – LH SHOWN
ASSEMBLY 32 & 34 – RH TO OPP HAND
SCALE: 1/4

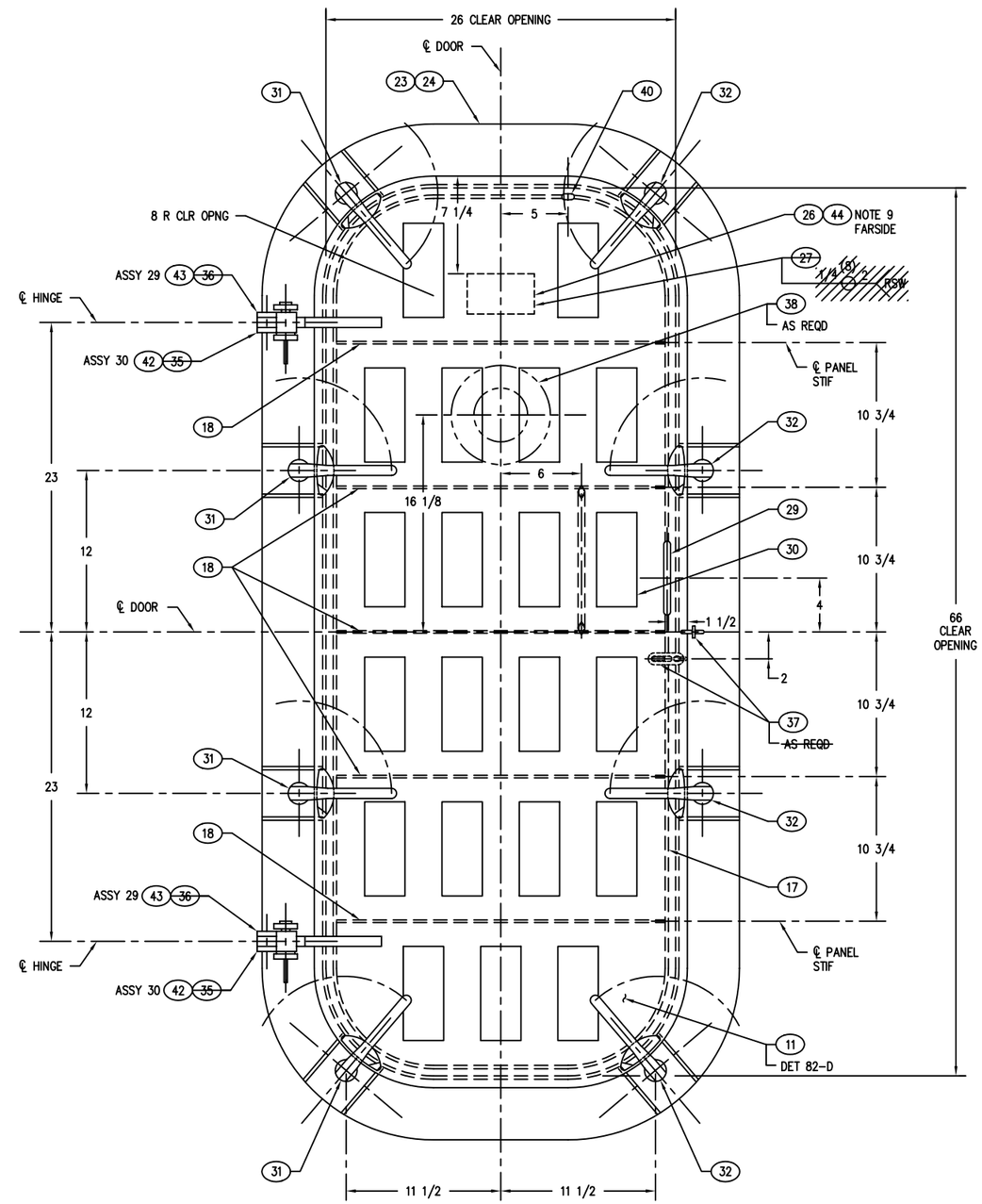

DETAIL 59-A (A)
OUTSIDE VIEW
26 X 66 WT DOOR – 8 DOG
ASSEMBLY 29 – LH SHOWN
ASSEMBLY 30 – RH TO OPP HAND
SCALE: 1/4

DEPARTMENT OF THE NAVY NAVAL SEA SYSTEMS COMMAND WASHINGTON, D.C. 20362-5101	SIZE	CAGE CODE	ESWBS	DRAWING NO.	REV
DRAWN	F	53711	803	6397261	A
ISSUED	SCALE: AS SHOWN	MASS		SHEET 8	

DRAWING 803-6397261 SHEET 8 REV A

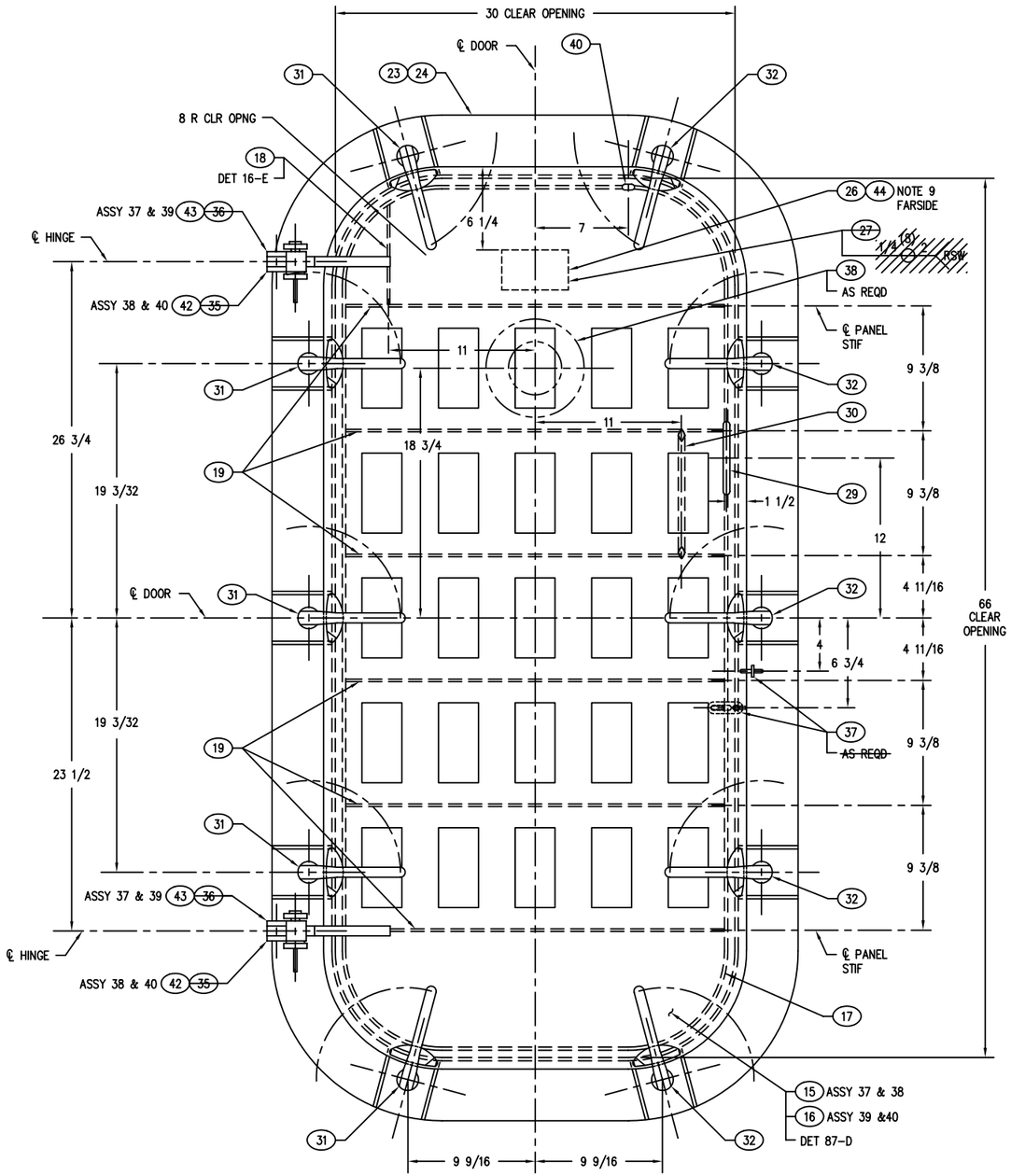

DETAIL 70-A (A)
OUTSIDE VIEW
30 X 66 WT DOOR – 10 DOG
ASSEMBLY 37 & 39– LH SHOWN
ASSEMBLY 38 & 40– RH TO OPP HAND
SCALE: 1/4

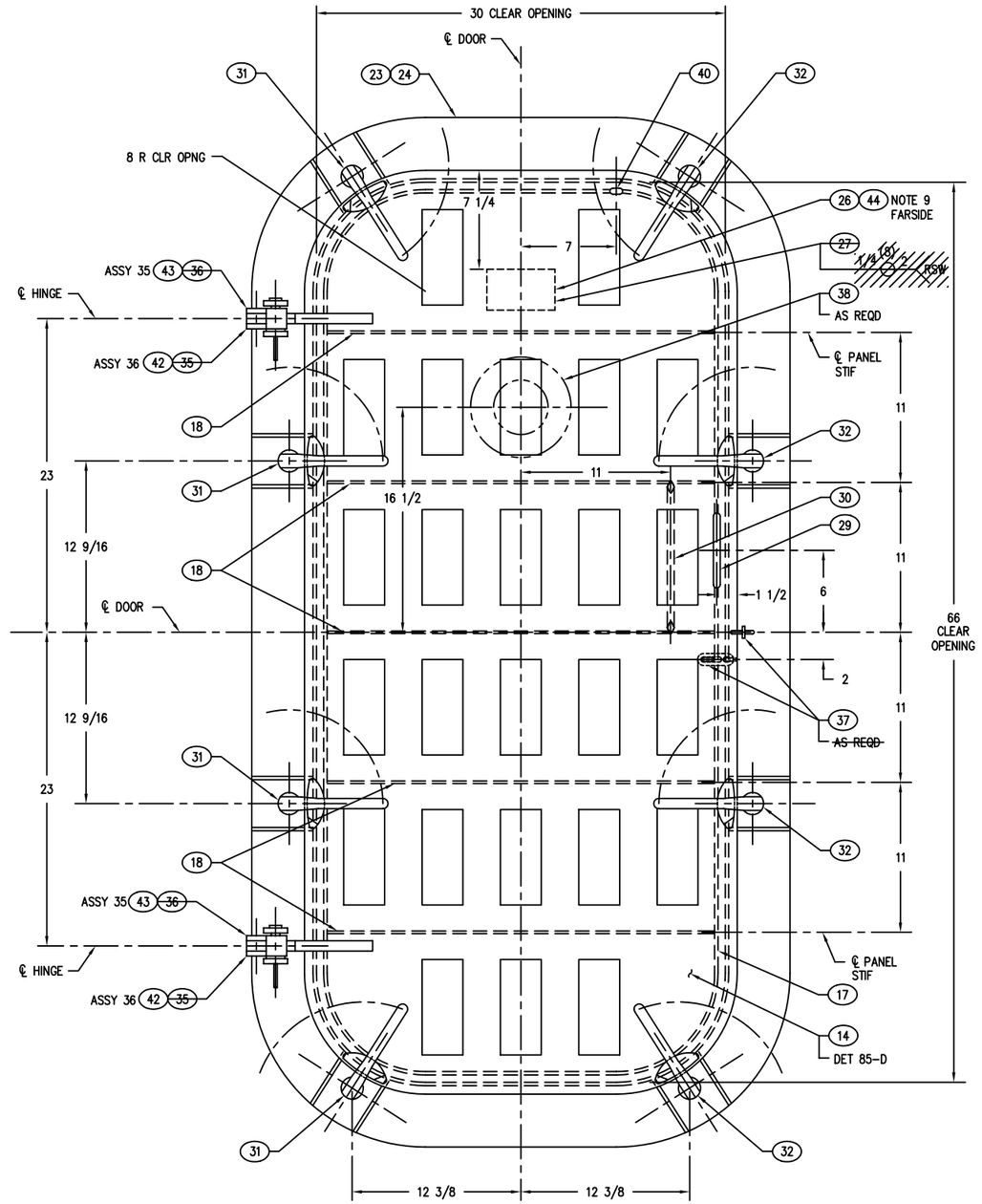

DETAIL 67-A (A)
OUTSIDE VIEW
30 X 66 WT DOOR – 8 DOG
ASSEMBLY 35 – LH SHOWN
ASSEMBLY 36 – RH TO OPP HAND
SCALE: 1/4

DEPARTMENT OF THE NAVY NAVAL SEA SYSTEMS COMMAND WASHINGTON, D.C. 20362-5101	SIZE	CAGE CODE	ESWBS	DRAWING NO.	REV
DRAWN	F	53711	803	6397261	A
ISSUED	SCALE: AS SHOWN	MASS		SHEET 9	

DRAWING 803-6397261 SHEET 9 REV A

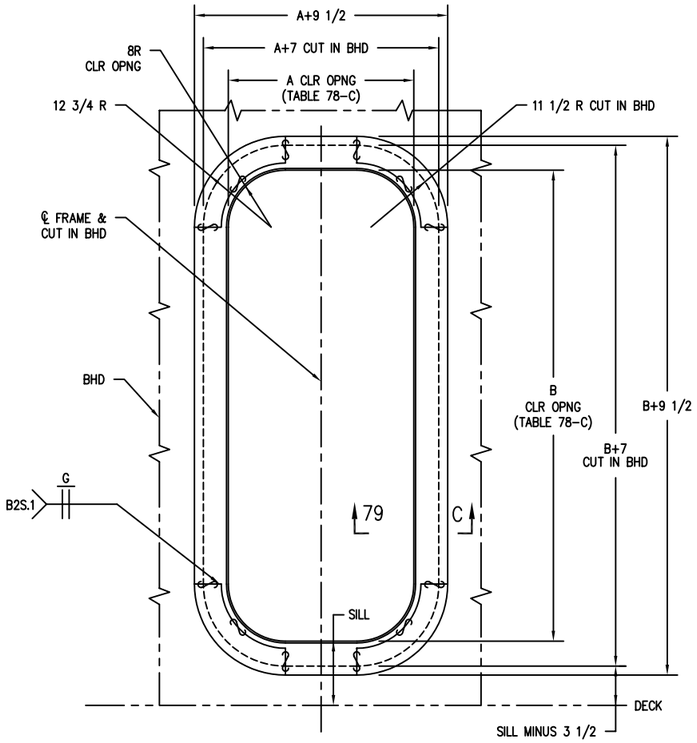

DETAIL 79-D
BULKHEAD FRAME (23) (24)
SCALE: 1/8

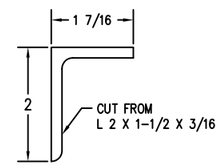

DETAIL 77-F
ALTERNATE RIM STIFFENER (17)
SCALE: FULL

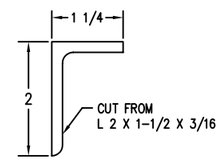

DETAIL 77-D
ALTERNATE RIM STIFFENER (17)
SCALE: FULL

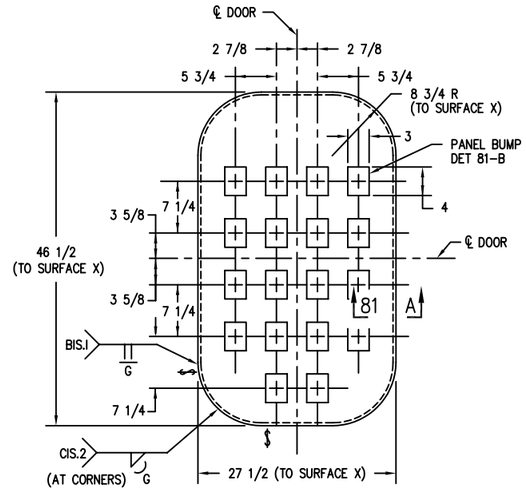

DETAIL 75-D
PANEL (5) OR (6)
SCALE: 1/8

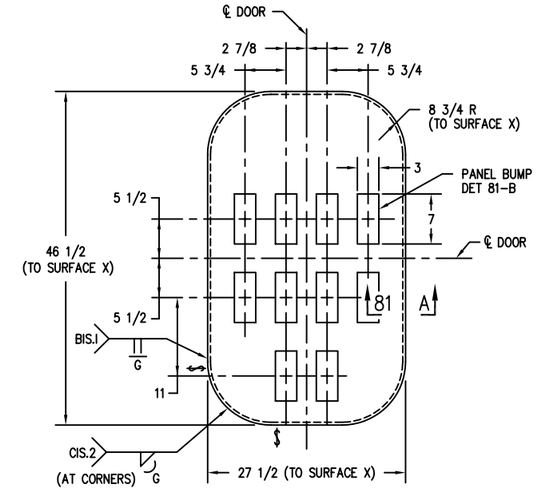

DETAIL 73-D
PANEL (4)
SCALE: 1/8

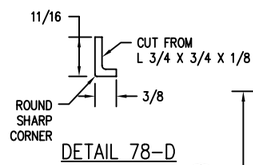

DETAIL 78-D
PANEL FRAME (21)
SCALE: FULL

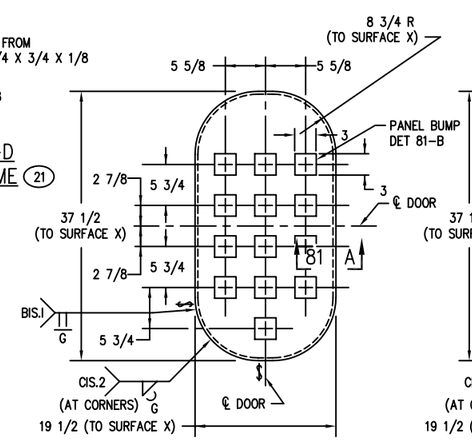

DETAIL 76-B
PANEL (3)
SCALE: 1/8

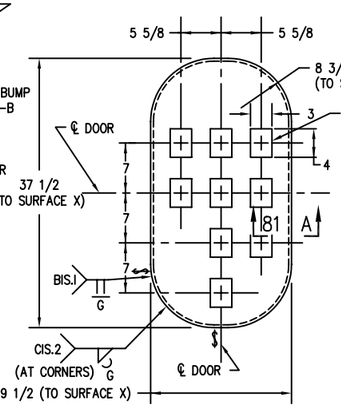

DETAIL 75-B
PANEL (2)
SCALE: 1/8

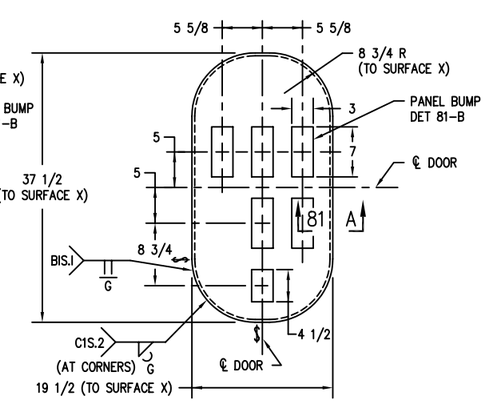

DETAIL 73-B
PANEL (1)
SCALE: 1/8

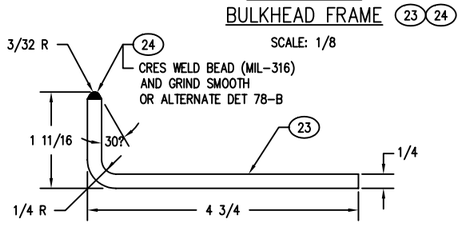

SECTION 79-C
(DETAIL 79-D)
SCALE: FULL

ASSY	DIM A	DIM B
1-6	18	36
7-14	26	45
15-22	26	54
23-28	26	57
29-34	26	66
35-40	30	66

TABLE 78-C
(DETAIL 79-D)

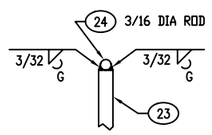

DETAIL 78-B
(SECTION 79-C)
SCALE: FULL

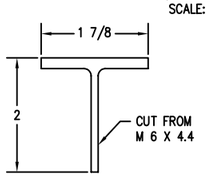

NOTE:
L 1-1/2 X 1-1/2 X 1/4 MAY BE SUBSTITUTED FOR THIS SECTION, IF ANGLE IS USED TOE TOWARDS BOTTOM OF DOOR.

SECTION 80-A
PANEL STIFFENER (20)
(DETAIL 74-A)
SCALE: FULL

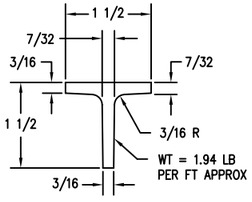

NOTE:
L 1-1/2 X 1-1/2 X 3/16 OR 1-3/4 X 1-7/8 T CUT FROM M 6 X 4.4 MAY BE SUBSTITUTED FOR THIS SECTION, IF ANGLE IS USED TOE TOWARDS BOTTOM OF DOOR.

SECTION 79-A
PANEL STIFFENER (19)
(DETAIL 74-A)
SCALE: FULL

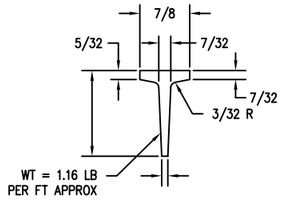

NOTE:
L 1-1/2 X 1-1/2 X 1/8 OR 1-1/2 X 1 T CUT FROM M 6 X 4.4 MAY BE SUBSTITUTED FOR THIS SECTION. IF ANGLE IS USED TOE TOWARDS BOTTOM OF DOOR.

SECTION 77-A
PANEL STIFFENER (18)
(DETAIL 74-A)
SCALE: FULL

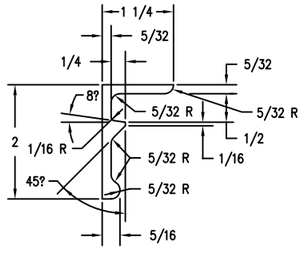

DETAIL 76-A
RIM STIFFENER (17)
SCALE: FULL

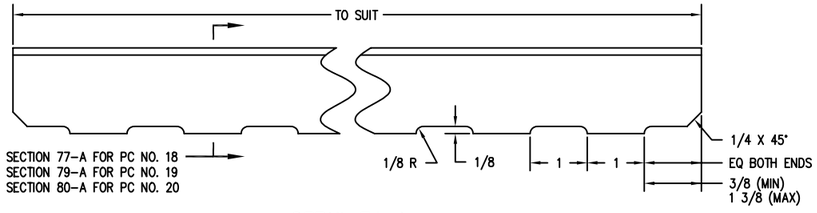

DETAIL 74-A
PANEL STIFFENER (18) (19) (20)
SCALE: FULL

DRAWING 803-6397261 SHEET 10 REV -

DEPARTMENT OF THE NAVY NAVAL SEA SYSTEMS COMMAND WASHINGTON, D.C. 20362-5101	SIZE	CAGE CODE	ESMBS	DRAWING NO.	REV
DRAWN	F	53711	803	6397261	–
ISSUED	SCALE: AS SHOWN	MASS		SHEET 10	

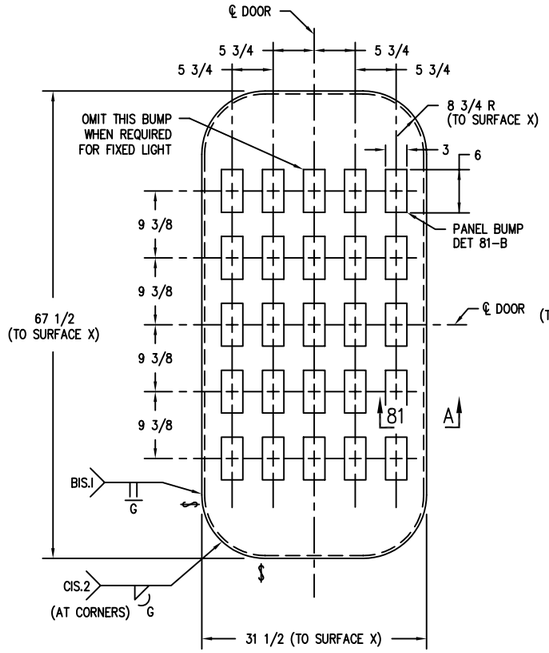

DETAIL 87-D
PANEL (15) OR (16)
SCALE: 1/8

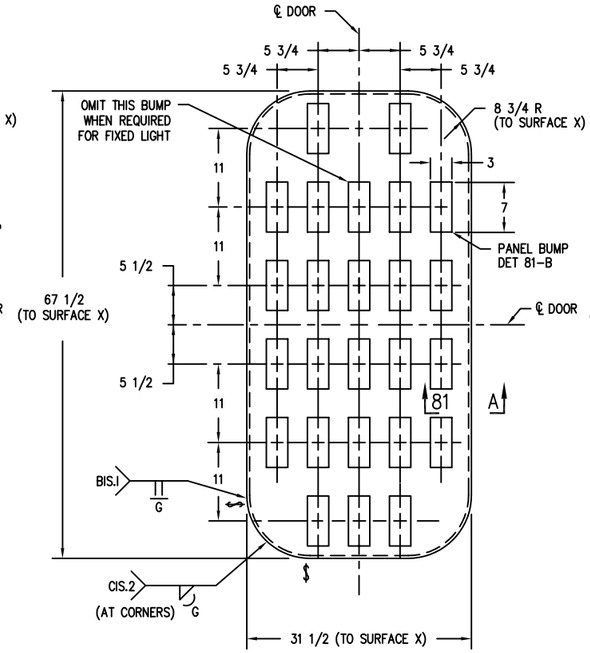

DETAIL 85-D
PANEL (14)
SCALE: 1/8

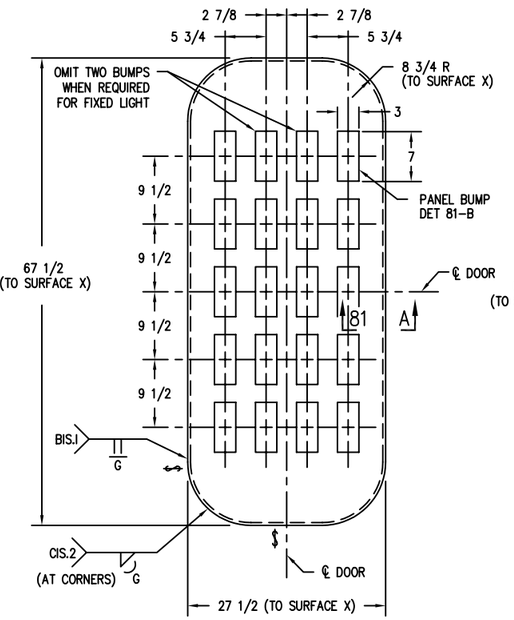

DETAIL 83-D
PANEL (12) OR (13)
SCALE: 1/8

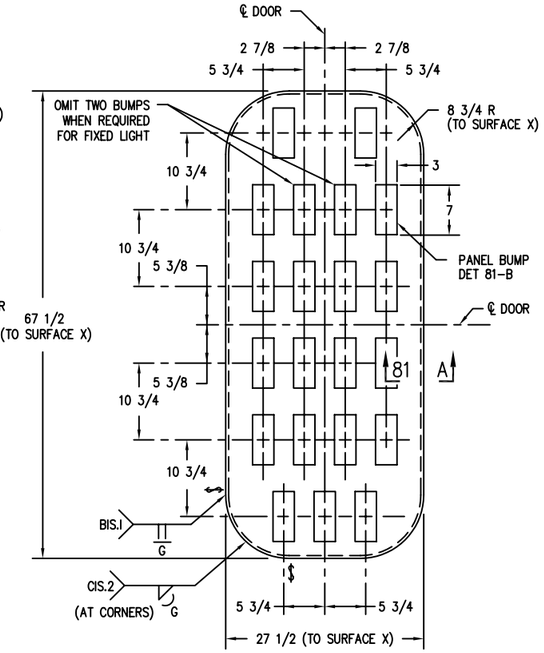

DETAIL 82-D
PANEL (11)
SCALE: 1/8

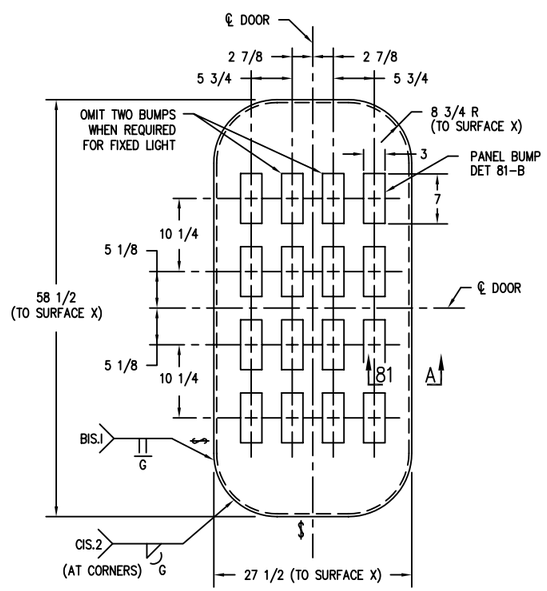

DETAIL 86-A
PANEL (10)
SCALE: 1/8

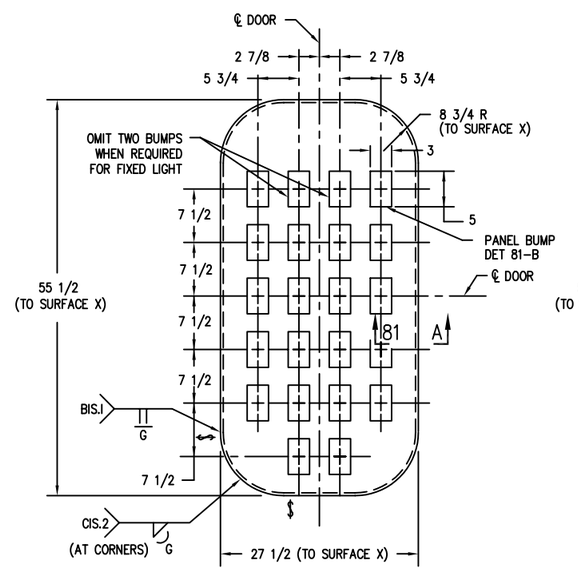

DETAIL 84-A
PANEL (8) OR (9)
SCALE: 1/8

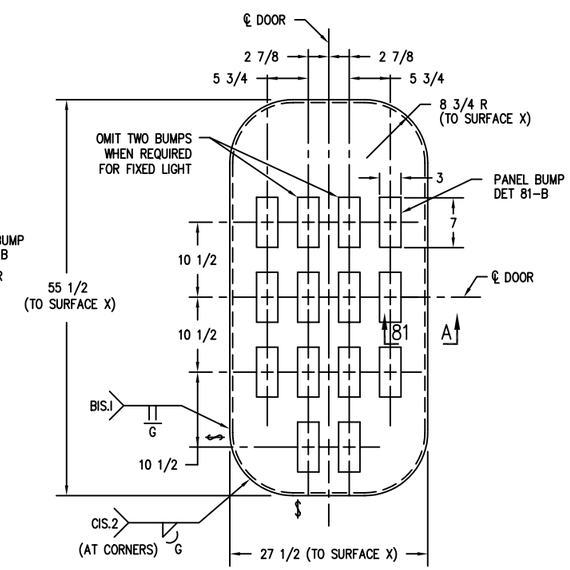

DETAIL 83-A
PANEL (7)
SCALE: 1/8

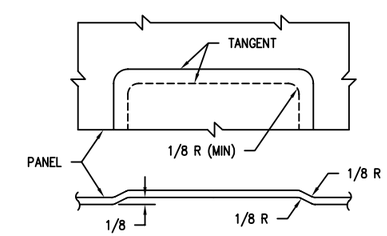

DETAIL 81-B
PANEL BUMP
SCALE: FULL

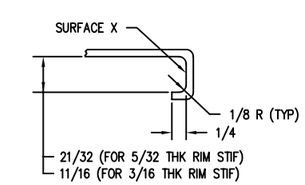

SECTION 81-A
SCALE: FULL

DEPARTMENT OF THE NAVY NAVAL SEA SYSTEMS COMMAND WASHINGTON, D.C. 20362-5101	SIZE	CAGE CODE	ESWBS	DRAWING NO.	REV
DRAWN	F	53711	803	6397261	–
ISSUED	SCALE: AS SHOWN	MASS		SHEET 11	

DRAWING 803-6397261 SHEET 11 REV –

DOOR ASSEMBLY

ASSY NO.	SIZE	HAND	MAX PRESS	NO.OF DOGS	PANEL THK	ASSY DET	WEIGHT APPROX	DOG ASSY	HINGE ASSY	HASP ASSY	FIXED LIGHT	SUPERSEDED DRAWING & ASSY NO.
1-A	18 X 36	L	6	4	.075	10-A	117 LB	A,B	P	I & J	—	805-1400073 414 & 418
1-B	18 X 36	L	6	4	.075	10-A	117 LB	A,B	R	I & J	—	805-1400073 416 & 420
2-A	18 X 36	R	6	4	.075	10-A	117 LB	A,B	O	I & J	—	805-1400073 413 & 417
2-B	18 X 36	R	6	4	.075	10-A	117 LB	A,B	Q	I & J	—	805-1400073 415 & 419
3-A	18 X 36	L	19	6	.075	12-A	129 LB	A,B	P	I & J	—	805-1400073 422 & 426
3-B	18 X 36	L	19	6	.075	12-A	129 LB	A,B	R	I & J	—	805-1400073 424 & 428
4-A	18 X 36	R	19	6	.075	12-A	129 LB	A,B	O	I & J	—	805-1400073 421 & 425
4-B	18 X 36	R	19	6	.075	12-A	129 LB	A,B	Q	I & J	—	805-1400073 423 & 427
5-A	18 X 36	L	26	6	.075	15-A	131 LB	A,B	P	I & J	—	805-1400073 430 & 434
5-B	18 X 36	L	26	6	.075	15-A	131 LB	A,B	R	I & J	—	805-1400073 432 & 436
6-A	18 X 36	R	26	6	.075	15-A	131 LB	A,B	O	I & J	—	805-1400073 429 & 433
6-B	18 X 36	R	26	6	.075	15-A	131 LB	A,B	Q	I & J	—	805-1400073 431 & 435
7-A	26 X 45	L	10	6	.075	19-A	158 LB	A,B	P	I & J	—	805-1400071 382 & 386
7-B	26 X 45	L	10	6	.075	19-A	158 LB	A,B	R	I & J	—	805-1400071 384 & 388
8-A	26 X 45	R	10	6	.075	19-A	158 LB	A,B	O	I & J	—	805-1400071 381 & 385
8-B	26 X 45	R	10	6	.075	19-A	158 LB	A,B	Q	I & J	—	805-1400071 383 & 387
9-A	26 X 45	L	21	8	.075	22-A	187 LB	A,B	P	I & J	—	805-1400071 390 & 394
9-B	26 X 45	L	21	8	.075	22-A	187 LB	A,B	R	I & J	—	805-1400071 392 & 396
10-A	26 X 45	R	21	8	.075	22-A	187 LB	A,B	O	I & J	—	805-1400071 389 & 393
10-B	26 X 45	R	21	8	.075	22-A	187 LB	A,B	Q	I & J	—	805-1400071 391 & 395
11-A	26 X 45	L	32	10	.120	27-A	215 LB	A,B,C	P	I & J	—	805-1400072 398 & 402
11-B	26 X 45	L	32	10	.120	27-A	215 LB	A,B,C	R	I & J	—	805-1400072 400 & 404
12-A	26 X 45	R	32	10	.120	27-A	215 LB	A,B,D	O	I & J	—	805-1400072 397 & 401
12-B	26 X 45	R	32	10	.120	27-A	215 LB	A,B,D	Q	I & J	—	805-1400072 399 & 403
13-A	26 X 45	L	37	12	.120	30-A	226 LB	A,B,C	P	I & J	—	805-1400072 406 & 410
13-B	26 X 45	L	37	12	.120	30-A	226 LB	A,B,C	R	I & J	—	805-1400072 408 & 412
14-A	26 X 45	R	37	12	.120	30-A	226 LB	A,B,D	O	I & J	—	805-1400072 405 & 409
14-B	26 X 45	R	37	12	.120	30-A	226 LB	A,B,D	Q	I & J	—	805-1400072 407 & 411
15-A	26 X 54	L	7	6	.075	35-A	194 LB	A,B	P	I & J	NO	805-1400070 350 & 354
15-B	26 X 54	L	7	6	.075	35-A	194 LB	A,B	R	I & J	NO	805-1400070 352 & 356
15-C	26 X 54	L	7	6	.075	35-A	194 LB	A,B	P	I & J	YES	
15-D	26 X 54	L	7	6	.075	35-A	194 LB	A,B	R	I & J	YES	
16-A	26 X 54	R	7	6	.075	35-A	194 LB	A,B	O	I & J	NO	805-1400070 349 & 353
16-B	26 X 54	R	7	6	.075	35-A	194 LB	A,B	Q	I & J	NO	805-1400070 351 & 355
16-C	26 X 54	R	7	6	.075	35-A	194 LB	A,B	O	I & J	YES	
16-D	26 X 54	R	7	6	.075	35-A	194 LB	A,B	Q	I & J	YES	
17-A	26 X 54	L	16	8	.075	38-A	205 LB	A,B	P	I & J	NO	805-1400070 358 & 362
17-B	26 X 54	L	16	8	.075	38-A	205 LB	A,B	R	I & J	NO	805-1400070 360 & 364
17-C	26 X 54	L	16	8	.075	38-A	205 LB	A,B	P	I & J	YES	
17-D	26 X 54	L	16	8	.075	38-A	205 LB	A,B	R	I & J	YES	

DOOR ASSEMBLY

ASSY NO.	SIZE	HAND	MAX PRESS	NO.OF DOGS	PANEL THK	ASSY DET	WEIGHT APPROX	DOG ASSY	HINGE ASSY	HASP ASSY	FIXED LIGHT	SUPERSEDED DRAWING & ASSY NO.
18-A	26 X 54	R	16	8	.075	38-A	205 LB	A,B	O	I & J	NO	805-1400070 357 & 361
18-B	26 X 54	R	16	8	.075	38-A	205 LB	A,B	Q	I & J	NO	805-1400070 359 & 363
18-C	26 X 54	R	16	8	.075	38-A	205 LB	A,B	O	I & J	YES	
18-D	26 X 54	R	16	8	.075	38-A	205 LB	A,B	Q	I & J	YES	
19-A	26 X 54	L	22	10	.075	43-A	221 LB	A,B	P	I & J	NO	805-1623053 366 & 370
19-B	26 X 54	L	22	10	.075	43-A	221 LB	A,B	R	I & J	NO	805-1623053 368 & 372
19-C	26 X 54	L	22	10	.075	43-A	221 LB	A,B	P	I & J	YES	
19-D	26 X 54	L	22	10	.075	43-A	221 LB	A,B	R	I & J	YES	
20-A	26 X 54	R	22	10	.075	43-A	221 LB	A,B	O	I & J	NO	805-1623053 365 & 369
20-B	26 X 54	R	22	10	.075	43-A	221 LB	A,B	Q	I & J	NO	805-1623053 367 & 371
20-C	26 X 54	R	22	10	.075	43-A	221 LB	A,B	O	I & J	YES	
20-D	26 X 54	R	22	10	.075	43-A	221 LB	A,B	Q	I & J	YES	
21-A	26 X 54	L	28	10	.120	43-A	240 LB	A,B	P	I & J	NO	805-1623053 374 & 378
21-B	26 X 54	L	28	10	.120	43-A	240 LB	A,B	R	I & J	NO	805-1623053 376 & 380
21-C	26 X 54	L	28	10	.120	43-A	240 LB	A,B	P	I & J	YES	
21-D	26 X 54	L	28	10	.120	43-A	240 LB	A,B	R	I & J	YES	
22-A	26 X 54	R	28	10	.120	43-A	240 LB	A,B	O	I & J	NO	805-1623053 373 & 377
22-B	26 X 54	R	28	10	.120	43-A	240 LB	A,B	Q	I & J	NO	805-1623053 375 & 379
22-C	26 X 54	R	28	10	.120	43-A	240 LB	A,B	O	I & J	YES	
22-D	26 X 54	R	28	10	.120	43-A	240 LB	A,B	Q	I & J	YES	
23-A	26 X 57	L	6	6	.075	46-A	203 LB	A,B	P	I & J	NO	805-1400069 326 & 330
23-B	26 X 57	L	6	6	.075	46-A	203 LB	A,B	R	I & J	NO	805-1400069 328 & 332
23-C	26 X 57	L	6	6	.075	46-A	203 LB	A,B	P	I & J	YES	
23-D	26 X 57	L	6	6	.075	46-A	203 LB	A,B	R	I & J	YES	
24-A	26 X 57	R	6	6	.075	46-A	203 LB	A,B	O	I & J	NO	805-1400069 325 & 329
24-B	26 X 57	R	6	6	.075	46-A	203 LB	A,B	Q	I & J	NO	805-1400069 327 & 331
24-C	26 X 57	R	6	6	.075	46-A	203 LB	A,B	O	I & J	YES	
24-D	26 X 57	R	6	6	.075	46-A	203 LB	A,B	Q	I & J	YES	
25-A	26 X 57	L	9.5	8	.075	51-A	216 LB	A,B	P	I & J	NO	805-1400069 334 & 338
25-B	26 X 57	L	9.5	8	.075	51-A	216 LB	A,B	R	I & J	NO	805-1400069 336 & 340
25-C	26 X 57	L	9.5	8	.075	51-A	216 LB	A,B	P	I & J	YES	
25-D	26 X 57	L	9.5	8	.075	51-A	216 LB	A,B	R	I & J	YES	
26-A	26 X 57	R	9.5	8	.075	51-A	216 LB	A,B	O	I & J	NO	805-1400069 333 & 337
26-B	26 X 57	R	9.5	8	.075	51-A	216 LB	A,B	Q	I & J	NO	805-1400069 335 & 339
26-C	26 X 57	R	9.5	8	.075	51-A	216 LB	A,B	O	I & J	YES	
26-D	26 X 57	R	9.5	8	.075	51-A	216 LB	A,B	Q	I & J	YES	
27-A	26 X 57	L	12.5	10	.075	54-A	233 LB	A,B	P	I & J	NO	805-1623052 342 & 346
27-B	26 X 57	L	12.5	10	.075	54-A	233 LB	A,B	R	I & J	NO	805-1623052 344 & 348
27-C	26 X 57	L	12.5	10	.075	54-A	233 LB	A,B	P	I & J	YES	
27-D	26 X 57	L	12.5	10	.075	54-A	233 LB	A,B	R	I & J	YES	
28-A	26 X 57	R	12.5	10	.075	54-A	233 LB	A,B	O	I & J	NO	805-1623052 341 & 345
28-B	26 X 57	R	12.5	10	.075	54-A	233 LB	A,B	Q	I & J	NO	805-1623052 343 & 347
28-C	26 X 57	R	12.5	10	.075	54-A	233 LB	A,B	O	I & J	YES	
28-D	26 X 57	R	12.5	10	.075	54-A	233 LB	A,B	Q	I & J	YES	
29-A	26 X 66	L	10	8	.075	59-A	231 LB	A,B	P	I & J	NO	805-1400066 318 & 322
29-B	26 X 66	L	10	8	.075	59-A	231 LB	A,B	R	I & J	NO	805-1400066 320 & 324
29-C	26 X 66	L	10	8	.075	59-A	231 LB	A,B	P	I & J	YES	
29-D	26 X 66	L	10	8	.075	59-A	231 LB	A,B	R	I & J	YES	

DOOR ASSEMBLY

ASSY NO.	SIZE	HAND	MAX PRESS	NO.OF DOGS	PANEL THK	ASSY DET	WEIGHT APPROX	DOG ASSY	HINGE ASSY	HASP ASSY	FIXED LIGHT	SUPERSEDED DRAWING & ASSY NO.
30-A	26 X 66	R	10	8	.075	59-A	231 LB	A,B	Q	I & J	NO	805-1400066 317 & 321
30-B	26 X 66	R	10	8	.075	59-A	231 LB	A,B	Q	I & J	NO	805-1400066 319 & 323
30-C	26 X 66	R	10	8	.075	59-A	231 LB	A,B	O	I & J	YES	
30-D	26 X 66	R	10	8	.075	59-A	231 LB	A,B	Q	I & J	YES	
31-A	26 X 66	L	15	10	.075	62-A	248 LB	A,B	P	I & J	NO	805-1400066 302 & 306
31-B	26 X 66	L	15	10	.075	62-A	248 LB	A,B	R	I & J	NO	805-1400066 304 & 308
31-C	26 X 66	L	15	10	.075	62-A	248 LB	A,B	P	I & J	YES	
31-D	26 X 66	L	15	10	.075	62-A	248 LB	A,B	R	I & J	YES	
32-A	26 X 66	R	15	10	.075	62-A	248 LB	A,B	O	I & J	NO	805-1400066 301 & 305
32-B	26 X 66	R	15	10	.075	62-A	248 LB	A,B	Q	I & J	NO	805-1400066 303 & 307
32-C	26 X 66	R	15	10	.075	62-A	248 LB	A,B	O	I & J	YES	
32-D	26 X 66	R	15	10	.075	62-A	248 LB	A,B	Q	I & J	YES	
33-A	26 X 66	L	5/13	10	.120	62-A	271 LB	A,B	P	I & J	NO	805-1400066 310 & 314
33-B	26 X 66	L	5/13	10	.120	62-A	271 LB	A,B	R	I & J	NO	805-1400066 312 & 316
33-C	26 X 66	L	5/13	10	.120	62-A	271 LB	A,B	P	I & J	YES	
33-D	26 X 66	L	5/13	10	.120	62-A	271 LB	A,B	R	I & J	YES	
34-A	26 X 66	R	5/13	10	.120	62-A	271 LB	A,B	O	I & J	NO	805-1400066 309 & 313
34-B	26 X 66	R	5/13	10	.120	62-A	271 LB	A,B	Q	I & J	NO	805-1400066 311 & 315
34-C	26 X 66	R	5/13	10	.120	62-A	271 LB	A,B	O	I & J	YES	
34-D	26 X 66	R	5/13	10	.120	62-A	271 LB	A,B	Q	I & J	YES	
35-A	30 X 66	L	5	8	.075	67-A	244 LB	A,B	P	I & J	NO	805-1626357 478 & 482
35-B	30 X 66	L	5	8	.075	67-A	244 LB	A,B	R	I & J	NO	805-1626357 480 & 484
35-C	30 X 66	L	5	8	.075	67-A	244 LB	A,B	P	I & J	YES	
35-D	30 X 66	L	5	8	.075	67-A	244 LB	A,B	R	I & J	YES	
36-A	30 X 66	R	5	8	.075	67-A	244 LB	A,B	O	I & J	NO	805-1626357 477 & 481
36-B	30 X 66	R	5	8	.075	67-A	244 LB	A,B	Q	I & J	NO	805-1626357 479 & 483
36-C	30 X 66	R	5	8	.075	67-A	244 LB	A,B	O	I & J	YES	
36-D	30 X 66	R	5	8	.075	67-A	244 LB	A,B	Q	I & J	YES	
37-A	30 X 66	L	15	10	.075	70-A	263 LB	A,B	P	I & J	NO	805-1626357 462 & 465
37-B	30 X 66	L	15	10	.075	70-A	263 LB	A,B	R	I & J	NO	805-1626357 464 & 468
37-C	30 X 66	L	15	10	.075	70-A	263 LB	A,B	P	I & J	YES	
37-D	30 X 66	L	15	10	.075	70-A	263 LB	A,B	R	I & J	YES	
38-A	30 X 66	R	15	10	.075	70-A	263 LB	A,B	O	I & J	NO	805-1626357 461 & 465
38-B	30 X 66	R	15	10	.075	70-A	263 LB	A,B	Q	I & J	NO	805-1626357 463 & 467
38-C	30 X 66	R	15	10	.075	70-A	263 LB	A,B	O	I & J	YES	
38-D	30 X 66	R	15	10	.075	70-A	263 LB	A,B	Q	I & J	YES	
39-A	30 X 66	L	5/13	10	.120	70-A	290 LB	A,B	P	I & J	NO	805-1626357 470 & 474
39-B	30 X 66	L	5/13	10	.120	70-A	290 LB	A,B	R	I & J	NO	805-1626357 472 & 476
39-C	30 X 66	L	5/13	10	.120	70-A	290 LB	A,B	P	I & J	YES	
39-D	30 X 66	L	5/13	10	.120	70-A	290 LB	A,B	R	I & J	YES	
40-A	30 X 66	R	5/13	10	.120	70-A	290 LB	A,B	O	I & J	NO	805-1626357 469 & 473
40-B	30 X 66	R	5/13	10	.120	70-A	290 LB	A,B	Q	I & J	NO	805-1626357 471 & 475
40-C	30 X 66	R	5/13	10	.120	70-A	290 LB	A,B	O	I & J	YES	
40-D	30 X 66	R	5/13	10	.120	70-A	290 LB	A,B	Q	I & J	YES	

HINGE ASSY (A)

ASSY E	RH LOW TYPE SST,	NOTE 12
ASSY F	LH LOW TYPE SST,	NOTE 12
ASSY G	RH HIGH TYPE SST,	NOTE 12
ASSY H	LH HIGH TYPE SST,	NOTE 12
ASSY O	RH LOW TYPE SST,	NOTE 12
ASSY P	LH LOW TYPE SST,	NOTE 12
ASSY Q	RH HIGH TYPE SST,	NOTE 12
ASSY R	LH HIGH TYPE SST,	NOTE 12

DOG ASSY

ASSY A	RH REGULAR
ASSY B	LH REGULAR
ASSY C	RH MODIFIED
ASSY D	LH MODIFIED

HASP ASSY

ASSY I	OUTSIDE TYPE
ASSY J	INSIDE TYPE

DRAWING 803-6397261 SHEET 12 REV A

DEPARTMENT OF THE NAVY
NAVAL SEA SYSTEMS COMMAND
WASHINGTON, D.C. 20362-5101

SIZE	CAGE CODE	ESWBS	DRAWING NO.	REV
F	53711	803	6397261	A

DRAWN
ISSUED
SCALE:NONE MASS SHEET 12

GENERAL NOTES: (CONTINUED FROM SHEET 1) A

9. LABEL PLATES SHALL BE SECURED TO THE INSIDE SURFACE (STIFFINER SIDE) OF THE DOOR PANEL USING 3M VHB DOUBLE COATED ACRYLIC FOAM TAPE, PRODUCT NO. 4949 OR 4950. TAPE SHALL COVER THE FULL SURFACE OF THE LABEL PLATE.

10. LENGTH OF RUBBER GASKET SHALL BE THE FULL MEASURED LENGTH OF THE GASKET CHANNEL PLUS APPROXIMATELY ONE ADDITIONAL INCH. GASKET SHALL BE INSTALLED FLAT SURFACE FACING OUT TOWARD KNIFE EDGE. WHEN FITTING GASKET, CARE SHALL BE TAKEN THAT THE RUBBER IS NOT STRETCHED. GASKET BUTT SHALL BE A SQUARE JOINT WITH BOTH GASKET ENDS HAVING A SMOOTH SQUARE CUT WITH NO JAGGED EDGES. ONLY ONE BUTT JOINT IS PERMITTED AND SHALL BE POSITIONED AT THE TOP OF THE CLOSURE.

11. THIS DRAWING CONTAINS REDESIGNED HINGE ASSEMBLIES FOR NEW CONTRUCTION DOORS AS WELL AS RETAINING THE EXISTING IN-SERVICE HINGE ASSEMBLIES. HINGE ASSEMBLIES E, F, G AND H ARE PROVIDED FOR REPAIR AND REPLACEMENT OF THE IN-SERVICE HINGE ASSEMBLIES, WHEREAS NEW DOORS FABRICATED IN ACCORDANCE WITH THIS DRAWING SHALL USE HINGE ASSEMBLIES O, P, Q AND R AS SPECIFIED ON THE CONTRACT OR PURCHASE ORDER.

12. HINGE ASSEMBLY USE:
    ASSY E: FOR EXISTING RH DOORS WITH LOW HINGES.
    ASSY F: FOR EXISTING LH DOORS WITH LOW HINGES.
    ASSY G: FOR EXISTING RH DOORS WITH HIGH HINGES.
    ASSY H: FOR EXISTING LH DOORS WITH HIGH HINGES.
    ASSY O: FOR EXISTING RH DOORS WITH LOW HINGES.
    ASSY P: FOR EXISTING LH DOORS WITH LOW HINGES.
    ASSY Q: FOR EXISTING RH DOORS WITH HIGH HINGES.
    ASSY R: FOR EXISTING LH DOORS WITH HIGH HINGES.

REVISIONS (CONTINUED FROM SHEET 1)

ZONE	REV	DESCRIPTION	DATE	APPROVED
4-A 83-A	A	EDITED ZONE FOR PC NO. 7 TO 83-A, WAS 82-A.		
4-B 85-D		EDITED ZONE FOR PC NO. 14 TO 85-D, WAS 85-C.		
4-B 87-D		EDITED ZONE FOR PC NO. 15 TO 87-D, WAS 87-C.		
4-B 87-D		EDITED ZONE FOR PC NO. 16 TO 87-D, WAS 87-C.		
4-C 78-D		EDITED ZONE FOR PC NO. 21 TO 78-D, WAS 77-D.		
4-D		DELETED PC NOS 25A, 25C, 26A, 27, 28, 29B, AND 30B, 35 AND 36.		
4-D		CHANGED SPEC FOR PC NO. 25B TO ZZ-R-765 CLASS 3-B, GRADE 30, WAS ZZ-R-765 CLASS 2B, GRADE 40.		
4-D 4-C		CHANGED ZONE OF DET FOR PC NO. 25B TO 48-C, WAS 47-C.		
4-D		MODIFIED REMARK TO PC NO. 25B.		
4-F		DELETED NOTE 2 FROM PC NOS 26B, 37A AND 37B.		
7-F		CHANGED QTY OF ASSY 1 THRU 40 FOR PC NO. 37 TO 1, WAS AR.		
9-F 12-F 15-F		DELETED AT HINGES; 2 & WEDGES FROM WELD SYMBOL.		
10-A 12-A 15-A 19-A 22-A 27-A 30-A 35-A 38-A 43-A 46-A 51-A 54-A 59-A 62-A 67-A 70-A 104-A		ADDED PC NOS 42-44. ADDED NOTE 9, FAR SIDE TO PC NO. 26 FOR ALL DOOR ASSY OUTSIDE VIEWS.		
89-A 97-A		ADDED SHEETS 12 THRU 13.		
95-A		ADDED HINGE ASSYS O THRU R. ADDED SST AND NOTE 12 TO ASSY E THRU R.		
103-F		ADDED GENL NOTES 9 THRU 12.		

A

ASSEMBLY NO. / QUANTITY PER ASSEMBLY																						PC NO.	NAME	REFNO.	PC NO.	ZONE	MATERIAL	IDENTIFYING NO. OR SPECIFICATION	ZONE	REMARKS
40	39	38	37	36	35	34	33	32	31	30	29	28	27	26	25	24	23	22	21	20	19	44	ADHESIVE TAPE	–	–	–	ACRYLIC FOAM	–	9-D	NOTE 9
2	2	2	2	2	2	2	2	2	2	2	2	2	2	2	2	2	2	2	2	2	2	43	43B HINGE ASSEMBLY-ASSY R	1	ASSY R	DET 50-D	–	–	–	NOTE 2 AND 11
																							43A HINGE ASSEMBLY-ASSY P	1	ASSY P	DET 52-A	–	–	–	NOTE 2 AND 11
2	2	2	2	2	2	2	2	2	2	2	2	2	2	2	2	2	2	2	2	2	2	42	42B HINGE ASSEMBLY-ASSY Q	1	ASSY Q	DET 50-D	–	–	–	NOTE 2 AND 11
																							42A HINGE ASSEMBLY-ASSY O	1	ASSY O	DET 52-A	–	–	–	NOTE 2 AND 11

PARTS LIST

DEPARTMENT OF THE NAVY NAVAL SEA SYSTEMS COMMAND WASHINGTON, D.C. 20362-5101	SIZE	CAGE CODE	ESWBS	DRAWING NO.	REV
DRAWN	F	53711	803	6397261	A
ISSUED	SCALE:NONE	MASS		SHEET 13	

DRAWING 803-6397261 SHEET 13 REV A