SHIP	REV	SHIPCK BY	DT

SHIP APPLICABILITY

CONTRACT NO.
FSCM NO.

PREPARED	DATE	AUTHORITY:
CHECKED		
ENGINEER		
APPROVED		

SUPERVISOR OF SHIPBUILDING
CONVERSION AND REPAIR, USN
P.O. BOX 215
PORTSMOUTH, VA. 23705-0215

PREPARED J.E. Pollard	DATE 5/6/99
CHECKED	
ENGINEER	
APPROVED	

DEPARTMENT OF THE NAVY
NAVAL SEA SYSTEM COMMAND
WASHINGTON D.C. 02362

PROCEDURE & WELDING SEQUENCE FOR NON-BALLISTIC, WATERTIGHT & AIRTIGHT QUICK ACTING OR INDIVIDUALLY DOGGED PERSONNEL DOORS

ACCEPTED FOR NAVSEA

APPROVED BY NAVSEA
NOT REQUIRED

PROC & WED SEQ FOR PERS DR

SIZE	FSCM NO.	WT GRP	NAVSEA DRAWING NO.	REV
A	53711	167	7379842	–

SCALE: | CODE: 243 | SHEET 1 OF 12

REVISIONS

REV	SHT	DESCRIPTION	BY	DATE	APPROVED

REV	SHIPALT NUMBER	WEIGHT GROUP	WEIGHT POUNDS	I,R XI OR XR	VCG REF BL	LCG REF ℄	F OR A	TCG REF CL	P S OR O	VAL BY
—	———	———	N/A	—	———	———	—	———	—	TEP

WEIGHT CONTROL DATA

LEVERS IN FEET TO THE NEAREST TENTH OF A FOOT
USE SEPERATE LINES FOR EACH WT GRP, S/A, REV, WT INSTL, WT RMV
I=INSTALL R=REMOVE XI=LOAD ITEM INSTALLED XR=LOAD ITEM REMOVED
F=FWD A=AFT P=PORT S=STBD O=C

SIZE	FSCM NO.	WT GRP	NAVSEA DWG NO.	REV
A	53711	167	7379842	—
SCALE: AS NOTED		CODE: 243		SHEET 2 OF 12

-	-	-	-	-	-	-	-	-	-	-	-
1	2	3	4	5	6	7	8	9	10	11	12

REVISION STATUS OF SHEETS

NO.	HULL	TITLE	IDENT

REFERENCES

SIZE	FSCM NO.	WT GRP	NAVSEA DWG NO.	REV
A	53711	167	7379842	-
SCALE: AS NOTED		CODE: 243		SHEET 3 OF 12

GENERAL NOTES :

THIS SKETCH WAS DEVELOPED TO PROVIDE GUIDANCE PROCEDURES FOR REPLACING NON-BALLISTIC, WATERTIGHT OR AIRTIGHT QUICK ACTING OR INDIVIDUALLY ACTING PERSONNEL DOORS.

NOTE: *INSTALLING A DOOR AND FRAME ASSEMBLY IS A DIFFICULT PROCESS THAT REQUIRES GREAT CARE TO ENSURE SUCCESSFUL INSTALLATION. FOUR CRITICAL INSTALLATION STEPS ARE:*

- INSPECTION OF DOOR ASSEMBLY PRIOR TO INSTALLATION (TO DETECT ANY DOOR MANUFACTURER DISCREPANCIES, ORDERING DISCREPANCIES, SHIPPING DAMAGE, OR STORAGE DAMAGE).
- INSPECTION AND PREPARATION OF BULKHEAD PRIOR TO DOOR INSTALLATION (TO ENSURE ACCEPTABLE BULKHEAD FAIRNESS).
- CONTROLLED WELDING INSTALLATION PROCEDURE (TO MINIMIZE BULKHEAD AND DOORFRAME DISTORTION).
- FINAL INSPECTION OF DOOR ASSEMBLY UPON INSTALLATION (TO ENSURE WATERTIGHT/AIRTIGHT INTEGRITY).

1. INSPECTION OF DOOR ASSEMBLY:

ACCOMPLISH INSPECTION OF DOOR ASSEMBLY IMMEDIATELY UPON RECEIPT OF DOOR TO DETERMINE IF THERE ARE MANUFACTURER OR SHIPPING RELATED DISCREPANCIES AND AGAIN ON THE SHIP JUST PRIOR TO INSTALLATION IN THE BULKHEAD TO DETERMINE IF THERE ARE ANY DISCREPANCIES RESULTING FROM STORAGE AND HANDLING.

1.1. USING CURRENT DOOR DRAWINGS ENSURE THAT THE DOOR IS PROPERLY CONSTRUCTED WITH REGARDS TO MATERIAL, SIZE, SWING (LEFT OR RIGHT HAND), PRESSURE RATING, PROPER HARDWARE, DOG QUANTITY AND TYPE (QUICK ACTING OR INDIVIDUALLY DOGGED). LOW OR HIGH TYPE HINGE HEIGHT (DIMENSION FROM FACE OF DOOR FRAME TO CENTERLINE OF HINGE PIN (2-15/16 INCHES FOR LOW TYPE AND 4-17/32 INCHES FOR HIGH TYPE), SURFACE TREATMENT (i.e. WSA, POWDER COATING, ETC.), AND MANUFACTURERS LABEL PLATE.

1.2. INSPECT THE DOORFRAME FOR EXCESSIVE WARPING. THE WARPING TOLERANCE SHALL NOT EXCEED 1/8 INCH. USE THE CROSS-STRING METHOD TO CROSS DIAGONAL CORNERS AT DOOR KNIFE-EDGE; ALSO CHECK VERTICAL AND HORIZONTAL PLANES, SEE **FIGURE 5-A**. KNIFE EDGE GRINDING SHALL NOT BE USED TO CORRECT FRAME WARPING.

1.3. INSPECT FOR COMBINED WARPING BETWEEN FRAME AND PANEL. LIGHTLY HOLD DOOR PANEL CLOSED (UNDOGGED) AGAINST THE KNIFE-EDGE. GAP BETWEEN THE KNIFE-EDGE AND GASKET SHALL NOT EXCEED 1/8 INCH.

1.4. INSPECT ALIGNMENT OF DOOR PANEL WITH RESPECT TO THE DOOR-FRAME. KNIFE-EDGE SHALL CONTACT THE MIDDLE 3/5ths OF THE GASKET AROUND ENTIRE DOOR.

1.5. INSPECT POSITION OF DOGS. WHEN FULLY DOGGED, EACH DOG SHALL BE CENTERED ON THE FLAT PORTION OF THE DOG WEDGE.

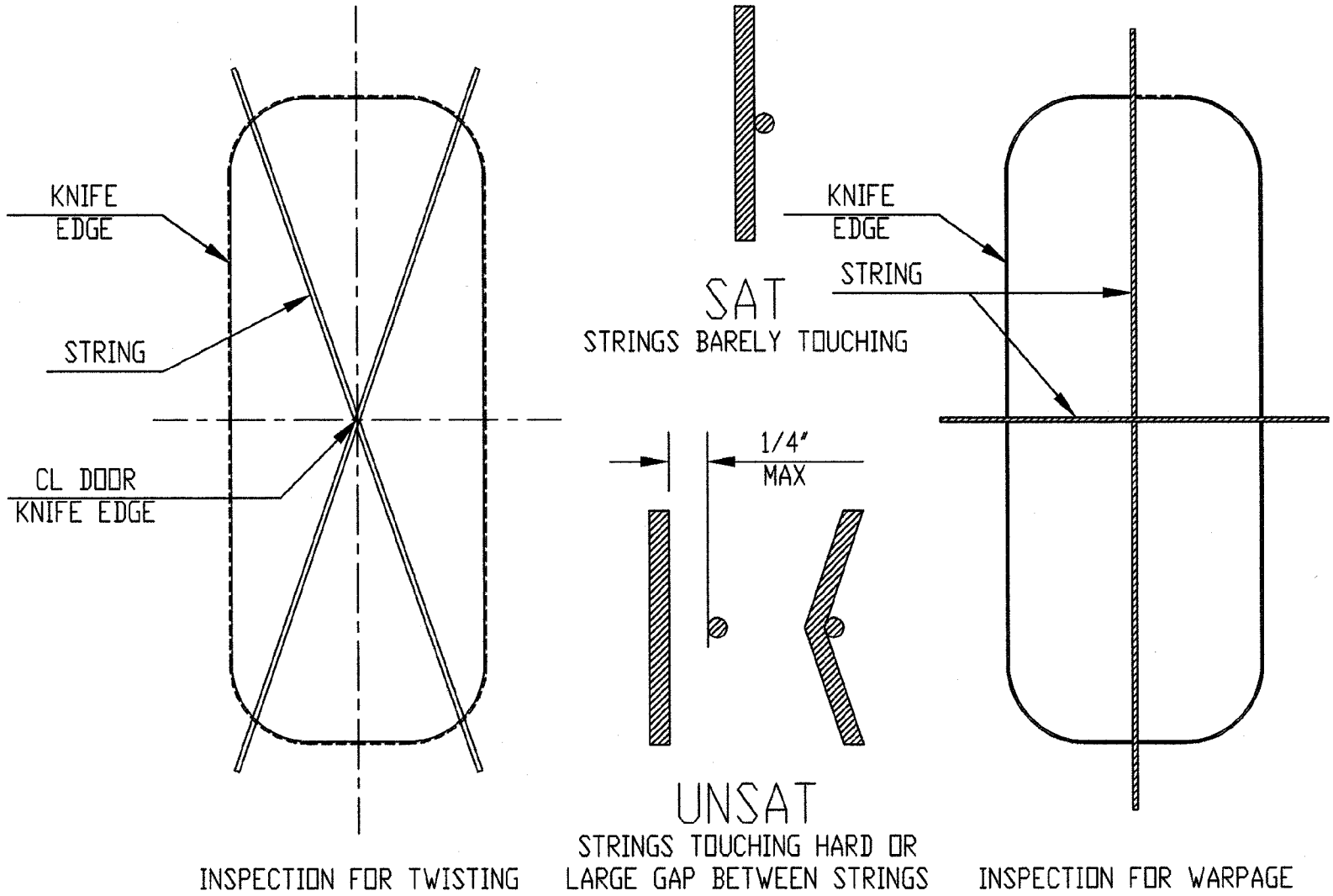

FIGURE 5-A

KNIFE EDGE INSPECTION FOR WARPAGE AND/OR TWISTING WITH STRING PULLED TAUT

SCALE: NONE

SIZE	FSCM NO.	WT GRP	NAVSEA DWG NO.	REV
A	53711	167	7379842	-

SCALE: AS NOTED | CODE: 243 | SHEET 5 OF 12

GENERAL NOTES CONTINUED:

1.6 INSPECT OPERATING HANDLES ON QUICK ACTING DOORS FOR SNUG FIT. SPRING CLIP SHALL POSITIVELY ENGAGE AND RETAIN HANDLE.

1.7 INSPECT LINKAGE ALIGNMENT, ENSURE ALL COMPONENTS ARE ATTACHED AND THAT NONE ARE MISSING OR LOOSE. LINKAGE SHALL NOT PROTRUDE INTO CLEAR OPENING WHEN IN THE FULL UNDOGGED POSITION.

1.8 INSPECT DOG LOCK NUTS OR JAM NUTS. NUTS SHALL BE STAINLESS STEEL (CRES 316) AND SPINDLE THREADS SHALL EXTEND SLIGHTLY BEYOND THE JAM OR LOCK NUT.

1.9 INSPECT HINGE AND YOKE WASHERS FOR CORRECT SIZE, MATERIAL (BRASS) AND QUANTITY (FOR HINGE PIN WASHERS, 3 WASHERS NOMINAL +/- ONE WASHER, 1/16 INCH THICK; FOR YOKE PIN WASHER, ONE WASHER, 1/8 INCH THICK).

1.10 INSPECT HINGE AND YOKE PINS. HINGE AND YOKE PINS SHALL BE BRASS.

1.11 INSPECT KNIFE-EDGE. KNIFE-EDGE SHALL BE SMOOTH AND ROUND. ENSURE KNIFE-EDGE IS NOT SQUARE OR HAS SHARP EDGES THAT COULD CUT GASKET.

1.12 INSPECT GASKET. GASKET SHALL BE SILICON RUBBER, ORANGE COLOR (IAW FEDERAL SPECIFICATION ZZ-R-765, CLASS 3B, GRADE 30). GASKET SHALL BE HELD SECURELY IN PLACE BY THE DOOR GASKET CHANNEL RETAINER LIPS. GASKET SHALL HAVE ONLY ONE BUTT JOINT AND IT SHALL BE CENTERED ON TOP OF THE DOOR.

1.13 INSPECT DOOR HANDLE AND DOG BUSHING SETSCREW. SETSCREW SHALL BE BRASS IF DOOR HAS OILITE BRONZE BUSHINGS, AND SHALL BE STAINLESS STEEL IF DOOR HAS STAINLESS STEEL OR ALUMINUM BUSHINGS.

1.14 INSPECT DOG AND OPERATING HANDLE BUSHINGS FOR CORRECT MATERIAL. OILITE BRONZE IS INSTALLED IN STEEL, STAINLESS STEEL AND ALUMINUM SLEEVES. TEFLON LINED CRES IS INSTALLED IN STEEL AND STAINLESS STEEL SLEEVES ONLY. TEFLON LINED ANODIZED ALUMINUM IS INSTALLED IN ALUMINUM SLEEVES ONLY. OILITE BRONZE BUSHINGS ARE DISTINGUISHABLE BY THEIR BRASS COLOR, TEFLON LINED ANODIZED ALUMINUM BUSHINGS ARE DISTINGUISHABLE BY THEIR GREEN COLOR, AND TEFLON LINED STAINLESS STEEL BUSHINGS ARE DISTINGUISHABLE BY THEIR SILVER COLOR.

1.15 INSPECT FOR PHYSICAL DAMAGE TO PANEL, FRAME, OPERATING MECHANISM, DOG ASSEMBLIES, AND PAINT.

1.16 INSPECT OPERATING MECHANISM, OPERATING DOOR THROUGH ONE COMPLETE UN-DOG/OPEN/CLOSE/DOG CYCLE. DOOR SHALL OPERATE SMOOTHLY.

NOTE: *THE DOOR MANUFACTURER SHALL CORRECT RELATED DEFICIENCIES. ALL DISCREPANCIES FOUND SHALL BE REPORTED IN WRITING TO THE PORT ENGINEER PRIOR TO INSTALLATION OF THE DOOR.*

GENERAL NOTES CONTINUED:

2. INSPECTION OF BULKHEAD:

2.1 INSPECT BULKHEAD CUTS FOR CORRECT LOCATION AND PROPER SIZE. BULKHEAD SHALL OVERLAP DOOR FRAME BY AT LEAST 1 ¼ INCH AROUND ENTIRE PERIMETER.

2.2 PREPARE ALL AREAS TO BE WELDED, ALL AREAS SHALL BE CLEAN AND FREE OF PAINT, SCALE, RUST, CORROSION (ALUMINUM OXIDE), DIRT, GREASE AND OIL.

2.3 THE BULKHEAD PANEL AT THE DOORFRAME SHALL BE STRAIGHT TO WITHIN 1/16 INCH, PARTICULARLY ON BULKHEADS GREATER THAN ¼ INCH THICKNESS. BEFORE FITTING THE DOOR THE BULKHEAD SHALL BE CHECKED WITH A STRAIGHT EDGE OR STRING, SEE **FIGURE 5-A**. DIAGONAL CORNERS SHOULD BE CHECKED TO DETECT TWIST.

3. DOOR INSTALLATION:

NOTE: *IT MIGHT BE NECESSARY TO REMOVE DOOR HANDLE CLIP FOR DOOR INSTALLATION.*

3.1 LAYOUT AND MARK POSITION OF DOORFRAME ON BULKHEAD. ENSURE DOORFRAME OVERLAPS BULKHEAD AT LEAST 1 ¼ INCH AROUND ENTIRE PERIMETER.

3.2 AREAS OF THE DOOR, AS WELL AS ADJACENT DECK AND BULKHEAD AREAS EXPOSED TO WELD SPATTER SHALL BE SHIELDED BY WRAPPING OR DRAPING WELDERS CLOTH AROUND THESE AREAS. THIS INCLUDES DOOR PANELS, GASKET, KNIFE-EDGE, LINKAGES, DOG SPINDLES, AND BUSHINGS.

NOTE: *SOME DOORS MAY HAVE TEFLON LINED STAINLESS STEEL OR ANODIZED ALUMINUM BUSHINGS WITH A TEMPERATURE SENSITIVE SEAL VICE BRONZE BUSHINGS. SPECIAL CARE MUST BE TAKEN WHEN ANY TYPE OF HOT WORK IS BEING PERFORMED NOT TO MELT OR DISTORT SEAL.*

3.3 WITH DOOR CLOSED AND DOGGED, POSITION DOOR ASSEMBLY ON BULKHEAD AND ALIGN WITH MARKS. CLAMP DOOR TO BULKHEAD WITH ONE OR 2 CLAMPS HOLDING DOOR FRAME TO BULKHEAD, VERIFY THERE IS NO MORE THAN A 1/16 INCH OPENING BETWEEN DOOR FRAME AND BULKHEAD. IF GAPS GREATER THAN 1/16 INCH EXIST, REMOVE DOOR AND STRAIGHTEN BULKHEAD. TACK WELD FRAME TO BULKHEAD TO ADEQUATELY SUPPORT THE DOOR. PLACE ONE (1) INCH TACK WELDS AROUND PERIMETER ABOUT EVERY 12 INCHES. TACK WELDS SHALL BE PLACED NEAR EACH DOG SLEEVE TO HELP PREVENT THE SLEEVE FROM TURNING DURING THE PRODUCTION WELDING PROCESS. OPEN THE DOOR AND TACK WELD OTHER SIDE OF DOOR IN THE SAME MANNER.

GENERAL NOTES CONTINUED:

3.4 CHOCKS MAY BE TACKED IN PLACE AT ANY TIME DURING THE INSTALLATION PROCESS. CHOCKS SHOULD NOT BE COMPLETELY WELDED UNTIL AFTER THE DOOR IS WELDED AND THE BULKHEAD PANEL AND DOORFRAME HAVE BEEN STRAIGHTENED TO WITHIN THE SPECIFIED FLATNESS.

NOTE: *THE DOOR SHOULD BE CLOSED AND DOGGED THROUGH AT LEAST HALF OF THE WELDING SEQUENCE AND PREFERABLY CLOSED AND DOGGED THROUGH THE ENTIRE WELDING SEQUENCE (DEPENDING ON ACCESSIBILITY TO THE OPPOSITE SIDE OF DOOR).*

3.5 WELD FRAME TO BULKHEAD USING PROPER WELDING PROCEDURES AND THE SEQUENCE SHOWN IN **FIGURES 9-A AND 10-A**, SHEET 9 AND 10, TO MINIMIZE WARPING OF THE DOORFRAME AND BULKHEAD. SINCE EVERY DOOR INSTALLATION IS UNIQUE, THE WELDING SEQUENCE MAY REQUIRE TAILORING TO SUIT LOCAL CONDITIONS. KEY FEATURES OF THIS SEQUENCE TO NOTE ARE:

- WELDING BEGINS IN THE CENTER OF THE DOOR, ALLOWING THE TOP AND BOTTOM OF THE DOOR TO FLOAT ON THE BULKHEAD.
- WELDING IS DONE ON THE RADIUS CORNERS LAST BECAUSE CURVED SECTIONS WILL DISTRIBUTE HIDDEN STRESS BETTER THAN STRAIGHT SECTIONS.
- WELD INCREMENTS (BLOCKS) SHALL BE NO LONGER THAN 12 INCHES TO PREVENT WARPING.
- WELD INCREMENT SEQUENCE FEATURES SKIP WELDING TO PREVENT LOCALIZED HEAT BUILD UP.
- NUMBER OF WELD INCREMENTS (BLOCKS) WILL CHANGE WITH DIFFERENT SIZE DOORS

3.6 INSPECT FOR EXCESS DISTORTION BY:

- OPENING AND CLOSING THE DOOR AND INSPECTING FOR SMOOTH OPERATION, NO BINDING.
- INSURE THERE IS NO METAL TO METAL CONTACT BETWEEN THE DOOR PANEL AND KNIFE EDGE OR DOGS.
- WHILE HOLDING THE DOOR PANEL LIGHTLY CLOSED BUT NOT DOGGED, ENSURE THERE IS NO MORE THAN 1/8 INCH GAP BETWEEN THE KNIFE EDGE AND GASKET.

NOTE: *IF ANY EXCESS DISTORTION EXIST, IT SHOULD BE CORRECTED AT THIS TIME BEFORE INSTALLING THE CHOCKS.*

3.7 INSTALL CHOCKS AND BRACKETS IAW REFERENCE "NAVSEA DRAWING 805-1362325; REINFORCEMENT FOR WT AND AT DOOR OPENINGS". CHECK FOR METAL TO METAL CONTACT AS DOOR SWINGS CLOSED.

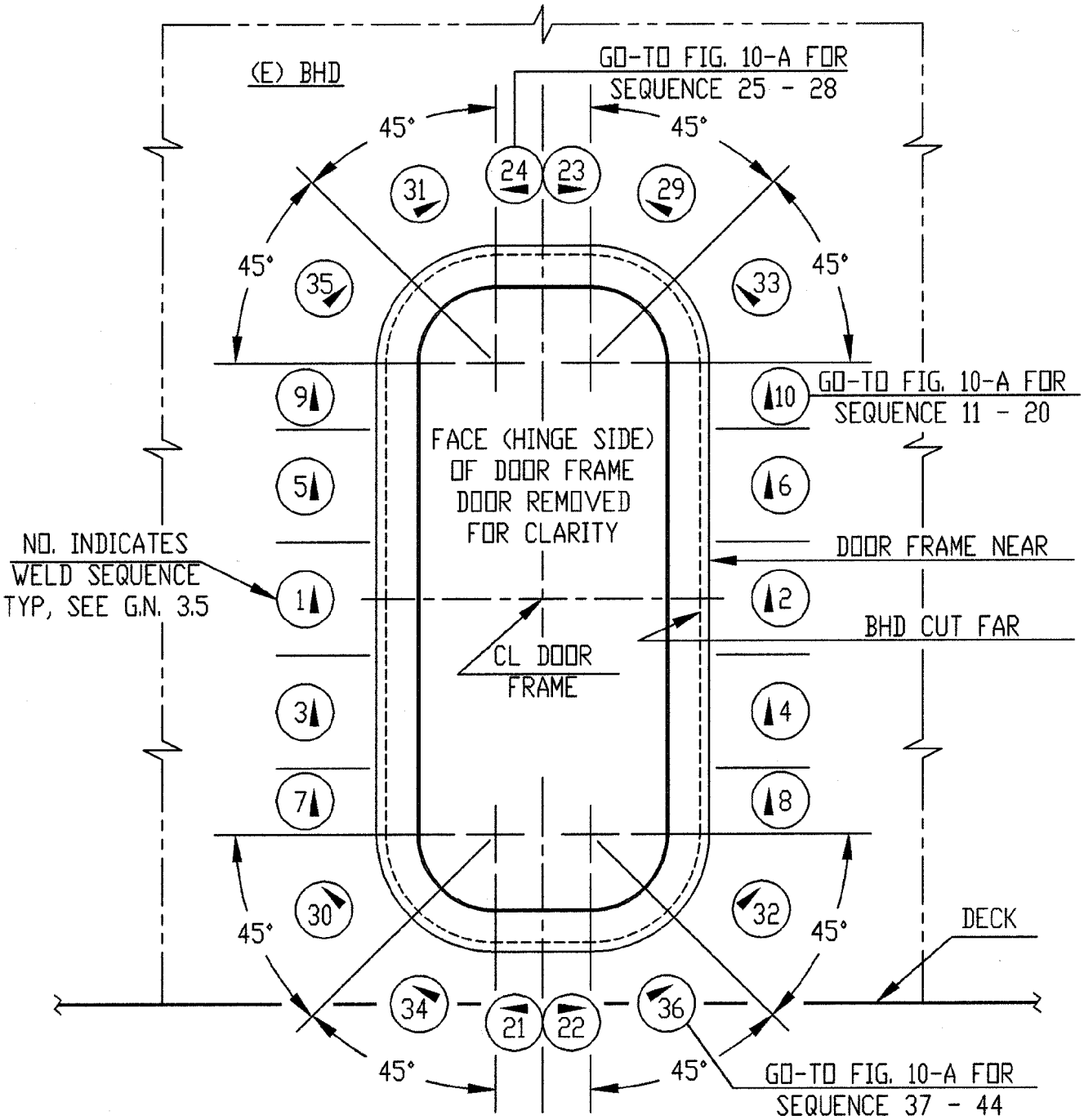

FIGURE 9-A

INSTALLATION WELDING SEQUENCE FOR
FACE (HINGE SIDE) OF DOORFRAME, SHOWING 50% OF WELDING REQUIREMENTS
SEE FIGURE 10-A FOR REMAINDER OF WELDING PATERN AND G.N. 3.5
TYPICAL 26" X 66" DOOR FRAME SHOWN
SCALE: 3/4" = 1'- 0"

SIZE	FSCM NO.	WT GRP	NAVSEA DWG NO.	REV
A	53711	167	7379842	—
SCALE: AS NOTED		CODE: 243	SHEET 9 OF 12	

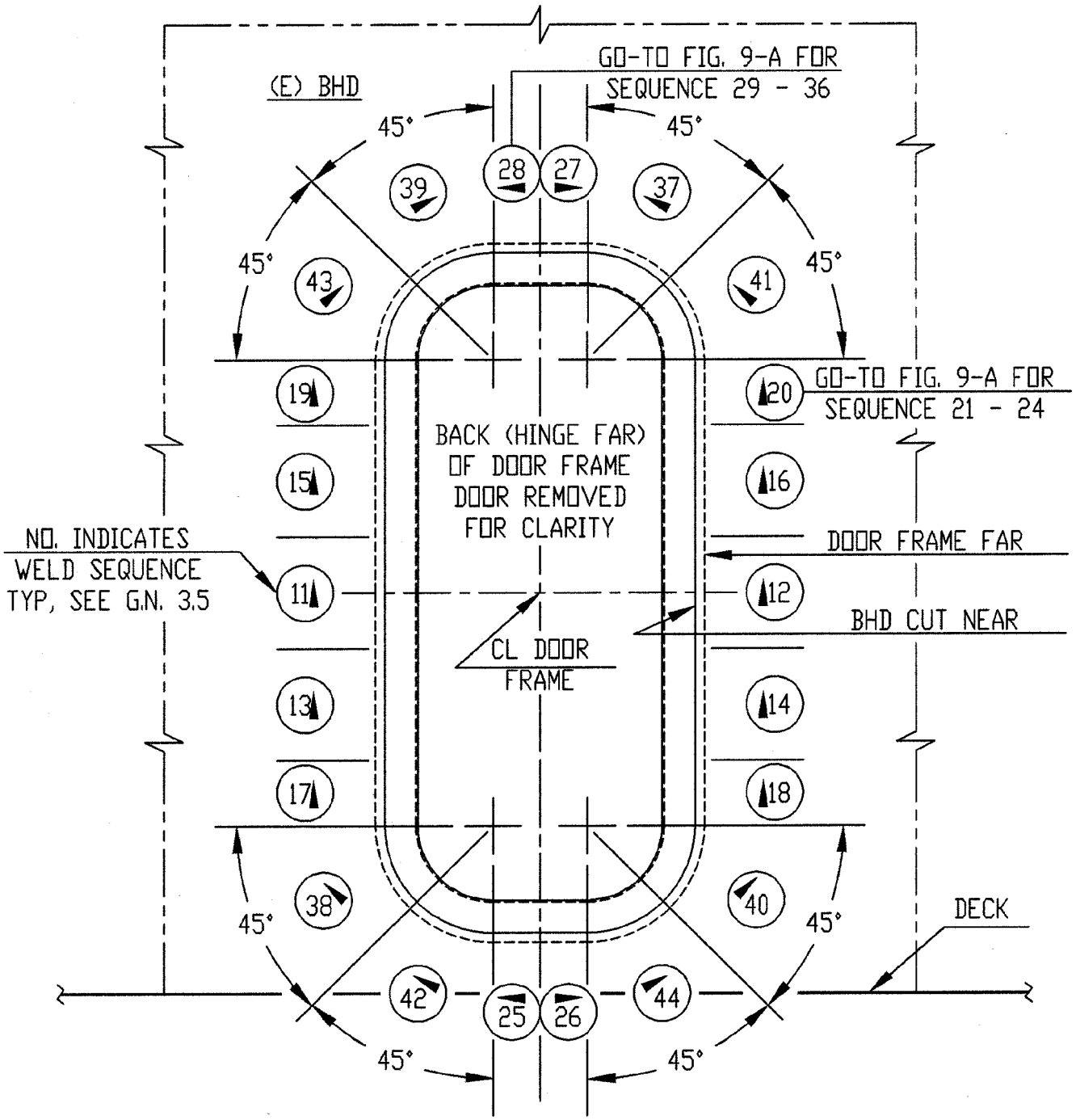

FIGURE 10-A

INSTALLATION WELDING SEQUENCE FOR
BACK (HINGE FAR SIDE) OF DOORFRAME, SHOWING 50% OF WELDING REQUIREMENTS
SEE FIGURE 9-A FOR INFO NOT SHOWN & REMAINDER OF WELDING PATERN AND G.N. 3.5
TYPICAL 26" X 66" DOOR FRAME SHOWN
SCALE: 3/4" = 1'- 0"

SIZE	FSCM NO.	WT GRP	NAVSEA DWG NO.	REV
A	53711	167	7379842	–
SCALE: AS NOTED		CODE: 243		SHEET 10 OF 12

GENERAL NOTES CONTINUED:

3.8 ADJUST DOGS FOR 1/8 INCH GASKET COMPRESSION AND CHALK TEST FINISHED DOOR. 1-1/8 TURNS OF THE DOG NUT ACHIEVES A 1/8 INCH GASKET COMPRESSION.

3.9 INSTALL HASPS, LOCKS, HOOKS, HANDLE RETAINING CLIPS, AND STOPS AS REQUIRED.

3.10 PAINT CLOSURE IN ACCORDANCE WITH NSTM 631, VOLUME 3.

4. FINAL INSPECTION:

4.1 INSPECT WELDING. WELDING SHALL BE COMPLETE AND FREE FROM DEFECTS.

4.2 INSPECT GASKET AND KNIFE-EDGE ALIGNMENT. IN THE UNDOGGED POSITION WITH DOOR HELD SLIGHTLY CLOSED BY HAND, THE GAP (IF ANY) BETWEEN THE GASKET AND KNIFE-EDGE SHALL NOT EXCEED 1/8 INCH.

4.3 INSPECT DOOR ALIGNMENT AND WATERTIGHT/AIRTIGHT INTEGRITY. CHALK TEST DOOR AND ENSURE THERE IS PROPER SEALING AROUND ENTIRE PERIPHERY AND THAT KNIFE-EDGE CONTACTS THE MIDDLE 3/5ths PORTION OF THE GASKET.

4.4 INSPECT DOOR OPERATION. OPERATE DOOR THROUGH ONE COMPLETE UN-DOG/OPEN/CLOSE/DOG CYCLE AND ENSURE THAT DOOR OPERATES SMOOTHLY.

4.5 INSPECT HASPS, STAPLES, HOOKS AND STOPS LOCATIONS. LOCATIONS SHALL BE IN ACCORDANCE WITH THE DRAWINGS.

4.6 INSPECT FOR PROPERLY INSTALLED DEAD LIGHT AND FIXED LIGHTS IF REQUIRED.

4.7 INSPECT DOG HANDLE RETAINING CLIPS. DOGGING PIPE CLIPS SHALL BE WELDED TO BULKHEAD IN CLOSE PROXIMITY TO DOOR (INDIVIDUALLY DOGGED DOORS ONLY).

4.8 INSPECT GASKET. GASKET SHOULD BE HELD SECURELY IN PLACE BY GASKET CHANNEL RETAINING LIPS AND THERE SHALL BE ONLY ONE GASKET BUTT JOINT LOCATED AT THE TOP OF THE DOOR.

4.9 INSPECT THE KNIFE-EDGE. KNIFE-EDGE SHALL BE SMOOTH WITHOUT NICKS, CRACKS, BURRS, OR SHARP EDGES. STAINLESS STEEL KNIFE-EDGES SHALL BE SMOOTHED WITH ALUMINUM OXIDE ABRASIVE CLOTH GRIT 320.

4.10 INSPECT ANODIZED ALUMINUM BUSHINGS AND STAINLESS STEEL BUSHINGS. DISASSEMBLE ONE DOG ASSEMBLY AND ENSURE FLANGE BUSHING SEALS ARE NOT DAMAGED DUE TO WELDING. ENSURE SILICON IS PRESENT, IF SILICON IS NOT PRESENT, DISASSEMBLE ALL DOGS AND DOOR HANDLES AND INSTALL SILICON.

4.11 INSPECT FOR STRING AND STICK PACKING. ON DOORS WITH OILITE BRONZE BUSHINGS, ENSURE THAT STRING AND STICK PACKING HAS BEEN INSTALLED. IF STRING AND STICK PACKING IS NOT PRESENT, DISASSEMBLE ALL DOGS AND DOOR HANDLES AND INSTALL STICK PACKING AND STRING PACKING.

GENERAL NOTES CONTINUED:

4.12 INSPECT DOOR DOG CONTACT WITH DOG WEDGES. DOGS SHALL CLEAR SHOULDER OF WEDGE WHEN DOGGING AND SHALL REST ON THE FLAT SURFACE OF THE WEDGE WHEN DOGGED. DOG NUTS SHALL BE ADJUSTED AS NECESSARY TO ENSURE PROPER DOG CONTACT.

4.13 INSPECT CLOSURE OPENING. ENSURE THE OPERATING LINKAGE ON QUICK ACTING DOORS AND THAT DOGS ON INDIVIDUALLY ACTING DOORS DO NOT PROTRUDE INTO THE CLOSURE OPENING WHEN DOOR IS IN THE OPEN POSITION.

4.14 INSPECT DOOR FINISH. PAINT SHALL BE COMPLETE AND FREE FROM DAMAGE.

4.15 INSPECT FOR PAINT OVERSPRAY. GASKETS, KNIFE EDGES, SEALING SURFACES, DOG WEDGES, BUSHINGS, LABEL PLATES, SPINDLES, JAM NUTS AND ALL OTHER SURFACES NOT REQUIRED TO BE PAINTED SHALL BE FREE OF PAINT AND OVERSPRAY.