Chapter 8 – Engineering and Technical Oversight

Table of Contents

8.1 Introduction 8-5
8.1.1 Scope 8-5

8.2 Engineering Organization 8-6
8.2.1 Role of SUPSHIP Engineering 8-6
8.2.2 Functional Organization 8-6

8.3 Technical Authority 8-7
8.3.1 Exercise of Technical Authority 8-8

8.4 Major Phases and Key Processes 8-9
8.4.1 Ship/System Specification Development 8-10
8.4.2 Design 8-10
8.4.2.1 Engineering Quality Assurance Program 8-11
8.4.2.2 Ship Design Detail Drawing Review and IPT Participation 8-11
8.4.2.3 Oversight of the Shipbuilder's Configuration Management Program 8-12
8.4.2.3.1 Change Authorization 8-13
8.4.2.3.2 Departure Authorization 8-14
8.4.2.4 Assessment of Detailed Design Readiness to Support Production 8-14
8.4.2.5 Equipment Qualification Program Support 8-14
8.4.2.5.1 Participation in Factory Acceptance and First Article Testing 8-15
8.4.2.6 Weight and Moment Control 8-15
8.4.2.7 Facility Certification Support for Dry Docks, Launch Ways, Weapons Handling, Etc. 8-15
8.4.2.7.1 Dry Docks and Launch Ways 8-16
8.4.2.7.2 Ammunition and Weapons Handling 8-17
8.4.3 Construction 8-18
8.4.3.1 Technical Problem Resolution 8-18
8.4.3.1.1 Disposition of Non-Conformances 8-18
8.4.3.1.1.1 Testing Non-Conformances 8-20
8.4.3.1.1.2 Assessment of Aggregate Affect 8-20
8.4.3.1.2 Oversight of Shipbuilder Technical Problem Resolution 8-20
8.4.3.1.3 Coordination of Government Responsible Technical Issue Resolution 8-21
8.4.3.1.4 Resolution of Technical Issues Involving Other Regulatory Bodies 8-21
8.4.3.1.5 General Problem Resolution and Technical Support 8-22
8.4.3.2 Oversight of Shipbuilder Production and Engineering Procedures 8-22
8.4.3.3 Technical Support for Certification Programs and Systems (SUBSAFE, Fly-by-Wire, DSS/SOC, etc.) 8-22
8.4.3.3.1 Critical Safety Item (CSI) Source Approval 8-24
8.4.3.4 Technical Support for Key Events 8-25
8.4.3.5 Provide Project Engineering Support 8-26

8.4.3.6 Technical Support for Docking and Ship Movement Events 8-27
8.4.3.7 Oversight of Shipbuilder's Module Transportation and Ship Movement Facilities 8-28
8.4.3.7.1 Special Lift Oversight 8-29
8.4.3.8 Shock Installation Inspection Support 8-29
8.4.3.9 Coordination and Support for Systems Certification 8-30
8.4.3.10 Technical Support for Industrial, Environmental and Safety Compliance Issues 8-30
8.4.3.11 Review of Integrated Logistics Support (ILS) Products 8-31
8.4.3.12 Coordination of Technical Authority for Alteration Installation Teams (AITs)8-31
8.4.4 Test 8-32
8.4.4.1 Technical Authority Oversight of Test Programs 8-32
8.4.4.2 Review of Test Requirements, Procedures, Data, and Problem Resolution 8-33
8.4.4.3 Participation in Test Witnessing 8-33
8.4.4.4 Test Team/Test Task Group 8-33
8.4.4.5 Test and Key Event Certifications 8-35
8.4.5 Delivery 8-36
8.4.5.1 Delivery Certification (Conventionally-Powered Ships) 8-36
8.4.5.2 Delivery Certification (Nuclear-Powered Ships) 8-36
8.4.6 Post-Delivery 8-38
8.4.7 In-Service Engineering Support 8-38
8.4.7.1 Ship Class Technical Issue Resolution 8-38
8.4.7.2 Planning Yard 8-39
8.4.7.2.1 Oversee the Technical Adequacy of Shipbuilder's Planning Yard Products 8-39

Appendix 8-A: Acronyms 8-41

References

(a) NAVSEAINST 5400.97C, Virtual SYSCOM Joint Instruction, VS-JI-22A, Engineering and Technical Authority Policy

(b) NAVSEAINST 5400.95F, Waterfront Engineering and Technical Authority Policy

(c) SECNAVINST 5400.15C, Department of the Navy (DON) Research and Development, Acquisition, Associated Life-Cycle Management, and Logistics Responsibilities and Accountability

(d) NAVSEAINST 5400.111A, NAVSEA Engineering and Technical Authority Policy

(e) NAVSEAINST 4130.12B, Configuration Management (CM) Policy and Guidance

(f) NAVSEAINST 5000.9, Naval SYSCOM Systems Engineering Policy

(g) NAVSEAINST 11420.1B, Drydocking and Launching Facilities Safety Certification for U.S. Navy Ships

(h) MIL-STD-1625, DoD Standard Practice Safety Certification Program for Drydocking Facilities and Shipbuilding Ways for U.S. Navy Ships

(i) OPNAVINST 8020.14A, Department of the Navy Explosives Safety Policy

(j) NAVSEA OP4, Ammunition and Explosives Safety Afloat

(k) NAVSEA OP5, Ammunition and Explosives Ashore Safety Regulations for Handling, Storage, Production, Renovation & Shipping

(l) COMFLTFORCOMINST 4790.3, Joint Fleet Maintenance Manual (JFMM)

(m) Uniform Industrial Process Instruction (UIPI) 0900-453, Critique and Problem Analysis Matrix Processes

(n) NAVSEA 0924-062-0010, Submarine Safety (SUBSAFE) Requirements Manual

(o) NAVSEA SS800-AG-MAN-010/P-9290, System Certification Procedures and Criteria Manual for Deep Submergence Systems

(p) NAVSEA T9044-AD-MAN-010, Submarine Fly-by-Wire Ship Control Systems Requirements Manual

(q) NAVSEAINST 9078.1, Naval Ships' Critical Safety Item Program

(r) NAVSEAINST 9078.2, Naval Ships’ Critical Safety Item (CSI) Program Technical Requirements

(s) Navy Regulations

(t) S9086-7G-TM-010/CH-997, Docking Instructions and Routine Work in Drydock

(u) NAVSEAINST 9072.1A, Shock Hardening of Surface Ships

(v) OPNAVINST 5102.1D, Navy & Marine Corps Mishap and Safety Investigation, Reporting, and Record Keeping Manual

(w) NAVSEA Technical Specification TS9090-310F, Alterations to Ships Accomplished by Alteration Installation Teams

(x) S9092- AC-ADM-010/ITPAM, Industrial Test Program Administration Manual (ITPAM)

(y) S9002-AK-CCM-01 0/6010, Industrial Ship Safety Manual for Submarines

(z) INSURVINST 4730.3, Trials of Surface Ships

(aa) OPNAVINST N9080.3G, Procedures for Tests and Trials of Naval Nuclear Powered Ships Under Construction, Modernization, Conversion, Refueling and Overhaul

(bb) SL720-AA-MAN-010, Fleet Modernization Manual

(cc) SL720-AA-MAN-030, Navy Modernization Process Management and Operational Manual (NMP-MOM

(dd) NAVSEA S9AA0-AB-GOS-010, General Specifications for Overhaul of Surface Ships (GSO)

(ee) NAVSEA 0902-LP-018-2010, General Overhaul Specifications for Deep Diving SSBN/SSN Submarines

List of Figures

Figure 8-1. Notional SUPSHIP Engineering Department Functional Organization 8-7

Figure 8-2. Technical Authority Pyramid 8-8

Chapter 8 – Waterfront Engineering and Technical Authority

8.1 Introduction

This chapter discusses engineering oversight in support of contracts for the construction, conversion, overhaul, and repair of ships, submarines and craft. It addresses waterfront technical authority and the roles and responsibilities of the Engineering Department through major phases of new construction, conversion and repair.

The primary goal of the SUPSHIP engineering oversight function is to effectively monitor and influence contractor engineering and waterfront technical performance to ensure that Navy ships and submarines meet performance and quality requirements and that delivery occurs on time and within cost. Engineering oversight is imperative to successful performance of ship design and construction contracts.

SUPSHIPs perform contract administration and oversight in their role as a Contract Administration Office (CAO) in accordance with Federal Acquisition Regulations (FAR) subpart 42.302 and the Defense Acquisition Regulations Supplement (DFARS). In support of this function, the Engineering Department provides engineering and technical services in major phases of acquisition including Ship Specification Development, Design, Construction, Test, Post-Delivery, and In-Service functions. Ship specification development and design services are provided in support of the NAVSEA Ship Design Manager (SDM). The main function of the SUPSHIP Engineering Department is waterfront oversight during the construction, conversion or maintenance and testing phases with a support role in post-delivery. These various roles and responsibilities are discussed in more detail in section 8.4.

The head of the Engineering Department reports to SUPSHIP command management, ultimately responsible to SEA 04, with additional responsibilities as a warranted Waterfront Chief Engineer (CHENG) to the Chief Engineer of the Navy, SEA 05. Technical authority policy and guidance, including the warranting of qualified individuals, is provided at the systems command (SYSCOM) level by reference (a), NAVSEAINST 5400.97C (Virtual SYSCOM Joint Instruction, VS-JI-22A), Virtual Syscom Engineering and Technical Authority Policy. Reference (b), NAVSEAINST 5400.95F**, Waterfront Engineering and Technical Authority Policy, establishes engineering and technical authority policies for SUPSHIPs and other NAVSEA activities. Section 8.3 of this chapter provides a detailed discussion of a Waterfront CHENG's responsibilities.

8.1.1 Scope

In general, SUPSHIP engineering authority extends to all technical and engineering matters associated with contracts administered by a SUPSHIP. This will typically include hull, mechanical, electrical/electronic, propulsion, and combat systems, but does not apply to those nuclear propulsion components and systems that fall under the cognizance of SEA 08.

** Denotes secure hyperlink requiring NMCI/CAC access

It also excludes systems that are procured under contracts for which SUPSHIP is not the Administrative Contracting Officer (ACO), such as the Aegis weapons system.

In some cases, NAVSEAINST 5400.95F** assigns technical authority to a SUPSHIP CHENG outside of the ACO support role, for instance, over a Fleet Maintenance Activity (FMA). In this role the utilization of resources within the SUPSHIP Engineering Department is recognized as mission-funded.

8.2 Engineering Organization

8.2.1 Role of SUPSHIP Engineering

The Engineering Department provides technical expertise in all facets of shipbuilding as required by NAVSEAINST 5400.95F**, and may include support to multiple shipbuilding and repair programs at any one time. The major function of SUPSHIP Engineering is to support waterfront activities during construction, conversion or maintenance and testing phases, but the organization also acts in a support role to the SDM during specification development and design phases. The primary roles and responsibilities in this effort include:

- Resolving technical problems
- Processing departures
- Overseeing shipbuilder engineering and technical product quality
- Overseeing shipbuilder production/engineering procedures
- Supporting key construction and test events

Additional roles and responsibilities are enumerated in section 8.4. SUPSHIP Engineering, in conjunction with other SUPSHIP departments, oversees the shipbuilder's execution of the contract to insure that a platform is built to contractual requirements.

8.2.2 Functional Organization

The organizational structure needed to support the Engineering Department mission is basically consistent across the SUPSHIPs, but is not identical due to the diverse nature of the products, contracts and contractors. One consistent aspect of the engineering organization is that the department head is warranted as a waterfront chief engineer by a SEA 05 Deputy Warranting Officer (DWO) who reports to the Chief Engineer of the Navy, SEA 05. The engineering organization is staffed with degreed engineers and experienced technicians across the many disciplines involved in ship design and construction, including mechanical, structural, electrical, electronics, and naval architecture. These disciplines are further divided into more discrete functions such as piping, mechanical systems, test, structures, etc. This organizational structure supports work on all contracts for each project and is enhanced in this respect by the implementation of dedicated Project Engineers (see section 8.4.3.5). Figure 8-1 depicts a notional engineering organization. Subsequent

** Denotes secure hyperlink requiring NMCI/CAC access

sections will further describe engineering department major functions and key processes (section 8.4).

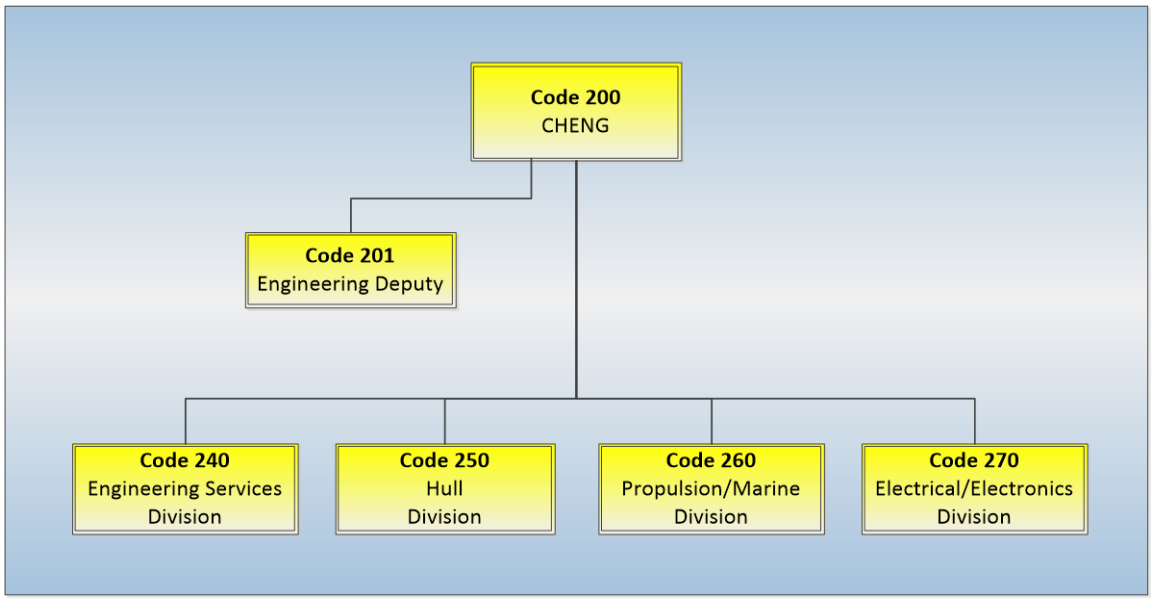

Figure 8-1. Notional SUPSHIP Engineering Department Functional Organization

8.3 Technical Authority

As identified in reference (c), SECNAVINST 5400.15C, Department of the Navy (DON) Research and Development, Acquisition, Associated Life-Cycle Management, and Logistics Responsibilities and Accountability, the Commanders of the Systems Commands (SYSCOMs) are responsible for serving as the technical authority and operational safety and assurance certification authorities for their assigned areas of responsibility. In support of this responsibility, COMNAVSEA has established roles and responsibilities in NAVSEAINST 5400.97C, Virtual Syscom Engineering and Technical Authority Policy, to include Technical Authority with SEA 05 as the NAVSEA CHENG. Further delegation is addressed in NAVSEAINST 5400.95F**, Waterfront Engineering and Technical Authority Policy. Figure 8-2 provides a graphical depiction of the hierarchy of technical authority within NAVSEA.

** Denotes secure hyperlink requiring NMCI/CAC access

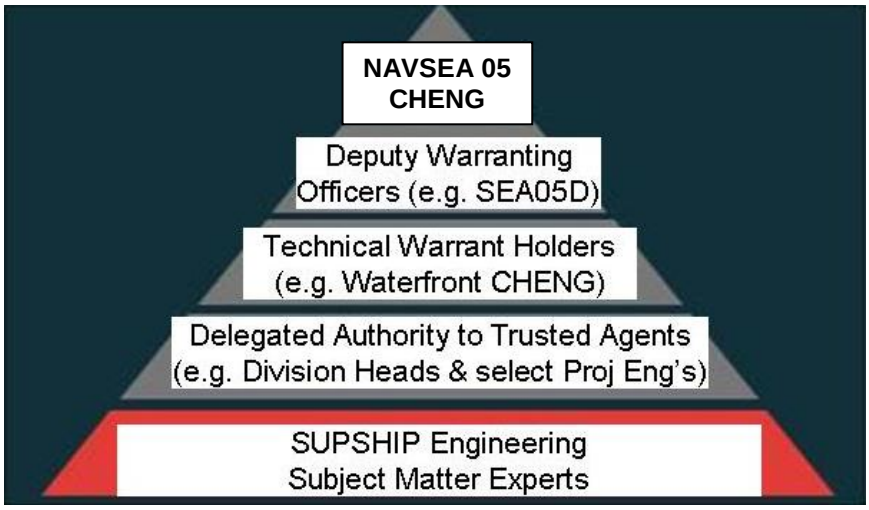

Figure 8-2. Technical Authority Pyramid

8.3.1 Exercise of Technical Authority

NAVSEAINST 5400.95F**, Waterfront Engineering and Technical Authority Policy, establishes waterfront engineering and technical authority for NAVSEA activities and specifies the accountability and responsibilities of the Waterfront CHENGs. For SUPSHIP Waterfront CHENGs, this entails:

1. Accountability to the Supervisor, their Deputy Warranting Officer, the NAVSEA Chief Engineer, and COMNAVSEA for all engineering and technical authority for their assigned activities, except for matters related to design and integration for which the SDM is accountable.

2. Responsibility and accountability for all engineering and technical decision-making accomplished by their assigned activities for:

    a. Setting local technical standards

    b. Providing technical area expertise

    c. Ensuring safe and reliable operations

    d. Ensuring effective and efficient systems engineering

    e. Employing judgment in making unbiased technical decisions

    f. Providing stewardship of engineering and technical capabilities

    g. Maintaining accountability and technical integrity

3. Authority to determine conformance and non-conformance to specifications, determine the significance of non-conformances and disposition them, and make

** Denotes secure hyperlink requiring NMCI/CAC access

decisions where it is clear that no higher-level technical guidance or requirement is necessary.

4. Interface with the Ship Design Manager (SDM). For ship construction and CVN Refueling Complex Overhauls (RCOHs), the SDM is responsible and accountable for technical oversight of the design. This includes working as a team with the SUPSHIP CHENG and other Technical Warrant Holders (TWHs) and subject matter experts to develop and approve the detailed ship design. During execution of ship construction and CVN RCOHs, the Waterfront CHENG is the technical lead responsible for technical resolution of construction (or overhaul) non-conformances and work deferrals, and is responsible and accountable to adjudicate them in accordance with NAVSEAINST 5400.95F** and any program implementing documents (e.g., Drawing Approval Procedure (DAP), Engineering Management Plan (EMP), Availability Completion Plan, etc.). The SDM is a first-line resource for the Waterfront CHENG when questions arise that are beyond the scope of the Waterfront CHENG's Engineering Department or require NAVSEA action.

5. Construction Design Yards, Planning Yards and Planning Activities may be designated as engineering agents and delegated sufficient engineering responsibilities to perform the assigned mission. The policy for the selection, assignment, responsibilities, tasking, and appraisal of engineering agents is contained in reference (d), NAVSEAINST 5400.111A**, NAVSEA Engineering and Technical Authority Policy.

8.4 Major Phases and Key Processes

This section describes the key SUPSHIP Engineering Department processes organized by the ship acquisition phase in which they first occur, although many of these processes occur across multiple phases. For the purposes of this chapter, the acquisition phases are defined by the major function being performed and cover the full life cycle of a ship class, including:

- Ship/System Specification Development
- Design
- Construction
- Test
- Delivery
- Post Delivery
- In-Service Engineering Support

** Denotes secure hyperlink requiring NMCI/CAC access

8.4.1 Ship/System Specification Development

The SUPSHIP Engineering Department has the expertise to contribute to the initial phases of platform acquisition. NAVSEAINST 5400.95F** specifies the support role of the Waterfront CHENG in platform design efforts, including ship specification development and detailed design to the extent practicable. While the SDM is responsible and accountable for technical oversight of the design, the Waterfront CHENG, along with other technical warrant holders and subject matter experts, act as a team to develop and approve the detailed ship design. The value added to this process by the waterfront engineering organization is derived from considerable knowledge and experience in the constructability and testing of designs through lessons learned on previous platforms. Furthermore, SUPSHIP involvement in specification development works to insure that a knowledgeable engineering staff is ready and available at the shipyard to carry out the technical responsibilities of contract administration for construction, test and delivery of platforms.

SUPSHIP Engineering may participate in the specification development phase through specification review and comment validation. Specification review includes both shipbuilding specifications and, when applicable, specifications for engineered components. The SDM assesses comments from multiple organizations and includes those applicable in an approval letter to the design contractor. In some cases, the SDM may rely on the local SUPSHIP Engineering organization to validate proper incorporation of all comments into the specification.

In addition to ship specification development, SUPSHIP Engineering may participate in the development of individual military specifications. This is done through the Standards Improvement Board (SIB) which submits individual specification updates to the CHENGs for comment on an ongoing basis. The CHENGs can opt to contribute to the review or not, depending on the applicability of the specification to responsible platforms and the availability of resident expertise. The CHENG should comment, however, on any input provided by a contractor under SUPSHIP cognizance.

8.4.2 Design

As stated above, the SUPSHIP CHENGs have the responsibility and accountability for all engineering, technical work and technical support executed by the shipbuilder and other activities, except for matters related to design and integration under the responsibility of the SDM. In support of the SDM, however, SUPSHIP Engineering may participate in design reviews, working groups and in the review of the detailed design products. The extent of participation is determined by programmatic requirements or, in the absence of such, to the extent practicable as dictated by engineering workload and available resources. The level of mandatory participation, as defined by programmatic requirements, must be established early in the program's development phase to allow for adequate resource planning and appropriate funding.

Generally, SUPSHIP Engineering reviews all design products requiring government approval, and audits those that do not. Participation in the design phase allows engineers to

** Denotes secure hyperlink requiring NMCI/CAC access

become familiar with the design prior to the start of construction and provides an opportunity to apply waterfront lessons learned to the design process. To this end, it is important that the SDM and CHENG work closely to leverage off each other's resources. In the absence of programmatic requirements documents, development of a written Engineering Management Plan is encouraged to establish lines of responsibility for the various aspects of the design process. The purpose of the Engineering Management Plan is to establish and communicate an approach for managing the government's technical oversight of the Detail Design and Construction (DD&C) of ships and delineate workload sharing between SDM and SUPSHIP CHENG.

8.4.2.1 Engineering Quality Assurance Program

The Engineering Quality Assurance (EQA) Program is a supplement to the Contract Administration Quality Assurance Program (CAQAP) that assesses the technical quality of contractors' engineering and technical products. The EQA program and associated processes shall be formally documented in local instructions or procedures.

The EQA Program will provide for:

- Monitoring of and reporting on the quality of the shipbuilder's engineering and design technical data products
- Evaluation of the contractor's Technical Product Quality program and Quality Management System (QMS) policies and procedures for compliance with contract requirements
- Identification, trending, analyzing, and improving shipbuilder engineering technical products

The EQA program is data driven and metrics are compatible with shipbuilder metrics to ensure deficiency resolutions are readily actionable. Metrics are derived from products reviewed for government approval or via product audit and are formally reported. The report provides a summary of significant audit findings and trends. The ultimate goal of the EQA program is timely identification of substandard process trends to minimize future occurrences.

8.4.2.2 Ship Design Detail Drawing Review and IPT Participation

The CHENG and SDM share responsibility for reviewing and monitoring the ship's design and detail design drawings and ensuring an appropriate level of naval architects and engineering personnel are available for this function.

Ship design personnel utilize specialized design and engineering software to support computer modeling, engineering analysis and finite element analysis. They also develop projected weight reports, prepare schematics, provide detailed drawings, develop lofting packages, identify Long Lead Time Material (LLTM) requirements, develop Material

Requirements Listings (MRLs), etc. The shipbuilder's management team will typically develop an Integrated Master Schedule (IMS) for design product delivery and fabrication that supports overall program scheduling requirements. The design products are reviewed as early as possible by the production planning team and shop personnel to help develop the production processes and shop floor practices and construction plans for erecting the ship.

As part of the Navy review team, SUPSHIP Engineering may be asked to support reviews of 3D models of new ship designs and baseline upgrade designs. SUPSHIP engineers provide valuable insight into ship construction processes and methods, inspection requirements, test execution considerations, lessons learned from previous ship class designs, and operation and maintenance factors that can be affected by design decisions.

As established by programmatic requirements SUPSHIP engineering personnel may participate on Integrated Product Teams (IPTs), including System Integration Teams (SITs), Major Area Teams (MATs) and Major Area Integration Teams (MAITs). In addition, they review the shipbuilder's engineering products and drawings and assess the shipbuilder's compliance with the contract's technical and performance specifications.

8.4.2.3 Oversight of the Shipbuilder's Configuration Management Program

The Configuration Management (CM) program ensures that the initial design of a ship is fully documented in the design database and drawings, and that changes to the design during the life of the ship are fully documented. The change process is governed by various procedures and requirements, such as ship specifications, drawing approval procedures, etc. These changes may be changes to the design as authorized by the Program Manager (PM) or changes from the design baseline as a result of non-conforming, as-built conditions. All changes are reviewed by the appropriate organizations (projects, planning and/or engineering) and controlled by the program manager's office. A detailed discussion on configuration management can be found in Appendix 5-D.

Depending on the acquisition program, SUPSHIP Engineering may review technical documents such as initial design drawings, component specifications and test procedures, to verify that the proposed as-designed ship configuration fulfills the intent of the design and is technically acceptable. As approved by the SDM, changes to the as-designed ship configuration may be accomplished using various design change alteration procedures (discussed below) and drawings, some of which may be reviewed and approved by SUPSHIP Engineering as the applicable approval authority.

During ship construction, the configuration of the ship may change due to a component or system non-conformance to required specifications. These as-built non-conformances are documented using local procedures and the governing change process and evaluated by the appropriate approval authority, which may be SUPSHIP or NAVSEA, to determine the acceptability of the non-conforming condition. The non-conformance is reviewed for technical integrity and soundness and to assess the impact on the life-cycle logistics of the component or system. Non-conformances that require modification of existing life-cycle elements, such as operating and maintenance procedures, technical manuals, spare parts, training, etc., must be tracked and entered into the ship's configuration database to ensure

procedures and hardware (for example, spare parts and supporting equipment) are available and maintained for the life of the ship.

Formal audits of the contractor's configuration control system may be conducted to verify the system accurately reflects the as-built condition of each item. This confirmation of system accuracy provides increased assurance that unexpected increases in life-cycle costs will be minimized.

8.4.2.3.1 Change Authorization

SUPSHIP Engineering will technically review changes, including contract specification change authorizations and drawing changes or revisions. If requested, Engineering will assist the SUPSHIP Contracts Department in negotiating or participating in the development of a Technical Advisory Report (TAR). This would involve the review of man-hours and material estimates.

Contract changes may include, but are not limited to, Specification Chance Notices (SCNs), Specification Change Proposals (SCPs), Engineering Change Proposals (ECPs), Engineering Change Notices (ECNs), Headquarters Modification Requests (HMRs), and Field Modification Requests (FMRs). Some SUPSHIPs also participate in Fiscal Year Upgrades, Flight Upgrade ECPs, and Fiscal Year Design Budget Changes.

Drawing changes are generally governed by contractual documents, such as a Drawing Approval Procedure (DAP) or equivalent. Drawing changes can be class-wide or specific to a block of ships in a class; therefore, drawing indices must be maintained for each individual ship. The role of the SUPSHIP Engineering Department is to review these change documents for adequacy of technical content and, in the case of drawing changes, adherence to specification requirements to ensure configuration integrity is maintained through contractor audits as described above. Additionally, the subject matter experts and systems engineers ensure the changes are cost-effective and producible and meet program objectives.

Some SUPSHIPs participate in processing Value Engineering Change Proposals (VECPs), also known as Cost Reduction Candidates, which can be written by Industry, SUPSHIPs, TWH, Program Executive Office (PEO) IWS, PEO C4I, and the Program Office. The SUPSHIP Engineering reviews the technical data packages to ensure that the proposal meets the contractual, technical, design, and production requirements, as well as lifecycle cost savings for the program. VECPs potentially can reduce costs against several programs.

In addition to ensuring technical adequacy of individual changes and departures, the accounting, control and monitoring of changes and departures are aspects of configuration management performed by SUPSHIP in cooperation with the Program Manager as outlined in reference (e), NAVSEAINST 4130.12B, Configuration Management (CM) Policy and Guidance. Unnecessary changes put contract completion within allocated funding at risk. The establishment of effective local procedures, the training of personnel to carry out the procedures, and effective supervision will result in the approval of only necessary and

beneficial changes based on full knowledge of the impact of the changes on cost and delivery schedule and timely implementation of such changes.

8.4.2.3.2 Departure Authorization

SUPSHIP Engineering will technically review departures from specification or drawing requirements. Departures are normally in the form of a deviation and are generally applicable to only one ship. They constitute the as-built configuration of a ship and are liabilities against specification or drawing requirements. To maintain configuration management, these liabilities must be coupled to the departed specification or drawing. The role of the SUPSHIP Engineering Department is to review and/or approve departures for technical adequacy in accordance with programmatic and technical authority requirements. See section 8.4.3.1.1, Disposition of Non-Conformances, for more information.

8.4.2.4 Assessment of Detailed Design Readiness to Support Production

Reference (f), NAVSEAINST 5000.9**, Naval SYSCOM Systems Engineering Policy, requires a Systems Engineering Technical Review (SETR) be conducted to assess the detailed design aspects which support Production Readiness (PR). This review is normally only done on the lead ship of a class. It is referred to as a “SETR PR”, and is led by the SDM with contributions and inputs from the Waterfront CHENG when requested.

In addition to the SETR PR, most shipbuilding contracts have requirements for the shipbuilder to conduct a Production Readiness Review (PRR). The PRR covers a broad range of items which affect Production Readiness, of which design maturity is just one aspect. When conditions permit, the SETR PR should be conducted a short time **after** the shipyard’s PRR so that the information the shipbuilder presents at the PRR can be fully appraised and factored into the assessment.

8.4.2.5 Equipment Qualification Program Support

SUPSHIP Engineering participates in a variety of activities to ensure significant non-standard purchase specification equipment conforms to requirements and to increase insight into any technical issues prior to receipt at the shipyard. These activities include reviewing purchase specifications and procurement consent packages, attending design and production reviews, and reviewing test procedures, vendor drawings and technical manuals. Efforts are focused on high risk equipment that has not yet completed first article testing. These are typically developmental items incorporating new technologies or involving complex integration with other systems. If not monitored closely, these items have the potential to adversely affect overall ship cost and schedule. To the extent practicable, SUPSHIPs will witness first article and qualification testing of these items to verify requirements are met and that any non-conformance is properly documented and resolved. These efforts also increase SUPSHIP familiarity and expertise in order to be more effective in working through installation, test and activation issues.

** Denotes secure hyperlink requiring NMCI/CAC access

SUPSHIP Engineering provides input to SUPSHIP QA for coordinating Government Source Inspections (GSI) with the Defense Contract Management Agency (DCMA) activity having plant cognizance for the equipment vendor. This provides reasonable assurance that technical and quality related matters will be identified and corrective actions will be taken by the shipbuilder prior to shipment. Delegation of GSI to DCMA is also based on quality and cost risk and is usually invoked on only a portion of the contractor's purchase specification equipments.

8.4.2.5.1 Participation in Factory Acceptance and First Article Testing

SUPSHIP Engineering may participate in factory acceptance testing and first article testing of high risk or developmental equipment and systems. High risk items are those that may significantly increase the overall ship cost, are within the critical path of the ship's schedule, have historically experienced difficulty meeting technical requirements, or involve complex integration with other sub systems onboard the ship. Developmental items are newer technology equipment and systems that have not been applied to Navy ships or are being applied in a unique or expanded way. Participation primarily includes review of test procedures and witnessing of tests to confirm technical performance of the items and verification of the interfaces at the original equipment manufacturer (OEM) facility.

8.4.2.6 Weight and Moment Control

Shipbuilding, conversion and maintenance contracts contain requirements for the shipbuilder to establish a mass properties (weight) control and reporting program.

SUPSHIP will maintain oversight throughout detail design, construction and repair to ensure that the contractor has complied with the requirements for weight and moment control. Oversight is provided to verify that the contractor is actively engaged in carrying out a weight control program to meet the contractually specified values for displacement and vertical center of gravity, as well as specified list and trim conditions stated in the ship's specifications. The weight control and reporting program requirements are defined in the Shipbuilding Specifications for new construction or the Availability Work Package (AWP) for repair or overhaul. One person within the SUPSHIP Engineering Department will be assigned as the Weight Control Program Coordinator to monitor the shipbuilder's efforts. The coordinator will have this duty as a primary function and will be assigned all necessary support to perform the weight control function.

A local instruction will delineate specific responsibilities throughout the command, including those assigned to the Engineering Department to ensure contract requirements are met.

8.4.2.7 Facility Certification Support for Dry Docks, Launch Ways, Weapons Handling, Etc.

The purpose of this section is to describe the involvement of SUPSHIP Engineering in support of safety certification of industrial facilities; a function critical to the protection of the ship and the safety of personnel.

8.4.2.7.1 Dry Docks and Launch Ways

The governing documents for the Facility Certification program are reference (g), NAVSEAINST 11420.1C**, Drydocking and Launching Facilities Safety Certification for U.S. Navy Ships, and reference (h), MIL-STD-1625D), DoD Standard Practice Safety Certification Program for Drydocking Facilities and Shipbuilding Ways for U.S. Navy Ships.

SUPSHIP roles and responsibilities in support of NAVSEA 04XQ, the technical warrant holder for dry docks and launch ways, may include:

- Providing management oversight and technical expertise to the shipbuilder's initial Facility Certification Report (FCR) process as required by the shipbuilding contract prior to transferring and launching a vessel. This involves:
    - Developing a course of action to ensure that new drydock and launching facility certifications or recertifications are following references (g) and (h)
    - Reviewing all certification-related documentation for completeness
    - Submitting documentation to NAVSEA 04XQ, the technical warrant holder
    - Verifying contractor's compliance with certification terms and conditions
- Providing management oversight and technical expertise to the shipbuilder's maintenance, inspections and re-certifications of its facility and dry-docks to remain Navy certified as follows:
    - Assisting the designated Navy inspection team in scheduling the NAVSEA 04XQ triennial facility certification audit with the commercial activity and participating in the audit
    - Ensuring that reports affecting facility certification are sent to NAVSEA 04XQ, including those that involve:
        - Facility modifications, which change the basic design or capacity
        - Changes to key personnel
        - Changes to operating procedures or manning
        - Drydocking a non-Navy vessel that exceeds the facility's certified line load
        - Accidents, incidents or near misses. These include damage to the facility to such an extent that its ability to operate safely is diminished. This report will be required whether or not a ship is in the facility at

** Denotes secure hyperlink requiring NMCI/CAC access

- the time damage occurs and whether or not the cause of the damage was natural or man-made.

- Providing oversight for commercial activity facility control inspections as follows:
    - Providing qualified individuals such as docking observers, surveyors or engineers to accompany commercial activities during control inspections.
    - Reviewing the activity's control inspection results for accuracy and completeness and concur with the results based on their observations during the inspections. If the inspection results are determined to be inaccurate or incomplete, ensuring the activity determines the reason for the discrepancy and implements corrective action as applicable.
    - Verifying the qualifications of the activity's control inspection personnel, including divers that conduct underwater inspections, and that inspection personnel qualification records are maintained by the activity.
    - Reviewing the inspection instructions for divers and being present during the briefing of the divers to ensure that they understand their inspection responsibilities.
    - Being present (topside) during diver inspections to monitor the extent of the underwater inspections and note the results reported by the divers.
    - Maintaining records of the control inspection reviews and inspector qualifications for the triennial NAVSEA maintenance audit.

8.4.2.7.2 Ammunition and Weapons Handling

Reference (i), OPNAVINST 8020.14A, Department of the Navy Explosives Safety Management Policy Manual, establishes the Navy's safety policies, procedures and requirements for handling ammunition and explosives. Explosive handling operations will be performed only at authorized explosives handling berthing locations, such as ordinance facilities and explosive anchorages. Waivers and exemptions of explosive safety standards and criteria are authorized by the Secretary of Defense, delegated to the Chief of Naval Operations (CNO), in order to maintain strategic readiness of U.S. Naval Forces. Waterfront facilities authorized by the CNO have approval for handling limited quantities of ammunition and designated types and quantities of explosives only in designated berthing locations. Ammunition handling will be conducted in accordance with reference (i), NAVSEA OP4, Ammunition and Explosives Safety Afloat, and reference (k), NAVSEA OP5, Ammunition and Explosives Ashore Safety Regulations for Handling, Storage, Production, Renovation & Shipping. SUPSHIPs involved with ammunition and weapons handling have established detailed procedures on roles and responsibilities within the Navy and with the shipbuilder for carrying out these evolutions.

8.4.3 Construction

The construction phase is the longest phase in a ship acquisition project, and from a SUPSHIP's perspective, it is arguably the most demanding. This is particularly true for the Engineering Department. Not only does this phase demand the greatest variety of SUPSHIP engineering responsibilities, it also imposes these responsibilities across the broadest scope of work being performed by the shipbuilder, subcontractors, vendors, and other government activities. The following sections describe the Engineering Department's construction phase responsibilities in greater detail.

8.4.3.1 Technical Problem Resolution

8.4.3.1.1 Disposition of Non-Conformances

New construction departures are normally in the form of a waiver/deviation request and are generally applicable to only one ship. They constitute the as-built configuration of a ship and are liabilities against specification or contract document requirements. These liabilities must be linked to the specification or contract document being departed from in order to maintain configuration management. The SUPSHIP Engineering Department reviews and dispositions non-conformances for technical adequacy in accordance with programmatic and technical authority requirements.

Non-conformances are identified when a system, component, process, or procedure does not conform to a design, technical, or quality assurance contractual requirement. Non-nuclear deviation requests requiring government approval are forwarded to SUPSHIP for engineering review and approval by the CHENG or other technical warrant holders as appropriate. Minor deviation requests are approved by the waterfront CHENG. Major deviations exceed the authority of the local CHENG and require higher level approval per technical authority and programmatic requirements. SUPSHIP may review and provide technical recommendations to the higher authority.

Process

A non-nuclear waiver/deviation request is documented by the shipbuilder and submitted per the applicable contract requirement, normally a CDRL. The SUPSHIP Engineering Department then reviews for proper classification and technical acceptability. Non-conformances are classified as major or minor based on the associated risk and criteria listed in the applicable contract and NAVSEAINST 5400.95F**. The CHENG utilizes all necessary subject matter experts within the SUPSHIP Engineering Department, as well as other technical warrant holders and In-Service Engineering Agents (ISEA), to ensure adequate technical justification exists to accept the condition. When the non-conformance could lead to a ship design engineering change, the SDM is contacted and involved in the approval process.

When the engineering review is complete and the technical justification is found to be acceptable, the CHENG or delegated local approval authority may approve a minor non-

** Denotes secure hyperlink requiring NMCI/CAC access

conformance. Major non-conformances are forwarded to NAVSEA in accordance with the applicable contract and NAVSEAINST 5400.95F**.

Depending on the program, new construction or repair, and the shipyard, various systems are used to initiate, route, track and document non-conformance adjudication. The Electronic Departure from Specification System (E-DFS) is used for post-delivery departures in accordance with the reference (l), COMFLTFORCOMINST 4790.3, Joint Fleet Maintenance Manual (JFMM), Volume V, Quality Maintenance. Post-delivery non-conformances are classified as "temporary" or "permanent" and are assessed for major/minor classification IAW NAVSEAINST 5400.95F**. Non-conformances are approved as permanent when the condition will last the expected life of the ship or as temporary when a repair is planned for a later time.

For non-nuclear ships, the CHENG is responsible for identifying non-conformances that in their judgment are necessary to be made known to future repair activities. These will include documentation of any significant condition that can be measured or observed to be not in accordance with NAVSEA requirements, but that has been evaluated and permanently accepted by the appropriate Technical Authority. Examples include, but are not limited to:

1. Oversized or undersized shafts, bearings or other major components.
2. Observable material substitutions that are not specifically called out on the installation drawing.
3. Material substitutions or repairs (whether observable or not) that will have an adverse effect on durability or maintainability.
4. Conditions that will affect the logistics chain including spare parts, repair procedures, Periodic Maintenance Cards (PMCs), EOSS procedures, etc.
5. Stud standouts, shock clearance envelope violations, abnormal valve settings, or any other condition that would be recognizable as a non-conformance to a trained observer.

Examples of things that should not be included:

1. Process variations (missed inspections, out of sequence test or work steps, exceeded cure times for paint systems, etc.)
2. Items that in the opinion of the CHENG meet the intent of the specification, but are not in verbatim compliance (font size on lettering, cosmetic variations in appearance, human engineering and accessibility requirements for access to equipment, etc.)

CHENG is responsible to apply the above criteria, identify the approved waivers/deviations that require a permanent DFS and either enter them or provide copies of these to NAVSEA 05S for incorporation into eDFS as permanent records for historical purposes.

** Denotes secure hyperlink requiring NMCI/CAC access

8.4.3.1.1.1 Testing Non-Conformances

The ship test program is another source of waterfront technical problems requiring government involvement for resolution. Test problems can come in the form of inaccurate or out-of-specification data or test process or procedure challenges. Test problems are documented and adjudicated in various ways depending on the construction program, the shipyard involved, or whether it pertains to new construction or repair work. The level of approval for a test non-conformance is dependent on specific program requirements for new construction and/or Navy test program requirements as discussed in section 8.4.4. SUPSHIP Engineering will witness testing as necessary to resolve test problems.

8.4.3.1.1.2 Assessment of Aggregate Affect

A temporary non-conformance considered technically acceptable when reviewed individually could create an adverse effect on the ship when “stacked-up” or considered with other concurrently existing temporary non-conformances. Permanently approved non-conformances are considered technically acceptable for the life of the ship and would not fall under the scope of the aggregate review.

The aggregate review is performed to ensure that the combined effects of temporary non-conformances or work deferrals do not create an adverse condition for the ship in support of ship certification events. Aggregate reviews will typically be performed prior to significant ship key events, such as prior to sea trials, delivery, or redelivery. Various methods of aggregate reviews can be performed, but SUPSHIP Engineering offices should have instructions outlining their process.

8.4.3.1.2 Oversight of Shipbuilder Technical Problem Resolution

Naval ships are incredibly complex machines and their construction and testing is inherently subject to unforeseen problems that must be resolved in a timely manner to support operational requirements and construction schedules. For work performed by private shipyards, it is the responsibility of the contractor to resolve these problems. When the problems cannot be resolved within approved processes or technical specification requirements, the SUPSHIP becomes involved. The role of SUPSHIP Engineering is to assess the adequacy of technical alternatives proposed by the contractor and to work with the contractor to support timely resolution. The SUPSHIP works within the confines of both technical and programmatic authority imposed, respectively, by the Waterfront Technical

** Denotes secure hyperlink requiring NMCI/CAC access

Authority of the CHENG and the programmatic authority delineated by the particular acquisition program. Problem resolution varies depending on the program and the type of problem, often involving numerous processes.

8.4.3.1.3 Coordination of Government Responsible Technical Issue Resolution

The Waterfront CHENG is responsible and accountable for all engineering, technical work and technical decision-making that occurs on the waterfront. This includes the resolution of technical issues that are the sole responsibility of the government. For government responsible waterfront issues related to design and integration, the Waterfront CHENG coordinates resolution with the SDM. For minor non-conformances, the Waterfront CHENG is responsible for the disposition of government issues. For major non-conformance, the waterfront CHENG forwards the non-conformance to the Program Manager and provides a copy to the SDM and appropriate TWHs. The Waterfront CHENG is responsible for coordinating data collection and assessing the results with the appropriate government agencies, including NSWCs, NAVSEA, PEOs, and government test teams. The CHENG provides all formal documentation with each major non-conformance submittal.

8.4.3.1.4 Resolution of Technical Issues Involving Other Regulatory Bodies

An adjudication process is necessary to resolve technical conflicts between SUPSHIP and other regulatory authorities (e.g., ABS, Department of Energy, SEA 08). When conflicts arise, SUPSHIP and the affected regulatory body must either come to a mutual agreement to technical resolution or raise the issue to the appropriate higher level authority for further adjudication.

When technical adjudication is necessary, SUPSHIP is responsible for:

a. Defining the technical issue and identifying all contractual requirements, such as Ship Contract, Ship Build Specifications, ABS NVR and HSNC, Military or Commercial Standards, etc.

b. Identifying the stakeholders that will be required to properly adjudicate the technical issue (e.g., regulatory body, SEA 05 SDM and TWHs, Program Office).

c. Making arrangements for the technical discussion among SUPSHIP and the appropriate stakeholders.

d. Documenting summary of the adjudication discussion, including technical agreements made and any required actions.

e. Arranging for any follow-on technical discussions and tracking to closure all actions required for the resolution of the technical issue.

f. Ensuring appropriate documentation, such as waivers, deviations, Engineering Change Proposals (ECPs), build specification changes, or other contractual agreements

(e.g., Justification for Technical Determination (JTDs) used on the LCS programs have been processed to contractually document the technical resolution).

g. Raising the technical issue to the appropriate higher level authority (e.g., NAVSEA 05) if adjudication at the SUPSHIP level cannot be achieved.

8.4.3.1.5 General Problem Resolution and Technical Support

Many times the contractor or other SUPSHIP departments require Engineering Department assistance in general problem resolution. These engineering assists are tasks which should be documented and tracked to resolution. The Technical Support Management (TSM) database (or equivalent) database is utilized to initiate and track engineering action on requests for engineering assistance from other SUPSHIP departments.

Significant and unusual events may be investigated via a critique process. The purpose of a critique is to determine whether an unusual occurrence is systemic in nature, to identify problems which contributed to the occurrence, to attain the root cause of the incident, and to identify immediate, short-term and long-term actions to recover and preclude reoccurrence. Reference (m), Uniform Industrial Process Instruction (UIPI) 0900-453, Critique and Problem Analysis Matrix Processes, provides a procedure for conducting critiques. Local procedures are often written to adapt the UIPI to a particular organization.

8.4.3.2 Oversight of Shipbuilder Production and Engineering Procedures

Construction of Navy ships requires an enormous quantity and scope of shipbuilder processes and procedures. As dictated by individual shipbuilding contracts, selected contractor's procedures are formally submitted to the Navy for review, comment and approval, while others are written and maintained by the shipbuilder with no formal government involvement.

NAVSEAINST 5400.95F** describes the roles and responsibilities of the Waterfront CHENG. Among these is the responsibility for setting local technical standards, providing technical expertise and ensuring safe and reliable operations. In order to carry out this responsibility, each SUPSHIP has developed a unique set of internal documents (operating procedures, work instructions, etc.) to formalize the oversight process. This process may include both formal and informal document reviews and audits, and may require reporting the findings to the shipbuilder.

8.4.3.3 Technical Support for Certification Programs and Systems (SUBSAFE, Fly-by-Wire, DSS/SOC, etc.)

The purpose of this section is to describe the involvement of SUPSHIP Engineering in support of Certification Programs which are critical to ship safety and performance. The three programs discussed in this section are unique to submarines: Submarine Safety (SUBSAFE), Deep Submergence System Scope of Certification (DSS-SOC) and Fly-By-Wire Ship Control System (FBWSCS). The Critical Safety Item (CSI) program is applicable to all platforms and is addressed in section 8.4.3.3.1.

** Denotes secure hyperlink requiring NMCI/CAC access

The governing documents for each certification program are as follows:

- SUBSAFE - Submarine Safety (SUBSAFE) Requirements Manual, NAVSEA 0924-062-0010 (reference (n))
- DSS-SOC - System Certification Procedures and Criteria Manual for Deep Submergence Systems, NAVSEA SS800-AG-MAN-010/P-9290 (reference (o))
- FBWSCS - Submarine Fly-By-Wire Ship Control Systems Requirements Manual, NAVSEA T9044-AD-MAN-010 (reference (p))
- CSI - Naval Ships' Critical Safety Item Program, Non-nuclear, NAVSEAINST 9078.1 (reference (q))

These requirements documents generally define the certification requirements and the scope and intent of the certification requirements on a program level. In addition to the requirements manuals, each program employs various implementation documents which define discreet boundaries and responsibilities for all organizations involved.

The SUBSAFE Certification Program is designed to provide a high level of confidence in the material condition of the SUBSAFE boundary and in the ability of the submarine to prevent flooding and recover from flooding and control surface casualties. The Submarine Safety (SUBSAFE) Requirements Manual prescribes technical and administrative requirements along with procedures that must be followed in order to SUBSAFE certify a submarine. It requires all work within the SUBSAFE Certification Boundary be performed, documented and controlled as required by the manual. The SUBSAFE certification program encompasses all aspects of submarine procurement from design through life cycle maintenance, major delineations being design, initial certification and certification maintenance. SUPSHIP has specific responsibilities in each of these phases with some of them carried out by the SUPSHIP Engineering Department. Engineering Department responsibilities in the design phase include specification and drawing review for incorporation of all program technical and certification requirements and SUBSAFE Design Review (SSDR) obligations as delineated in the SUBSAFE Design Review Procedures Manual, NAVSEA 0941-041-3010. During initial certification, which includes the construction and test and trials stages, SUPSHIP Engineering participates in the resolution of technical and certification issues, resolves or contributes to the resolution of SUBSAFE departures, reviews drawing changes for incorporation of SUBSAFE requirements as necessary, participates in SUPSHIP and NAVSEA ship certification audits, witnesses SUBSAFE testing on a case basis, reviews and forwards (to NAVSEA) shipyard/ship specific design review reports, and reviews contractor responses to audit findings. In order to recommend to the Supervisor that a ship is ready to be certified for fast cruise or unrestricted operations, the Engineering Department follows a discreet process to insure that all required technical work is complete and tested or correctly deferred. Technical work includes, but is not limited to, departures, deferrals, drawing changes, test forms, test data, re-entry control testing, logistic technical data, URO/MRC inspections, Corrective Action Reports (CARs), and Selected Record Data (SRD).

** Denotes secure hyperlink requiring NMCI/CAC access

Engineering Department personnel also perform an aggregate review of all deferrals and/or temporary departures.

Some SUPSHIP Engineering Departments staff a SUBSAFE position to manage SUBSAFE issues, perform audits, lead SUBSAFE certification evolutions and key events, provide SUBSAFE training, and write and maintain department instructions. Another construct includes the command SUBSAFE Program Director (SSPD) as a direct report to the Engineering Department Head, the CHENG.

The DSS-SOC Program is a quality program that ensures personnel safety of Special Operations Forces (SOF), Navy SEALs, operators, and occupants of a Deep Submergence System. The “Deep Submergence System” is defined as those systems and components which, when working together, provide the capability for manned underwater operations. The “Scope of Certification” of a Deep Submergence System is comprised of those systems, subsystems and components and the associated maintenance and operational procedures required to provide maximum reasonable assurance that DSS personnel are not imperiled during system operations. The program provides maximum reasonable assurance that an accident will not occur and that DSS personnel may be recovered, without injury, in the event of an accident.

Like the SUBSAFE program, the DSS-SOC certification program encompasses all aspects of submarine procurement from design through life cycle maintenance. The responsibilities of the SUPSHIP Engineering Department are equivalent but not identical to those described above for the SUBSAFE program.

The FBWSCS program is unique to Virginia and Seawolf Class submarines. The Submarine Fly-By-Wire (FBW) Ship Control Systems Program was established to augment traditional certification processes by specifically addressing the software driven functionality and electronic components that host and process that software. The program provides administrative and technical requirements for the design, development, test, initial certification, and maintenance of submarine fly-by-wire ship control systems. The program is designed to ensure that the submarine fly-by-wire ship control system, including hardware and software, operates safely for the initial system design and all subsequent changes. Adherence to requirements provides maximum reasonable assurance that the Ship Control System (SCS) will not cause a casualty or prevent ship recovery from a flooding or control surface jam casualty. Again, the responsibilities of the SUPSHIP Engineering Department are similar to the certification systems described above. The Engineering Department includes a specific FBWSCS technical point of contact with expert knowledge of the systems and certification requirements.

8.4.3.3.1 Critical Safety Item (CSI) Source Approval

The CSI program was established to comply with Section 130 of the John Warner National Defense Authorization Act of 2007 and includes responsibilities for SUPSHIP, and specifically, the Waterfront CHENG. A Critical Safety Item (CSI) is any ship part, assembly or support equipment containing a critical characteristic whose failure, malfunction or absence may cause a catastrophic or critical failure resulting in loss or serious damage to

the ship, or unacceptable risk of personal injury or loss of life. NAVSEAINST 9078.1, Naval Ships' Critical Safety Item Program, Non-Nuclear, provides command level policy, responsibilities, coordination, and awareness in procurement of Critical Safety Items (CSIs) as well as modification, repair and refurbishment (overhaul) of ships' non-nuclear CSIs. Reference (r), NAVSEAINST 9078.2, Naval Ships' Critical Safety Item (CSI) Program Technical Requirements, establishes the technical requirements, procedures and processes for implementing the Naval Ships' CSI Program, as required by NAVSEAINST 9078.1. This instruction specifies requirements, procedures and responsibilities for the determination of items as CSIs, CSI identification, CSI specification/standard and drawing review, source approval, sourcing and provisioning, and oversight of CSIs.

When CSI is contractually invoked, SUPSHIP responsibilities include:

1. Ensuring CSIs or services for repair, maintenance, modernization, and overhaul of CSIs are provided by approved sources by accessing the PDREP CSI database. When CSIs or services are exclusively manufactured, performed or produced by a prime contractor, SUPSHIP will ensure the prime contractor is an approved source. The prime contractor may be approved by the warranted SUPSHIP Waterfront Chief Engineer.

2. Ensuring prime contractors or shipbuilders (new construction) have a Supplier Approval Process adequate to support the NAVSEA CSI Program, or the shipbuilder must obtain CSIs or services for CSIs from a Navy approved source. This does not override the responsibility of prime contractors and shipbuilders to conduct oversight of their sub-tier sources.

3. Approving/disapproving potential offerors as CSI sources in accordance with enclosure (5) of reference (r), NAVSEAINST 9078.2, under the Chief Engineer's authority as a TWH.

4. Ensuring technical documentation and material ordering documents indicate items that are CSIs.

5. Conducting Procurement Quality Assurance (PQA) oversight of contracts to ensure local purchase CSIs or services for repair, maintenance, modernization, and overhaul of CSIs are with approved sources.

6. Initiating Letters of Delegation (LODs) as recommended in the PDREP CSI database by the TWH or as determined locally.

8.4.3.4 Technical Support for Key Events

The purpose of this section is to describe the involvement of SUPSHIP Engineering in support of Key Events. A Key Event is a milestone during ship construction or repair when the ship is certified ready for a particular evolution. Key events can be a major milestone such as undocking, crew certification or sea trials, but can also mark less visible events such as the start of fan room load out or the start of main storage battery installation.

Key events are logically sequenced and require the ship's configuration to be at a specific level of completion in order to accomplish that particular key event. All work that supports a key event is tracked until completion or deferral. Within the SUPSHIP Engineering Department are Project Engineers dedicated to the technical support of specific ships. They also assist in monitoring selected work items to ensure the shipbuilder is making adequate progress to support key events. Meetings, discussions with Ship's Force and the ship's manager, and routine reports are some of the methods used for ensuring that required work is visible and scheduled for completion. Project engineers may utilize the shipbuilder's database to track outstanding shipbuilder responsible work, and an internal database, such as the Technical Support Management (TSM) system, to track outstanding government responsible work. The outstanding work required for a particular key event remains on the database until completion or deferral.

Shipwork and testing evolutions are split into groups and related to each other according to their impact on key events. If all work required to be accomplished prior to a key event cannot be completed to support the key event, there is a system to analyze the outstanding work and its impact on the key event. Some deferred work requires evaluation by the Engineering Department to make a determination if it is safe to proceed to the key event without completion of the work.

8.4.3.5 Provide Project Engineering Support

The Stewardship competency delineated in NAVSEAINST 5400.95F** requires the Waterfront CHENG to "Provide engineering support to project teams while maintaining a matrix core engineering staff." As described in section 8.2, SUPSHIP Engineering is a matrix organization which supports multiple project offices. In order to best serve each project office, the engineering organization employs dedicated Project Engineers (PE). PEs do not have a direct reporting chain of command to the project office; however, the PE functions as a dedicated technical resource and advocate for the assigned project office. PEs are designated for both new construction and repair projects; the functions of each differ slightly to align with governing processes. PEs may be delegated limited technical authority, but must work in conjunction with branch heads, division heads and/or the CHENG in resolution of all technical issues (i.e., not to work independent of the technical resources of the Engineering Department). PEs can be permanently appointed or assigned on a rotating basis.

Primary PE duties and responsibilities include:

- Acting as the primary technical point of contact for all waterfront matters associated with assigned programs
- Coordinating the review, evaluation and approval efforts for technical documents supporting their project
- Assessing the shipbuilding contractor's assignment of open work items to applicable key events

** Denotes secure hyperlink requiring NMCI/CAC access

- Advising the CHENG in the allocation of Engineering Department resources in support of shipyard work schedules and key events and resolution of emergent technical issues (including planning for off-shift, weekend support)

- Participating in contractor team review efforts in order to determine if technical problem resolution concepts reflect the best possible options within project limitations

- Attending project/program status meetings such as Plan-of-the-Day and projects briefs and briefing the CHENG on shipyard work status

- Attending contractor critiques to assess impact/risk to associated project work in yard

- Assessing the risk of technical items affecting their assigned program and resolving accordingly

- Reviewing the Availability Work Package (AWP), where applicable, prior to commencement of an availability to identify and understand work scope, potential technical difficulties and Engineering Department impact

8.4.3.6 Technical Support for Docking and Ship Movement Events

Reference (s), Navy Regulations, Articles 0871 “Responsibility for Safety of Ships and Crafts at a Naval Station or Shipyard,” and 0872 “Ships and Crafts in Drydock” contain the Navy policy for ships and craft drydocking and undocking. Specifically, the regulations state that the docking officer will take charge of the evolution at the point the vessel enters the drydock (vessel reaches the dock sill and the ship is pointed fair for entering the drydock) and will complete the docking, remaining in charge until the ship has been properly landed, bilge blocks hauled and the dock pumped down. For undocking, the docking officer will assume charge when flooding the dock preparatory to undocking is started, and will remain in charge until the extremity of the ship last to leave the dock clears the sill and the ship is pointed fair for leaving the drydock. Although the shipbuilding contractor is responsible for the docking and undocking evolutions of naval ships during construction or repair, the regulations also assign responsibility to SUPSHIP to ensure that the contractor’s facilities, methods, operations, and qualifications meet the standards of efficiency and safety prescribed by Navy directives. In order to do this, the Supervisor must have military and/or civilian personnel specifically trained and qualified as a Docking Observer to check and verify the contractor’s facility and mode of operation during docking, undocking and launching of naval vessels. The SUPSHIP Engineering Department supports dry dock operations by providing technical expertise for the inspections of docks and blocking and by supporting the Docking Observer during the preparation for and execution of docking/undocking of Navy assets.

Specifically, the SUPSHIP Engineering Department supports the Docking Observer by providing a Naval Architect to perform the following functions:

a. Provides technical review of contractor-prepared docking drawings and associated data for each dry docking evolution. Where deviations from naval ship docking drawings exist, ensure that such deviations are justified and are technically sound.

b. Provides technical support to the Quality Assurance (QA) Department Process Control Division.

c. Evaluates the contractor's information on block clearances and performs a review of the contractor's computations dealing with tank liquid load status, list, trim, and the expected ship's stability condition at lift-off.

d. Verifies that the contractor's stability calculations are correct by formal memorandum to the Docking Observer for the docking/undocking of surface ships.

e. Ensures that the provisions of reference (t), Naval Ships Technical Manual Chapter 997, S9086-7G-TM-010/CH-997, "Docking Instructions and Routine Work in Drydock" are carried out with respect to docking drawing changes necessary as a result of work accomplished during the dry dock period.

f. Performs technical review of the Docking Report (NAVSEA forms 9997/1 through 9997/5, as applicable) for each undocking.

g. Provides on-site assistance during docking and undocking evolutions.

8.4.3.7 Oversight of Shipbuilder's Module Transportation and Ship Movement Facilities

In the execution of Navy shipbuilding contracts, shipbuilders employ facilities to construct and transport Navy assets. The shipbuilder is responsible to provide the assets required to transfer ship sections, modules, components, fixtures, and loose material between various facilities and locations. These assets may be shipbuilder owned or leased. Due to the magnitude, complexity, size, and weight of the various items to be transferred, the shipbuilder utilizes heavy lift transport equipment for land and sea transport. Because these transports are high-risk evolutions, SUPSHIP Engineering is responsible for:

- Ensuring that all equipment used in the transfer process is certified to the standards of the appropriate classification society, e.g., USCG or American Bureau of Ships (ABS)
- Monitoring the transport operation
- Monitoring maintenance requirements periodically
- Overseeing major modifications to contractor equipment
- Participating in major ship section moves (as defined by local shipyard procedures)
- Conducting technical assessment of emergent situations

Surveillance and inspections are conducted during transfer or transport operations and may include SUPSHIP approval of some process steps. The amount of direct oversight is determined by the risk involved in the evolution. SUPSHIP Engineering may also be present for classification society and shipbuilder inspections and surveys. Inspections of weather protection devices or systems may be conducted prior to shipment. Scheduled and ad hoc audits are performed to ensure adherence shipbuilder and classification/certification society governing documents and preventative maintenance requirements. SUPSHIP Engineering will work with the shipbuilder to ensure shipment schedules are published and executed to support construction schedules. SUPSHIPs will develop local processes and procedures as necessary to accomplish this oversight.

8.4.3.7.1 Special Lift Oversight

SUPSHIP may oversee and inspect any lift performed at contractor facilities. Lifts may be chosen for inspection through random sampling, but complex, heavy or high risk lifts may be singled out for oversight as well. Critical aspects for overseeing a contractor-executed lift are:

- All relevant drawings and documentation may be subject to review and approval by SUPSHIP. Special consideration should be given to loading conditions of cranes, critical stages of the lifts and proper welding procedures.

- Supporting calculations may be required as part of the documentation of any lift. These calculations will be broken down into three broad categories: unit structure calculations, calculations for temporary supports (lifting padeyes, roll bars, contact points, etc.) and rigging calculations (for spreader bars, cable bridles, etc.).

- The SUPSHIP Engineering Department should provide the findings of its review to the Quality Assurance team, making particular note of any elements of the lift that require attention. Findings which result in a concern for lift adequacy or safety will be provided to the contractor for corrective action.

8.4.3.8 Shock Installation Inspection Support

The SUPSHIP Engineering Department has the expertise to contribute to essential phases of shock hardening of Navy ships. Shock hardening is the process by which ship structure, equipment or systems are made resistant to the acceleration loadings by noncontact underwater explosions. Reference (u), NAVSEAINST 9072.1A**, Shock Hardening of Surface Ships, specifies the role of a SUPSHIP which includes:

- Enforce the ship contact shock specifications.

- Serve as NAVSEA's agent for review and/or approval of shock qualifications and reports submitted by the shipbuilders.

** Denotes secure hyperlink requiring NMCI/CAC access

- Conduct specialized shock qualification and installation technical inspections of shock hardened ships during all phases of construction. Verify that equipment is mounted aboard a ship in a manner consistent with its shock qualification.

- Participate in pre-shock trial planning and technical inspections and in the actual conduct of the shock trials.

- Issue shock qualification approval letters for Contractor-Furnished Equipment (CFE).

8.4.3.9 Coordination and Support for Systems Certification

SUPSHIP Engineering will assist with certification of equipment and systems identified within the applicable contract. The specific level of support will vary depending on the specific system certification. In general, support includes performing inspections and providing an independent technical assessment prior to the Certification Agent inspection. System deficiencies are identified to the contractor in advance of the inspection and SUPSHIP Engineering works with the Project Office and the contractor for resolution prior to the Certification Agent inspection. SUPSHIP Engineering coordinates the Certification Agent inspection with the Project Office and contractor to ensure the equipment and systems are ready for inspection and the inspection is scheduled in time to meet the ship's construction schedule. During Certification Agent inspection, SUPSHIP Engineering accompanies the certification inspector and determines whether deficiencies are contractor or government responsible. Post inspection, SUPSHIP Engineering follows up and performs system inspections to confirm correction of deficiencies. SUPSHIP Engineering is responsible for reviewing and resolving contractor disputes to ensure adherence to technical requirements. For government responsible items, SUPSHIP Engineering provides recommendations for correction to the Program Office.

8.4.3.10 Technical Support for Industrial, Environmental and Safety Compliance Issues

In accordance with FAR 42.302, SUPSHIP, as the contract administrator, is required to ensure contractor compliance with contractual environmental and safety requirements, and to monitor contractor environmental practices for adverse impact on contract performance or cost. SUPSHIP Engineering provides environmental technical assistance, as needed, and provides support to QA in monitoring contractor compliance to contractual requirements for the delivery or use of environmentally preferable products, energy-efficient products, products containing recovered materials, and bio-based products.

SUPSHIP Waterfront CHENGs are responsible to ensure safe and reliable operations throughout assigned activities as follows:

- Ensure that safety and reliability requirements are addressed in all technical processes.

- Act as the certification authority when required by a specific certification process.

- Provide approvals for CSI component suppliers (when contractually invoked).
- Provide leadership and technical support to MISHAP investigations and resolutions in accordance with NAVSEAINST 5400.95F** and reference (v), OPNAVINST 5102.1D, Navy & Marine Corps Mishap and Safety Investigation, Reporting, and Record Keeping Manual in support of the SDM and PM team.
- Act as the technical focal point to lead NAVSEA's response for significant incidents (e.g., SUBMISS/SUBSUNK Message, Flooding, Collision, Facilities Incident, etc.).

8.4.3.11 Review of Integrated Logistics Support (ILS) Products

As described in the Integrated Logistics Support chapter of this manual (Ch 14), the role of SUPSHIP has evolved into more oversight than direct participation in logistics. The amount of oversight provided is governed by the new construction contract and the extent of the transfer of material functions to the NAVSUP Fleet Logistics Center.

New construction contracts may require shipbuilders to produce logistics technical data (LTD) in support of platform component and system operational and maintenance requirements. LTD consists of items such as equipment technical manuals, system manuals, operating instructions, maintenance manuals, and for submarines, may also include certification system manuals.

Contractual documents (such as LTD Management Procedures Manual) specify program structure and responsibilities in the development of LTD. SUPSHIP Engineering participates in LTD development in its contractor oversight role in accordance with FAR 42.302 and in a support role to the Ship Design Manager (SDM), in accordance with NAVSEAINST 5400.95F**.

The approval level of the various LTD products is specified either in the contract or in an overarching sub-tier document. For those documents where SUPSHIP is the approval authority, thorough reviews will be conducted. For other LTD, SUPSHIP may review and comment per the Engineering Management Plan as part of its support to the SDM.

8.4.3.12 Coordination of Technical Authority for Alteration Installation Teams (AITs)

The Waterfront CHENG is responsible and accountable for all engineering, technical work and technical decision-making that occurs on the waterfront. This includes the responsibility and accountability for the technical oversight and requirements compliance for all work by any activity, including AITs, accomplished on the waterfront.

When SUPSHIP is acting as the Naval Supervising Activity (NSA) during a Post Shakedown Availability (PSA) or other post-delivery availability, the Waterfront CHENG and LMA may jointly prepare a MOA to clarify the responsibilities of all participating activities involved in the installation of alterations by AITs. Technical Authority responsibilities will be clearly defined in the written MOA, including the authority to approve minor deviations and waivers to the

** Denotes secure hyperlink requiring NMCI/CAC access

design. MOAs will be approved and signed by all applicable activities prior to the AIT commencing the alteration. Reference (w), NAVSEA technical specification TS9090-310F, Alterations to Ships Accomplished by Alteration Installation Teams, provides additional information.

8.4.4 Test

Per NAVSEAINST 5400.95F**, the SUPSHIP CHENG is responsible for the oversight of the technical aspects of testing. This includes ensuring that the processes and procedures encompassed in the test programs meet the invoked requirements and provide the basis for determining the material condition and readiness of the ship for construction key events/milestones, sea trials and fleet operations. Ultimately, the test program provides SUPSHIP and other stakeholders with objective quality evidence of the material condition of the ship and the basis for certifications.

The SUPSHIP Engineering Department works with the SUPSHIP Project Offices and Quality Assurance Department to ensure proper oversight of the test program and that contractor and/or government testing is accomplished in accordance with the contract requirements and specifications. There is no standard approach or organizational structure across the SUPSHIP community to accomplish test program oversight. The Engineering Department may establish dedicated test program personnel, branches or divisions to fulfill its responsibilities for test oversight or may use the specific Engineering Department subject matter experts, in combination with expertise resident in the Project Offices or Quality Assurance Department. The Engineering Department is responsible for the technical aspects and adequacy of the test program regardless of the method chosen to perform the oversight of the test program.

The major elements of test program oversight accomplished by SUPSHIP Engineering Departments are listed below and discussed in more detail in the following sub-sections:

- Technical Authority Oversight
- Review of Test Requirements, Procedures, Data, and Problem Resolutions
- Test Witnessing
- Test Group/Test Team Membership
- Test and Key Event Certifications

8.4.4.1 Technical Authority Oversight of Test Programs

The Engineering Department leads the SUPSHIP efforts in the technical oversight of the shipbuilder's test program. The SUPSHIP CHENG is responsible for the technical adequacy of the test program and testing as the warranted local technical authority. As ships systems and components become increasingly more complex, integrated and interdependent, test programs must be developed and routinely updated to ensure ships' design and construction

** Denotes secure hyperlink requiring NMCI/CAC access

meet specifications. The development of testing requirements, evaluation of component and system performance, resolution of testing problems, and the adjudication of non-conforming conditions are inherently engineering functions under NAVSEA's technical authority. All occurrences of nonconformance must be adjudicated through a Warranted Technical Authority and copies must be provided to the SUPSHIP CHENG/Engineering Department when other activities adjudicate the nonconformance.

8.4.4.2 Review of Test Requirements, Procedures, Data, and Problem Resolution

Engineering will lead SUPSHIP review and approval of contractor and government test procedures and will ensure that appropriate technical documentation is collected. Test documentation includes test procedures, test change proposals, revisions, and reports. Test documentation will be reviewed for technical adequacy and contract compliance. During test execution, Engineering assists with test problem resolution and reviews and approves Test Problem Reports. Test documentation tracking (progressing and statusing), Test Metrics (call outs, etc.) and Configuration Management (Test Index, etc.) are not necessarily core Engineering functions. Engineering responsibilities are summarized below:

- Review and approve initial Test Procedures, Revisions and Change Proposals
- Review and approve Test Problem Reports
- Review and approve Test Reports

Note: The number of test procedures, the type of test problems and the number of test reports reviewed and/or approved is subject to programmatic requirements.

8.4.4.3 Participation in Test Witnessing

Test witnessing responsibilities vary from program to program and can be shared among Engineering, QA, the Project Office, and/or dedicated reimbursably-funded test teams. Engineers may participate in sea trial test oversight acting as Mock INSURV at Builder's Trials or in supporting INSURV at Acceptance or Final Contract trials.

8.4.4.4 Test Team/Test Task Group

The Test Team/Test Task Group conducts observations of the contractor's readiness to execute testing, and assesses objective quality evidence (OQE) from the Contractor's Quality Management Program. The primary purpose of this is to ensure that the ship, its equipment and systems are ready for all phases of shipboard testing, and that prerequisites have been met. The Test Team/Test Task Group provides oversight of Government-conducted shipboard testing of Government-Furnished Equipment (GFE), including review of OQE. SUPSHIP and contractor personnel must closely coordinate their efforts when managing the Shipboard Test Program in accordance with the contract. The Test Team/Test

Task Group is responsible for test program management using test metrics, test progressing and test completion to facilitate test planning and scheduling.

When reference (x), S9092- AC-ADM-010/ITPAM, Industrial Test Program Administration Manual (ITPAM)] or reference (y), S9002-AK-CCM-01 0/6010, Industrial Ship Safety Manual for Submarines] is contractually invoked, a Joint Test Group is established as described below. For programs that do not invoke ITPAM, it is vital that equivalent testing and test group requirements are incorporated by each program to provide visibility to the SUPSHIP Engineering Department, as well as other SUPSHIP departments. The respective Government test teams/test groups will ensure all technical issues are identified to the SUPSHIP Engineering Department for resolution.

The Joint Test Group (JTG) is a term used to describe collectively the persons assigned by their parent organizations to make required local approval actions for a test program. Note that in a private shipyard, the CTE is staffed by the shipbuilder and not controlled by the CHENG. The JTG facilitates local approval of documents for administration, performance and acceptance of testing and communications among the responsible organizations. JTG decisions are to be documented by the shipbuilder, with concurrence by all members of the JTG, and distributed to all JTG members.

JTG membership will consist of one member, designated in writing, from each of the following organizations:

a. Shipbuilder - the CTE for that ship (or area of cognizance for that ship), who serves as chairman unless chairmanship is appointed to another individual by the senior shipyard manager responsible for testing

b. Ship's Force (designated by ship's commanding officer). For new construction ships where systems are not yet transferred, Ship’s Force plays an advisory role in meetings of the JTG

c. SUPSHIP (private shipyard availabilities)

d. Other organizations that have significant work and test may also assign a member as agreed upon by the JTG

The SUPSHIP JTG representative is responsible for:

a. Assigning a member and one or two alternates to the JTG, in writing

b. Providing independent oversight of private shipyard testing and ship safety for NAVSEA

c. Directing that evolutions be stopped if testing or operations are not considered to be progressing in a safe manner and in accordance with applicable procedures

d. Auditing and certifying completed test procedures, when required

8.4.4.5 Test and Key Event Certifications

Certification is the culmination of the process by which Engineering and other SUPSHIP departments determine that a ship is prepared for a key event or ready to begin major testing evolutions. Key events to be certified will vary by program and hull, and may include: Flood Dock, Undock (or Launch), Initial Criticality (or Reactor Plant startup), Engine Light-Off, Dock Trials, Fast Cruise, Sea Trials, and Delivery. A major portion of the Objective Quality Evidence (OQE) that supports this determination is provided by the ship test program and directly involves the JTG/Test Teams. The Engineering Department will provide oversight as described in 8.4.4.2 through 8.4.4.4 to confirm the technical adequacy of OQE used to support certifications.

Major Ship Testing evolutions and Key Events are milestones in the ship construction and/or repair schedule. Each one marks a transition from one phase of construction/repair to the next and eventually culminates in work completion, system/integrated systems level testing and eventually, delivery to the fleet. By associating a Major Testing evolution or Key Event to each work item in the schedule, the prime contractor can schedule and focus the efforts of the trades to complete the work required to support the subsequent shipboard testing (i.e., work to test strategy). Engineering will participate in establishing technical requirements and identifying entrance criteria for Key Events. The JTG/Test Team is responsible for determining the shipboard material conditions and validating the achievement of pre-requisite testing necessary to allow each test/event to commence and complete without delay and risking personal injury or equipment damage. This validation includes the review of completed tests forms, partially completed test forms and outstanding work/deficiencies by the JTG/Test Team. The purpose of this test and Key Event certification process is to provide reasonable assurance, based on the JTG/Test Team assessment, that the material condition of the ship's systems and components is satisfactory to support the upcoming Key Event or testing evolution. This test and Key Event certification feeds into the overall certification process for the ship.

The overall certification process normally requires that each major department conduct a review of each facet of its oversight functions by evaluating outstanding internal and external commitments/actions, quality issues (program and cross program), incomplete work and testing, and non-conformance adjudication. The departments must agree that there are no identified items that could impact the ship's ability to proceed through the Key Event and that the work was performed in accordance with the requirements of the invoked specifications. Each department has independent responsibilities that, when complete and assembled as a whole, provide this assurance. Additionally, the level of assurance necessary for some certifications (maximum reasonable assurance) may require that specific internal and external audits and inspections be performed that are "over and above" the normal and routine quality oversight functions. SUBSAFE, Fly-By-Wire and DSS-SOC are examples of special programs that have specific NAVSEA requirements that must be met to achieve "maximum reasonable assurance" for certification. These additional actions are required to gain assurance of the adequacy and accuracy of the contractor's readiness preparation.

8.4.5 Delivery

8.4.5.1 Delivery Certification (Conventionally-Powered Ships)

Certification of Navy ships in new construction is initiated at contract award. It is the responsibility of SUPSHIP to ensure the design and construction comply with contractual requirements and to actively participate in any changes to the design or technical requirements. This includes interpretation of the requirements as it supports the design products. As milestones and key events are reached in the construction process, SUPSHIP Engineering will ensure the construction follows the design and meets requirements without conflicts. Any deficient areas will be documented using various tracking systems, Corrective Action Reports (CARS) or Trial Cards. As the ship reaches a completed status, testing begins and SUPSHIP Engineering will ensure test requirements are followed and met.

When the ship is substantially complete, the ship will undergo a series of sea trials beginning with Builder's Dock Trials, Builder's Sea Trials and followed by Acceptance Trials with the Navy's Board of Inspection and Survey (INSURV), in accordance with reference (z), INSURVINST 4730.3, Trials of Surface Ships. Prior to conducting sea trials, per NAVSEAINST 5400.95F**, the SUPSHIP CHENG will support the ship's "safe for sea" material readiness assessment. SUPSHIP Engineering participates in Mock-INSURV and INSURV trials by conducting pre-trial inspections, test witnessing (as required), providing technical/risk assessment of system readiness and writing trial cards before and during sea trials. Following trials, SUPSHIP Engineering also participates with required "open and inspects" as well as investigating trial cards screened to engineering for a review.

All open work and tests will be documented on the DD250 at delivery in the form of trial cards, Corrective Action Reports (CARS), open Engineering Change Proposals (ECPs), or other contractual documents. The DD250 will identify and track the status of the ship construction after delivery. SUPSHIP is responsible for maintaining this document as open work items and testing are completed by the shipyard. Final inspections will verify the ship is ready for Ship's Force to take custody and move aboard. At this point the ship will complete Light-Off Assessment (LOA) and Ship's Force will be authorized to operate its systems. All work should be complete at this point or determined that it can be deferred to Post Shakedown Availability (PSA) to be completed after sail away. The ship will then be certified based on this analysis and documentation by SUPSHIP.

8.4.5.2 Delivery Certification (Nuclear-Powered Ships)

Certification of nuclear-powered naval vessels is an iterative process, bringing together multiple facets of the construction process, leading ultimately to delivery certification. The processes and terminologies differ somewhat between submarines and carriers, but the concepts are basically equivalent. Certification generally occurs through the roll-up of milestones and key events in three major areas: material certification, work completion certification and crew certification. Additional information is provided by reference (aa), OPNAVINST N9080.3G, Procedures for Tests and Trials of Naval Nuclear Powered Ships Under Construction, Modernization, Conversion, Refueling and Overhaul.

** Denotes secure hyperlink requiring NMCI/CAC access

Material certification happens at the component level and is governed by various certification programs including Material Identification and Control for Piping Systems (MIC), Critical Safety Items (CSI), Submarine Safety (SUBSAFE) Certification, Deep Submergence Scope of Certification (DSSSOC), and Fly-By-Wire Ship Control System Certification (FBWSCS). These programs carry requirements such as certification of material properties, material marking and segregation, certification of non-destructive testing, etc., that insure the material condition of critical structure and critical systems and components meets specification requirements. The SUPSHIP Engineering role in these material certification systems is discussed in section 8.4.3.3.

Material certification supports certification of critical systems, but work completion certification addresses completion of both critical and non-critical systems. Certification of work completion occurs through work completion tracking, inspection and testing. Work is planned and tracked at the work package level. Work package completion rolls up to system and compartment completion, to module completion (depending on the overall construction process) and finally to full ship completion. Testing is integrated into the construction schedule and includes inspection, system integrity testing, intra and intersystem operational testing, and finally at-sea testing.

On nuclear-powered submarines and carriers, the ship's crew has an integral part in the roll-up to delivery certification. In order to commence crew training and certification, the crew begins to arrive on-site incrementally as much as two years prior to ship delivery. Both SUPSHIP and the crew are part of system/space turn-over from the contractor. This is referred to as the Operational Control (OPCON) transfer process. OPCON transfer is a sequential process with turnover of systems and spaces based on a certified completion which includes system and space inspections by the crew and SUPSHIP. The roll-up of OPCON transfers results in the key event "In Service," at which point the boat can be inhabited by the crew.

Each major area is segmented into milestones and key events and each milestone or key event requires certain work and/or testing to be complete. All work is married to a key event and tracked to completion in support of entering the key event. Incomplete work is reviewed for the technical adequacy of recoding it to a subsequent event.

The role of SUPSHIP Engineering in this process is to track and complete work items in support of milestones and key events. The Project Engineering function discussed in section 8.4.3.5 is key to the success of this effort. SUPSHIP Engineering performs both individual and aggregate assessments of deferred work items to insure adequacy of ship safety and performance. Both contractor and SUPSHIP databases must be reconciled to insure all work is either complete or technically deferred. In addition, the SUPSHIP may keep a checklist, similar to Appendix A of the DDGOS, to track completion of particular critical items. The Engineering Department has responsibility to certify completion of a subset of these items.

All of the aforementioned work results ultimately in certification to allow the ship to commence sea trials. A series of builder's trials are conducted to validate the operation of

systems under tactical conditions at sea. The amount and performance of each trial varies by program; however, all programs conduct a Navy's Board of Inspection of Survey (INSURV) trial. The INSURV trial determines the readiness of the ship to be accepted into the fleet. SUPSHIP Engineering participates in INSURV through preparation of pre-trial cards and participation in the sea trial itself. The recognition and identification of a discrepancy as a potential INSURV item is described in a memorandum submitted to the applicable Project Officer for evaluation and eventual delivery to the INSURV Board. Based on this evaluation the item may be retained, amended or canceled with appropriate feedback to the drafter. The Project Officer maintains a log of all items submitted. The log will constitute the index of deficiency items delivered to the Board just prior to the sea trial. During the trial, riders from SUPSHIP Engineering assist INSURV inspectors as needed to insure that legitimate trial cards are generated. Upon completion of the INSURV trial, all trial cards are categorized as Ship's Force, shipyard, design yard or government responsible. SUPSHIP Engineering reviews shipyard and design yard responses for adequacy and assists in closing government responsible cards when required. Upon completion of all sea trials, SUPSHIP Engineering will have approved or recommended approval on all at sea test forms and/or concurred to deferral of all outstanding work and testing to a later availability. Objective Quality Evidence (OQE) is critical to the ship certification process. OQE comes in various forms and provides the foundation for ship certification. SUPSHIP Engineering supports real time reviews and audits of OQE.

Based on work completion and assessment of OQE from construction, testing and sea trials, the Engineering Department, in addition to all other responsible SUPSHIP departments, makes a recommendation to the Supervisor on the readiness of the material condition of the ship for delivery.

8.4.6 Post-Delivery

[This section to be developed pending issuance of the pertinent NAVSEA instruction.]

8.4.7 In-Service Engineering Support

8.4.7.1 Ship Class Technical Issue Resolution

The primary conduit for NAVSEA In-Service Engineering Support regarding matters of design is through the NAVSEA In-Service Ship Design Manager. The New Construction Ship Design Manager and SUPSHIP CHENG have supporting roles and serve as secondary technical points of contact for crews with whom they have developed contacts during the building phase. Accordingly, it is important that communication on in-service related design issues be shared among the three parties.

The In-service SDM has a number of options available for resolving design issues, one of which is through tasking to the Planning Yard, which in some cases falls under the oversight responsibilities of a SUPSHIP Waterfront CHENG. The Waterfront CHENG has oversight responsibilities for the design products produced by the Planning Yard. Another option would be through special tasking routed via the New Construction SDM to the shipbuilder to

engage their vendors currently under contract to develop options to address observed component performance observed in the Fleet.

8.4.7.2 Planning Yard

In accordance with the reference (bb), SL720-AA-MAN-010, Fleet Modernization Manual, the Planning Yard is the engineering design agent for assigned classes of ships. Planning Yard responsibilities may be assigned to either a Naval Shipyard or a private shipbuilder. For new ship classes, the shipbuilder constructing a class of ships is often assigned as the initial Planning Yard for the class. Responsibilities of the Planning Yard typically include:

- Perform Ship Alteration (SHIPALT) design, engineering and drawing development
- Provide problem resolution for overhauling yards conducting SHIPALT installation
- Develop SHIPALT man-day and material cost estimates
- Maintain a central drawing file of all Master File Drawings
- Maintain configuration control
- Initiate new Ship Change Documents (SCDs) and provide information to the submitter for in-process SCDs
- Develop new and revise Ship Selected Record Data (SSRD)
- Respond to Liaison Action Requests (LARs)
- Develop test criteria or procedures and provide documents to validate successful installation

8.4.7.2.1 Oversee the Technical Adequacy of Shipbuilder's Planning Yard Products

Per NAVSEAINST 5400.95F**, contractor Planning Yards are part of the in-service SDM's engineering support network for nuclear-powered ships, and the SUPSHIP CHENG's engineering support network for non-nuclear surface ships. NAVSEA 04 defines responsibilities and functions and designates the Planning Yard within reference (cc), SL720-AA-MAN-030, Navy Modernization Process Management and Operational Manual (NMP-MOM).

As described previously, contractor Planning Yards may perform Engineering Agent functions when designated as an agent by the responsible SUPSHIP CHENG or In-Service SDM in accordance with NAVSEAINST 5400.111A**.

For Planning Yard contracts, the SUPSHIP CHENG has the same responsibility as described in 8.4.2. For Planning Yard technical products, SUPSHIP will:

** Denotes secure hyperlink requiring NMCI/CAC access

- Review contractor procedures to ensure requirements of the following references are addressed:
    - SL720-AA-MAN-010, Navy Modernization Process Management and Operations Manual (NMP-MOM)
    - Reference (dd), NAVSEA S9AA0-AB-GOS-010, General Specifications for Overhaul of Surface Ships (GSO)
    - Reference (l), COMFLTFORCOMINST 4790.3, Joint Fleet Maintenance Manual (JFMM)
    - Reference (ee), NAVSEA 0902-LP-018-2010, General Overhaul Specifications for Deep Diving SSBN/SSN Submarines
- Review SCDs, SIDs, SSRDs, LARs, and test procedures for compliance with contractor procedures and references (y) through (bb).

Appendix 8-A: Acronyms

ABS	American Bureau of Shipping
ACO	Administrative Contracting Officer
CAO	Contract Administration Office
CAR	Corrective Action Report
CHENG	Chief Engineer
CM	Configuration Management
CNO	Chief of Naval Operations
CSI	Critical Safety Item
DAP	Drawing Approval Procedure
DCMA	Defense Contract Management Agency
DD&C	Detail Design and Construction
DFARS	Defense Federal Acquisition Regulations Supplement
DFS	Departure from Specifications
DWO	Deputy Warranting Officer
ECN	Engineering Change Notice
ECP	Engineering Change Proposal
eDFS	Electronic Departure from Specifications
EMP	Engineering Management Plan
EQA	Engineering Quality Assurance
FAR	Federal Acquisition Regulations
FMA	Fleet Maintenance Activity
FMR	Field Modification Request

GSI	Government Source Inspection
HMR	Headquarters Modification Request
IPT	Integrated Product Team
JFMM	Joint Fleet Maintenance Manual
LAR	Liaison Action Requests
MAIT	Major Area Integration Team
MAT	Major Area Team
OEM	Original Equipment Manufacturer
OPCON	Operational Control
OQE	Objective Quality Evidence
PEO	Program Executive Office
RCOH	Refueling Complex Overhaul
SCN	Specification Change Notice
SCP	Specification Change Proposal
SDM	Ship Design Manager
SIB	Standards Improvement Board
SID	Ship Installation Drawing
SIT	System Integration Team
SSRD	Ship Selected Record Data
SYSCOM	System Commander
TAR	Technical Advisory Report
TWH	Technical Warrant Holder
VECP	Value Engineering Change Proposal