Technology Title: **Fast, Software-Free Synchronous Demultiplexer**

Contact Information: Technology Partnerships Office
NUWC_NPT_TPEO@navy.mil
401-832-8728

Naval Undersea Warfare Center
1176 Howell St., Newport, RI 02841

SYSCOM: NAVSEA
TRL: 3

ABSTRACT

Keywords: hydrophone; circuit; data acquisition

An improved synchronous demultiplexer eliminates the need for software for a data acquisition card. The invention provides a high speed hardware circuit to demultiplex a data stream comprised of frames of digital words, such as from a hydrophone. The circuit reduces costs, processing delays and processing errors through the absence of a data acquisition card. Drawings available. Protected under U.S. Pat. No. 8,339,298.

THUMBNAIL

Software-free system to quickly synchronize with and demultiplex frames of digital words. Available for commercialization under a patent license agreement.

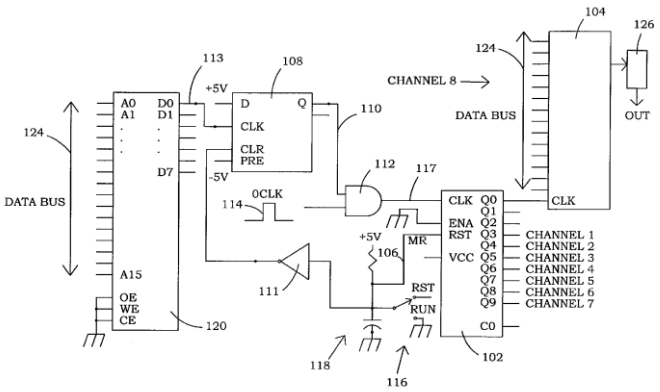

Distribution Statement A: Approved for Public Release; distribution is unlimited