US007573572B1

(12) **United States Patent**
Hamilton

(10) **Patent No.: US 7,573,572 B1**
(45) **Date of Patent: Aug. 11, 2009**

(54) **DRIFT TUBE AMPLIFIER AND METHOD TO AMPLIFY CURRENT**

(75) Inventor: **Brett J Hamilton**, Heltonville, IN (US)

(73) Assignee: **The United States of America as represented by the Secretary of the Navy**, Washington, DC (US)

(*) Notice: Subject to any disclaimer, the term of this patent is extended or adjusted under 35 U.S.C. 154(b) by 746 days.

(21) Appl. No.: **11/229,443**

(22) Filed: **Sep. 7, 2005**

(51) **Int. Cl.**
G01J 3/42 (2006.01)

(52) **U.S. Cl.** ..... **356/319**; 356/327; 356/442; 356/433; 250/423 R; 250/288

(58) **Field of Classification Search** ..... 356/222–226, 356/229, 319, 433, 442, 326, 327; 250/282–286, 250/382–385, 423 R, 423 P, 288; 315/5.35, 315/5.39, 5.51, 5.43
See application file for complete search history.

(56) **References Cited**

U.S. PATENT DOCUMENTS

3,383,545 A * 5/1968 Heil 315/5.39
3,922,091 A * 11/1975 Suva et al. 356/319
4,390,784 A * 6/1983 Browning et al. 250/287
4,472,356 A 9/1984 Kolesar, Jr.
4,500,205 A * 2/1985 Watanabe 356/325
4,726,679 A 2/1988 McCaffrey
4,877,979 A * 10/1989 Sempel 327/555
4,906,440 A 3/1990 Kolesar, Jr.
5,481,218 A 1/1996 Nordholt et al.
5,521,548 A 5/1996 Sugawara
5,522,980 A 6/1996 Hobbs et al.
6,368,560 B1 4/2002 Ostrander et al.
6,883,364 B2 4/2005 Sunshine et al.
6,900,890 B1 5/2005 Rice
7,268,881 B2 * 9/2007 Larsen et al. 356/436

OTHER PUBLICATIONS

M.C. Vogt, L.R. Skubal, Voltammetric Microsensors, Sensor Technology and Design, Feb. 2005.

* cited by examiner

Primary Examiner—Haissa Philogene
(74) *Attorney, Agent, or Firm*—John Gladstone Mills, II; Mark O. Glut; U.S. Navy-NAVAIR Naval Air Sys Command

(57) **ABSTRACT**

A drift tube amplifier having an input and an output. The drift tube amplifier including a current-to-voltage converter for converting input current to a voltage, a band pass filter assembly for reducing unwanted noise within the voltage, a voltage controlled amplifier for adjusting the output voltage level, and a logarithmic ratio converter for converting the voltage from linear to LOG scale.

9 Claims, 3 Drawing Sheets

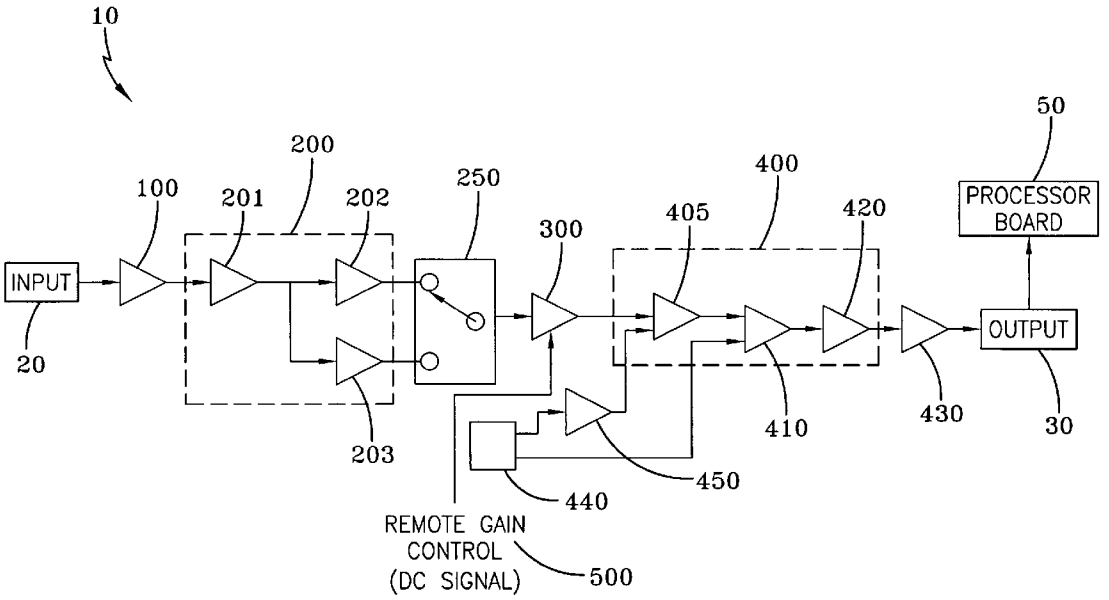

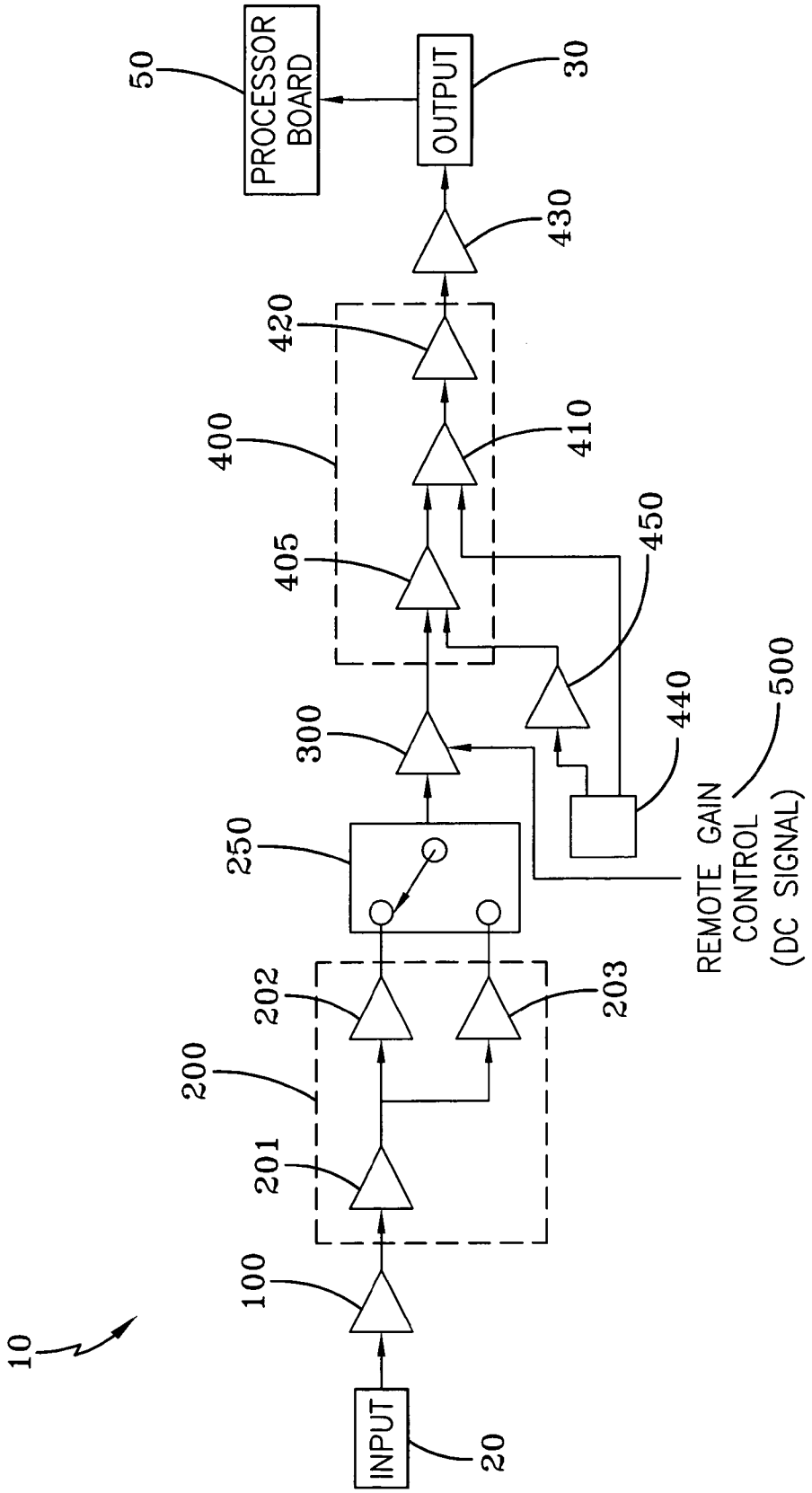
10
INPUT
20
100
201
200
202
203
250
300
405
400
420
410
450
440
500
REMOTE GAIN CONTROL (DC SIGNAL)
430
OUTPUT
30
PROCESSOR BOARD
50

FIG-1

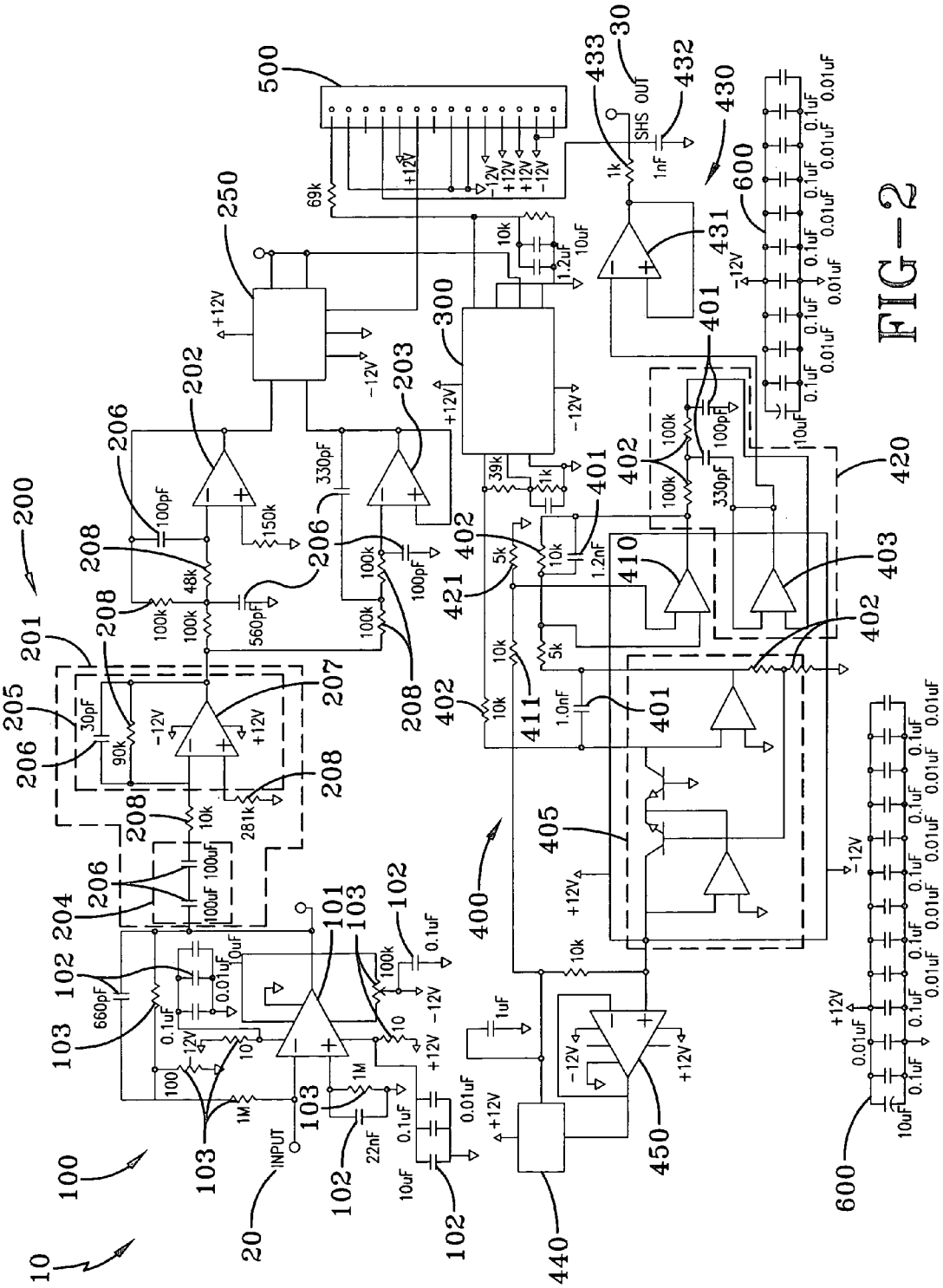
10
100
20
INPUT
101
102
103
200
201
202
203
204
205
206
207
208
250
300
400
401
402
403
405
410
411
420
421
430
431
432
433
30
SHS OUT
440
450
500
600

FIG-2

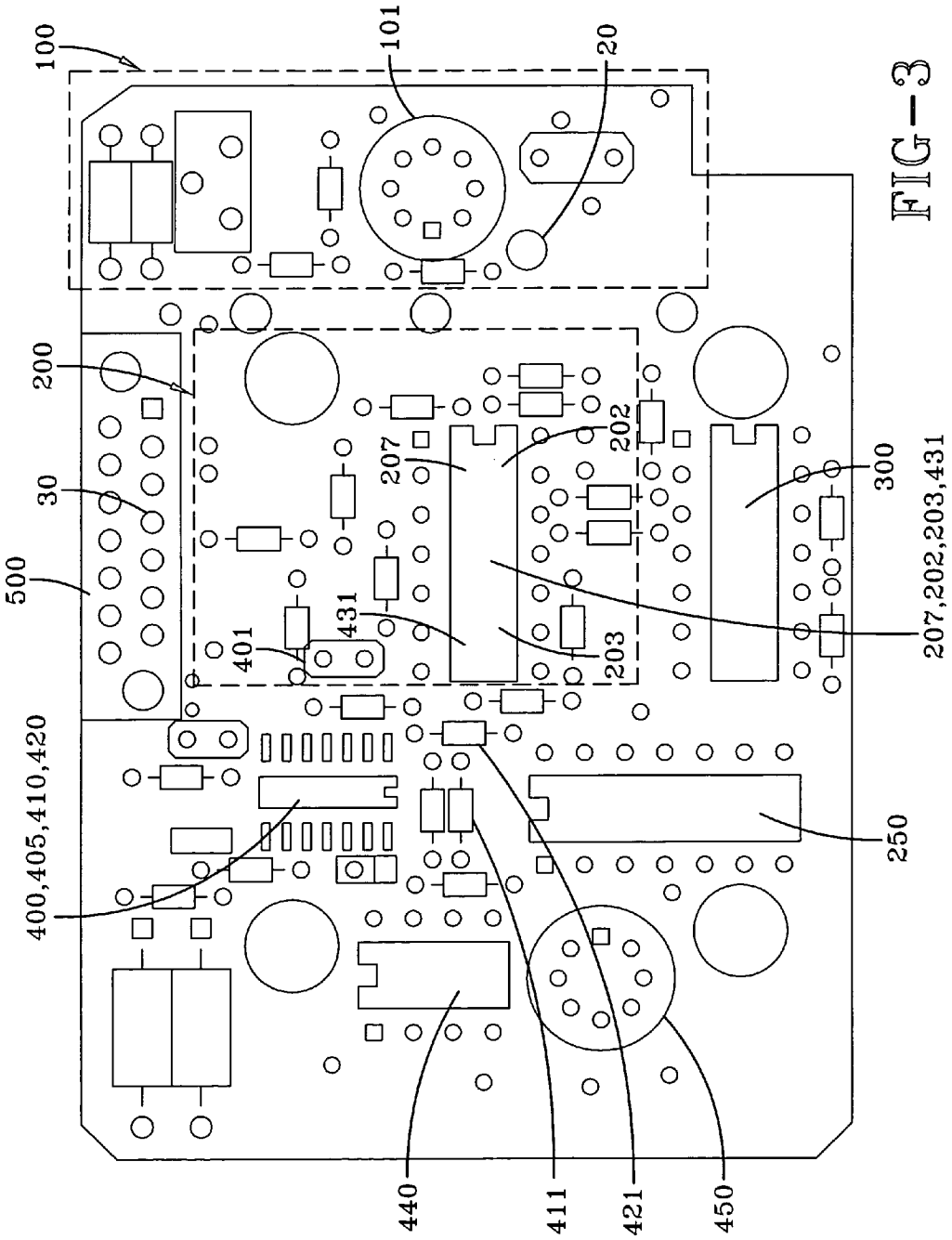
100
101
20
200
30
500
207
202
300
207,202,203,431
431
401
203
400,405,410,420
250
440
411
421
450

FIG—3

DRIFT TUBE AMPLIFIER AND METHOD TO AMPLIFY CURRENT

STATEMENT OF GOVERNMENT INTEREST

The invention described herein may be manufactured and used by or for the Government of the United States of America for governmental purposes without payment of any royalties thereon or therefor.

BACKGROUND

The present invention relates to an amplifier and method to amplify current. More specifically, but without limitation, the present invention relates to a drift tube amplifier and method to amplify current that can be used in conjunction with a chemical agent detection system.

Amplifiers are, but without limitation, mechanisms or devices that make certain outputs greater or larger. Specifically, amplifiers may increase the amplitude of something or allow it to be heard or detected easier. The United States Navy utilizes amplifiers in chemical agent detection systems, specifically systems that detect nerve and blister agents. These amplifiers must amplify extremely low currents that are produced when ions strike a Faraday Cup. A Faraday Cup may be defined, but without limitation, as a device for precisely measuring the current carried by a beam of particles.

The United States Navy utilizes Ion Mobility Spectrometry ("IMS") to identify different species of chemical agents, including nerve and blister agents. IMS is a gas-phase ion separation technique. Ions are formed in a source region, accelerated through a potential gradient with a counter-current drift gas (typically air), and the ions collide with a collector (typically a Faraday Cup). When an ion collides with the collector (the Faraday Cup), it induces an extremely small current. The current must be converted and then analyzed by a processor or processor board. The processor board, based on the current, determines if there is a chemical agent in the air. Since the current is extremely small, it must be amplified and transformed in order for the processor board to properly read and analyze any input received. Thus, there is a need for an amplifier that can transform and amplify the current into a form such that the current may be read and analyzed.

SUMMARY

The present invention is directed to a drift tube amplifier that includes a current-to-voltage converter for converting extremely low input current to a voltage, a band pass filter assembly for reducing unwanted noise within the voltage, a voltage controlled amplifier for adjusting the output voltage level, and a logarithmic ratio converter for converting the voltage from linear to LOG scale, thereby increasing the dynamic range of the output.

It is a feature of the invention to provide a drift tube amplifier that can convert and amplify a low input current to a form that can be read and analyzed, specifically by a processor board of a chemical agent detector.

It is a feature of the invention to provide a drift tube amplifier that minimizes saturation of the amplifier and minimizes long negative tails on the signals.

It is a feature of the invention to provide a drift tube amplifier that allows a user or computer to remotely adjust system gain.

BRIEF DESCRIPTION OF THE DRAWINGS

These and other features, aspects and advantages of the present invention will become better understood with reference to the following description and appended claims, and accompanying drawings wherein:

FIG. **1** is a block diagram of an embodiment of the drift tube amplifier;

FIG. **2** is a schematic of an embodiment of the drift tube amplifier; and

FIG. **3** is a top view of an embodiment of the silkscreen printed circuit board of the drift tube amplifier.

DETAILED DESCRIPTION OF THE EMBODIMENTS

The preferred embodiment of the present invention is illustrated by way of example below and in FIGS. **1-3**. As seen in FIG. **1**, the drift tube amplifier **10** includes a current-to-voltage converter **100** for converting extremely low input current **20** to a voltage, a band pass filter assembly **200** for reducing unwanted noise within the voltage, a voltage controlled amplifier **300** for adjusting the output voltage level, and a logarithmic ratio converter **400** for converting the voltage from linear to LOG scale, thereby increasing the dynamic range of the output voltage **30**.

In the description of the present invention, the invention will be discussed in a chemical agent detection system environment; however, this invention can be utilized for any type of need that requires use of an amplifier.

The current-to-voltage converter **100** converts extremely low input current **20** to a voltage. Typically ion detectors emit a low current that is difficult to detect. In operation, this low current would be in ambient air as a result of ions in the air striking a Faraday Cup. The resultant current is the input **20** into the current-to-voltage converter **100**. The low current is converted by the current-to-voltage converter **100** into a voltage. As shown in FIG. **2**, the current-to-voltage converter **100** may include a converter **101**, capacitors **102** and resistors **103**. The preferred converter **101**, capacitor **102**, and resistor **103** configuration of the current-to-voltage converter **100** is shown in FIGS. **2** and **3**. The preferred capacitance and resistance of the components are shown in FIG. **2** next to each respective component.

After being converted by the current-to-voltage converter **100**, the voltage then passes to and through the band pass filter assembly **200**. The band pass filter assembly **200** reduces noise such as wide band noise and/or interference. The band pass filter assembly **200** may be one filter, a group of filters with various electronic components or any type of filter configuration practicable. The band pass filter assembly **200** may include a first order band pass filter **201** and a set of inverting and non-inverting filters. In the preferred embodiment of the invention, as seen in FIG. **1**, after exiting the current-to-voltage converter **100**, the voltage passes through a first order band pass filter **201**. As seen in FIG. **2**, the first order band pass filter **201** includes a high pass filter **204** (which includes 2 capacitors **206** in series) and a low pass filter **205** (which includes a filter **207**, a capacitor **206** and resistors **208**). The preferred filter **207**, capacitor **206**, and resistor **208** configuration of the first order band pass filter assembly **201** is shown in FIGS. **2** and **3**. The preferred capacitance and resistance of the components are shown in FIG. **2** next to each respective component.

In the preferred embodiment of the invention, after leaving the first order band pass filter **201**, the voltage enters an inverting/non-inverting stage. Some chemical agents produce positive ions while other agents produce negative ions. The processor detection algorithms within the processor board **50** of the chemical detection system are typically designed to work with a positive signal only; therefore, a negative signal (current/voltage from negative ions) must be converted to a positive signal for the chemical detection system to be effective. Negative voltage, derived from negative current/input **20** (which is derived from negative ions), enters an inverting second order low pass filter **202**. The inverting second order low pass filter **202** inverts and changes the negative voltage into a positive voltage. Positive voltage, derived from positive current/input **20** (which is derived from positive ions) enters a non-inverting second order low pass filter **203**. Each of these filters **202**, **203** may include resistors **208** and capacitors **206**. The preferred filter **202**, **203**, capacitor **206**, and resistor **208** configuration of the inverting filter **202** and the non-inverting filter **203** is shown in FIGS. **2** and **3**. The preferred capacitance and resistance of the components are shown in FIG. **2** next to each respective component.

After passing one of the second order low pass filters (the inverting **202** or the non-inverting **203**), the voltage enters a polarity switch **250**, whereby the voltage from either second order low pass filter (**202** or **203**) may be passed to the voltage controlled amplifier **300**. The polarity switch **250** may be electronically controlled by a processor or any type of apparatus practicable.

After leaving the polarity switch **250**, the voltage then passes to the voltage controlled amplifier **300**. The voltage controlled amplifier **300** may be attached to a remote gain control **500**. The remote gain control **500** allows the operator, a processor or a computer to remotely adjust the output voltage **30** level. The remote gain control **500** may communicate with the voltage controlled amplifier **300** via a DC signal or any type of method practicable. A precision IC multiplier may be used to remotely adjust the amplifier gain. In order to keep unwanted signal interference to a minimum, a DC gain control configuration may be utilized. This allows the aggressive filtering of disruptive 60Hz line power interference. The preferred electronic configuration of the remote control gain **500** is shown in FIG. **2**. The gain is controlled via adjusting $V_{CONTROL}$ in Equation 1 ($V_{CONTROL}$ is a DC Voltage) using a remote potentiometer for manual adjustment or a digital-to-analog converter (DAC) for computer control in the automatic gain control (AGC) mode. In the preferred embodiment of the invention, the gain control is described by the following equation:

$$V_{OUT} = \frac{V_{CONTROL} * V_{SIGNAL}}{0.1} \quad \text{(Equation 1)}$$

whereby V_{out} is the gain adjusted output signal (the voltage exiting the voltage controlled amplifier **300**), $V_{CONTROL}$ is the controlling DC voltage, and V_{signal} is the input to the voltage controlled amplifier (the voltage entering the voltage controlled amplifier **300**).

After the output voltage level is adjusted, the voltage then enters a logarithmic ratio converter **400**, which converts the voltage from linear to logarithmic (LOG) scale. This conversion creates a compressive effect and increases the dynamic range of the output **30**. In the preferred embodiment of the invention, the following equation represents the general form of the conversion of the logarithmic ratio converter **400**:

$$V_{LOG} = V_{REF} - \left(\frac{Resistor411}{Resistor421}\right) * \text{LOG}\frac{I_{REF}}{I_{SIGNAL}} \quad \text{(Equation 2)}$$

wherein V_{LOG} is the output voltage exiting the logarithmic ratio converter **400**, V_{REF} is full scale output reference voltage, I_{REF} is a reference current, I_{SIGNAL} is the signal current (the current entering the drift tube amplifier **10**), Resistor**411** is the resistance of a particular resistor **411** disposed within the logarithmic ratio converter **400**, Resistor**421** is the resistance of another particular resistor **421** disposed within the logarithmic ratio converter **400**. The reference current, I_{REF}, may be created by a precision voltage reference **440** and an operational amplifier **450**. The precision voltage reference **440** may generate about 10 volts. As seen in FIG. **2**, the precision voltage reference **440** and the operational amplifier **450** may electronically communicate with the logarithmic ratio converter **400**. In the preferred embodiment the value of the term or ratio (Resistor**411**/Resistor**421**) is two (2), as shown in Equation 3:

$$V_{LOG} = V_{REF} - \left(\frac{2}{1}\right) * \text{LOG}\frac{I_{REF}}{I_{SIGNAL}} \quad \text{(Equation 3)}$$

In the preferred embodiment, the logarithmic ratio converter **400** includes a log ratio amplifier **405**, a scaling amplifier **410** and a second order low pass filter **420**. The log ratio amplifier **405** computes the log ratio of an input current relative to the reference current. After passing through the log ratio amplifier **405**, the voltage (now in LOG form) then enters the scaling amplifier **410** that shifts and scales the output level to the desired range for the system processor or processor board **50** (typically configured from about 0 to about 10V). The voltage then passes through the second order low pass filter **420** and then to an output buffer **430**. The logarithmic ratio converter **400** may include capacitors **401**, resistors **402**, filters **403** and amplifiers. The preferred filter **403**, capacitor **401**, and resistor **402** configuration of the logarithmic ratio converter **400** is shown in FIGS. **2** and **3**. The preferred capacitance and resistance of the components are shown in FIG. **2**.

The output buffer **430** may include a first order low pass filter **431**, as well as capacitors **432** and resistors **433**. After exiting the output buffer **430**, the voltage/output **30** is then passed to a processing board **50** to determine if any and/or what kind of chemical agents are present. The preferred filter **431**, capacitor **432** and resistor **433** configuration of the output buffer **430** is shown in FIG. **2**. The preferred capacitance and resistance of the components are shown in FIG. **2**.

In addition, as seen in FIG. **2**, the drift tube amplifier **10** may include decoupling capacitors **600**. The decoupling capacitors **600** are electronically communicating with the drift tube amplifier **10** such that the decoupling capacitors **600** reduce power noise from any type of power source used. The decoupling capacitors **600** may be disposed between the power source and the drift tube amplifier **10** (specifically between the power source and the components of the drift tube amplifier **10** that are being supplied power). The decoupling capacitors **600** also may minimize glitches on the power supply induced during signal transitions within active semiconductor integrated circuits.

FIG. **3** shows the preferred embodiment of a top view of the silkscreen printed circuit board of the drift tube amplifier.

The method to amplify current includes converting a current to a voltage, reducing unwanted noise within the voltage, adjusting the output voltage level, and converting the voltage from linear to LOG scale, thereby increasing the dynamic range of the output. The output voltage level may be adjusted by passing the voltage through a band pass filter assembly or a series of filters. The preferred band pass filter assembly **200** is described above. The output voltage level may be adjusted utilizing a remote gain control **500**, and may be adjusted utilizing the configuration described above. The voltage may be converted utilizing a system described above.

When introducing elements of the present invention or the preferred embodiment(s) thereof, the articles "a," "an," "the," and "said" are intended to mean there are one or more of the elements. The terms "comprising," "including," and "having" are intended to be inclusive and mean that there may be additional elements other than the listed elements.

Although the present invention has been described in considerable detail with reference to certain preferred embodiments thereof, other embodiments are possible. Therefore, the spirit and scope of the appended claims should not be limited to the description of the preferred embodiments contained herein.

What is claimed is:

1. A drift tube amplifier, the drift to be amplifier having an input and an output, the drift tube amplifier comprising:

a current-to-voltage converter for converting extremely low input current to a voltage;

a first order band pass filter for reducing unwanted noise within the voltage, the first order band pass filter electronically communicating with the current-to voltage converter; an inverting second order loss pass filter electronically communicating with the first order band pass filter;

a non-inverting second order low pass filter electronically communicating with the first order band pass filter;

a polarity switch, wherein negative voltage passing from the first order band pass filter enters the inverting second order low pass filter, and positive voltage passing from the first order band pass filter enters the non-inverting second order low pass filter such that both negative voltage and positive voltage is passed as positive voltage to the polarity switch, the polarity switch electronically communicating with the inverting second order low pass filter and the non-inverting second order low pass filter;

a voltage controlled amplifier for adjusting the output voltage level of voltage from the polarity switch, the voltage controlled amplified electronically communicating with the polarity switch;

a logarithmic ratio converter for converting the voltage from linear to LOG scale, thereby increasing the dynamic range of the output, the logarithmic ratio converter includes a log ratio amplifier for computing the log ratio of an input current relative to a reference current, a scaling amplifier for shifting and scaling the output level to a desired range and a second order low pass filter, whereby the voltage passes through each of these, the logarithmic ratio converter electronically communicating with the voltage controlled amplifier;

an output buffer, the output buffer passing the LOG scale voltage to a processor board, the output buffer electronically communicating with the logarithmic ratio converter; and, a gain-control for remotely adjusting the output voltage level.

2. The drift tube amplifier of claim **1**, wherein the gain control is described by the following equation:

$$V_{OUT} = \frac{V_{CONTROL} * V_{SIGNAL}}{0.1},$$

whereby V_{out} is the voltage exiting the voltage controlled amplifier, $V_{CONTROL}$ is controlling DC voltage, and V_{signal} is input to the voltage controlled amplifier.

3. The drift tube amplifier of claim **2**, wherein the following equation represents the general form of the conversion made by the logarithmic ratio converter;

$$V_{LOG} = V_{REF} - \left(\frac{2}{1}\right) * \mathrm{LOG}\frac{I_{REF}}{I_{SIGNAL}},$$

wherein V_{LOG} is the output voltage exiting the logarithmic ratio converter, V_{REF} is full scale output reference voltage, I_{REF} is a reference current, and I_{SIGNAL} is the current entering the drift tube amplifier.

4. The drift tube amplifier of claim **3**, wherein the reference current is created by a precision voltage reference and an operational amplifier.

5. The drift tube amplifier of claim **1**, wherein the input current is from ions in ambient air striking a Faraday Cup and the output is passed to the processor board for determination of chemical agent presence.

6. The drift tube amplifier of claim **5**, wherein the drift tube amplifier further includes decoupling capacitors, the decoupling capacitors in electronic communication with the drift tube amplifier such that the decoupling capacitors reduce power noise from any type of power source.

7. The drift tube amplifier of claim **6**, wherein the output buffer includes a first order low pass filter, capacitors and resistors electronically communicating with each other.

8. The drift tube amplifier of claim **1**, wherein the first order band pass filter includes a high pass filter and a low pass filter arranged in series.

9. The drift tube amplifier of claim **8**, wherein the high pass filter is two capacitors in series.

* * * * *