US008402892B1

(12) **United States Patent**
Scheid et al.

(10) **Patent No.: US 8,402,892 B1**
(45) **Date of Patent: Mar. 26, 2013**

(54) **SIMULTANEOUS NONELECTRIC PRIMING ASSEMBLY AND METHOD**

(75) Inventors: **Eric Scheid**, Bloomington, IN (US); **Brad Moan**, Greenwood, IN (US); **Thomas Gailey**, Spring Lake, NC (US)

(73) Assignee: **The United States of America as represented by the Secretary of the Navy**, Washington, DC (US)

(*) Notice: Subject to any disclaimer, the term of this patent is extended or adjusted under 35 U.S.C. 154(b) by 195 days.

(21) Appl. No.: **12/982,658**

(22) Filed: **Dec. 30, 2010**

(51) **Int. Cl.**
C06C 5/06 (2006.01)

(52) **U.S. Cl.** **102/275.12**; 102/275.4; 102/275.5; 102/275.6; 102/275.7; 102/217

(58) **Field of Classification Search** 102/206, 102/217, 275.4, 275.5, 275.6, 275.7, 275.12, 102/275.11
See application file for complete search history.

(56) **References Cited**

U.S. PATENT DOCUMENTS

3,896,731	A	7/1975	Kilmer	
4,023,493	A	5/1977	Austin et al.	
4,187,780	A	2/1980	Petruccelli	
4,282,814	A	8/1981	Menz et al.	
4,426,933	A *	1/1984	Yunan	102/275.3
4,442,776	A *	4/1984	Jones	102/275.12
4,481,884	A	11/1984	Yunan	
4,637,312	A	1/1987	Adams et al.	
4,722,279	A	2/1988	Yunan	
5,012,741	A *	5/1991	Peebles et al.	102/275.4
5,171,935	A	12/1992	Michna et al.	
5,204,492	A	4/1993	Jacob et al.	
5,499,581	A	3/1996	Sutula	
5,661,256	A	8/1997	Sutula et al.	
5,665,932	A	9/1997	Viljoen et al.	
5,708,228	A	1/1998	Sutula et al.	
5,747,722	A	5/1998	Gladden et al.	
5,792,975	A *	8/1998	Tseka et al.	102/275.7
6,305,287	B1	10/2001	Capers et al.	
6,425,332	B1	7/2002	Capers et al.	
6,513,437	B2	2/2003	Chan et al.	
6,681,701	B2	1/2004	Perry	
7,000,545	B2 *	2/2006	Sansolo	102/331
7,086,335	B2	8/2006	O'Brien et al.	
7,188,566	B2	3/2007	Gladden	
7,661,365	B2 *	2/2010	Chan	102/275.12
7,699,004	B2	4/2010	Muro	

(Continued)

FOREIGN PATENT DOCUMENTS

EP 0083165 7/1983

OTHER PUBLICATIONS

Owen Oil Tools LP, "Redundant Annulus Pressure Firing System" [MAN-TC-021 (Ros)] brochure, 2009, 20 pages, downloaded on Oct. 13, 2010 from http://www.corelab.com/pe/owen/CMS/PDF/Manuals/tcp/MAN-TC-021.pdf.

Primary Examiner — James Bergin
(74) *Attorney, Agent, or Firm* — Christopher A. Monsey

(57) **ABSTRACT**

A priming assembly and a method are provided for coupling a plurality of detonators to at least one explosive through a plurality of transmission lines. The priming assembly may include a housing that receives the plurality of detonators and the plurality of transmission lines. In use, the plurality of transmission lines may communicate with the plurality of detonators within the housing to transmit explosive charges from the plurality of detonators to the at least one explosive.

18 Claims, 4 Drawing Sheets

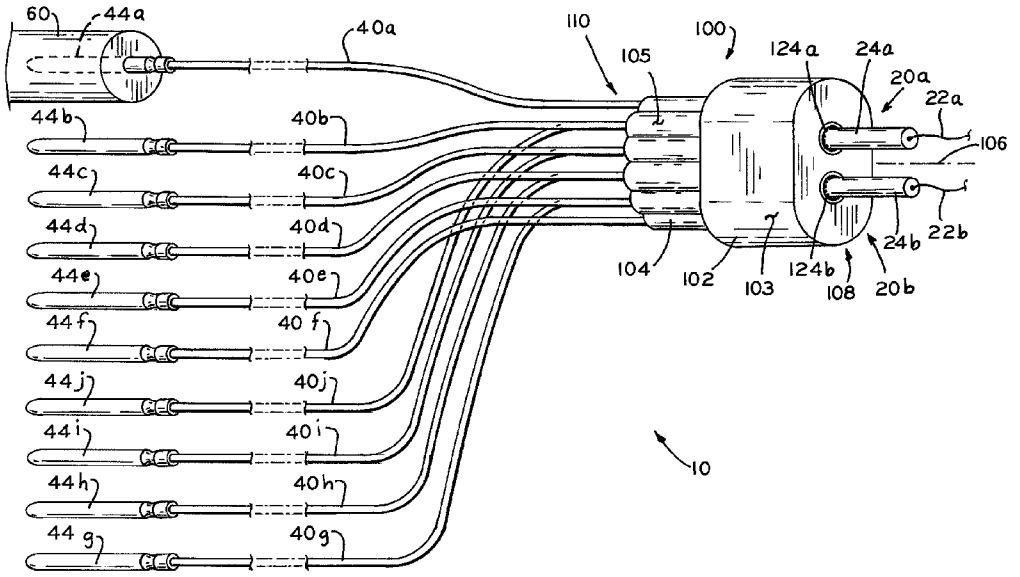

U.S. PATENT DOCUMENTS

7,739,954 B2 6/2010 Chan et al.
7,798,065 B2 * 9/2010 Chan et al. 102/275.12
7,891,296 B2 * 2/2011 Husk et al. 102/275.7
2009/0071362 A1 3/2009 Scheid

* cited by examiner

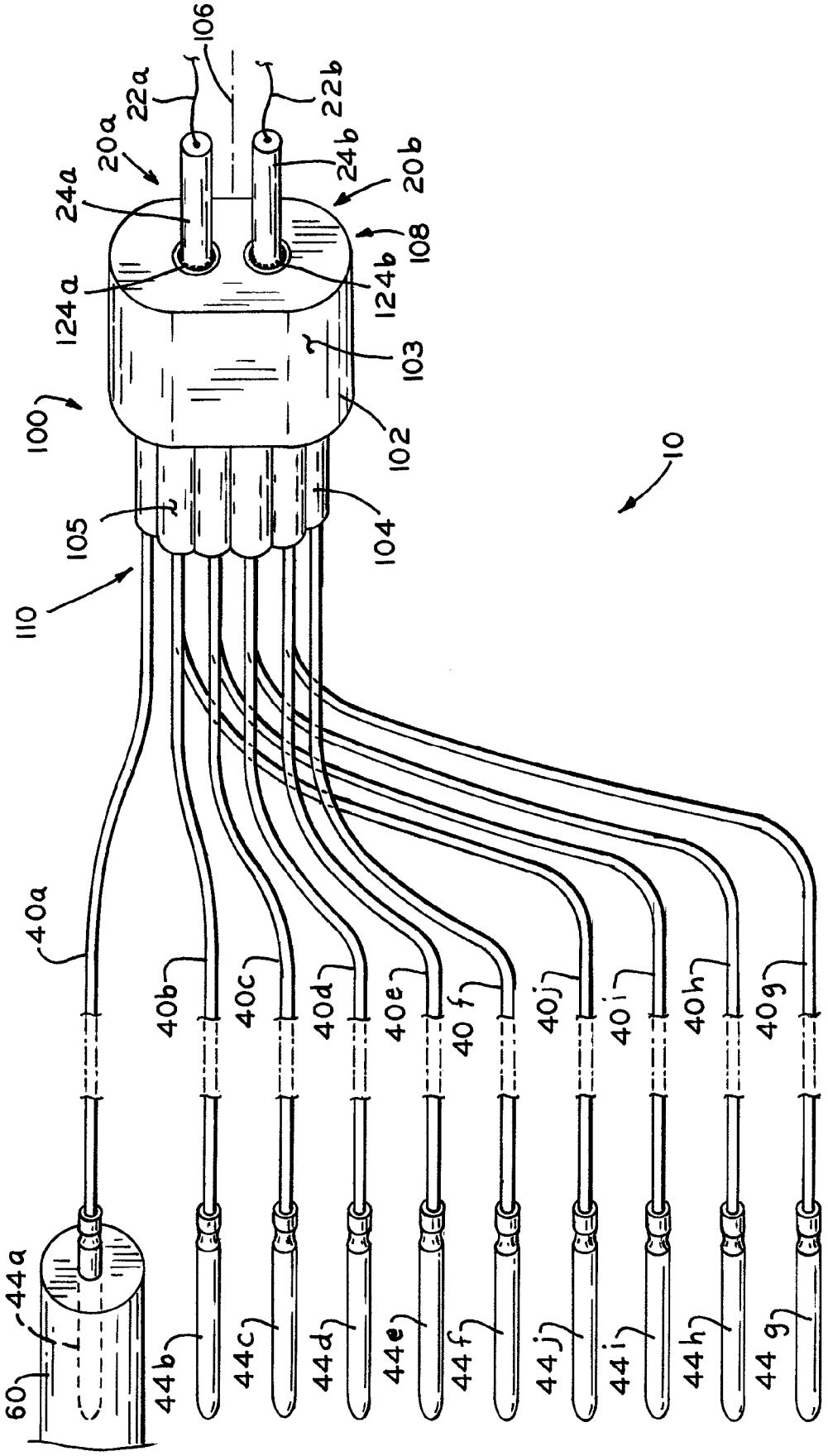
106
22a
22b
20a
24a
24b
20b
108
124a
124b
103
100
102
10
105
104
110
40a
40b
40c
40d
40e
40f
40j
40i
40h
40g
44a
60
44b
44c
44d
44e
44f
44j
44i
44h
44g

FIG. 1

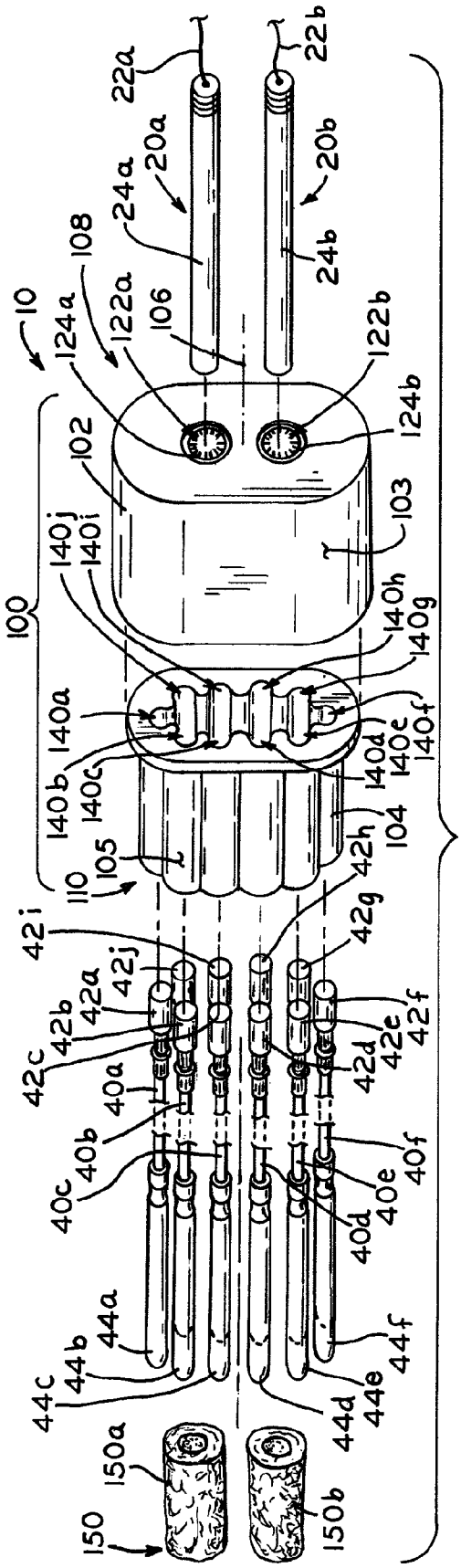
10
100
102
103
104
105
106
108
110
20a
20b
22a
22b
24a
24b
122a
122b
124a
124b
140a
140b
140c
140d
140e
140f
140g
140h
140i
140j
40a
40b
40c
40d
40e
40f
42a
42b
42c
42d
42e
42f
42g
42h
42i
42j
44a
44b
44c
44d
44e
44f
150
150a
150b

FIG. 2

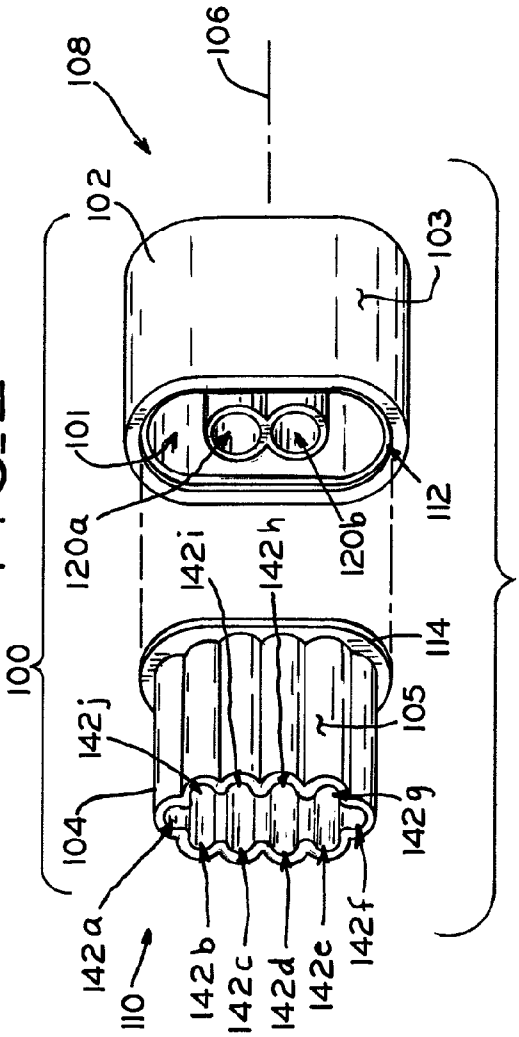
100
101
102
103
104
105
106
108
110
112
114
120a
120b
142a
142b
142c
142d
142e
142f
142g
142h
142i
142j

FIG. 3

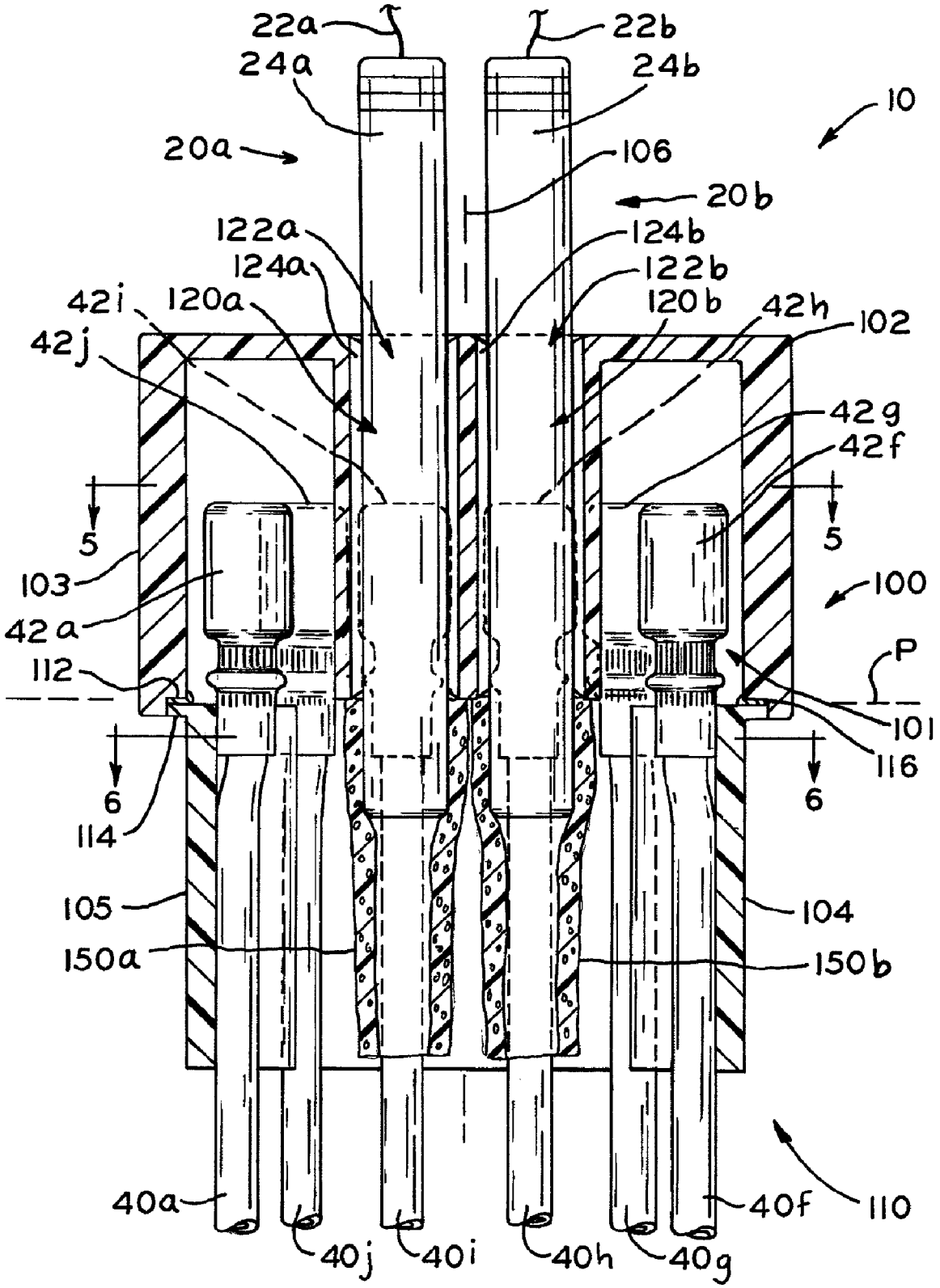
22a
22b
24a
24b
10
20a
106
20b
122a
124b
124a
122b
42i
120a
120b
42h
102
42j
42g
42f
5
5
103
100
42a
P
112
101
116
6
6
114
105
104
150a
150b
110
40a
40f
40j
40i
40h
40g

FIG_4

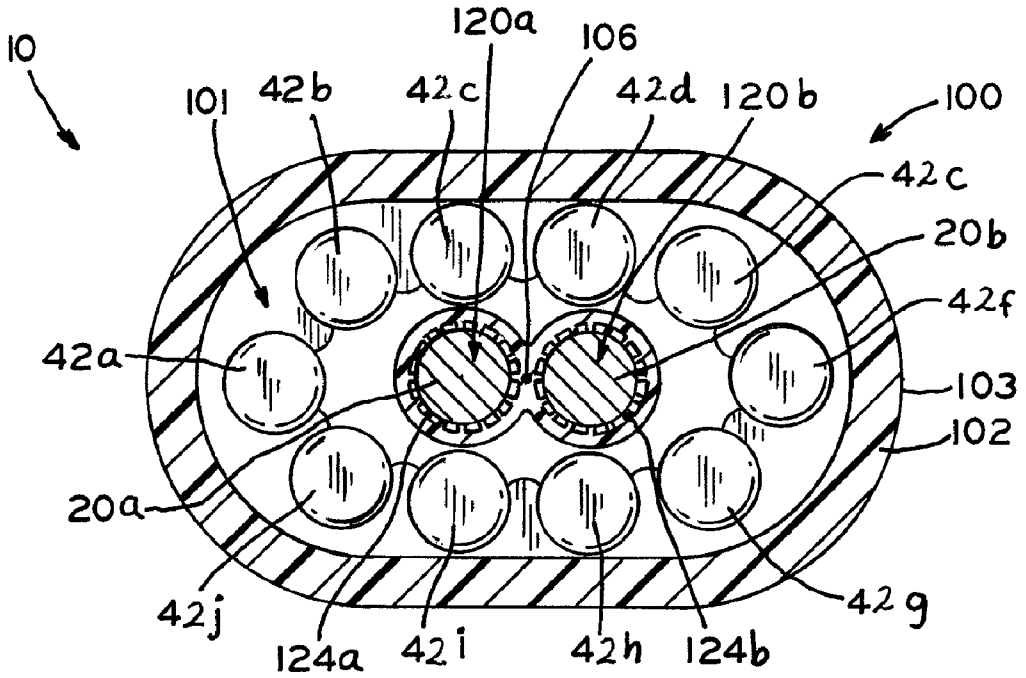
10
101
42b
42c
120a
106
42d
120b
100
42c
20b
42f
42a
103
102
20a
42j
124a
42i
42h
124b
42g

FIG_5

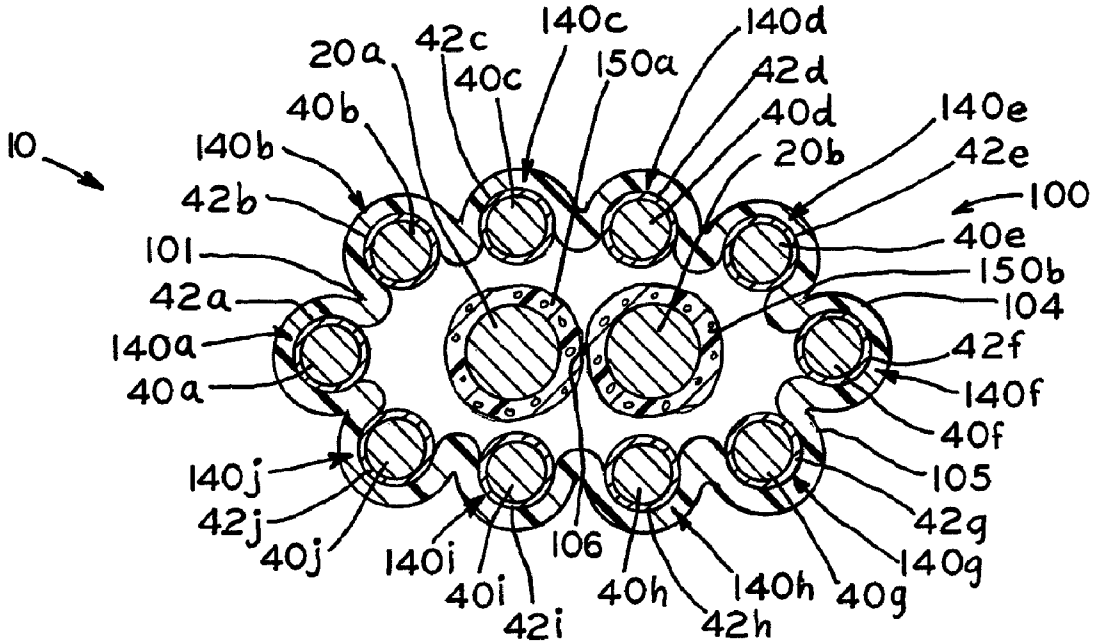
10
20a
42c
140c
140d
40c
150a
42d
40b
40d
140e
140b
20b
42e
42b
100
101
40e
150b
42a
104
140a
42f
40a
140f
40f
140j
105
42j
42g
40j
140i
106
140g
40i
40h
140h
40g
42i
42h

FIG_6

SIMULTANEOUS NONELECTRIC PRIMING ASSEMBLY AND METHOD

STATEMENT REGARDING FEDERALLY SPONSORED RESEARCH OR DEVELOPMENT

The invention described herein includes contributions by one or more employees of the Department of the Navy made in performance of official duties and may be manufactured, used and licensed by or for the United States Government for any governmental purpose without payment of any royalties thereon.

BACKGROUND AND SUMMARY OF THE DISCLOSURE

The present disclosure relates to a priming assembly and a method for coupling a plurality of detonators to at least one explosive through a plurality of transmission lines.

To perform certain mining operations, excavation operations, drilling operations, demolition operations, and military operations, for example, an explosive may be placed at a blasting site. To ensure the safety of a user, the user may trigger and detonate the explosive from a location remote from the blasting site.

According to an illustrative embodiment of the present disclosure, a priming assembly is provided for coupling a plurality of detonators to at least one explosive through a plurality of transmission lines. The priming assembly includes a housing having an outer wall, the housing extending along a longitudinal axis from a first end to a second end. The housing defines a plurality of detonator receptacles that are configured to receive the plurality of detonators and a plurality of transmission line receptacles that are configured to receive the plurality of transmission lines, each of the plurality of transmission line receptacles being semi-circular in shape to retain the plurality of transmission lines and to position the plurality of transmission lines relative to the plurality of detonators in the plurality of detonator receptacles while exposing the plurality of transmission lines to the plurality of detonators in the plurality of detonator receptacles such that an explosive charge from at least one of the plurality of detonators is communicated to the plurality of transmission lines and to the at least one explosive.

According to another illustrative embodiment of the present disclosure, a priming assembly is provided that includes a plurality of detonators, at least one of the plurality of detonators being configured to generate an explosive charge, a plurality of transmission lines, at least one explosive, and a housing having a plurality of detonator receptacles that are sized to receive the plurality of detonators and a plurality of transmission line receptacles that are sized to receive the plurality of transmission lines, each of the plurality of transmission line receptacles being semi-circular in shape to retain the plurality of transmission lines and to position the plurality of transmission lines relative to the plurality of detonators in the plurality of detonator receptacles while exposing the plurality of transmission lines to the plurality of detonators in the plurality of detonator receptacles such that the explosive charge from the at least one detonator is communicated to the plurality of transmission lines and to the at least one explosive.

According to yet another illustrative embodiment of the present disclosure, a method is provided for coupling a first detonator and a second detonator to at least one explosive. The method includes the steps of: providing a housing that includes a first detonator receptacle, a second detonator receptacle, and a plurality of transmission line receptacles, the plurality of transmission line receptacles receiving a plurality of transmission lines; inserting the first detonator into the first detonator receptacle of the housing to communicate with the plurality of transmission lines; inserting the second detonator into the second detonator receptacle of the housing to communicate with the plurality of transmission lines; and coupling the plurality of transmission lines to the at least one explosive.

According to still yet another illustrative embodiment of the present disclosure, a method is provided for manufacturing a priming assembly for coupling a plurality of detonators to at least one explosive through a plurality of transmission lines. The method includes the steps of: forming a housing that includes an outer wall defining an interior of the housing, a plurality of detonator receptacles in the interior of the housing, and a plurality of transmission line receptacles in the interior of the housing, the plurality of detonator receptacles being sized to receive the plurality of detonators and the plurality of transmission line receptacles being sized to receive the plurality of transmission lines, at least one of the plurality of transmission line receptacles communicating with the plurality of detonator receptacles within the housing; and inserting the plurality of transmission lines into the plurality of transmission line receptacles in the housing, at least one of the plurality of transmission lines communicating with the plurality of detonator receptacles within the housing.

BRIEF DESCRIPTION OF THE DRAWINGS

The above-mentioned and other features and advantages of this invention, and the manner of attaining them, will become more apparent and the invention itself will be better understood by reference to the following description of embodiments of the invention taken in conjunction with the accompanying drawings, wherein:

FIG. **1** is a front, assembled perspective view of an illustrative embodiment priming assembly that includes a housing for coupling a plurality of detonators to at least one explosive through a plurality of transmission lines;

FIG. **2** is a front, exploded perspective view of the priming assembly of FIG. **1**, also showing a booster material that is located within the housing;

FIG. **3** is a rear, exploded perspective view of the housing of FIG. **3**;

FIG. **4** is a cross-sectional view of the priming assembly of FIG. **1**;

FIG. **5** is a cross-sectional view of the priming assembly of FIG. **4**, taken along line **5-5** of FIG. **4**; and

FIG. **6** is another cross-sectional view of the priming assembly of FIG. **4**, taken along line **6-6** of FIG. **4**.

Corresponding reference characters indicate corresponding parts throughout the several views. The exemplifications set out herein illustrate exemplary embodiments of the invention and such exemplifications are not to be construed as limiting the scope of the invention in any manner.

DETAILED DESCRIPTION OF THE DRAWINGS

Referring to FIG. **1**, a priming assembly **10** is provided that includes a housing **100** for coupling a plurality of detonators **20** to at least one explosive **60** through a plurality of nonelectric transmission lines **40**. Although only a single explosive **60** is shown in FIG. **1**, it is within the scope of the present disclosure that priming assembly **10** may include a plurality of explosives **60**, with each explosive **60** being coupled to a corresponding transmission line **40**.

In use, a signal is sent to detonate or trigger both detonators **20**. If both detonators **20** detonate substantially simultaneously (i.e., within 0.000001 seconds of one another), explosive charges from both detonators **20** may pass simultaneously to the plurality of transmission lines **40** in housing **100**. Even if one detonator **20** should fail, the explosive charge from the functioning detonator **20** may still pass simultaneously to the plurality of transmission lines **40** in housing **100**. For example, if the detonators **20** do not detonate substantially simultaneously (i.e., within 0.000001 seconds of one another), the first detonator will consume the second detonator, but the explosive charge from the first, functioning detonator may still pass to the plurality of transmission lines **40** in housing **100**. The explosive charge from one or both detonators **20** is conveyed or transmitted along transmission lines **40** to explosives **60**, which may be located at a remote blasting site, causing explosives **60** to detonate. In this embodiment, housing **100** may enable multiple transmission lines **40**, and in turn multiple explosives **60**, to detonate substantially simultaneously (e.g., within microseconds of one another), even when one detonator **20** may fail. Advantageously, housing **100** may accomplish this task reliably, safely, under potentially adverse weather conditions, nonelectrically, and/or inexpensively.

If priming assembly **10** were to include a single detonator **20**, instead of the plurality of detonators **20** of FIG. **1**, a dangerous condition may result if that single detonator **20** failed. For example, a user would need to use extreme care and caution when handling the failed detonator **20** to avoid an unwanted detonation of detonator **20** and/or explosive **60**. On the other hand, by providing priming assembly **10** with a plurality of detonators **20**, the likelihood that at least one of the plurality of detonators **20** will function properly increases.

The illustrative embodiment priming assembly **10** includes two (2) detonators **20***a*, **20***b*, although the number of detonators **20** may vary. For example, it is within the scope of the present disclosure that priming assembly **10** may include three (3), four (4), or more detonators **20**.

Detonators **20***a*, **20***b*, may also be referred to as "blasting caps." As shown in FIG. **2**, each detonator **20***a*, **20***b*, includes a corresponding signal line **22***a*, **22***b*, and casing **24***a*, **24***b*. Casing **24***a*, **24***b*, of each detonator **20***a*, **20***b*, contains a relatively sensitive, primary explosive material (not shown), which is less stable, and therefore easier to ignite, than the secondary explosive material (not shown) contained in explosives **60**. Because detonators **20***a*, **20***b*, may easily ignite, detonators **20***a*, **20***b*, should be stored apart from explosives **60**.

The types of detonators **20***a*, **20***b*, used with priming assembly **10** may vary. Suitable detonators **20***a*, **20***b*, include, for example, non-electric caps, electric caps which are triggered by an electric current, and fuse caps which are triggered with a match or another heat source. An illustrative detonator **20** is the MK **17** Electric Blasting Cap which is triggered by an electric current.

The primary explosive material contained in detonators **20***a*, **20***b*, may also vary. Suitable primary explosive materials for use in detonators **20***a*, **20***b*, include, for example, pentaerythritol tetranitrate (PETN), cyclotrimethylenetrinitramine (RDX), mercury fulminate, lead azide, lead styphnate, tetryl, and diazodinitrophenol (DDNP).

Additionally, the illustrative embodiment priming assembly **10** includes ten (10) nonelectric transmission lines **40***a*-**40***j*, although the number of transmission lines **40** may vary. For example, it is within the scope of the present disclosure that priming assembly **10** may include two (2), three (3), four (4), five (5), six (6), seven (7), eight (8), nine (9), eleven (11), twelve (12), thirteen (13), fourteen (14), or more transmission lines **40**. In certain embodiments, the number of transmission lines **40** may vary based on the number of explosives **60** provided.

Transmission lines **40***a*-**40***j* may be provided in the form of "detonating cords" or "detcords," for example, that are produced in accordance with the cut-off characteristics of PER14000035C, paragraph 3.5.1.1.2. Transmission lines **40***a*-**40***j* may also be provided in the form of "shocktubes." Each transmission line **40***a*-**40***j* may include a flexible, hollow tube that contains a secondary explosive material (not shown). The secondary explosive material in each transmission line **40***a*-**40***j* may convey or transmit the explosive charges from one or both detonators **20***a*, **20***b*, to explosives **60**, allowing transmission lines **40***a*-**40***j* to act as high-speed fuses.

The type and quantity of the secondary explosive material contained in transmission lines **40***a*-**40***j* may vary. In the case of "detonating cords," a suitable secondary explosive material for use in transmission lines **40***a*-**40***j* includes, for example, pentaerythritol tetranitrate (PETN). In the case of "shocktubes," a suitable secondary explosive material for use in transmission lines **40***a*-**40***j* includes, for example, a mixture of cyclotetramethylene-tetranitramine (HMX) and aluminum. Also, suitable transmission lines **40***a*-**40***j* may contain 5 grains of explosive per foot, for example, although it is also within the scope of the present disclosure that transmission lines **40***a*-**40***j* may contain 0.1 grains of explosive per foot, 2.5 grains of explosive per foot, 7.5 grains of explosive per foot, 10 grains of explosive per foot, or **50** grains of explosive per foot, for example.

The speed at which an explosive charge travels through each transmission line **40***a*-**40***j* may be substantially consistent. For example, in the case of "detonating cords," the explosive charge may consistently travel through each transmission line **40***a*-**40***j* at a speed between about 6,000 m/s and 6,800 m/s, and in the case of "shocktubes", the explosive charge may consistently travel through each transmission line **40***a*-**40***j* at a speed of about 2,000 m/s. By providing transmission lines **40***a*-**40***j* of different lengths, a user may detonate multiple explosives **60** at different, yet controlled, times. For example, the user may detonate multiple explosives **60** in a specific order to control the collapse of a building. By providing transmission lines **40***a*-**40***j* of the same length, on the other hand, the user may detonate multiple explosives **60** substantially simultaneously. Alternatively, a user may control the timing of detonating multiple explosives **60** using suitable delay detonators.

As shown in FIG. **2**, each transmission line **40***a*-**40***j* includes a corresponding, optional seal **42***a*-**42***j* coupled to one end (i.e., the end closest to housing **100**) and a corresponding cartridge **44***a*-**44***j* coupled to the other end (i.e., the end closest to explosives **60**). In certain embodiments, such as when transmission lines **40***a*-**40***j* are provided in the form of "detonating cords," cartridges **44***a*-**44***j* may be provided in the form of booster cartridges that contain a secondary explosive material (e.g., pentaerythritol tetranitrate (PETN)). In other embodiments, such as when transmission lines **40***a*-**40***j* are provided in the form of "shocktubes," cartridges **44***a*-**44***j* may be provided in the form of nonelectric detonator cartridges that contain both a primary explosive material and a secondary explosive material. Each booster cartridge **44***a*-**44***j* may act as a bridge between its corresponding transmission line **40***a*-**40***j* and explosive **60**. As an alternative to seals **42***a*-**42***j*, it is also within the scope of the present disclosure that, on the end closest to housing **100**, each transmission line **40***a*-**40***j* may include a second cartridge similar to cartridges **44***a*-**44***j*

to act as a bridge between detonators **20***a*, **20***b*, and its corresponding transmission line **40***a*-**40***j*.

The illustrative embodiment priming assembly **10** further includes one or more explosives **60**. In certain embodiments, each transmission line **40** is coupled to its own individual explosive **60**. For example, because the illustrative embodiment priming assembly **10** of FIG. **1** has ten (10) transmission lines **40***a*-**40***j*, ten (10) explosives **60** may be provided, with each transmission line **40***a*-**40***j* being coupled to its own individual explosive **60** (although only a single explosive **60** is shown in FIG. **1**). In other embodiments, more than one transmission lines **40***a*-**40***j* may be coupled to a single explosive **60**.

In use, explosives **60** may be placed at a blasting site. For example, explosives **60** may be placed at the site of an excavation operation, a drilling operation, a demolition operation, a military operation, or another suitable operation. Transmission lines **40***a*-**40***j* span between detonators **20***a*, **20***b*, and explosives **60**, allowing the user to safely trigger detonators **20***a*, **20***b*, at a location remote from the blasting site.

As discussed above, each explosive **60** may contain a relatively stable, secondary explosive material (not shown). The secondary explosive material contained in explosives **60** may vary. Suitable secondary explosive materials for use in explosives **60** include, for example, cyclotrimethylenetrinitramine (RDX), cyclotetramethylene-tetranitramine (HMX), and trinitrotoluene (TNT).

Referring next to FIGS. **2**-**4**, the illustrative housing **100** of priming assembly **10** is a multi-piece construct having first portion **102** that receives the plurality of detonators **20** and second portion **104** that receives the plurality of transmission lines **40**. However, it is also within the scope of the present disclosure that housing **100** may be a one-piece, unitary construct.

First portion **102** of housing **100** includes outer wall **103** and second portion **104** of housing **100** includes outer wall **105**. When assembled, as shown in FIG. **4**, outer walls **103**, **105**, of first and second portions **102**, **104**, cooperate to define interior **101** of housing **100** that is at least partially hollow. Housing **100** extends along longitudinal axis **106** from input end **108** to output end **110**.

As shown in FIG. **4**, first portion **102** of housing **100** defines recess **112** and second portion **104** of housing **100** includes rim **114** that is sized for receipt within recess **112**. In certain embodiments, first and second portions **102**, **104**, of housing **100** may be coupled together with a suitable adhesive **116**, as shown in FIG. **4**. In other embodiments, first and second portions **102**, **104**, of housing **100** may be coupled together with a mechanical fastener, such as a screw (not shown) or a latch (not shown), for example.

Housing **100** of priming assembly **10** may be constructed of a consumable material, such as plastic or rubber, or another suitable material. For example, depending on the amount of fragmentation produced, housing **100** may be constructed of an acrylonitrile butadiene styrene (ABS) thermoplastic, Santoprene™ thermoplastic vulcanised (TPV) rubber, or another suitable material having a hardness of about 80 Durometer. Illustrative methods of manufacturing housing **100** include, for example, injection molding.

First portion **102** of housing **100** defines a plurality of channels or receptacles **120** for receiving and supporting the plurality of detonators **20** therein. In the illustrated embodiment of FIG. **4**, for example, first portion **102** of housing **100** defines two (2) receptacles **120***a*, **120***b*, for receiving and supporting detonators **20***a*, **20***b*, respectively. However, it is within the scope of the present disclosure that first portion **102** of housing **100** may define more than two (2) receptacles **120** for receiving more than two (2) detonators **20**.

As shown in FIG. **4**, receptacles **120***a*, **120***b*, extend entirely through first portion **102** of housing **100** in a direction substantially parallel to one another and to longitudinal axis **106**. In other words, receptacles **120***a*, **120***b*, extend from input ports **122***a*, **122***b*, in input end **108** of housing **100** (FIG. **2**) toward second portion **104** of housing **100** (FIG. **3**). In this way, detonators **20***a*, **20***b*, may be inserted into input ports **122***a*, **122***b*, in input end **108** of housing **100**, through receptacles **120***a*, **120***b*, in housing **100**, and toward second portion **104** of housing **100**.

To enable housing **100** to hold detonators **20** of various shapes and sizes, each receptacle **120***a*, **120***b*, of housing **100** may include an array of radially inwardly extending, flexible fins **124***a*, **124***b*. When smaller diameter detonators **20***a*, **20***b*, are inserted into housing **100**, fins **124***a*, **124***b*, may extend radially into each receptacle **120***a*, **120***b*, to grab and hold the respective detonator **20***a*, **20***b*. On the other hand, when larger diameter detonators **20***a*, **20***b*, are inserted into housing **100**, fins **124***a*, **124***b*, may flex to increase the effective internal diameter of each receptacle **120***a*, **120***b*, thereby making room for the insertion of each detonator **20***a*, **20***b*, without causing an undue increase in the amount of force applied to each detonator **20***a*, **20***b*. In certain embodiments, fins **124***a*, **124***b*, of each receptacle **120***a*, **120***b*, may be configured to grab and hold detonators having diameters between at least 0.210 inches and 0.300 inches. To enable flexion of fins **124***a*, **124***b*, relative to housing **100**, fins **124***a*, **124***b*, may be constructed of a material that is more flexible than housing **100**. For example, fins **124***a*, **124***b*, may be constructed of thermoplastic vulcanised (TPV) rubber having a hardness of about 60 Durometer. It is also within the scope of the present disclosure that receptacles **120***a*, **120***b*, of housing **100** may include threaded inserts and priming adapters (not shown) to receive and hold detonators **20***a*, **20***b*.

Second portion **104** of housing **100** defines a plurality of channels or receptacles **140** for receiving and supporting the plurality of transmission lines **40** therein and for positioning transmission lines **40** relative to detonators **20**. In the illustrated embodiment of FIG. **4**, for example, second portion **104** of housing **100** defines ten (10) receptacles **140***a*-**140***j* for receiving and supporting transmission lines **40***a*-**40***j*, respectively. However, it is within the scope of the present disclosure that second portion **104** of housing **100** may define fewer than ten (10) receptacles **140** for receiving fewer than ten (10) transmission lines **40**, or that second portion **104** of housing **100** may define more than ten (10) receptacles **140** for receiving more than ten (10) transmission lines **40**.

As shown in FIG. **4**, receptacles **140***a*-**140***j* extend entirely through second portion **104** of housing **100** in a direction substantially parallel to one another and to longitudinal axis **106**. In other words, receptacles **140***a*-**140***j* extend from first portion **102** of housing **100** (FIG. **2**) toward output ports **142***a*-**142***j* in output end **110** of housing **100** (FIG. **3**). In certain embodiments, and as shown in FIG. **4**, seals **42***a*-**42***j* of transmission lines **40***a*-**40***j* may be sized larger than receptacles **140***a*-**140***j* to prevent transmission lines **40***a*-**40***j* from withdrawing from housing **100** through output ports **142***a*-**142***j* in output end **110** of housing **100**.

According to an exemplary embodiment of the present disclosure, receptacles **140***a*-**140***j* in second portion **104** of housing **100** may be semi-circular and partially open (FIG. **6**). Receptacles **140***a*-**140***j* may adequately surround transmission lines **40***a*-**40***j* to retain transmission lines **40***a*-**40***j* therein while preventing lateral removal of transmission lines **40***a*-**40***j* from receptacles **140***a*-**140***j*. To achieve such retention,

receptacles **140***a*-**140***j* may surround more than 180 degrees of each transmission line **40***a*-**40***j*. On the other hand, receptacles **140***a*-**140***j* may be at least partially open, leaving transmission lines **40***a*-**40***j* exposed to the explosive charge from detonators **20***a*, **20***b*. To achieve such exposure, receptacles **140***a*-**140***j* may surround less than 360 degrees of each transmission line **40***a*-**40***j*. For example, exemplary receptacles **140***a*-**140***j* may surround about 190 degrees, 200 degrees, or 210 degrees of each transmission line **40***a*-**40***j*. Receptacles **120***a*, **120***b*, in first portion **102** of housing **100**, on the other hand, may be circular to fully surround or encircle each detonator **20***a*, **20***b* (FIG. **5**).

When priming assembly **10** is assembled, transmission lines **40***a*-**40***j* may surround detonators **20***a*, **20***b*, as shown in FIG. **5**, which is a cross-section taken in a direction perpendicular to longitudinal axis **106**. In other words, detonators **20***a*, **20***b*, may extend centrally through housing **100** near longitudinal axis **106**, and transmission lines **40***a*-**40***j* may be located radially outwardly from detonators **20***a*, **20***b*, and longitudinal axis **106**.

Additionally, when priming assembly **10** is assembled, detonators **20***a*, **20***b*, and transmission lines **40***a*-**40***j* may longitudinally overlap in a direction perpendicular to longitudinal axis **106**, as shown in FIG. **4**. For example, detonators **20***a*, **20***b*, may extend beyond the interfacing plane P between first and second portions **102**, **104**, of housing **100** (i.e., the interfacing plane P that contains adhesive layer **116**) and into second portion **104** of housing **100** along with transmission lines **40***a*-**40***j*. Similarly, seals **42***a*-**42***j* may longitudinally overlap detonators **20***a*, **20***b*, in the direction perpendicular to longitudinal axis **106**, as shown in FIG. **4**. For example, seals **42***a*-**42***j* may extend beyond interfacing plane P and into first portion **102** of housing **100** along with detonators **20***a*, **20***b*.

To ensure that the explosive charge from the detonators **20***a*, **20***b*, is effectively conveyed or transmitted to transmission lines **40***a*-**40***j*, housing **100** may include or be packed with a booster material **150**, such as DETAPRIME, which is a flexible material that includes pentaerythritol tetranitrate (PETN). Booster material **150** may amplify or "boost" the energy released by detonators **20***a*, **20***b*, to ensure that sufficient energy is delivered to detonate transmission lines **40***a*-**40***j* and, in turn, to detonate cartridges **44***a*-**44***j* and explosives **60**. The quantity of booster material **150** provided in housing **100** and the distance, if any, separating booster material **150** from detonators **20***a*, **20***b*, and/or transmission lines **40***a*-**40***j* may vary to achieve an effective communication of the explosive charge from detonators **20***a*, **20***b*, to transmission lines **40***a*-**40***j*.

Booster material **150** may surround receptacles **120***a*, **120***b*, in first portion **102** of housing **100** and/or may extend between receptacles **140***a*-**140***j* in second portion **104** of housing **100**. In the illustrated embodiment of FIGS. **2** and **4**, for example, booster material **150** includes two (2), hollow tubes **150***a*, **150***b*, located between receptacles **140***a*-**140***j* in second portion **104** of housing **100**, each booster tube **150***a*, **150***b*, configured to receive a corresponding detonator **20***a*, **20***b*, therein. Because transmission lines **40***a*-**40***j* may be surrounded by receptacles **140***a*-**140***j* on one side (i.e., the side closest to outer wall **105**) and exposed on the other side (i.e., the side closest to the hollow interior **101** of housing **100**), transmission lines **40***a*-**40***j* may be exposed to booster material **150**.

The manner in which booster material **150** is retained within housing **100** may vary. In certain embodiments, booster material **150** may be retained within housing **100** by way of a friction-fit with detonator **20***a*, **20***b*, transmission lines **40***a*-**40***j*, and/or part of housing **100**. In other embodiments, booster material **150** may be retained within housing **100** using a suitable adhesive, for example. In still other embodiments, booster material **150** may be retained within housing **100** by at least partially covering or enclosing output end **110** of housing **100**.

Priming assembly **10** may be at least partially pre-assembled before supplying priming assembly **10** to a user. For example, as shown in FIG. **4**, transmission lines **40***a*-**40***j* may be inserted into receptacles **140***a*-**140***j* of housing **100** before supplying priming assembly **10** to the user. Also, housing **100** may be packed with booster material **150** before supplying priming assembly **10** to the user. After inserting transmission lines **40***a*-**40***j* and/or booster material **150** into housing **100**, first and second portions **102**, **104**, of housing **100** may be coupled together, such as with a suitable adhesive **116**, to close housing **100**. In this way, the user may only need to insert detonators **20***a*, **20***b*, into housing **100** and couple transmission lines **40***a*-**40***j* to explosives **60**, as shown in FIG. **1**. It is also within the scope of the present disclosure that booster material **150** may be inserted into housing **100** along with or after detonators **20***a*, **20***b*.

While this invention has been described as having preferred designs, the present invention can be further modified within the spirit and scope of this disclosure. This application is therefore intended to cover any variations, uses, or adaptations of the invention using its general principles. Further, this application is intended to cover such departures from the present disclosure as come within known or customary practice in the art to which this invention pertains and which fall within the limits of the appended claims.

What is claimed is:

1. A priming assembly for coupling a plurality of detonators to at least one explosive through a plurality of transmission lines, the priming assembly comprising:

a housing having an outer wall, the housing extending along a longitudinal axis from a first end to a second end, the housing defining:

a plurality of detonator receptacles that are configured to receive the plurality of detonators; and

a plurality of transmission line receptacles that are configured to receive the plurality of transmission lines, each of the plurality of transmission line receptacles being semi-circular in shape to retain the plurality of transmission lines and to position the plurality of transmission lines relative to the plurality of detonators in the plurality of detonator receptacles while exposing the plurality of transmission lines to the plurality of detonators in the plurality of detonator receptacles such that an explosive charge from at least one of the plurality of detonators is communicated to the plurality of transmission lines and to the at least one explosive.

2. The priming assembly of claim **1**, wherein the explosive charge from the at least one detonator is communicated simultaneously to the plurality of transmission lines.

3. The priming assembly of claim **1**, wherein each of the plurality of detonator receptacles extends parallel to the longitudinal axis of the housing.

4. The priming assembly of claim **1**, wherein each of the plurality of transmission line receptacles extends parallel to the longitudinal axis of the housing.

5. The priming assembly of claim **1**, wherein the plurality of detonator receptacles extend parallel to the plurality of transmission line receptacles.

6. The priming assembly of claim **1**, wherein the plurality of transmission line receptacles surround the plurality of detonator receptacles.

7. The priming assembly of claim **1**, wherein the plurality of transmission line receptacles surround more than 180 degrees and less than 360 degrees of each transmission line.

8. The priming assembly of claim **1**, wherein the first end of the housing defines the plurality of detonator receptacles and the second end of the housing defines the plurality of transmission line receptacles.

9. The priming assembly of claim **1**, wherein the plurality of transmission line receptacles and the plurality of detonator receptacles are aligned along a plane that extends perpendicular to the longitudinal axis of the housing.

10. The priming assembly of claim **1**, wherein the number of transmission line receptacles in the housing exceeds the number of detonator receptacles in the housing.

11. The priming assembly of claim **1**, further comprising a booster material within the housing that produces an explosive coupling effect between the plurality of transmission line receptacles and the plurality of detonator receptacles to communicate the explosive charge from the at least one detonator to the plurality of transmission lines.

12. The priming assembly of claim **1**, wherein the housing includes a first portion and a second portion distinct from the first portion, the first portion of the housing defining a recess and the second portion of the housing including a rim that is sized for receipt within the recess.

13. A priming assembly comprising:

a plurality of detonators, at least one of the plurality of detonators being configured to generate an explosive charge;

a plurality of transmission lines;

at least one explosive; and

a housing comprising:

a plurality of detonator receptacles that are sized to receive the plurality of detonators; and

a plurality of transmission line receptacles that are sized to receive the plurality of transmission lines, each of the plurality of transmission line receptacles being semi-circular in shape to retain the plurality of transmission lines and to position the plurality of transmission lines relative to the plurality of detonators in the plurality of detonator receptacles while exposing the plurality of transmission lines to the plurality of detonators in the plurality of detonator receptacles such that the explosive charge from the at least one detonator is communicated to the plurality of transmission lines and to the at least one explosive.

14. The priming assembly of claim **13**, wherein the plurality of transmission lines are nonelectric.

15. The priming assembly of claim **13**, wherein the plurality of detonators contain a more sensitive, primary explosive material and the at least one explosive contains a more stable, secondary explosive material.

16. The priming assembly of claim **13**, further comprising a booster material within the housing that produces an explosive coupling effect between the plurality of transmission line receptacles and the plurality of detonator receptacles to communicate the explosive charge from the at least one detonator to the plurality of transmission lines.

17. The priming assembly of claim **13**, further comprising a plurality of flexible fins that extend radially into the plurality of detonator receptacles of the housing.

18. The priming assembly of claim **13**, wherein the plurality of transmission lines include enlarged heads that prevent longitudinal removal of the plurality of transmission lines from the plurality of transmission line receptacles.

* * * * *