US007882784B2

(12) **United States Patent**
Scheid

(10) **Patent No.: US 7,882,784 B2**
(45) **Date of Patent: Feb. 8, 2011**

(54) **DEMOLITION CHARGE HAVING MULTI-PRIMED INITIATION SYSTEM**

(75) Inventor: **Eric Scheid**, Bloomington, IN (US)

(73) Assignee: **The United States of America as represented by the Secretary of the Navy**, Washington, DC (US)

(*) Notice: Subject to any disclaimer, the term of this patent is extended or adjusted under 35 U.S.C. 154(b) by 61 days.

(21) Appl. No.: **12/242,885**

(22) Filed: **Sep. 30, 2008**

(65) **Prior Publication Data**

US 2009/0071362 A1 Mar. 19, 2009

Related U.S. Application Data

(63) Continuation-in-part of application No. 11/506,270, filed on Aug. 14, 2006, now Pat. No. 7,472,652.

(51) **Int. Cl.**
F42B 3/00 (2006.01)

(52) **U.S. Cl.** **102/331**; 102/314; 102/322

(58) **Field of Classification Search** 102/331, 102/314, 320, 321, 322
See application file for complete search history.

(56) **References Cited**

U.S. PATENT DOCUMENTS

2,697,399	A	12/1954	McAdams	
2,706,949	A	4/1955	Kessenich	
3,507,218	A *	4/1970	Ballard et al.	102/331
3,658,006	A *	4/1972	Nistler et al.	102/307
3,831,522	A *	8/1974	Romney	102/318
3,955,504	A *	5/1976	Romney	102/331
4,334,476	A *	6/1982	Day et al.	102/275.7
4,425,849	A *	1/1984	Jorgenson	102/275.12
4,957,027	A	9/1990	Cherry	
5,282,423	A *	2/1994	Sikorski et al.	102/431
5,932,835	A *	8/1999	Woodall et al.	102/403
6,227,095	B1 *	5/2001	Woodall et al.	89/1.13
7,000,545	B2 *	2/2006	Sansolo	102/331
7,337,703	B2 *	3/2008	Sansolo	89/1.14
7,472,652	B1 *	1/2009	Scheid	102/331

* cited by examiner

Primary Examiner—James S Bergin
(74) *Attorney, Agent, or Firm*—Christopher A. Monsey

(57) **ABSTRACT**

A demolition charge system has a multi-primed initiation system with a rigid container defining an internal chamber. An initiation tube is supported within the internal chamber and is configured to receive a demolition initiator.

28 Claims, 6 Drawing Sheets

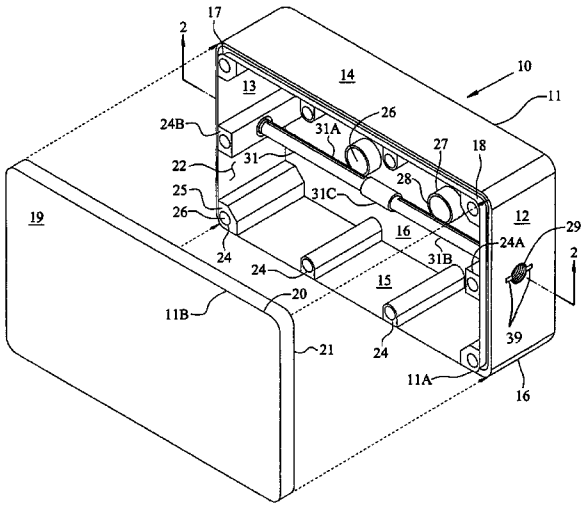

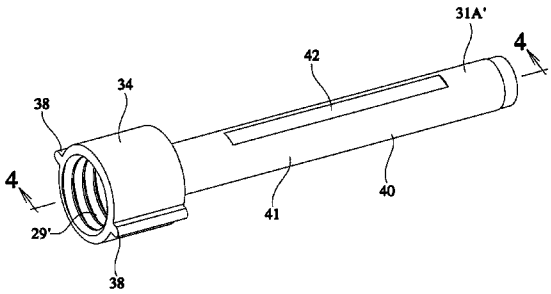

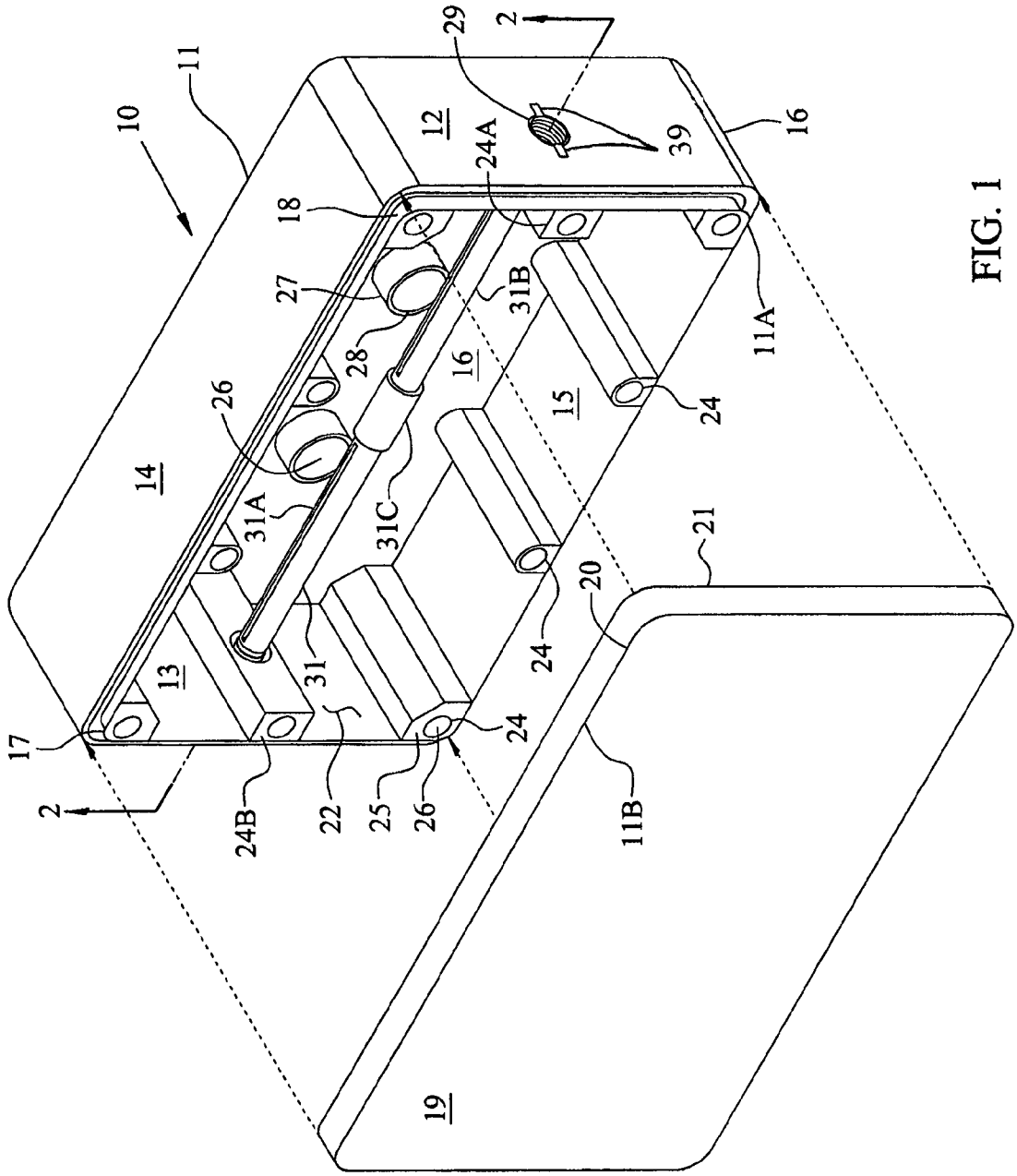
10
11
12
13
14
15
16
17
18
19
20
21
22
24
24A
24B
25
26
27
28
29
31
31A
31B
31C
39
11A
11B
2

FIG. 1

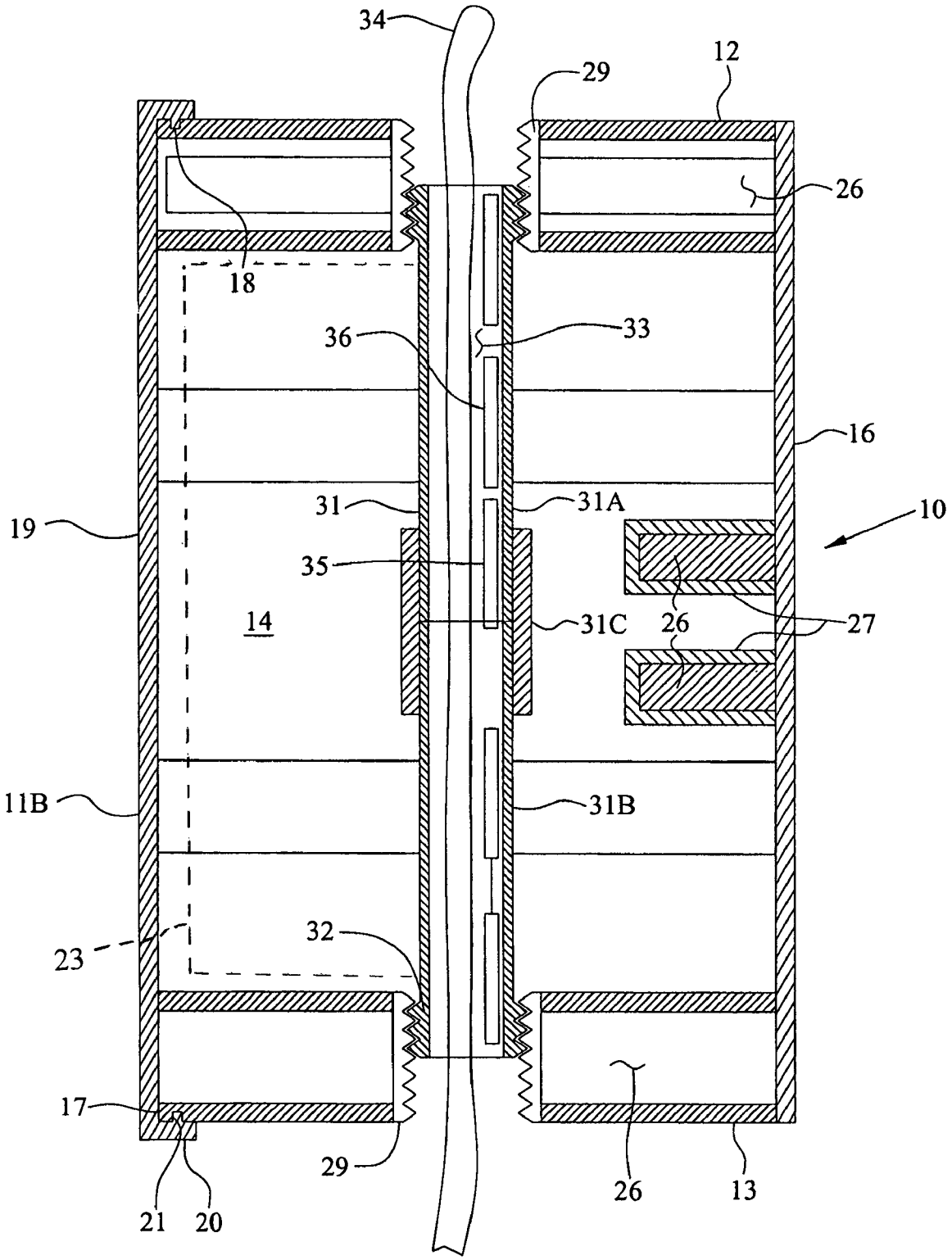
34
12
29
26
18
36
33
16
31
31A
10
19
35
14
31C
26
27
11B
31B
23
32
17
29
26
13
21
20

FIG. 2

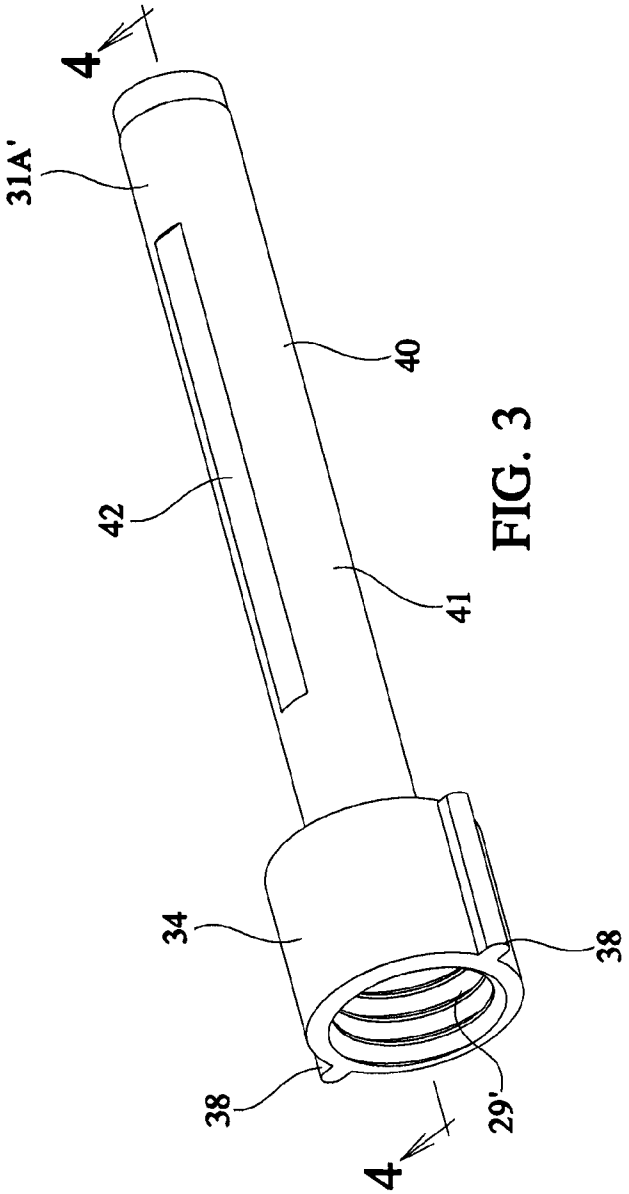

FIG. 3

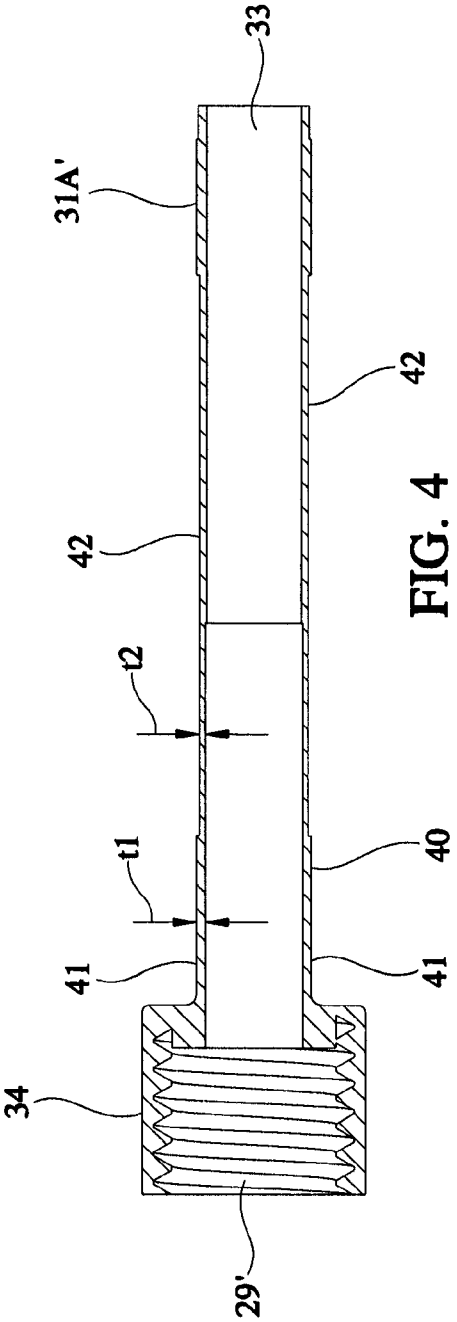

FIG. 4

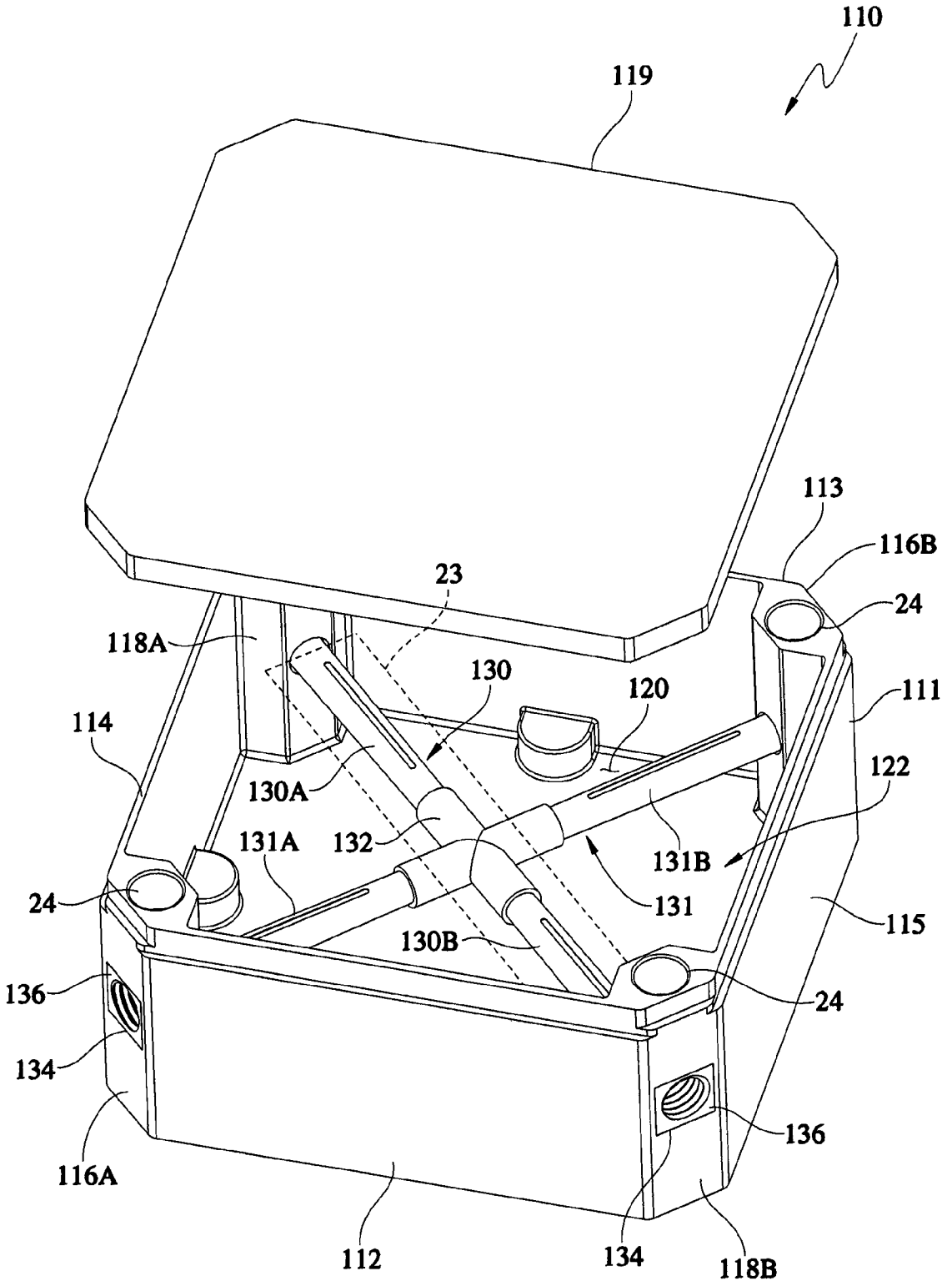
110
119
113
116B
23
24
118A
130
120
111
114
122
130A
131A
132
131B
131
24
115
130B
136
24
134
136
116A
112
134
118B

FIG. 5

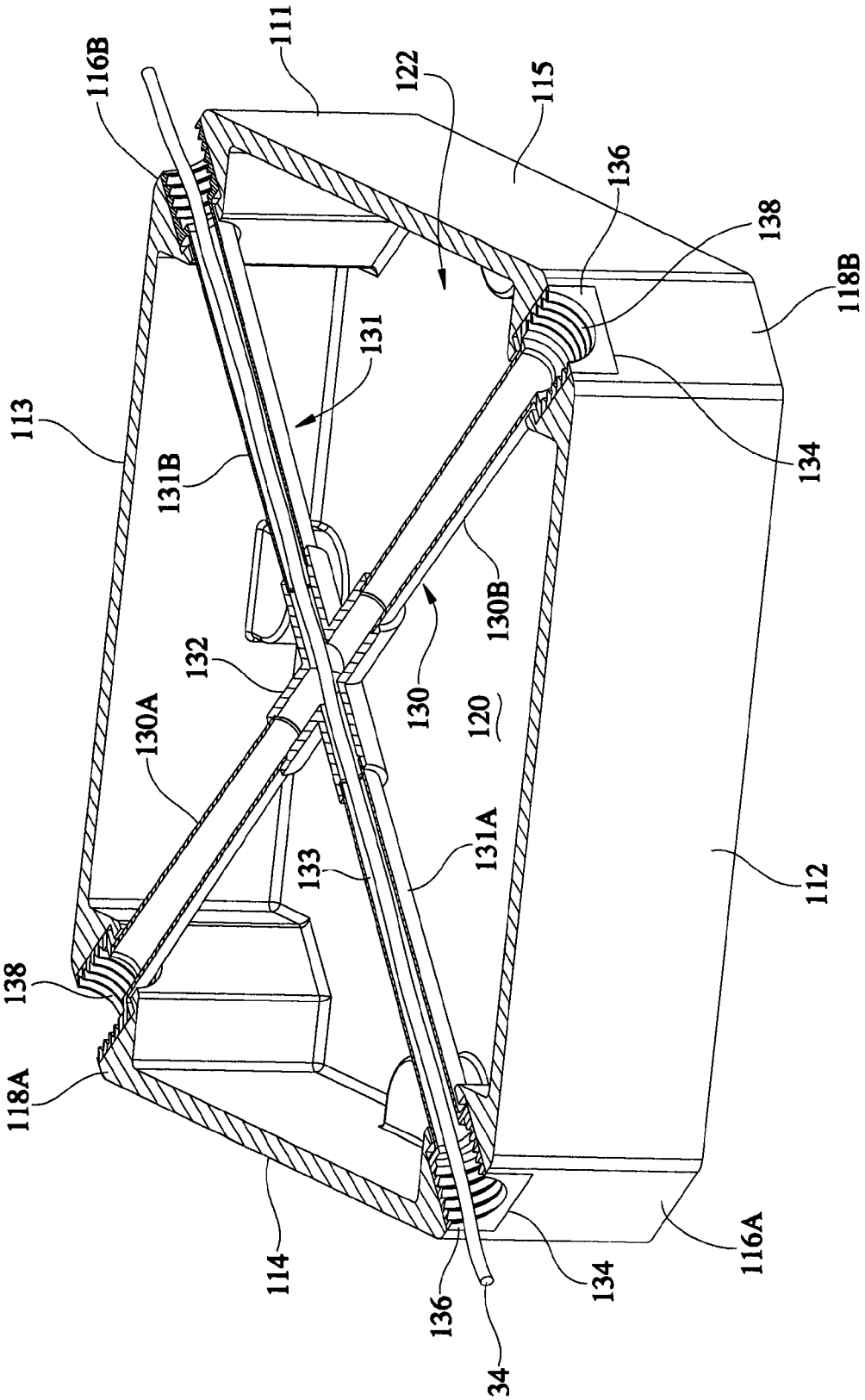
116B
111
122
115
136
138
118B
131
113
131B
134
130B
132
130
120
130A
131A
133
112
138
118A
114
136
34
134
116A

FIG. 6

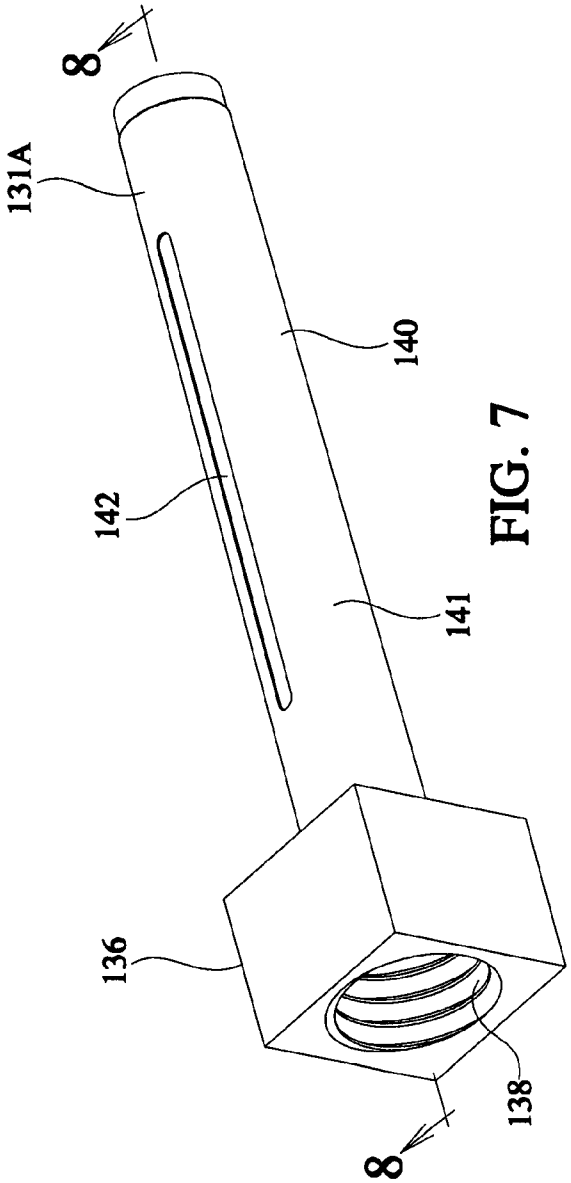
8
131A
140
142
141
136
138
8

FIG. 7

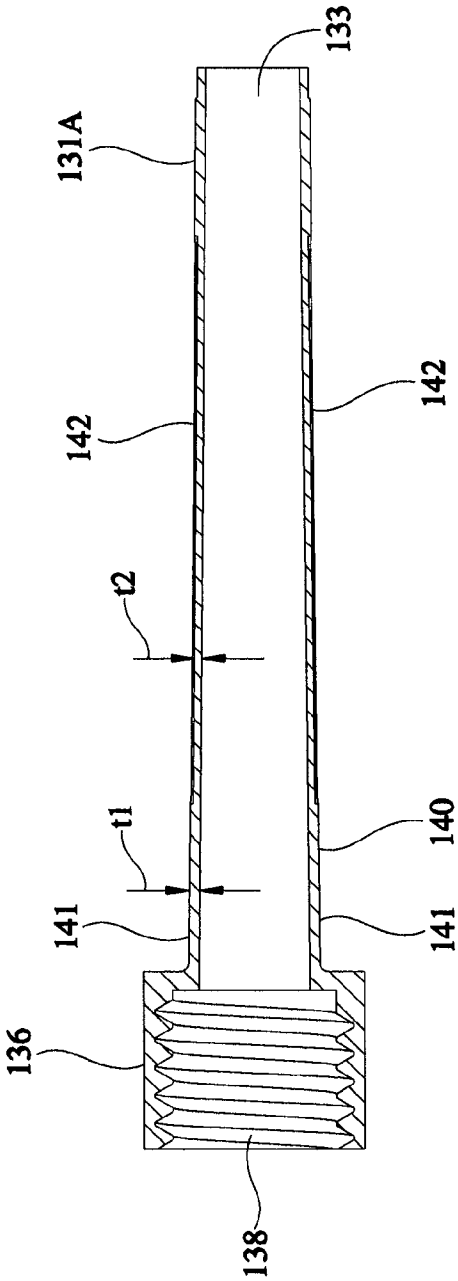
133
131A
142
142
t2
t1
140
141
141
136
138

FIG. 8

DEMOLITION CHARGE HAVING MULTI-PRIMED INITIATION SYSTEM

CROSS-REFERENCE TO RELATED APPLICATION

This application is a continuation-in-part of U.S. patent application Ser. No. 11/506,270, filed Aug. 14, 2006, and issued as U.S. Pat. No. 7,472,652 on Jan. 6, 2009, the disclosure of which is expressly incorporated by reference herein.

STATEMENT OF GOVERNMENT INTEREST

The invention described herein was made in the performance of official duties by an employee of the Department of the Navy and may be manufactured, used, licensed by or for the United States Government for any governmental purpose without payment of any royalties thereon.

BACKGROUND OF THE INVENTION

(1) Field of the Invention

The present invention relates to demolition charges and more particularly to demolition charges capable of being initiated by a variety of standard initiation systems or devices.

(2) Description of the Prior Art

Demolition packages containing explosives have long been used in the field to remove obstacles and accomplish a variety of other military purposes. Many of these demolition packages are hastily put together expedients; made under stressful conditions and, consequently, the packages may have sensitive components in the demolition train that detonate inadvertently or the packages simply may not have enough or the right kind of explosives to do what is needed. Consequently, the traditional bag-like "satchel charge" was developed to fill this need. The bag-like satchel charges are primarily canvas backpacks containing blocks of explosive linked by detonating cord. These charges are bulky (20 lbs) and are not easily primed or employed without some preparation by the user. The charges also do not have a multi-primed initiation system to assure reliable initiation. Additionally, because these charges can contain their own detonating cord and sensitive boosters, the charges are susceptible to accidental initiation. The traditional satchel charges can only be placed directly on or near a target and are not capable of being mounted by magnets, on a tripod or with other support apparatuses.

SUMMARY OF THE INVENTION

Accordingly, the present disclosure relates to a demolition charge capable of being reliably initiated by a variety of initiation systems or devices, and/or configurations thereof.

According to an illustrative embodiment of the present disclosure, a rigid container is provided having interconnected rigid thin end walls, side walls, a base wall and a lid. Illustratively, the lid continuously fits onto the end and side walls to cover and contain an internal chamber. Each of the ends walls has an opening longitudinally aligned with each other. An elongate hollow thin-walled plastic tube longitudinally extends through the internal chamber and couplers securely hold the tube in the container. At least one demolition initiator longitudinally would extend in the tube. In an alternate configuration and preferably used for smaller containers, two elongate hollow thin-walled tubes extending from corners of the container and integrating in the middle of the container may be used to contain the demolition initiators.

A main charge in the internal chamber is placed in close abutting intimate contact along the length of the tube(s) where the tube(s) extends through the chamber to assure demolition of the main charge. Illustratively, a continuous recessed strip portion having a continuous groove is provided to extend along a continuous rim of the end walls and the side walls.

In an illustrative embodiment, a continuous lip portion along the outer edge of the lid is shaped with an inwardly extending continuous rim. The lip portion and the inwardly extending continuous rim of the lid are sized to be fitted onto the strip portion and a continuous groove of the side and end walls with sufficient force to compress and override the continuous strip portion and fit the continuous rim into the continuous groove in a sealed interlocking engagement.

Threaded openings are illustratively supported by the end walls and have outer portions adapted to engage correspondingly shaped structure of a support structure to more advantageously locate the main charge with respect to a target. In an illustrative embodiment, elongate tubular receptacles are equidistantly spaced apart around the periphery of the internal chamber. Each of the elongate tubular receptacles has an elongate cavity extending between inner surfaces of the base and the lid to contain a magnet disposed in each cavity.

BRIEF DESCRIPTION OF THE DRAWINGS

Further objects and advantages of the present invention will become readily apparent upon reference to the following description of the preferred embodiments and to the accompanying drawings, wherein corresponding reference characters indicate corresponding parts in the drawings and wherein:

FIG. **1** depicts an isometric view of an illustrative rigid box-shaped charge container forming an internal chamber for containing a volume of explosives and having a lid of the container removed to depict a number of receptacles for magnets inside of and along the periphery of the explosive-filled chamber and a thin-walled initiation tube longitudinally extending through the chamber;

FIG. **2** depicts a cross-sectional view of the container and longitudinally extending thin-walled initiation tube, taken generally along reference lines **2-2** of FIG. **1** with the lid of the container and the container shown assembled, and with a detonating cord shown extending through opposing ends of the initiation tube;

FIG. **3** depicts a perspective view of an illustrative thin-walled initiation tube for use within the charge container of FIG. **1**;

FIG. **4** depicts a cross-sectional view of the initiation tube of FIG. **3**, taken generally along reference lines **4-4** of FIG. **3**;

FIG. **5** depicts a perspective view of a further illustrative box-shaped charge container forming an internal chamber for containing a volume of explosives and having a lid of the container removed to depict perpendicularly disposed thin-walled initiation tubes extending through the internal chamber;

FIG. **6** depicts a perspective view similar to FIG. **5** in cross-section taken along a common center plane of the thin-walled initiation tubes, with a detonating cord shown extending through opposing ends of an initiation tube;

FIG. **7** depicts a perspective view of an illustrative thin-walled initiation tube for use within the charge container of FIG. **5**; and

FIG. **8** depicts a cross-sectional view of the initiation tube of FIG. **5**, taken generally along reference lines **8-8** of FIG. **7**.

DESCRIPTION OF THE PREFERRED EMBODIMENT

Referring now to FIG. **1** and FIG. **2**, an improved demolition charge system **10** of the present disclosure has a box-like container **11** made from a plastic material or other cost-effective material that creates a rigid structure suitable to house explosives, is relatively non-corrosive. Wood may be selected as well as most metals provided that they are properly treated to be sealed and resistant to the corrosive influences of the operating environment. The container **11** can be molded or extruded as an integral watertight rigid structure from the plastic material to have interconnected and relatively light-weight thin end walls **12** and **13**, side walls **14** and **15**, and base wall or base **16** of sufficient toughness and crush resistance to be serviceable for field operations. In one illustrative embodiment, the container **11** is formed of a thermoplastic, such as acrylonitrile butadiene styrene (ABS), wherein the walls **12**, **13**, **14**, **15**, and **16** are each approximately 0.150 inches thick for protecting explosives received within the container **11**. Such a material was illustratively selected for its non-fragmentation, light weight, and low cost.

A continuous recessed strip portion **17** having a continuous groove **18** extends along a continuous rim **11**A of the end walls **12** and **13** and the side walls **14** and **15**.

A flat top wall, or lid **19** of the container **11** has a continuous lip portion **20** along an outer edge **11**B that is shaped with an inwardly extending continuous rim **21**. The lip portion **20** and the rim **21** are sized to be fitted onto the strip portion **17** and the continuous groove **18** with sufficient force to compress and override the strip portion **17** and to fit the continuous rim **21** into the groove **18** in a sealed and interlocking engagement. In other words, the rim **21** has sufficient resiliency and exerts sufficient inward bias to accommodate and ride-over the lip portion **20** and then snap into the groove **18** as the lid **19** is fitted onto the side walls **12**, **13** and the end walls **14**, **15**. The container **11** having the lid **19** in place on the side walls **12**, **13** and the-end walls **14**, **15** and the base **16**, covers and forms an internal chamber **22** that may contain, and is illustratively filled with an explosive main charge **23** (FIG. **2**). Illustratively, the lid **19** is sealingly secured to the side walls **12**, **13** and the end walls **14**, **15** through conventional means, such as a glue adhesive By sealing the lid **19** to the walls **12**, **13**, **14**, **15**, users are not exposed to loose explosive materials, which are generally considered mild toxins and may cause a hazard if inadvertently detonated.

Since different explosives create different explosive effects, the constituency of main charge **23** can be suited to the task to be performed and the explosives available. Mixes of different explosives might be desirable or a smaller main charge **23** in the chamber **22** may be needed. In this case, the required amount of the selected explosives can be measured out and placed in the chamber **22**, or if more is needed for a task, additional ones of the demolition charge system **10** can be stacked and simultaneously detonated. In either case, reliable demolition is assured because of the initiation of the present disclosure to be discussed further below.

In one illustrative embodiment, the chamber **22** of container **11** is configured to received approximately 10 pounds of explosive defining main charge **23**. Illustratively, the main charge **23** may comprise a plastic explosive, such as composition C-4. Other explosives, including plastic bonded explosives (PBXs) may also be used, such as PAX-47, PBXN 109 or modifications thereof including a variety of fills. The main charge **23** may be received within a conductive container, such as a foil bag, particularly when a non-conductive container **11** is utilized in order to reduce undesirable electrostatic discharge (ESD).

The container **11** of the demolition charge system **10** has a number of elongate tubular receptacles **24** equi-distantly spaced apart around the periphery of the chamber **22**. The receptacles **24** can be integrally formed with the end walls **12** and **13**, the side walls **14** and **15**, and the base **16**. The receptacles **24** each have an elongate hollow cylindrical-shaped cavity **25** that extends between the inside surfaces of the base **16** and the lid when the lid **19** is secured on the recessed strip portion **17**.

A magnet **26** is placed in each elongated cavity **25** shorter receptacles **27** having magnets **26** in their shorter cylindrical cavities **28** can be located on the base **16** along the centerline to further assure magnetic securing of the demolition charge system **10** on an iron-based surface. All of the magnets **26** can magnetically hold the demolition charge system **10** on and against a steel, iron, or other ferrous target. The magnets **26** also allow for the quick attachment of a fragmentation plate accessory (not shown) whether or not the magnets engage or not engage a target.

Optionally, one or more of the receptacles **24** and **27** can have the magnets **26** removed in order to reduce the overall weight of the demolition charge system **10**. This option is more attractive when there is no need to anchor the demolition charge system **10** on ferrous targets.

The end walls **12** and **13** are illustratively provided with threaded fittings **29** having openings or apertures longitudinally aligned with each other and also extending through adjacent receptacles **24**A and **24**B. An elongate, hollow, thin-walled plastic initiation tube **31** extends through the chamber **22** approximate to the longitudinal centerline of the container **11** and through the center of the chamber **22** and where the main charge **23** would be positioned. In one illustrative embodiment, the initiation tube **31** is formed of a thermoplastic, such as acrylonitrile butadiene styrene (ABS).

The initiation tube **31** supports couplers, such as threaded ends engaging inner portions of the threaded fittings **29** to securely hold the tube **31** in the container **11**. In an alternative embodiment shown in FIGS. **3** and **4**, the coupler supported by each end of the tube **31'** may include an enlarged head **34** having a pair of diametrically opposed keys **38**. The keys **38** may be received within cooperating keyways **39** formed within walls **12** and **13** (FIG. **1**).

The initiation tube **31** may be a single piece, but optionally the tube may have aligned portions **31**A and **31**B joined by a coupling sleeve **31**C. The aligned portions **31**A and **31**B and coupling sleeve **31**C may be useful to aid mounting of tube **31** in the container **11**. The number of aligned portions **31**A, **31**B and coupling sleeves **31**C forming the initiation tube **31** may vary based upon the dimensions of the container **11** and the required structural support required for the tube **31** to extend across the internal chamber **22**. As further detailed herein in connection with FIGS. **5-8**, in an alternate configuration and illustratively for use with smaller containers (five pounds of explosive main charge **23** vs. ten pounds of explosive main charge **23**), two elongate hollow thin-walled initiation tubes may extend from the corners of the container and integrate in the middle of the container for containing demolition initiators. The configuration of the initiation tubes is similar to a cross when viewed from the top of the box and centralized within the volume of the container.

Irrespective of the exact configuration of the initiation tube **31**, the tube **31** has a relatively large longitudinally extending internal duct **33** configured to receive a number of the demolition initiators for priming of the main charge. The demoli-

tion initiators can be individual ones of or can include combinations of: (1) a detonating cord **34** of fifty grains per foot size (i.e., fifty grams of explosive per foot of length), and/or (2) blasting caps **35** that may be connected to appropriate cap-initiating means such as, electrically conductive wires or a standard igniting fuse and/or (3) other standard military initiation devices **36** such as time-actuated, chemically-actuated, and/or remote radio signal-actuated detonators. These multi-primed combinations of demolition means increase the safety of operation by introducing redundancy and can create higher or more intense shock waves to further guarantee reliable demolition of the main charge.

Detonating cords **34** are known in the art as including a thin flexible tube receiving an explosive core. Detonating cords **34** provide flexibility, particularly during field installation within the initiation tubes **31**. As shown in FIG. **2**, the detonating cord **34** may extend longitudinally through the duct **33** and beyond opposing open ends of the tube **31**, which are concentrically received within the openings **29** of opposing walls **12** and **13**, in order to facilitate field assembly and the stringing together of multiple demolition charge systems **10**.

The thin-walled initiation tube **31** can be sized (e.g. having a inner diameter of approximately 0.275 inches) to have one or more of the detonating cords **34**, blasting caps **35**, and the other standard detonators **36** quickly installed by the user to reliably initiate the main charge **23** in the chamber **22**. The main charge **23** would be positioned in the chamber **22** in close-abutting and intimate contact along the length of the initiation tube **31** where the tube extends through the chamber **22** in order to assure demolition of the main charge **23**. Reliable initiation is further enhanced because of the design of the initiation tube **31** extending through the main charge **23** in the chamber **22** and the use, if necessary, of a thin-walled cylinder booster charge. The booster charge would be wrapped around the hollow initiation tube **31**.

Given the relatively weak explosive energy generated by typical detonating cords **34**, the initiation tube **31** is thin-walled. More particularly, the portions **31**A and **31**B of tube **31** each include a tube wall **40** including at least a portion of which is thin enough to permit the explosive force from the detonating cord **34** to transmit sufficient energy to the main charge **23** to cause detonation thereof. In other words, the detonation of the detonating cord **34** has to provide enough shock through the plastic tube **31** and into to the explosive main charge **23** to cause the explosive main charge to react in various ways that cause it to detonate. Shock implies the existence of a shock front—a physical discontinuity in thermodynamic values. A shock front or wave is generally known as a type of propagating disturbance that carries energy and can propagate through a medium (solid, liquid or gas).

With reference to FIGS. **3** and **4**, an illustrative embodiment portion **31**A' of an initiation tube **31'** is shown as including a side or tube wall **40** having a first portion **41** with a first wall thickness t**1**. A second portion of the tube wall **40**, in the form of slots **42**, has a second wall thickness t**2**. The slots **42** are diametrically opposed and extend axially along a majority of the length of the tube wall **40**. The second wall thickness is illustratively less than 0.050 inches. While a thickness t**2** of 0.030 inches provides improved detonation reliability, the illustrative embodiment slot **42** has a thickness t**2** of about 0.020 inches (+/−0.003 inches tolerance) for event greater detonation reliability. In order to provide adequate structural support for the initiation tube **31'**, the first portion **41** illustratively has a wall thickness t**1** of about 0.030 inches (+/−0.0003 inches tolerance). In summary, the dimensions and material of the tube wall **40** are illustratively designed based upon detonation properties of the detonating cord **34** and the main charge **23**, wherein the tube wall **40** will permit the detonating cord **34** and the main charge **23** to function while being relatively insensitive to accidental detonation, reduce the risk of misfire or partial detonation due to failure to transmit sufficient energy or shock through the tube wall **40**, obtain a uniform and predictable detonation of the main charge **23**, and be stable enough to endure rough handling or impacts transmitted to the main charge **23** and to the detonating cord **34** placed within the tube **31** without accidental detonation or damage to the tube **31**.

Use of a mounting tripod (not shown) or other mounting support apparatus for raising the demolition charge system **10** above the ground and specifically locating the system in close proximity next to a building or other above-ground target might be required to increase the effectiveness of the demolition charge system. The demolition charge system **10** of the present disclosure can be appropriately located for such applications since outer portions of the threaded fittings **29** that are not engaged by threaded ends **32** of the hollow initiation tube **31** can be used to receive a projection or correspondingly threaded mounting stud (not shown) of a mounting tripod or other support apparatus. In other words, the outer portions of the threaded fittings **29** are adapted to engage a correspondingly shaped structure of different support structures to more advantageously locate the main charge with respect to an intended target. Accordingly, the demolition charge system **10** of the disclosure can be used with a greater degree of effectiveness.

The demolition charge system **10** of the present disclosure is a needed improvement over the explosive expedients of the prior art. The amount and constituency of the main charge can be quickly tailored in the field if need be, or an appropriate number of demolition charge systems **10** can be quickly made beforehand for a demolition task. Since a particular size for the demolition charge system **10** can be "standardized" (at say about ten pounds, for example), a considerable inventory can be pre-made and personnel can be trained in their proper use. The container **11** can be made in a variety of different shapes instead of the box-like configuration referred to above so long as it encloses a chamber containing the correct amount of explosives.

The demolition charge system **10** can be primed with one or more of the detonating cords **34** so that the required number of demolition charge systems can be "strung" on the same line of the detonating cord **34** and initiated at the same time. Without the longitudinally extending thin-walled initiation tube **31** of each demolition charge system **10** containing the common "strung-through" detonating cord **34**, each charge would otherwise need an individual detonator. Since detonators and handling detonators are known to be the most dangerous parts of a demolition system, the claimed demolition charge systems **10** having a common detonating cord **34** reduce or eliminate the need for multiple separate detonators and decrease the risks and hazards to users.

Since the demolition charge system **10** can be loaded with a variety of explosives, the main charge **23** can be tailored for the job and use the materials at hand. The selected main charge **23** may contain a booster that is less sensitive (safer) than previous charges, yet the main charge **23** is sensitive enough to be initiated via the detonating cord **34** coextending in the longitudinally extending initiation tube **31**.

As a further safety feature of the demolition charge system **10** of the disclosure, the system need not be shipped or stored with the detonating cord **34** built in order to make the system safer and less likely to detonate accidentally. Instead, the detonating cord **34** can be quickly inserted through the duct

33 of the initiator tube 31 of each demolition charge systems 10 just prior to demolition in the field.

Threaded openings 29 create a pair of ports on opposite ends of demolition charge system 10. Accordingly, each demolition charge system 10 can be simultaneously mated to one or more detonators (detonating cord, blasting caps etc.) and onto a tripod or other mating projection on another support apparatus. The gives the user many options in the way the charge is used and makes using the charge easier than conventional designs. Optionally, cables could be strung through openings to provide for support and/or be used to slide or pull appropriate demolition initiators into the initiation tube 31 for immediate or later demolition.

FIGS. 5-8 show a further illustrative embodiment demolition charge system 110, providing similar advantages to those listed above with respect to demolition charge system 10, but in a smaller package. As noted above, the demolition charge system 10 is configured to receive a main charge of about 10 pounds of explosives, while the demolition charge system 110 is configured to receive a main charge of about 5 pounds of explosives.

The demolition charge system 110 illustratively includes a container 111 opposing side walls 112 and 113, and opposing side walls 114 and 115. The walls 112, 113, 114, and 115 are connected by corners 116A, 116B, 118A, and 118B and a base 120. As with container 11 detailed above, container 111 is formed of a thermoplastic, such as acrylonitrile butadiene styrene (ABS).

A flat top wall, or removable lid 119 of the container 11 cooperates with the walls 112, 113, 114, and 115. The container 111 having the lid 119 in place on the walls 112, 113, 114, and 115 and the base 120, covers and forms an internal chamber 122 that may contain, and preferable is filled with an explosive main charge 23 (FIG. 5).

The container 111 of the demolition charge system 110 has a number of elongate tubular receptacles 24 positioned proximate the corners 116A, 116B, 118A, and 118B of the chamber 122. As detailed above in connection with the demolition charge system 10, magnets 26 may be placed in receptacles 24. The magnets 26 are configured to magnetically hold the demolition charge system 110 on and against a steel, iron, or other ferrous target. The magnets 26 also allow for the quick attachment of a fragmentation plate accessory (not shown).

First and second initiation tubes 130 and 131 extend within the internal chamber 122 of container 111. As with initiation tube 31 detailed above, each initiation tube 130 and 131 illustratively comprises at least one elongated hollow tube configured to receive at least one demolition initiator, such as detonating cord 34. In one illustrative embodiment, the initiation tubes 130 and 131 may be formed of a thermoplastic, such as acrylonitrile butadiene styrene (ABS). While a pair of initiation tubes 130 and 131 are illustrated in FIGS. 5 and 6 for providing operational flexibility, typically only one of the initiation tubes 130, 131 will receive demolition initiator(s).

The first initiation tube 130 extends substantially perpendicular to the second initiation tube 131. The first initiation tube 130 is coupled to the second initiation tube 131 by a cross-shaped coupling member 132 supported proximate the center of the internal chamber 122. The initiation tubes 130 and 131 support couplers, such as enlarged heads in the form of blocks 136 supported by each opposing end of the tubes 130 and 131. The blocks 136 are illustratively received within cooperating openings 134 formed within corners 116A, 116B, 118A, and 118B to securely hold the tubes 130 and 131 in the container 111. Internal threads 138 are illustratively formed within each block 136 to couple, for example, to a mounting support apparatus. In alternative embodiments, other couplers may be used to secure tubes 130 and 131 within container 111. For example, the opposing ends of tubes 130 and 131 may include external threads engaging threaded fittings supported by the corners 116A, 116B, 118A, and 118B to securely hold the tubes 130 and 131 in the container 111.

Each initiation tube 130 and 131 is illustratively formed of aligned portions 130A, 130B and 131A, 131B, respectively, and joined together by the coupling member 132. The aligned portions 130A, 130B and 131A, 131B and coupling member 132 may be useful to aid mounting of tubes 130 and 131 in the container 111 and to provide structural support to the thin walled tubes 130 and 131. The number of aligned portions 130A, 130B and 131A, 131B the initiation tubes 130 and 131 may vary based upon the dimensions of the container 111 and the required structural support required for the tubes 130 and 131 to extend across the internal chamber 122.

Irrespective of the exact configuration of the initiation tubes 130 and 131, each tube 130 and 131 has a relatively large longitudinally extending internal duct 133 (e.g. having a inner diameter of approximately 0.275 inches) configured to receive a number of the demolition initiators for priming of the main charge. As detailed above, the demolition initiators can be individual ones of or can include combinations of detonating cords 34, blasting caps, and other standard detonators quickly installed by the user to reliably initiate the main charge 23 in the chamber 122. The main charge 23 is positioned in the chamber 122 is in close-abutting and intimate contact along the length of the respective initiation tube 130 and 131 where the tube 130, 131 extends through the chamber 122 in order to assure demolition of the main charge 23.

As shown in FIG. 6, the detonating cord 34 may extend longitudinally through the duct 133 of either or both initiation tubes 130, 131. The detonating cord 34 extends beyond opposing open ends of the respective tube 130, 131, which are concentrically received within the openings 134 of opposing corners 116A, 116B, 118A, 118B, in order to facilitate field assembly and the stringing together of multiple demolition charge systems 110.

As with initiation tube 31, due to the relatively weak explosive energy of the detonating cord 34, the initiation tubes 130, 131 are thin-walled. In FIGS. 7 and 8, portion 131A of tube 131 is illustrated. It should be noted that portions 130A, 130B, and 131 B are substantially identical to portion 131A. Portion 131A of tube 131 includes a tube wall 140 including at least a portion of which is thin enough to permit the explosive force from the detonating cord 34 to transmit sufficient energy to the main charge 23 to cause detonation thereof. More particularly, tube wall 140 includes a first portion 141 with a first wall thickness t1, and a second portion, in the form of slots 142, with a second wall thickness t2. The slots 142 are diametrically opposed and extending axially along a majority of the length of the tube wall 140. The second wall thickness t2 is illustratively less than 0.050 inches. While a thickness t2 of 0.030 inches provides improved detonation reliability, the illustrative embodiment slot 42 has a thickness t2 of about 0.020 inches (+/−0.003 inches tolerance) for event greater detonation reliability. In order to provide adequate structural support for the tube 131, the first portion 141 illustratively has a wall thickness t1 of about 0.030 inches (+/−0.0003 inches tolerance).

While the present invention has been described in connection with the preferred embodiments of the various figures, it is to be understood that other similar embodiments may be used or modifications and additions may be made to the described embodiment for performing the same function of the present invention without deviating therefrom. Therefore, the present invention should not be limited to any single embodiment, but rather construed in breadth and scope in accordance with the recitation of the appended claims.

What is claimed is:

1. A demolition charge system comprising:

a container having opposing walls, a base coupled to said walls, and a lid, said lid fitting onto said walls to cover an internal chamber defined between said walls and said base; and

an elongated hollow tube extending within said internal chamber, said tube having a tube wall extending between opposing open ends, the opposing open ends being supported by said opposing walls;

wherein said elongated hollow tube is adapted to receive a detonating initiator extending longitudinally within said tube, and said internal chamber of said container is adapted to receive a main charge such that said tube extends in proximity to said main charge for causing detonation of said main charge upon activation of said detonating cord;

wherein said hollow tube wall comprises a first portion having a first thickness and a second portion having a second thickness, wherein said second portion is formed into a recessed area set into a wall of said first portion having side areas and a floor area, said floor area has a first and second side, said first side is within said recessed area and said second side faces into an inner section of said elongated hollow tube, wherein said floor area dimensions are determined based on detonating energy produced by said detonating initiator, material properties of said elongated hollow tube material which absorb said detonating energy, and a threshold energy value from said detonating initiator required to detonate said main charge.

2. The demolition charge system of claim 1, wherein said opposing walls include longitudinally aligned apertures, and each of opposing ends of said elongated hollow tube are open and received within one of said apertures of said opposing walls such that said detonating cord is capable of extending through both said opposing ends of said tube.

3. The demolition charge system of claim 1, wherein said detonating cord includes approximately 50 grains of explosive per foot of length.

4. The demolition charge system of claim 1, wherein said main charge comprises about 10 pounds of explosive.

5. The demolition charge system of claim 1, wherein said wall thickness is less than 0.030 inches.

6. The demolition charge system of claim 5, wherein said wall thickness is about 0.020 inches.

7. The demolition charge system of claim 1, wherein said container is formed of a thermoplastic.

8. The demolition charge system of claim 1, wherein said elongated hollow tube is formed of thermoplastic.

9. The demolition charge system of claim 8, wherein said elongated hollow tube is formed of acrylonitrile butadine styrene.

10. The demolition charge system of claim 1, further comprising a pair of couplers, each of said couplers supported by one of said opposing walls and engaging one of opposing ends of said elongated hollow tube such that said tube is supported within said internal chamber between said opposing walls of said container.

11. The demolition charge system of claim 10, wherein each of said couplers comprises a key supported by one of said opposing ends of said elongated hollow tube and received within a keyway formed within one of said opposing walls of said container.

12. The system of claim 1 further comprising:

a plurality of elongated tubular receptacles positioned around the periphery of said internal chamber, each of said tubular receptacles having an elongated cavity; and

a magnet disposed in each of said elongate cavities.

13. The system as in claim 12, further comprising a fragmentation layer coupled to either said lid or said base, said fragmentation layer is adapted to be explosively fragmented upon detonation of said main charge.

14. The system as in claim 13, wherein said fragmentation layer is coupled to said lid or said base by means of at least one of said magnets.

15. The system of claim 1, wherein said container is formed as a substantially integral watertight rigid structure, wherein said hollow tube is formed to engage with said container in a substantially watertight coupling.

16. The system of claim 1, wherein said container further comprises a continuous recessed strip portion having a continuous groove extending along a continuous rim on an edge of said opposing walls, wherein said lid further comprises a continuous lip portion along an outer edge that is shaped with an inwardly extending continuous rim, wherein said lip portion and said rim are adapted to be fitted onto said recessed strip portion and said continuous groove with sufficient force to compress and override the strip portion and to fit said continuous rim into said groove in a sealed and interlocking engagement.

17. The system as in claim 1, wherein the opposing open ends being supported by said opposing walls, and said second thickness is less than 0.050 inches.

18. The system as in claim 1, wherein said recessed area is more than half a length of said hollow tube.

19. The system as in claim 1, wherein said first thickness is determined based on structural strength required to maintain structural integrity of said hollow tube in said container given said second thickness and said recessed area's reduction of structural strength for said hollow tube.

20. The system as in claim 1, wherein said container, said hollow tube, and said lid are made from a material which is substantially consumed in a detonation of said main charge.

21. The system as in claim 1, further comprising a third portion formed into a recessed area set into a different section of said wall from said second portion and having a third thickness, wherein said third portion is formed with another recessed area set into said outer wall of said first portion, wherein said third thickness is determined based upon a determination of energy required to be propagated by said detonating cord through said third portion into said main charge for detonation of said main charge.

22. The system as in claim 21, wherein said another recessed area is more than half a length of said hollow tube.

23. The system as in claim 21, wherein said third portion is formed substantially opposite of said second portion in said first portion of said hollow tube.

24. The system as in claim 21, wherein said third portion is formed in said first portion substantially on a side of said hollow tube perpendicular to said base.

25. The system as in claim 24, wherein said second and third portions are formed substantially opposite of each other in said first portion of opposing sides of said hollow tube that are substantially perpendicular to said base.

26. The system as in claim 1, wherein said second portion is formed in said first portion substantially on a side of said hollow tube perpendicular to said base.

27. The system as in claim 1, wherein said detonating initiator is a detonator cord.

28. The system as in claim 1, wherein said detonating initiator is a blasting cap.

* * * * *