US006895871B1

(12) **United States Patent**
Smith et al.

(10) **Patent No.: US 6,895,871 B1**
(45) **Date of Patent: May 24, 2005**

(54) **HAZARDOUS MATERIALS DECONTAMINATION PLATFORM**

(75) Inventors: **William G. Smith**, Martinsville, IN (US); **Roger D. Enochs**, Bloomington, IN (US)

(73) Assignee: **The United States of America as represented by the Secretary of the Navy**, Washington, DC (US)

(*) Notice: Subject to any disclaimer, the term of this patent is extended or adjusted under 35 U.S.C. 154(b) by 84 days.

(21) Appl. No.: **10/342,659**

(22) Filed: **Jan. 15, 2003**

(51) **Int. Cl.**[7] **A47B 3/00**
(52) **U.S. Cl.** **108/115**; 108/57.32; 108/57.14
(58) **Field of Search** 108/57.14, 57.32, 108/54.1, 56.1, 57.22, 57.31, 57.17, 51.11, 108/57.3, 131, 132, 129; 211/85, 126.6, 126.9, 211/132.1, 149, 195, 181.1, 153

(56) **References Cited**

U.S. PATENT DOCUMENTS

1,700,843	A *	2/1929	Hayward	108/56.1
1,918,003	A *	7/1933	Taylor et al.	108/56.1
2,204,446	A *	6/1940	Robinson	108/161
2,565,292	A *	8/1951	Arthur	105/375
4,244,768	A	1/1981	Wiechowski et al.	
4,297,953	A *	11/1981	Shy	108/131
4,501,402	A *	2/1985	Saito et al.	248/346.02
4,675,923	A	6/1987	Ashley	
4,838,178	A	6/1989	Chriske et al.	
4,858,256	A	8/1989	Shankman	
4,890,343	A	1/1990	Schlags	
4,934,396	A	6/1990	Vitta	
4,953,473	A *	9/1990	Tomaka et al.	108/132
5,020,667	A	6/1991	Bush	
5,562,047	A *	10/1996	Forney et al.	108/57.13
5,687,652	A	11/1997	Ruma	
5,802,986	A	9/1998	Lin	
5,906,165	A *	5/1999	McCorkle et al.	108/55.1
6,101,768	A	8/2000	Springstead et al.	
6,105,512	A	8/2000	Lin	
6,164,298	A	12/2000	Petter et al.	
6,382,108	B1 *	5/2002	Stanek et al.	108/55.1
6,561,107	B1 *	5/2003	Wood et al.	108/132

FOREIGN PATENT DOCUMENTS

FR	2557934	*	1/1984

* cited by examiner

Primary Examiner—Jose V. Chen
(74) *Attorney, Agent, or Firm*—Fredric Zimmerman

(57) **ABSTRACT**

A portable, re-usable, elevated platform that provides a large, non-slip, grated surface on which an individual wearing a fully-encapsulated, hazardous materials suit may stand, and turn as needed to ensure thorough on-site decontamination. The platform generally comprises a top grate and two folding/pivoting support leg assemblies. The elevated design of the platform allows for the collection of the hazardous material runoff in a containment vessel deployed underneath. The platform is fabricated of impervious, strong, lightweight materials to prevent absorption of any hazardous materials and to provide sufficient structural strength while keeping its overall weight reasonable. The design is simple and straightforward, and can be economically manufactured.

12 Claims, 5 Drawing Sheets

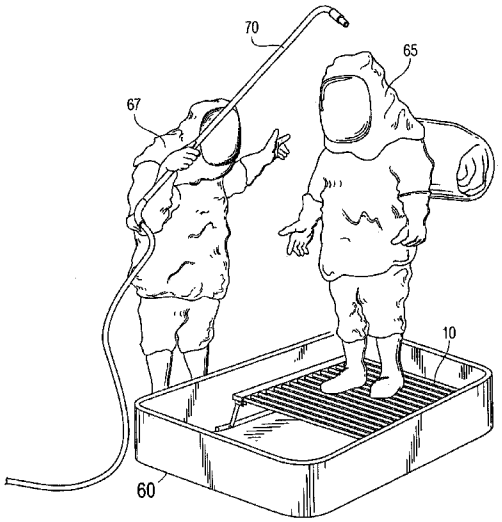

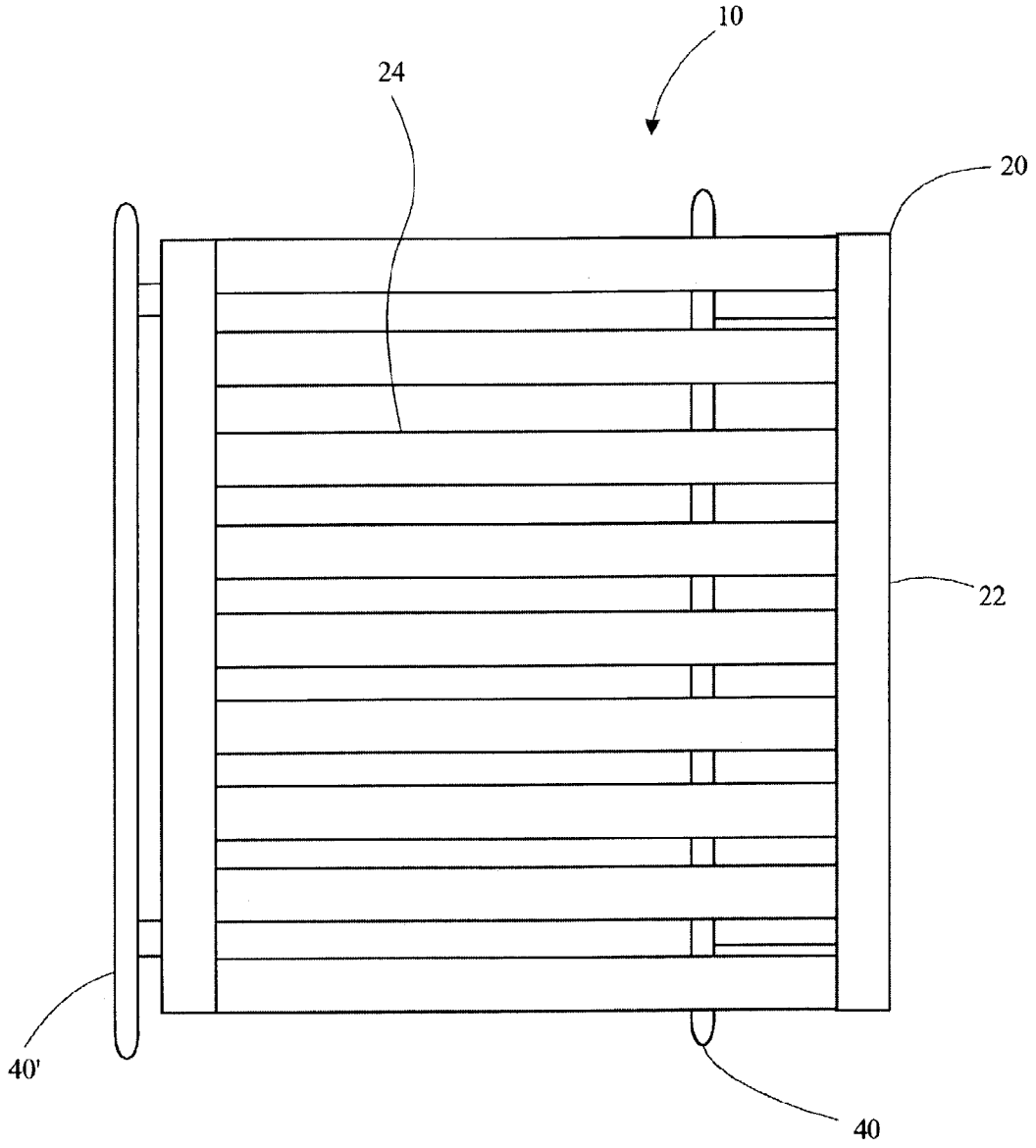

FIG. 1

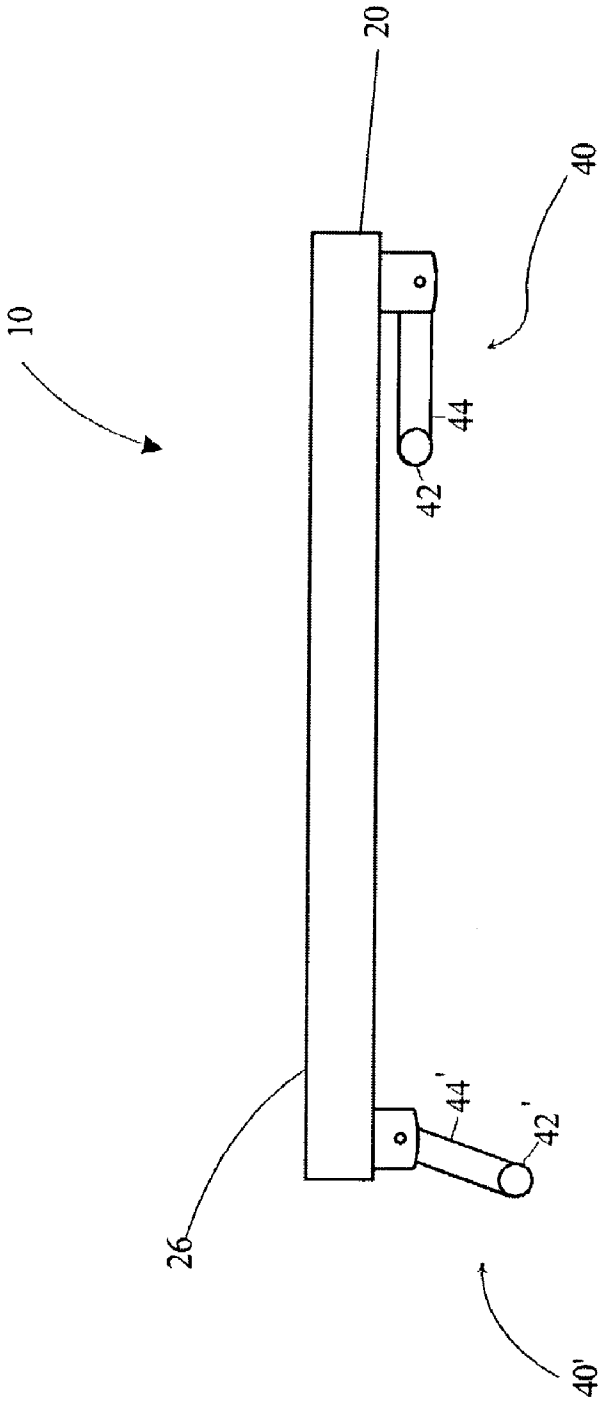

FIG. 2

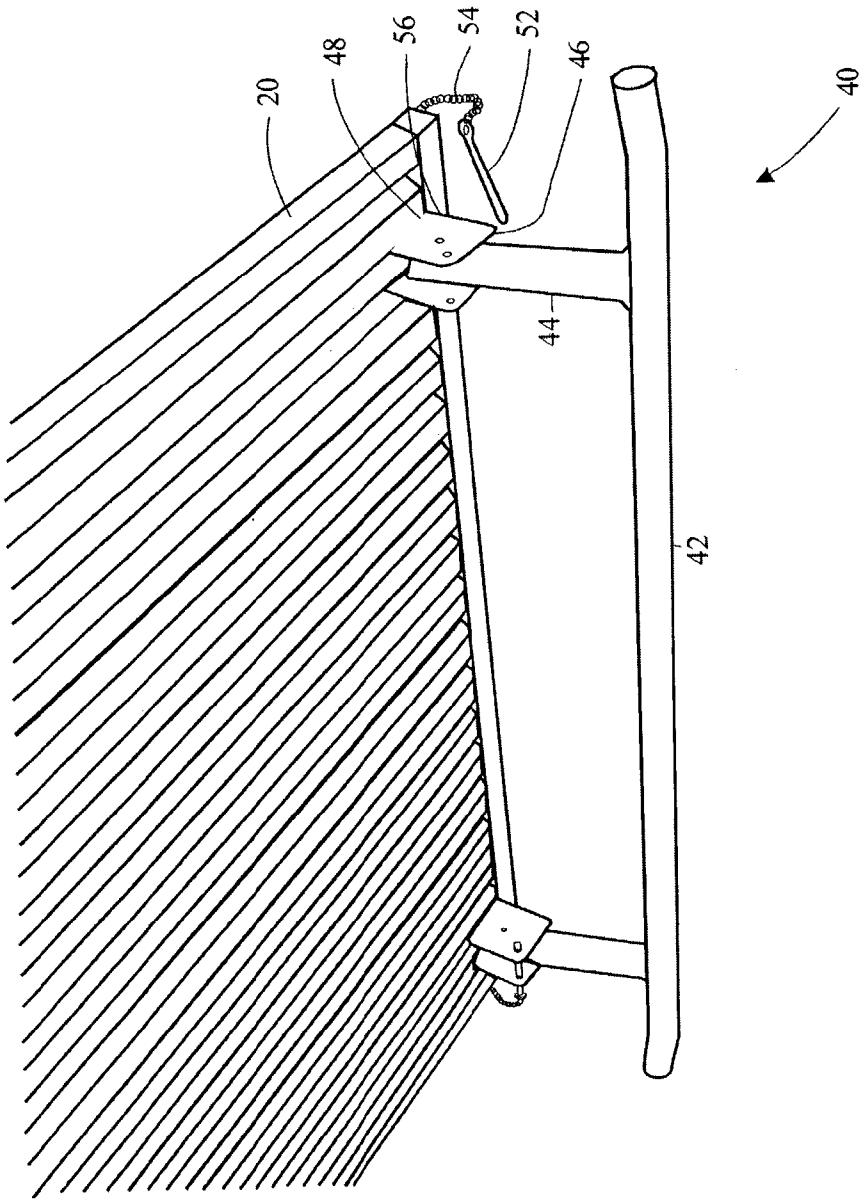

FIG. 3

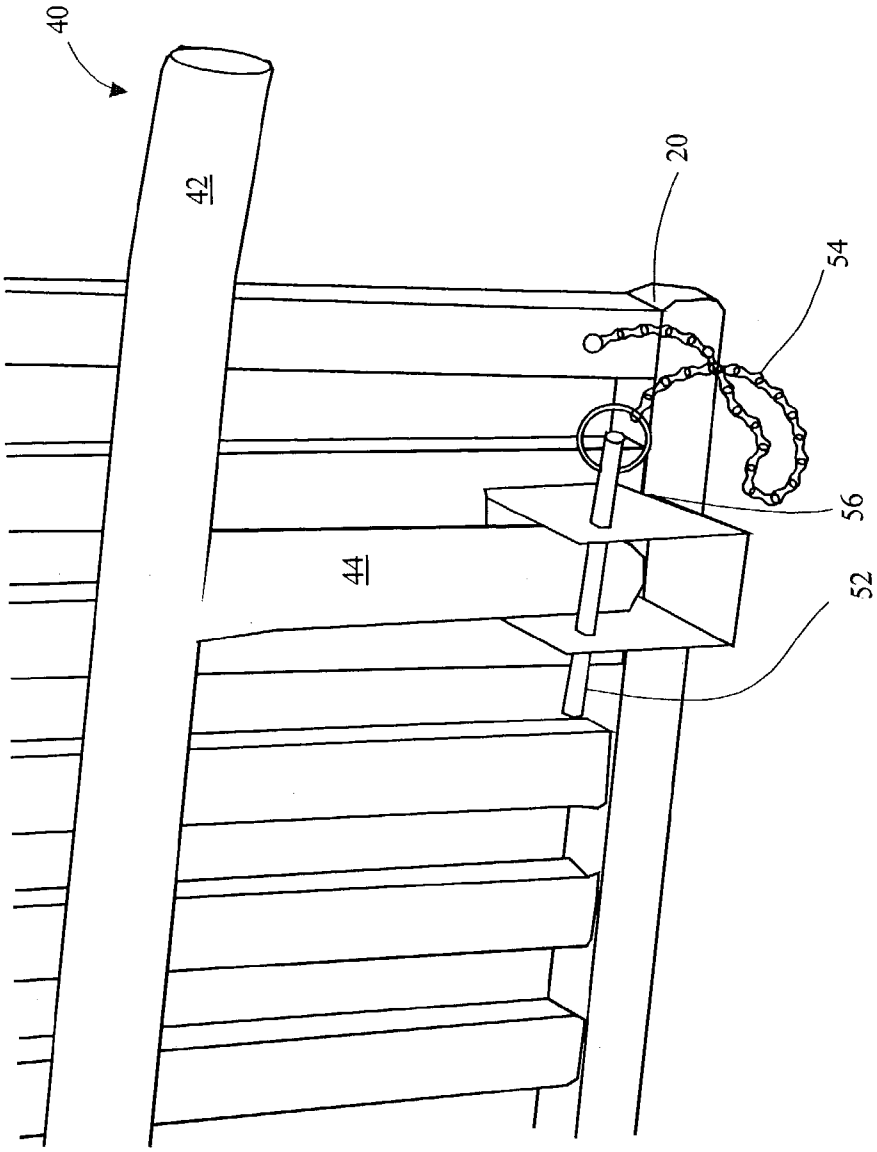

FIG. 4

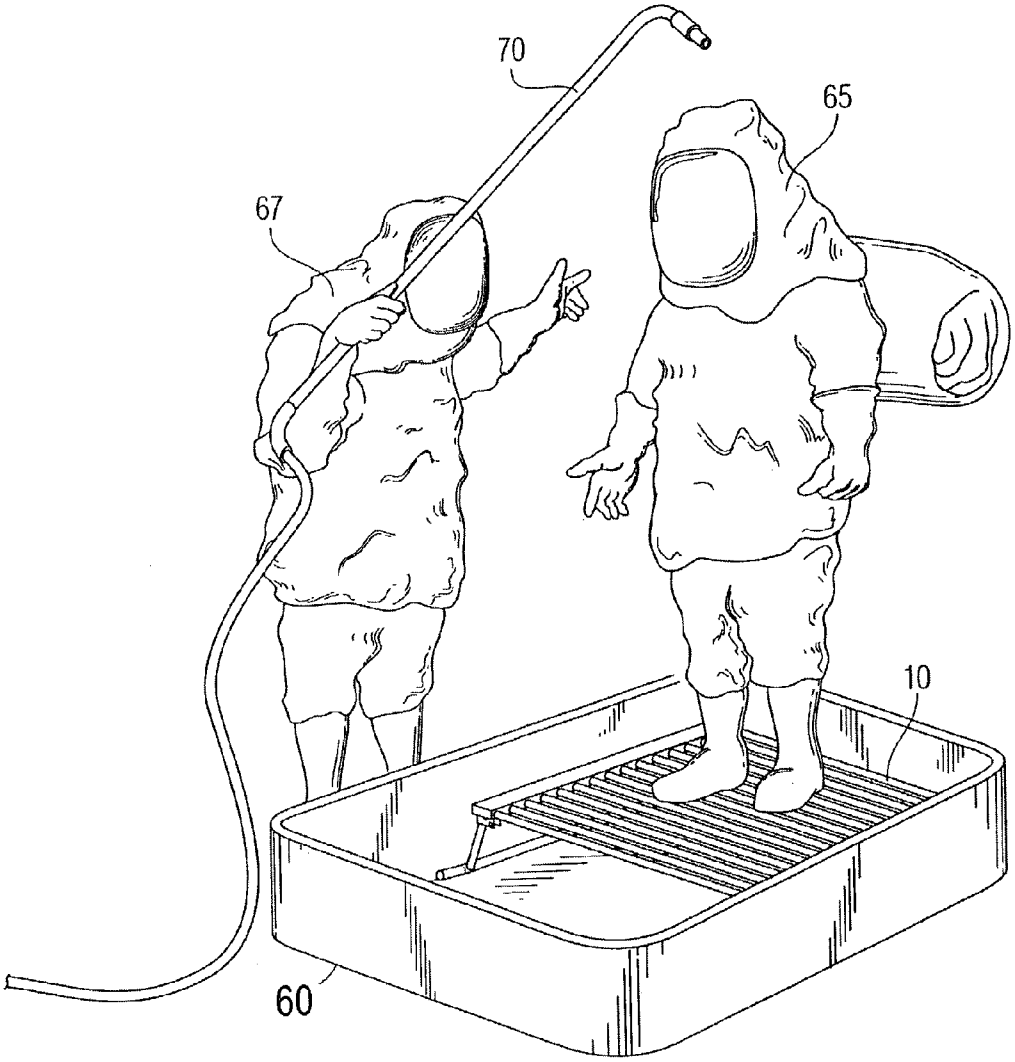

Fig. 5

HAZARDOUS MATERIALS DECONTAMINATION PLATFORM

STATEMENT OF GOVERNMENT INTEREST

The invention described herein may be manufactured and used by or for the Government of the United States of America for governmental purposes without payment of any royalties thereon or therefor.

BACKGROUND OF THE INVENTION

1. Field of the Invention

The present invention relates to devices which facilitate hazardous materials decontamination procedures and, more particularly, to a portable, durable, re-usable platform for use in the performance of said decontamination procedures.

2. Description of the Background

Hazardous materials response personnel ("responders"), such as firefighters, are typically subjected to some form of on-site decontamination procedure once the circumstances requiring their presence have been addressed. Often, one or more fully-encapsulated hazardous material suits must be deployed to ensure the safety of the responders while working with, or in the vicinity of, the hazardous material(s). Use of one or more of those suits requires that they be subjected to thorough decontamination prior to storage for future use. One procedure for accomplishing the required on-site decontamination is the washing of the suit's exterior with an appropriate cleaning/decontamination agent while being worn by the responder. However, due to the presence of hazardous materials in the fluid runoff, the procedure must include the collection of that contaminated runoff in some form of temporarily deployed vessel.

Previously, responders grabbed any convenient implement to elevate themselves above the collection vessel (and accumulated fluid), inclusive of plastic or metal, "milk"-style crates and plastic pallets. Unfortunately, these unintended devices raise safety issues such as: (1) insufficient structural strength to support the combined weight of the responder and the hazardous materials suit, (2) insufficient lateral stability while the responder is stepping on or off the apparatus, and (3) insufficient physical size (i.e. length, width). When a responder is wearing a fully-encapsulated hazardous materials suit, his/her vision and dexterity are severely compromised. If a responder trips and/or falls while attempting to step on or off the elevated apparatus, needless injury to or direct contamination of his/her body, and damage or destruction of the hazardous materials suit, can result.

The present invention is not the first to address the need for elevated support platforms used in association with the clean up and/or containment of hazardous materials. For example, U.S. Pat. Nos. 4,838,178 to Chriske et al., 5,020,667 to Bush, and 6,382,108 to Stanek et al. disclose platforms designed to accommodate hazardous materials. Each of the platforms has a perforated top surface and an integral containment vessel. Additional devices intended to facilitate cleaning and/or decontamination procedures are found in U.S. Pat. Nos. 4,675,923 to Ashley, 4,858,256 to Shankman, and 6,164,298 to Petter et al. Each of those apparatus include a platform on which an individual may stand, or an object may be situated, such that a cleaning/decontamination procedure may be completed.

Unfortunately, each of these prior art devices possesses certain limitations with respect to the specific needs addressed by the present invention. The Chriske et al., Bush, and Stanek et al. devices do not incorporate collapsible and

weight-minimizing designs to emphasize ease of storage and portability. They are each, in fact, intended primarily for transportation via fork-lift trucks. The platforms of the Ashley, Shankman, and Petter et al. apparatus are piecemeal components of far more elaborate systems and are likewise not at all portable.

Therefore, there remains a need for a portable apparatus that provides a substantial degree of utility in supporting the weight of a responder wearing a fully-encapsulated hazardous materials suit in an elevated position during on-site decontamination procedures. An apparatus of this type should be sized to provide a responder, even with the limited vision/dexterity imposed by the hazardous materials suit, with a large enough area to safely maneuver during decontamination, collapsible to allow for easy storage and transportation, lightweight for optimum portability, and economical to manufacture in order to provide for widespread use.

SUMMARY OF THE INVENTION

It is, therefore, the primary object of the present invention to provide an improved apparatus for supporting hazardous materials response personnel in an elevated position during on-site decontamination procedures.

It is another object of the present invention to provide an improved elevated platform for use during on-site decontamination procedures that prevents damage to the temporarily deployed hazardous material containment vessel.

It is still another object of the present invention to provide an improved elevated platform for use during on-site decontamination procedures that is collapsible for storage and transport.

Yet another object of the present invention is to provide an improved elevated platform for use during on-site decontamination procedures with folding leg assemblies that also serve as handles for transportation.

It is another object of the present invention to provide an improved elevated platform for use during on-site decontamination procedures that is lightweight for portability.

Still another object of the present invention is to provide an improved elevated platform for use during on-site decontamination procedures that is economical to manufacture to provide for widespread use.

These and other objects are accomplished by a portable, re-usable, elevated platform that provides a large, non-slip, grated surface on which an individual wearing a fully-encapsulated, hazardous materials suit may stand, and turn as needed, to ensure thorough on-site decontamination. The present invention generally comprises a top grate and two folding/pivoting support leg assemblies with locking pins. The elevated design allows for the collection of the hazardous material runoff in a containment vessel deployed underneath. The present invention is fabricated of impervious, strong, lightweight materials (e.g. aluminum) to prevent absorption of any hazardous materials and to provide sufficient structural strength while keeping its overall weight reasonable (i.e. to be transported/set-up by a single individual). Moreover, the closed-cell design of the present device prevents any accumulation of chemicals which might otherwise pose a hazard. All chemicals run through for collection in a basin. The present invention's design is simple and straightforward, and can be economically manufactured.

The support leg assemblies are pivotally mounted at each end of the frame and fold inward, and lock in position, for storing or transporting the platform. Upon folding outward, locking pins hold the legs in position substantially perpen-

dicular to the top grate. The ends of the leg assemblies are sealed to prevent the retention/cross-contamination of any hazardous materials and turned slightly upward at the ends to prevent damage to the containment vessel.

BRIEF DESCRIPTION OF THE DRAWINGS

Other objects, features, and advantages of the present invention will become more apparent from the following detailed description of the preferred embodiments and certain modifications thereof when taken together with the accompanying drawings in which:

FIG. **1** is a top perspective view of a decontamination platform **10** according to a first embodiment of the present invention.

FIG. **2** is a side perspective view of the decontamination platform **10** as in FIG. **1** showing one leg assembly **40** in the folded position and a second leg assembly **40'** in the extended position.

FIG. **3** is a partial bottom perspective view of the decontamination platform **10** as in FIGS. **1** and **2**, showing a leg assembly **40'**.

FIG. **4** is a close up view of a leg assembly **40**.

FIG. **5** is a perspective view of the decontamination platform **10** shown in use during a hazardous materials decontamination procedure.

DETAILED DESCRIPTION OF THE PREFERRED EMBODIMENTS

FIGS. **1–3** are, respectively, top, side, and partial bottom perspective views of a decontamination platform **10** according to a preferred embodiment of the present invention. The decontamination platform **10** generally comprises a top grate **20** and two folding/pivoting support leg assemblies **40, 40'**.

The top grate **20** typically includes two end members **22** and a plurality of cross members **24**. The end members **22** and cross members **24** are preferably fabricated of commercially available aluminum solid bar or tubular stock having a rectangular cross-section. The end members **22** are sealed with aluminum plugs to prevent ingress and collection of hazardous materials. Each end of a cross member **24** is fixedly attached to one of the end members **22**. The cross members **24** are preferably attached by welding to the end members **22**, and a full butt weld is preferred to seal the hollow interior of the cross members **24**. The net result, as shown in FIG. **1**, is a substantially square assembly with a flat platform top and a series of equal gaps between the cross members **24**.

Tape **26** possessing a high coefficient of friction on its exposed surface is adhesively attached to the top surfaces of the end and cross members **22, 24**, respectively.

In the illustrated embodiment the top grate **20** measures approximately 48" along each side, thereby providing a 16 square foot surface on which a responder may stand while being decontaminated, with equal gaps of 1.5" to 2.5" between the cross members to provide adequate drainage. Alternative embodiments of the present invention may include top grates **20** that vary in size and are fabricated of materials other than aluminum. It should also be understood that alternative embodiments may include gaps between the cross members **24** that measure more or less than 1.5" to 2.5".

FIG. **4** is a close up view of a leg assembly **40**, according to a first embodiment of the present invention, shown in the folded position. Two leg assemblies **40, 40'** are pivotally mounted to the top grate **20** proximate points where the cross members **24** are fixedly connected to the end members **22**. Each of the leg assemblies **40, 40'** preferably includes a foot/crossbar **42**, two support members **44**, two mounting brackets **46**, two commercially available pivot pins **48**, two commercially available spring-loaded quick-release pins **52**, and two commercially available pin retention chains **54**. The foot/crossbar **42**, two support members **44**, and two mounting brackets **46** are preferably fabricated of commercially available aluminum solid round or tubular stock. As above all open ends of the tubular stock are sealed with aluminum plugs to prevent ingress and collection of hazardous materials. Alternative embodiments of the present invention may include feet/crossbars **42**, support members **44**, and mounting brackets **46** that are fabricated of materials other than aluminum. Alternative embodiments may also include more than two support members **44** and more than two mounting brackets **46** per leg assembly.

The leg assemblies **40, 40'** are constructed as follows. One end of each of the support members **44** is fixedly attached perpendicularly to a foot/crossbar **42**. The opposite end of each of the support members **44** is pivotally attached to a mounting bracket **46** via a pivot pin **48**. The mounting brackets **46** are fixedly attached to the top grate **20** proximate points where the cross members **24** are fixedly connected to the end members **22**. The linear spacing of the support members **44**, as attached to the foot/crossbar **42**, is preferably equivalent to that of the mounting brackets **46**, as attached to the top grate **20**. Both ends of each foot/crossbar **42** are bent slightly in the direction of the support members **44** such that when the leg assemblies **40, 40'** are extended and the platform **10** is resting on a surface, the ends of the feet/crossbars **42** are angled slightly away from that surface.

The retention chains **54** are used to establish a permanent, yet flexible, connection between the quick-release pins **52** and the top grate **20**. In this manner, the pins **52** are not subject to being misplaced/lost during the platform **10** set up, or tear down, process described in detail below. The quick-release pins **52** are inserted in through holes **56**, and are thereby releasably attached to the mounting bracket **46**, to hold the leg assemblies **40, 40'** in either the folded or extended position.

The leg assemblies **40, 40'** fold inward (i.e. toward the top grate **20**) for storing or transporting the platform **10**. Upon folding outward, the quick-release pins **52** hold the leg assemblies **40, 40'** in position substantially perpendicular to the top grate **20**. The leg assemblies **40, 40'** pivot about pins **48** that extend through the mounting brackets **46** and the support members **44**.

With collective reference to FIGS. **1–4**, the set up process for the decontamination platform **10**, from its fully collapsed configuration for storage or transportation, begins with the extension of the leg assemblies **40, 40'**. This is accomplished by first placing the collapsed platform **10** upside down on the ground or floor (i.e. essentially resting on the tape **26** affixed to the top grate **20**). Each leg assembly **40, 40'** is extended by removing the quick-release pins **52** from the holes **56**, grasping the foot/crossbar **42** and pulling. As the foot/crossbar **42** moves away from the top grate **20**, the support members **44** rotate around the pivot pins **48**. Once the support members **44** reach a position that is substantially perpendicular to the top grate **20**, the leg assembly **40'** is locked in the extended position by replacing the quick-release pins **52** in the holes **56** located in the mounting brackets **46**.

Once both leg assemblies **40, 40'** have been extended and locked in place, the platform **10** may be turned over and set upon the ground or floor (i.e. resting in a stable configuration

on feet/crossbars **42**). The total time required to set up the platform, from its fully collapsed state, is approximately one minute. As noted above, the ends of the feet/crossbars **42** are angled slightly away from the ground or floor. In this manner, the probability of damaging or puncturing the hazardous materials collection vessel **60** (see FIG. **5**), on which the platform **10** is typically positioned, is minimized, if not eliminated.

To fold the present invention into its fully collapsed configuration for storage or transportation, the platform **10** is first placed upside down on the ground or floor (i.e. again resting on the tape **26** affixed to the top grate **20**). Each of the leg assemblies **40**, **40'** is collapsed by removing the quick-release pins **52** from the holes **56** and pushing the foot/crossbar **42** toward the top grate **20**. This causes the support members **44** to rotate around the pivot pins **48**. Once the support members **44** reach a position that is substantially parallel to the top grate **20**, the leg assembly **40** is locked in the folded position by replacing the quick-release pins **52** in the holes **56** located in the mounting brackets **46**. Due to the extension of the feet/crossbars **42** beyond the edges of the top grate **20**, the legs assemblies **40**, **40'**, when locked in the folded or collapsed position, also serve as handles to assist in the transportation of the decontamination platform **10** by one or two individuals.

When used as intended and as shown in FIG. **5**, the platform **10**, with its leg assemblies **40**, **40'** extended, is placed proximate the center of a hazardous materials collection vessel **60**. A responder **65** wearing a fully encapsulated hazardous materials suit steps onto the platform **10**, thereby placing himself/herself in an elevated position over the containment vessel **60**. A second responder **67** may then thoroughly decontaminate the exterior surface of the hazardous materials suit worn by the first responder **65** by applying an appropriate liquid via a nozzle assembly **70**. The liquid dripping off of the hazardous materials suit falls through the top grate **20** of the platform **10** and collects in the containment vessel **60** for proper disposal.

As is readily perceived in the foregoing description, the portable, re-usable, elevated platform **10** of the present invention provides a large, non-slip, grated surface **20** on which an individual **65** wearing a fully-encapsulated, hazardous materials suit may stand, extend his/her arms, and turn as needed, to ensure thorough on-site decontamination. The platform **10** may even be utilized to decontaminate an individual that has been injured and is lying on an emergency medical service "spine board". The elevated design of the present invention allows for the collection of the hazardous material runoff in a containment vessel **60** deployed underneath. The collapsible nature of its design provides for easy storage and manual transportation. The design of the feet/crossbars **42** reduces the probability of damage to the containment vessel **60** and assists in the transportation of the platform **10**. The present invention is fabricated of impervious, strong, lightweight materials (e.g. aluminum) to prevent absorption of any hazardous materials, and the tubular construction provides sufficient structural strength (i.e. to support up to 600 lbs.) while keeping the overall weight reasonable (i.e. to be transported/set-up by a single individual). The present invention's design is simple and straightforward, and can be economically manufactured.

Having now fully set forth the preferred embodiment and certain modifications of the concept underlying the present invention, various other embodiments as well as certain variations and modifications of the embodiments herein shown and described will obviously occur to those skilled in the art upon becoming familiar with said underlying concept. It is to be understood, therefore, that the invention may be practiced otherwise than as specifically set forth in the appended claims.

We claim:

1. A decontamination platform for elevating a responder, having weight, above a fluid collection vessel, comprising:

a top grate; and

two leg assemblies pivotally attached to said top grate, each of said leg assemblies comprising:

a pair of support members each pivotally attached proximate a corner of said top grate;

a pair of locking hinges mounted on said top grate for pivotally attaching said pair of support members and for selectively locking them in position;

a crossbar integrally joining the pair of support members and having curved-in ends, whereby when said leg assembly is pivoted downward at the support members the crossbar serves to distribute the weight and the curved-in ends avoid damage to the collection vessel; and

wherein said ends of said crossbars of said leg assemblies extend beyond edges of said top grate, thereby serving as handles for transporting said decontamination platform.

2. The decontamination platform according to claim **1** wherein said top grate further comprises:

at least two end members; and

a plurality of cross members fixedly attached to said end members.

3. The decontamination platform according to claim **2** wherein said plurality of cross members are fixedly attached to said end members such that gaps of 1.5" to 2.5" exist between said cross members to provide adequate drainage through said top grate.

4. The decontamination platform according to claim **2** wherein said end members and said plurality of cross members are fabricated of solid bar stock to prevent ingress and collection of hazardous materials.

5. The decontamination platform according to claim **2** wherein said end members and said plurality of cross members are fabricated of tubular stock with all open ends being sealed to prevent ingress and collection of hazardous materials.

6. The decontamination platform according to claim **1** wherein said top grate further comprises adhesively attached tape, said tape possessing a high coefficient of friction on its exposed surface.

7. The decontamination platform according to claim **1** wherein said top grate is fabricated of aluminum.

8. The decontamination platform according to claim **1** wherein said leg assemblies further comprise locking means for maintaining said leg assemblies in either a folded or an extended position.

9. The decontamination platform according to claim **8** wherein said locking means further comprise a spring-loaded quick-release pin installed in a through hole.

10. The decontamination platform according to claim **1** wherein said support members and said feet/crossbars of said leg assemblies are fabricated of solid bar stock to prevent ingress and collection of hazardous materials.

11. The decontamination platform according to claim **1** wherein said support members and said feet/crossbars of said leg assemblies are fabricated of tubular stock with all open ends being sealed to prevent ingress and collection of hazardous materials.

12. The decontamination platform according to claim **1** wherein said support members and said feet/crossbars, of said leg assemblies are fabricated of aluminum.

* * * * *