US008656081B2

(12) **United States Patent**
Irizarry

(10) **Patent No.: US 8,656,081 B2**
(45) **Date of Patent: Feb. 18, 2014**

(54) **SYSTEM AND METHOD FOR COORDINATING CONTROL OF AN OUTPUT DEVICE BY MULTIPLE CONTROL CONSOLES**

(75) Inventor: **George Luis Irizarry**, Bloomington, IN (US)

(73) Assignee: **The United States of America as represented by the Secretary of the Navy**, Washington, DC (US)

(*) Notice: Subject to any disclaimer, the term of this patent is extended or adjusted under 35 U.S.C. 154(b) by 822 days.

(21) Appl. No.: **12/723,158**

(22) Filed: **Mar. 12, 2010**

(65) **Prior Publication Data**

US 2011/0225531 A1 Sep. 15, 2011

(51) **Int. Cl.**
G06F 13/00 (2006.01)

(52) **U.S. Cl.**
USPC **710/316**; 710/241

(58) **Field of Classification Search**
USPC 710/38, 110, 113, 305, 309, 316, 317, 710/240, 241
See application file for complete search history.

(56) **References Cited**

U.S. PATENT DOCUMENTS

3,916,380	A *	10/1975	Fletcher et al.	340/2.26
4,417,245	A *	11/1983	Melas et al.	340/2.22
4,825,151	A	4/1989	Aspelin	
5,034,686	A	7/1991	Aspelin	
5,091,847	A	2/1992	Herbermann	
5,267,235	A *	11/1993	Thacker	370/396
5,276,728	A	1/1994	Pagliaroli et al.	
5,535,197	A *	7/1996	Cotton	370/395.72
5,949,015	A	9/1999	Smith et al.	
6,542,076	B1	4/2003	Joao	
6,691,193	B1 *	2/2004	Wang et al.	710/200
6,816,088	B1	11/2004	Knoska et al.	
6,985,985	B2 *	1/2006	Moss	710/240
6,986,302	B2	1/2006	LaFata	
7,020,161	B1 *	3/2006	Eberle et al.	370/468
7,089,314	B2 *	8/2006	Tomikawa et al.	709/229
7,092,867	B2	8/2006	Huang et al.	
7,099,755	B2	8/2006	Mueller et al.	
7,172,474	B2	2/2007	Rzadki et al.	
7,228,261	B2	6/2007	Leonard et al.	
7,266,632	B2 *	9/2007	Dao et al.	710/317
7,673,085	B2 *	3/2010	Kuo	710/110
8,125,109	B2 *	2/2012	Dold	307/326
2003/0058130	A1	3/2003	Kramer et al.	
2003/0058602	A1 *	3/2003	Veil	361/166
2004/0007121	A1	1/2004	Graves et al.	
2004/0103296	A1	5/2004	Harp et al.	
2004/0112238	A1	6/2004	Talbot	
2011/0202650	A1 *	8/2011	Abraham et al.	709/224

OTHER PUBLICATIONS

Diode Switching Circuits, All About Circuits, <http://www.allaboutcircuits.com/vol_3/chpt_3/10.html#>, accessed on Aug. 28, 2012.*

* cited by examiner

Primary Examiner — Khanh Dang
(74) *Attorney, Agent, or Firm* — Christopher A. Monsey

(57) **ABSTRACT**

A system and method for interfacing multiple inputs and outputs in a control system is provided. A digital input/output system provides a localized interface between multiple operator consoles and at least one output device to coordinate and monitor the operation of the at least one output device. The digital input/output system includes an interface device which re-routes discrete lines to and from the operator consoles and output devices and eliminates conflicting signals sent from the operator consoles to the output devices.

28 Claims, 19 Drawing Sheets

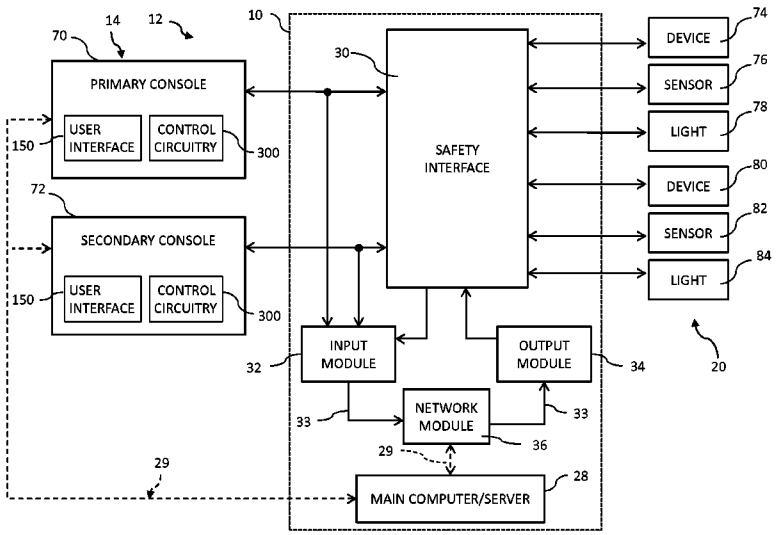

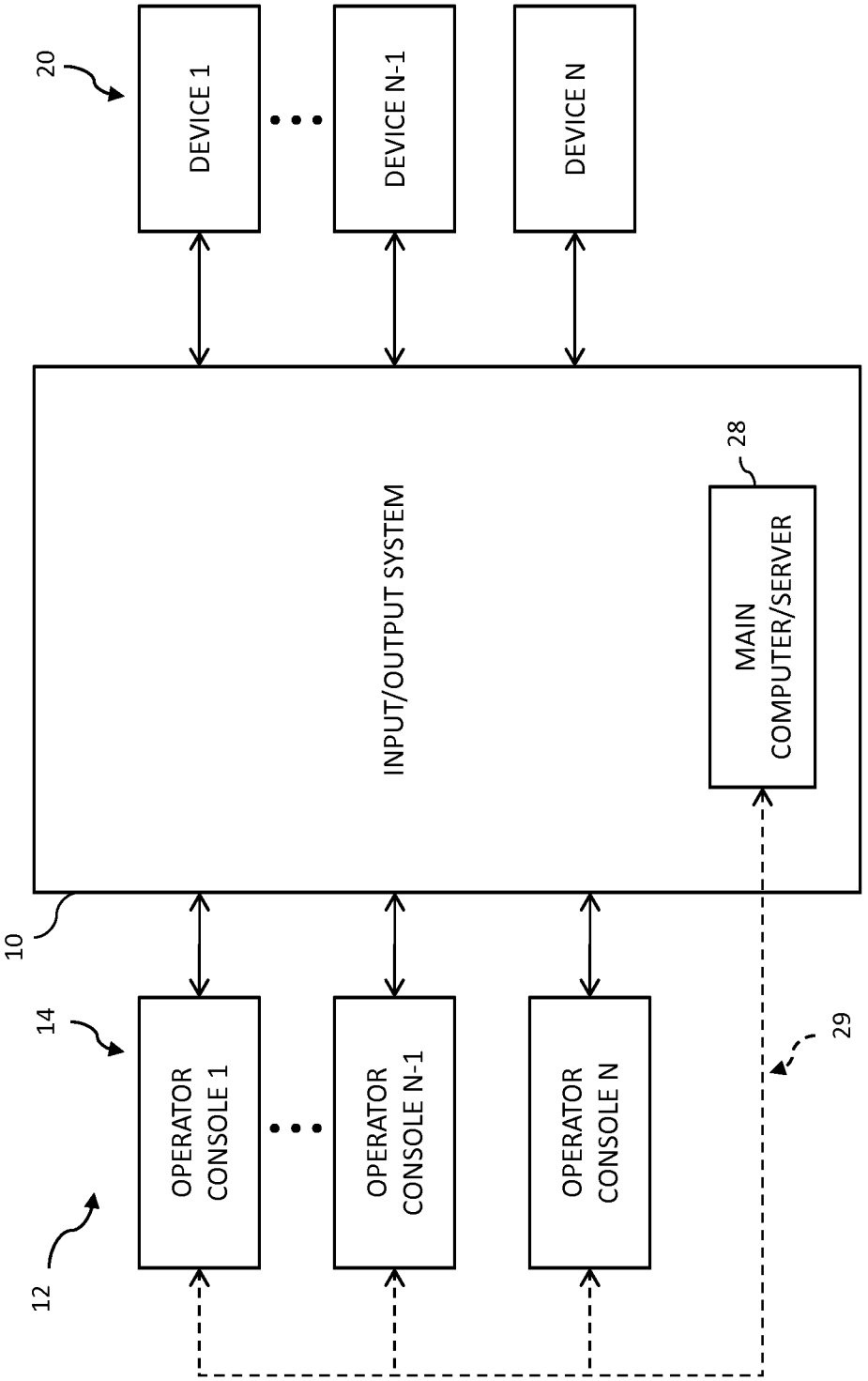
20
DEVICE 1
DEVICE N-1
DEVICE N
10
INPUT/OUTPUT SYSTEM
28
MAIN COMPUTER/SERVER
14
12
OPERATOR CONSOLE 1
OPERATOR CONSOLE N-1
OPERATOR CONSOLE N
29

FIG. 1

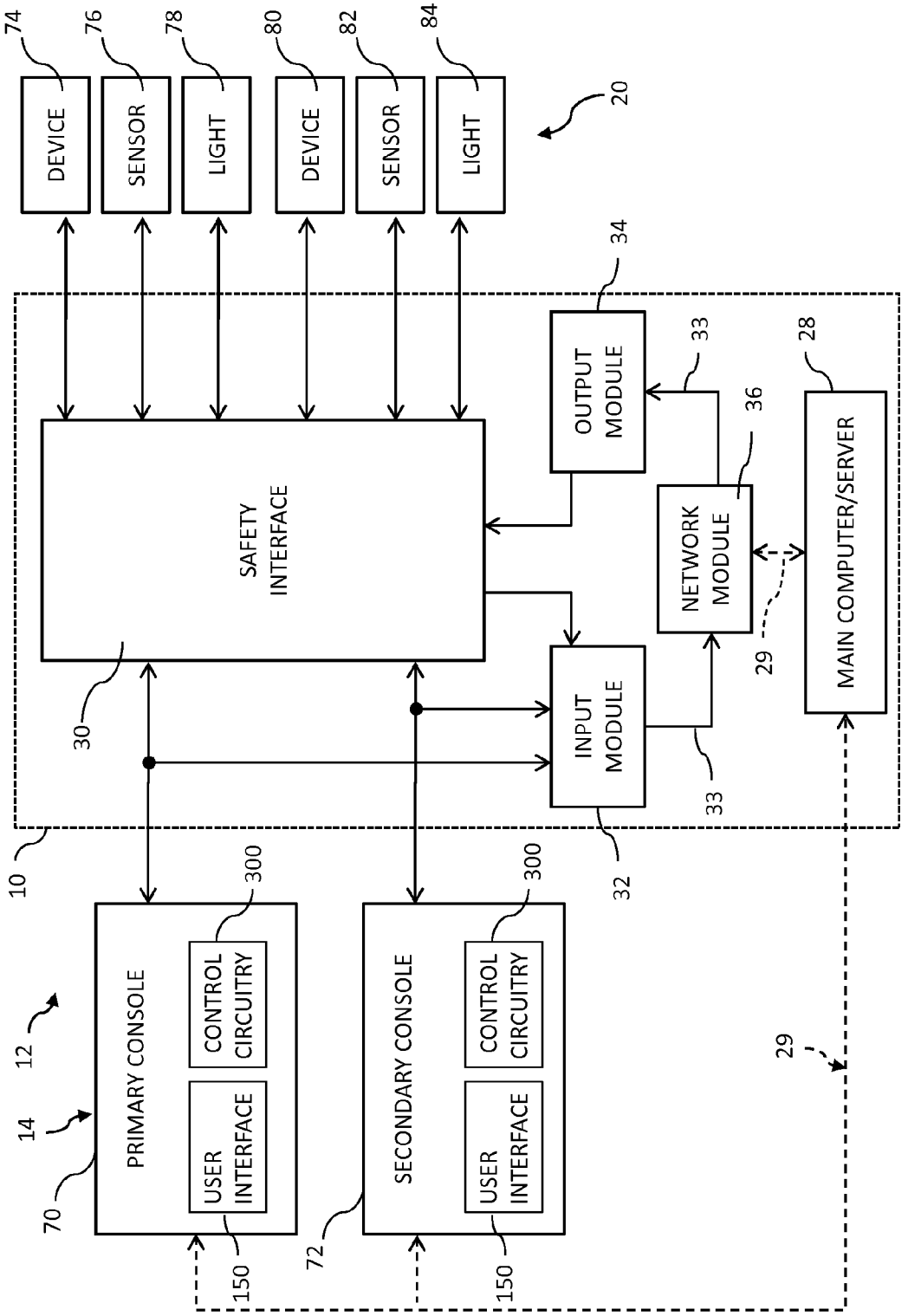
DEVICE
SENSOR
LIGHT
DEVICE
SENSOR
LIGHT
74
76
78
80
82
84
20
SAFETY INTERFACE
30
OUTPUT MODULE
34
33
NETWORK MODULE
36
INPUT MODULE
32
33
MAIN COMPUTER/SERVER
28
29
10
PRIMARY CONSOLE
USER INTERFACE
CONTROL CIRCUITRY
300
70
150
12
14
SECONDARY CONSOLE
USER INTERFACE
CONTROL CIRCUITRY
300
72
150
29

FIG. 2

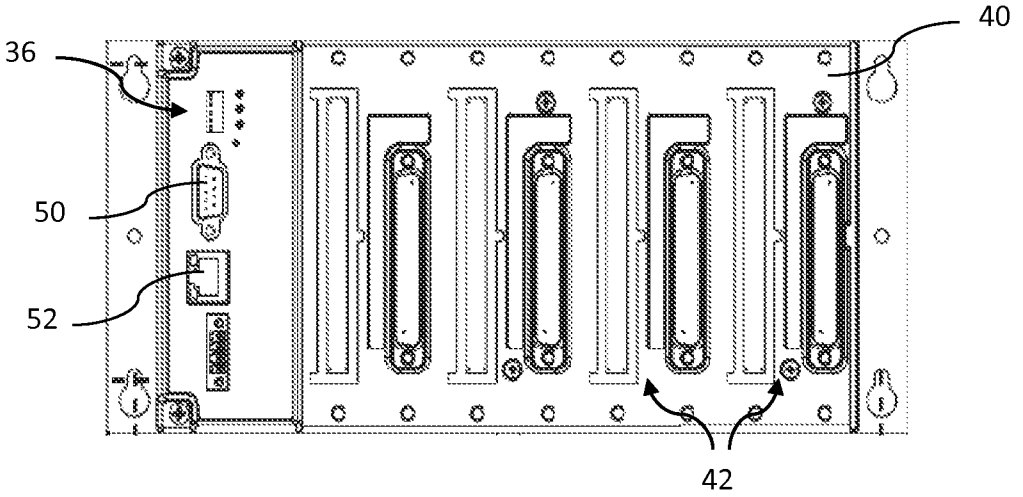

FIG. 3

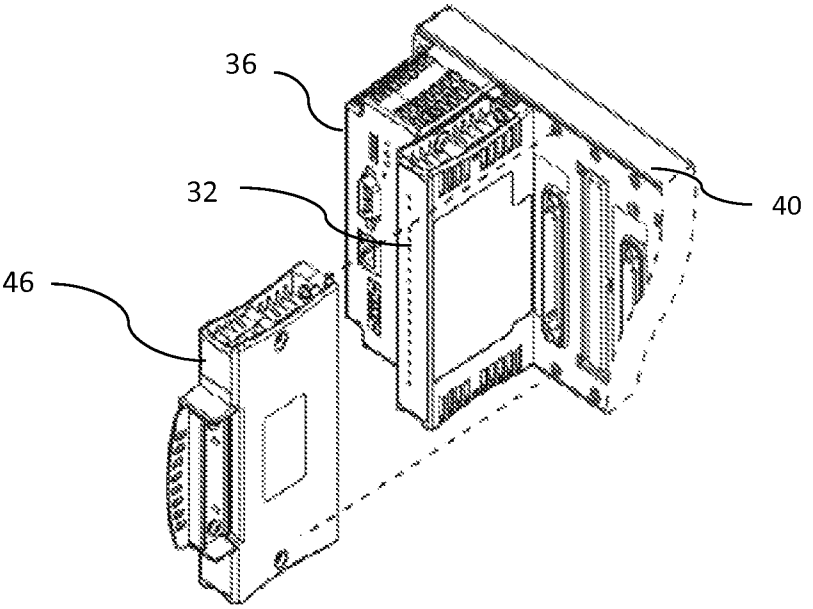

FIG. 4

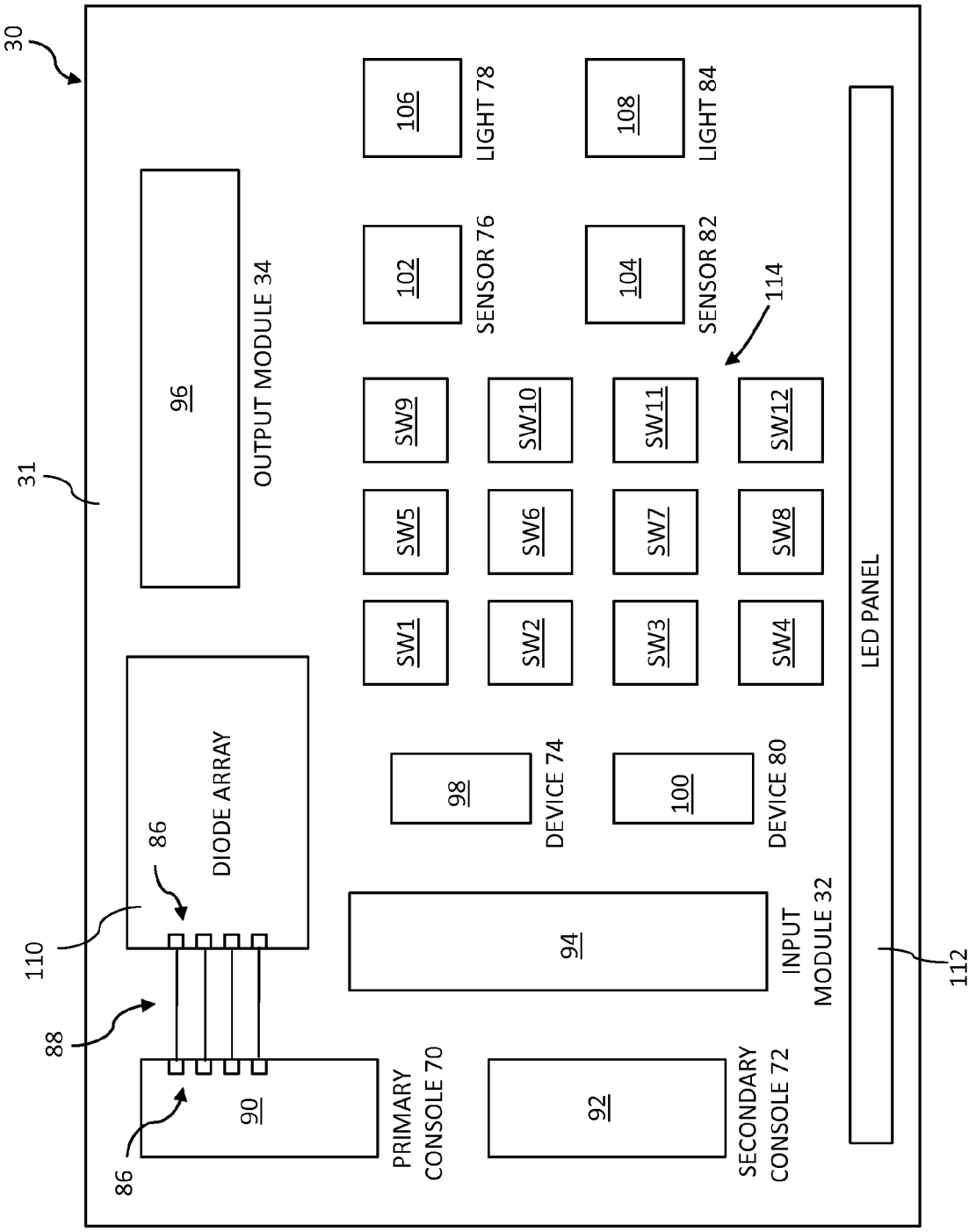
30
31
96
OUTPUT MODULE 34
106
LIGHT 78
108
LIGHT 84
102
SENSOR 76
104
SENSOR 82
114
SW9
SW10
SW11
SW12
SW5
SW6
SW7
SW8
SW1
SW2
SW3
SW4
LED PANEL
DIODE ARRAY
86
98
DEVICE 74
100
DEVICE 80
110
94
INPUT MODULE 32
112
88
90
PRIMARY CONSOLE 70
92
SECONDARY CONSOLE 72
86

FIG. 5

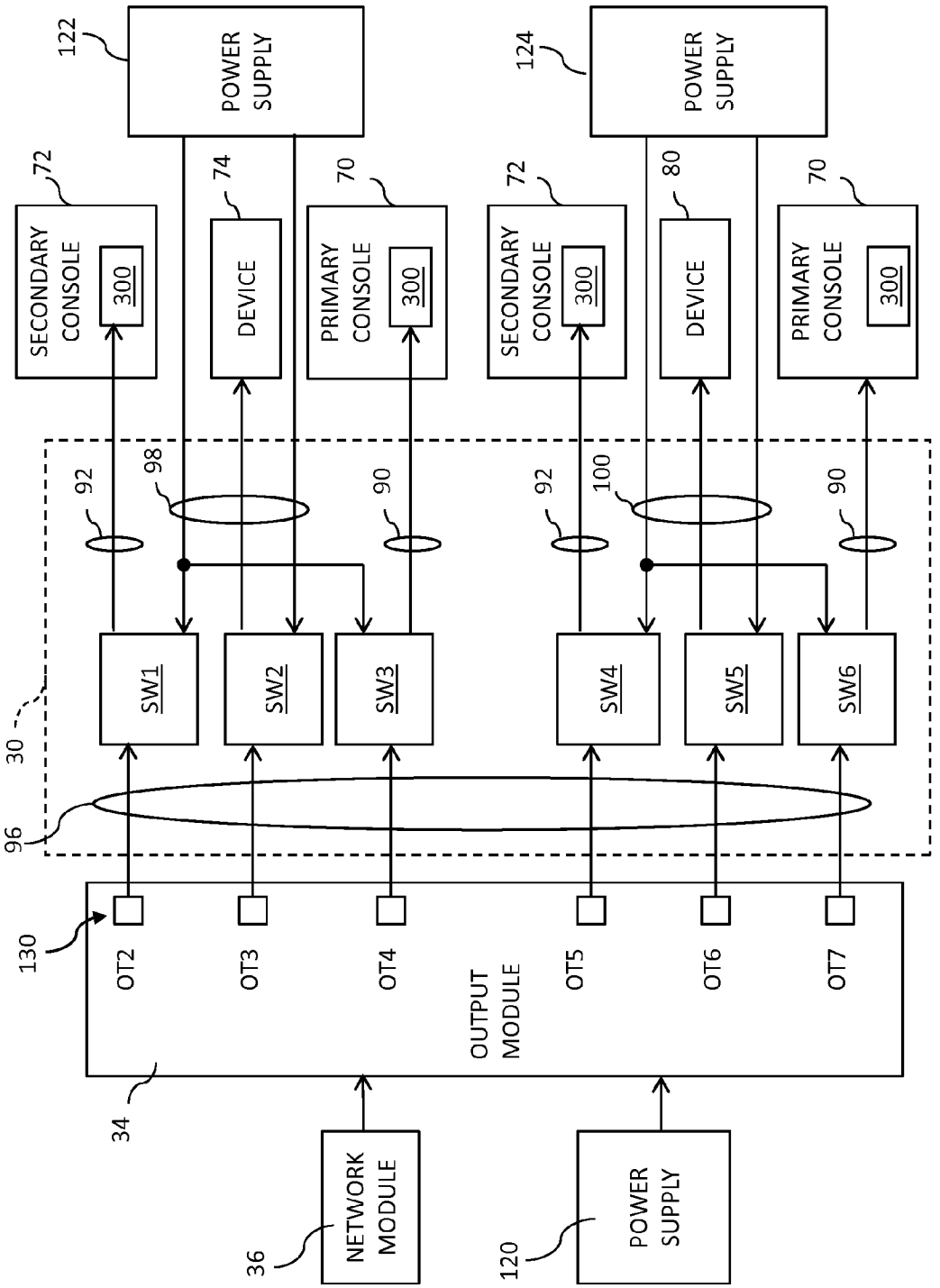
122
POWER SUPPLY
124
POWER SUPPLY
72
SECONDARY CONSOLE
300
74
DEVICE
70
PRIMARY CONSOLE
300
72
SECONDARY CONSOLE
300
80
DEVICE
70
PRIMARY CONSOLE
300
92
98
90
92
100
90
30
SW1
SW2
SW3
SW4
SW5
SW6
96
130
OT2
OT3
OT4
OUTPUT MODULE
OT5
OT6
OT7
34
36
NETWORK MODULE
120
POWER SUPPLY

FIG. 6

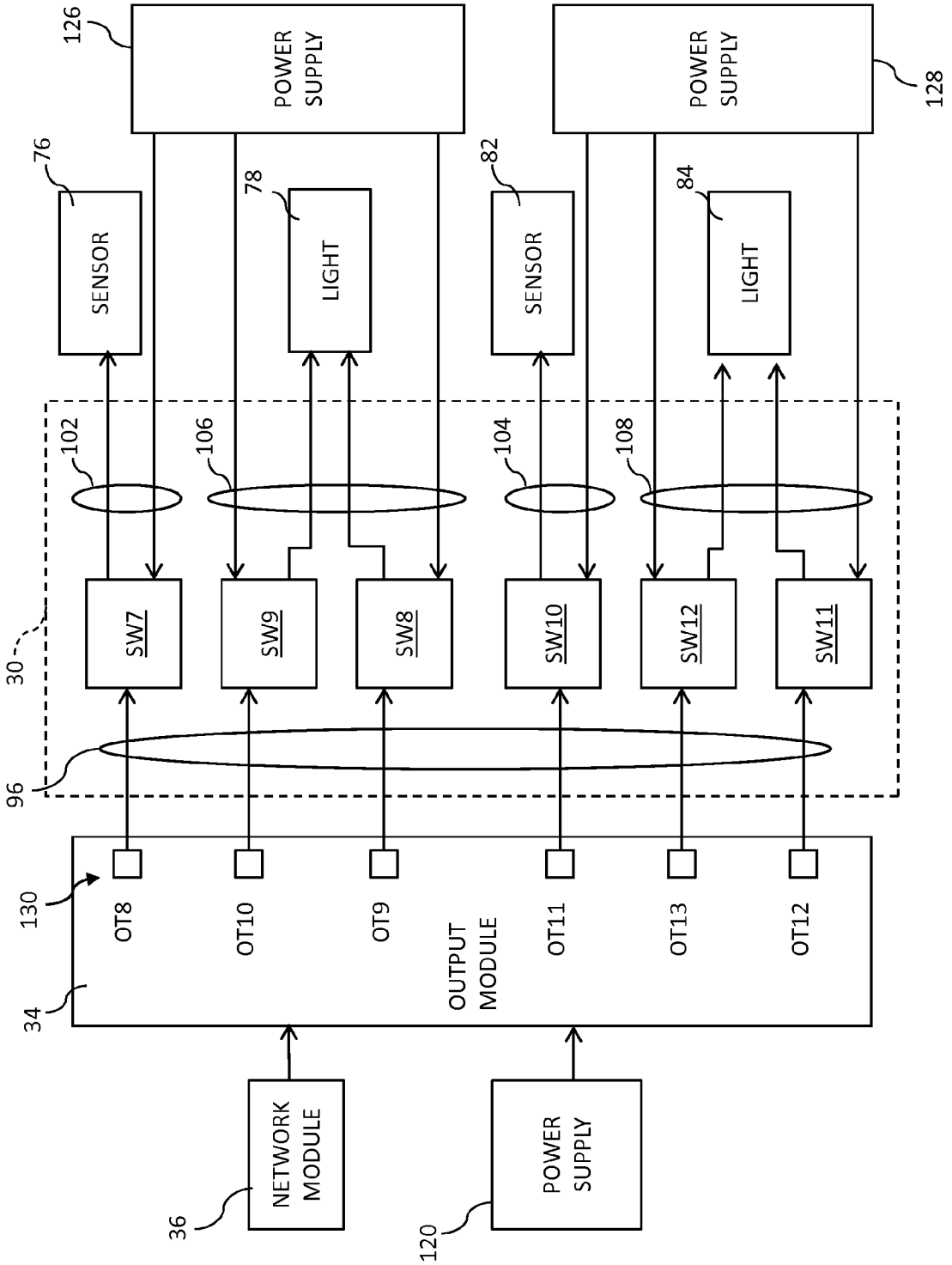
126
POWER SUPPLY
128
POWER SUPPLY
76
SENSOR
78
LIGHT
82
SENSOR
84
LIGHT
102
106
104
108
30
SW7
SW9
SW8
SW10
SW12
SW11
96
130
OT8
OT10
OT9
OUTPUT MODULE
OT11
OT13
OT12
34
NETWORK MODULE
36
POWER SUPPLY
120

FIG. 7

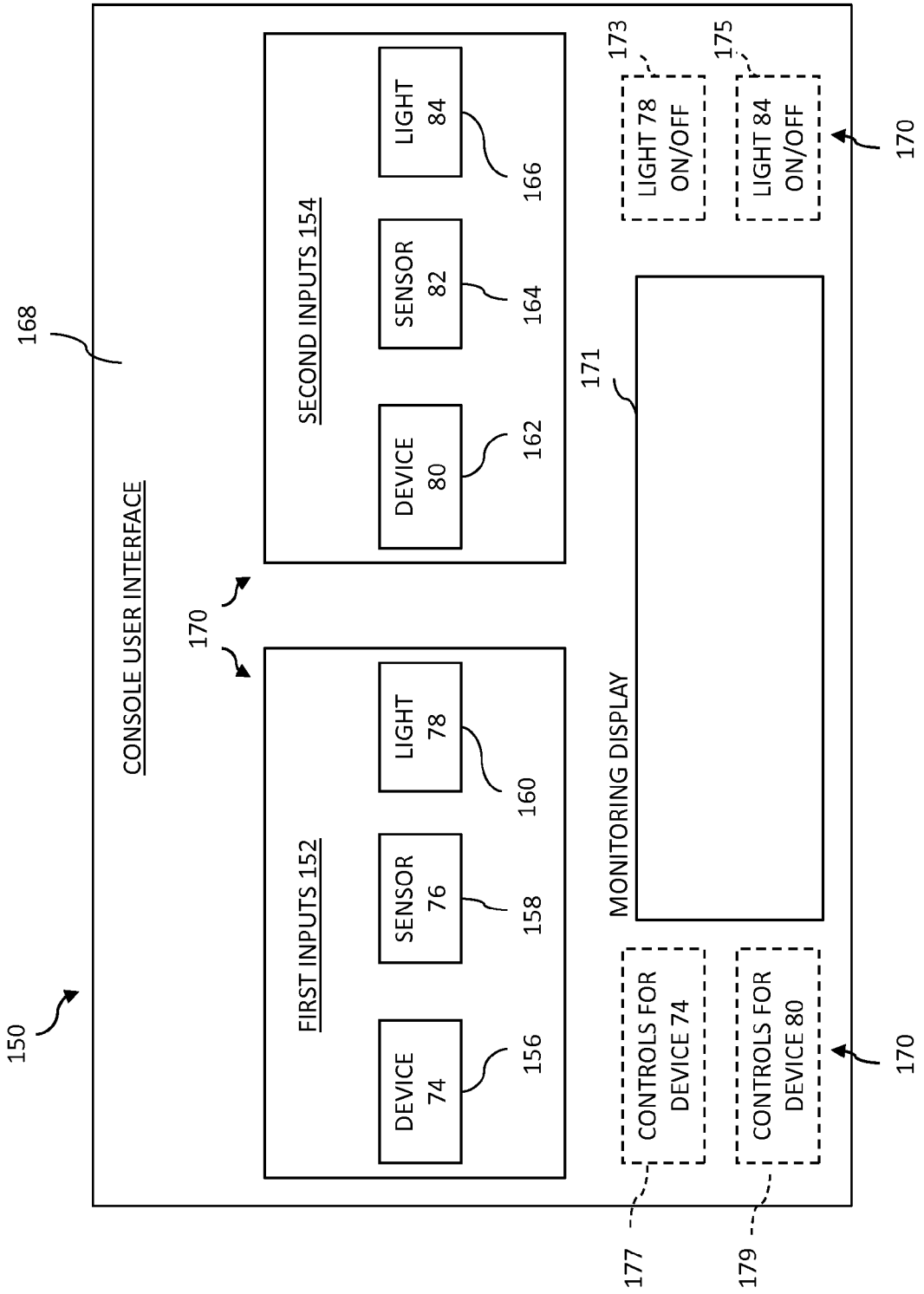
150
168
CONSOLE USER INTERFACE
170
FIRST INPUTS 152
DEVICE 74
156
SENSOR 76
158
LIGHT 78
160
SECOND INPUTS 154
DEVICE 80
162
SENSOR 82
164
LIGHT 84
166
MONITORING DISPLAY
171
CONTROLS FOR DEVICE 74
177
CONTROLS FOR DEVICE 80
179
LIGHT 78 ON/OFF
173
LIGHT 84 ON/OFF
175
170
170

FIG. 8

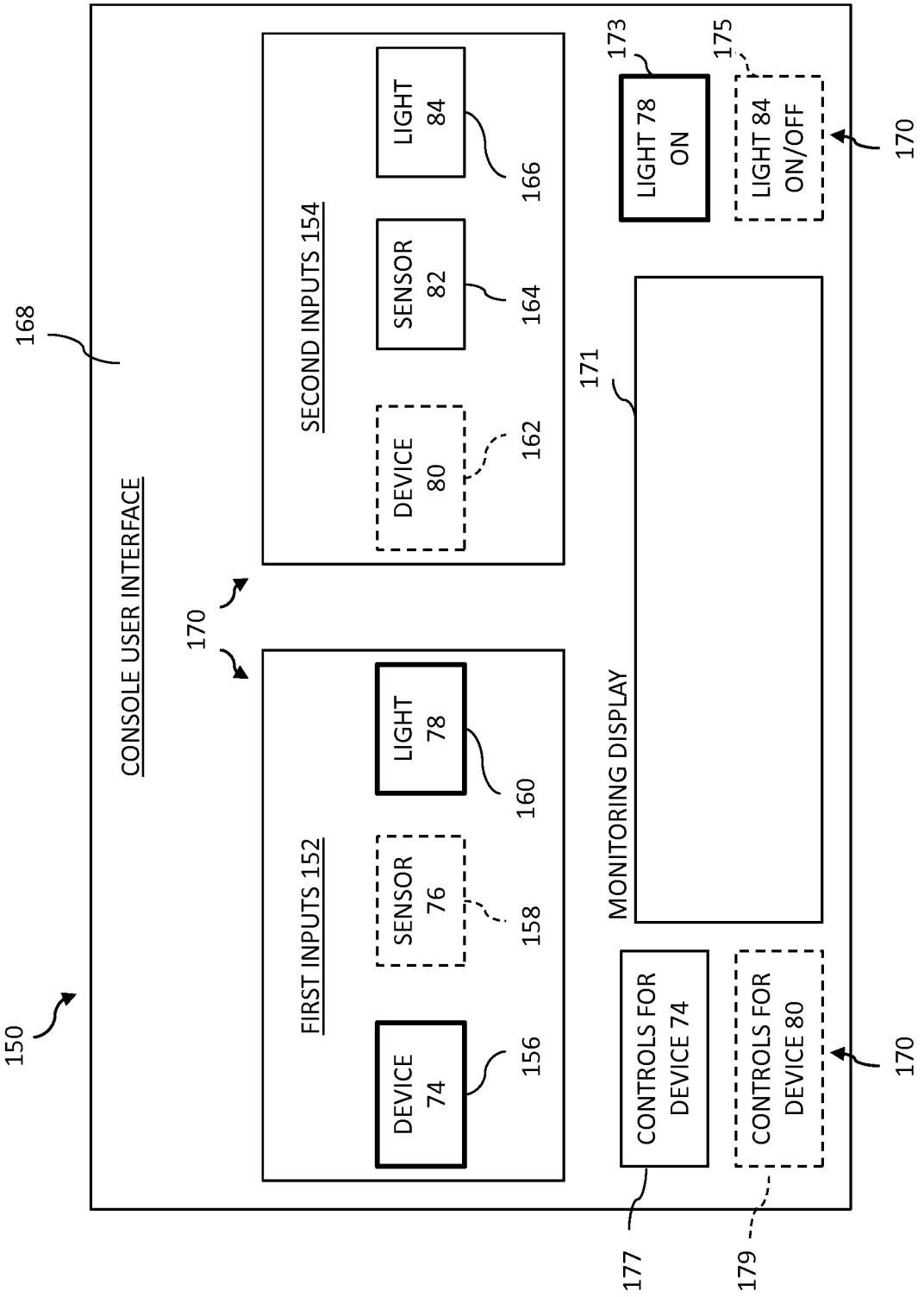
150
168
CONSOLE USER INTERFACE
170
FIRST INPUTS 152
DEVICE 74
156
SENSOR 76
158
LIGHT 78
160
SECOND INPUTS 154
DEVICE 80
162
SENSOR 82
164
LIGHT 84
166
171
MONITORING DISPLAY
CONTROLS FOR DEVICE 74
177
CONTROLS FOR DEVICE 80
179
LIGHT 78 ON
173
LIGHT 84 ON/OFF
175
170
170

FIG. 9

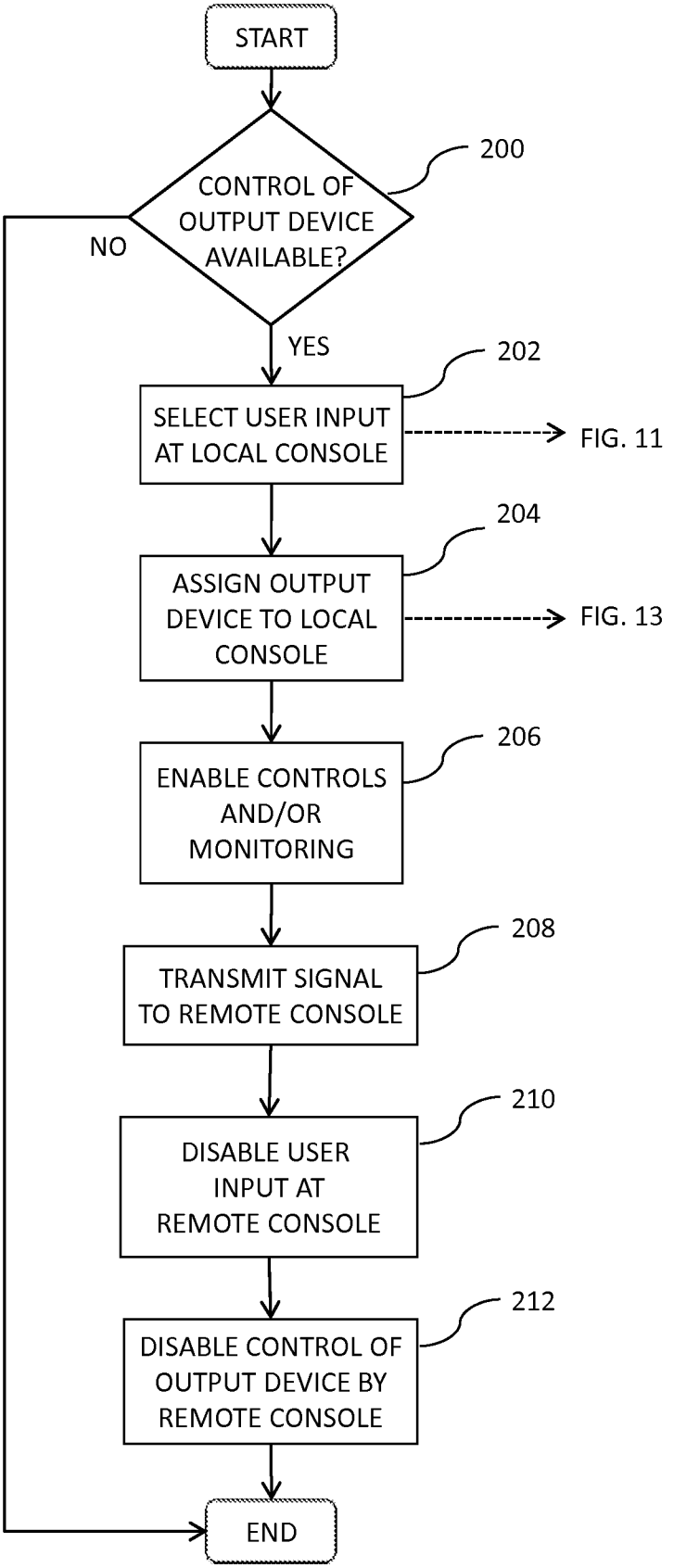
START
CONTROL OF OUTPUT DEVICE AVAILABLE?
200
NO
YES
SELECT USER INPUT AT LOCAL CONSOLE
202
FIG. 11
ASSIGN OUTPUT DEVICE TO LOCAL CONSOLE
204
FIG. 13
ENABLE CONTROLS AND/OR MONITORING
206
TRANSMIT SIGNAL TO REMOTE CONSOLE
208
DISABLE USER INPUT AT REMOTE CONSOLE
210
DISABLE CONTROL OF OUTPUT DEVICE BY REMOTE CONSOLE
212
END

FIG. 10

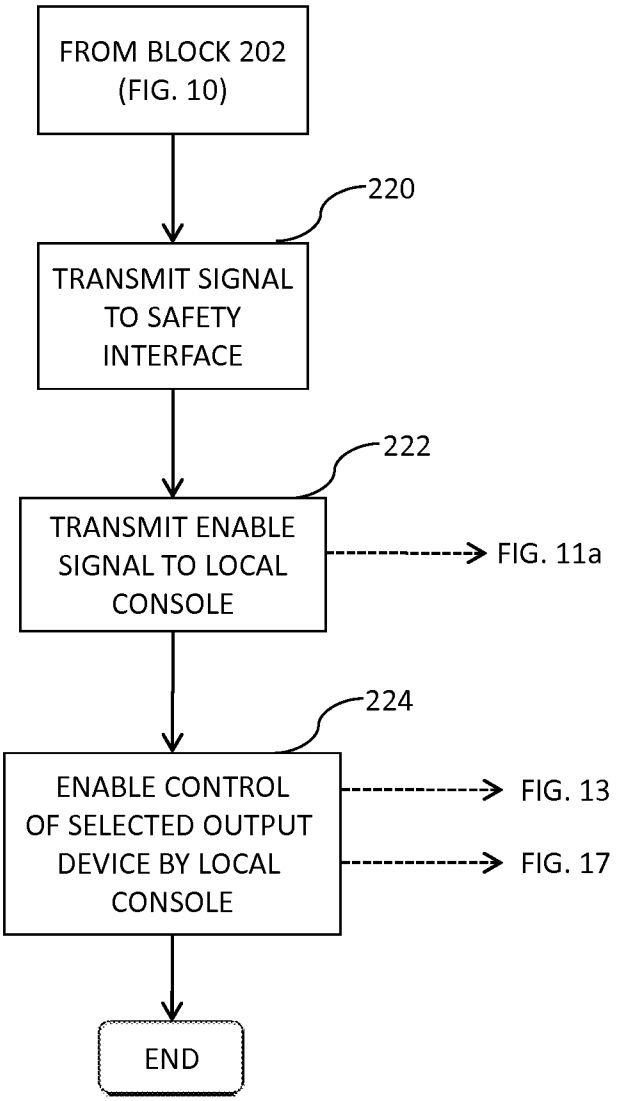
FROM BLOCK 202 (FIG. 10)
220
TRANSMIT SIGNAL TO SAFETY INTERFACE
222
TRANSMIT ENABLE SIGNAL TO LOCAL CONSOLE
FIG. 11a
224
ENABLE CONTROL OF SELECTED OUTPUT DEVICE BY LOCAL CONSOLE
FIG. 13
FIG. 17
END

FIG. 11

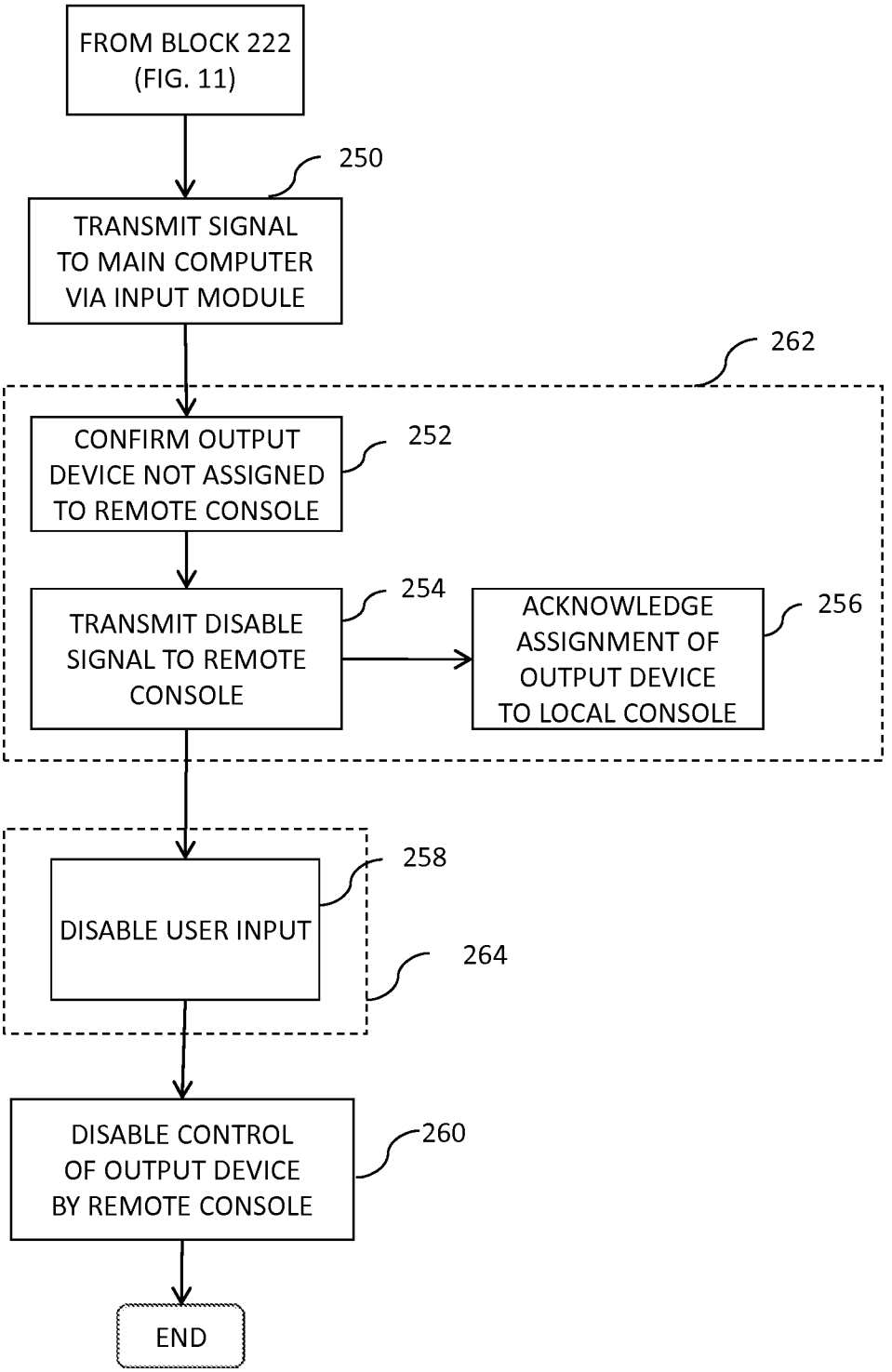
FROM BLOCK 222 (FIG. 11)
250
TRANSMIT SIGNAL TO MAIN COMPUTER VIA INPUT MODULE
262
CONFIRM OUTPUT DEVICE NOT ASSIGNED TO REMOTE CONSOLE
252
TRANSMIT DISABLE SIGNAL TO REMOTE CONSOLE
254
ACKNOWLEDGE ASSIGNMENT OF OUTPUT DEVICE TO LOCAL CONSOLE
256
DISABLE USER INPUT
258
264
DISABLE CONTROL OF OUTPUT DEVICE BY REMOTE CONSOLE
260
END

FIG. 11a

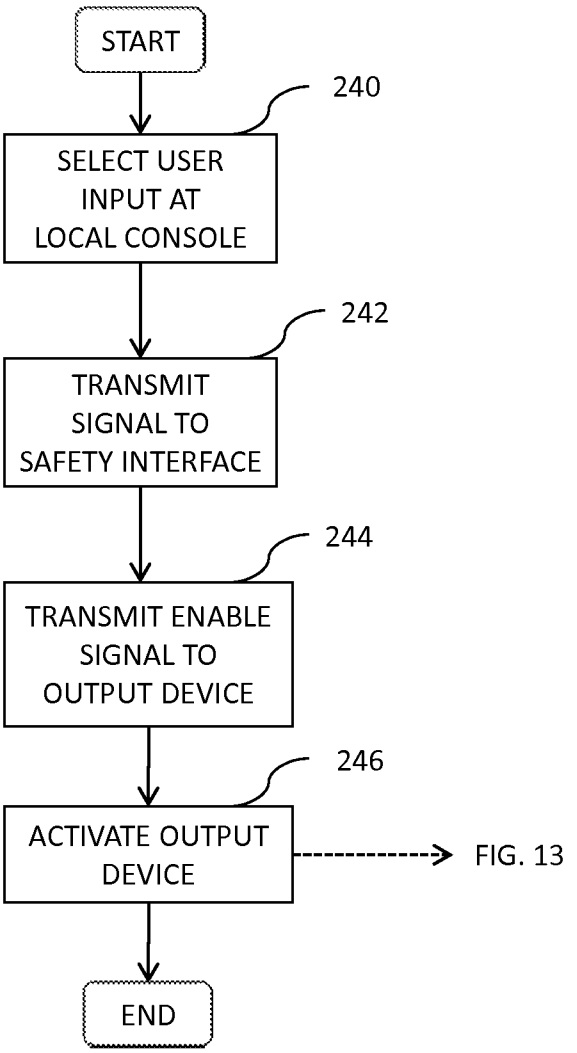
START
240
SELECT USER INPUT AT LOCAL CONSOLE
242
TRANSMIT SIGNAL TO SAFETY INTERFACE
244
TRANSMIT ENABLE SIGNAL TO OUTPUT DEVICE
246
ACTIVATE OUTPUT DEVICE
FIG. 13
END

FIG. 12

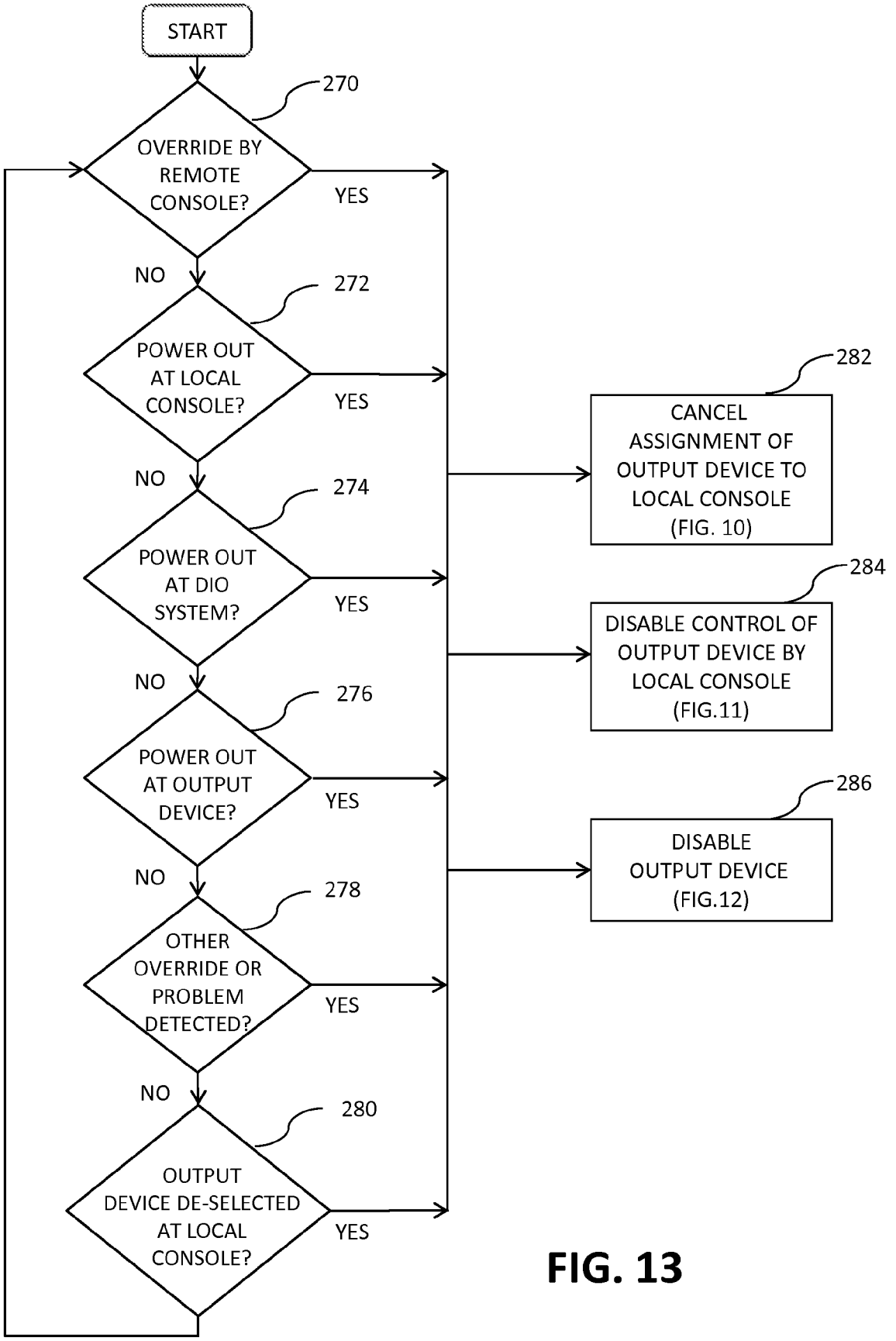
START
270
OVERRIDE BY REMOTE CONSOLE?
YES
NO
272
POWER OUT AT LOCAL CONSOLE?
YES
NO
274
POWER OUT AT DIO SYSTEM?
YES
NO
276
POWER OUT AT OUTPUT DEVICE?
YES
NO
278
OTHER OVERRIDE OR PROBLEM DETECTED?
YES
NO
280
OUTPUT DEVICE DE-SELECTED AT LOCAL CONSOLE?
YES
282
CANCEL ASSIGNMENT OF OUTPUT DEVICE TO LOCAL CONSOLE (FIG. 10)
284
DISABLE CONTROL OF OUTPUT DEVICE BY LOCAL CONSOLE (FIG.11)
286
DISABLE OUTPUT DEVICE (FIG.12)

FIG. 13

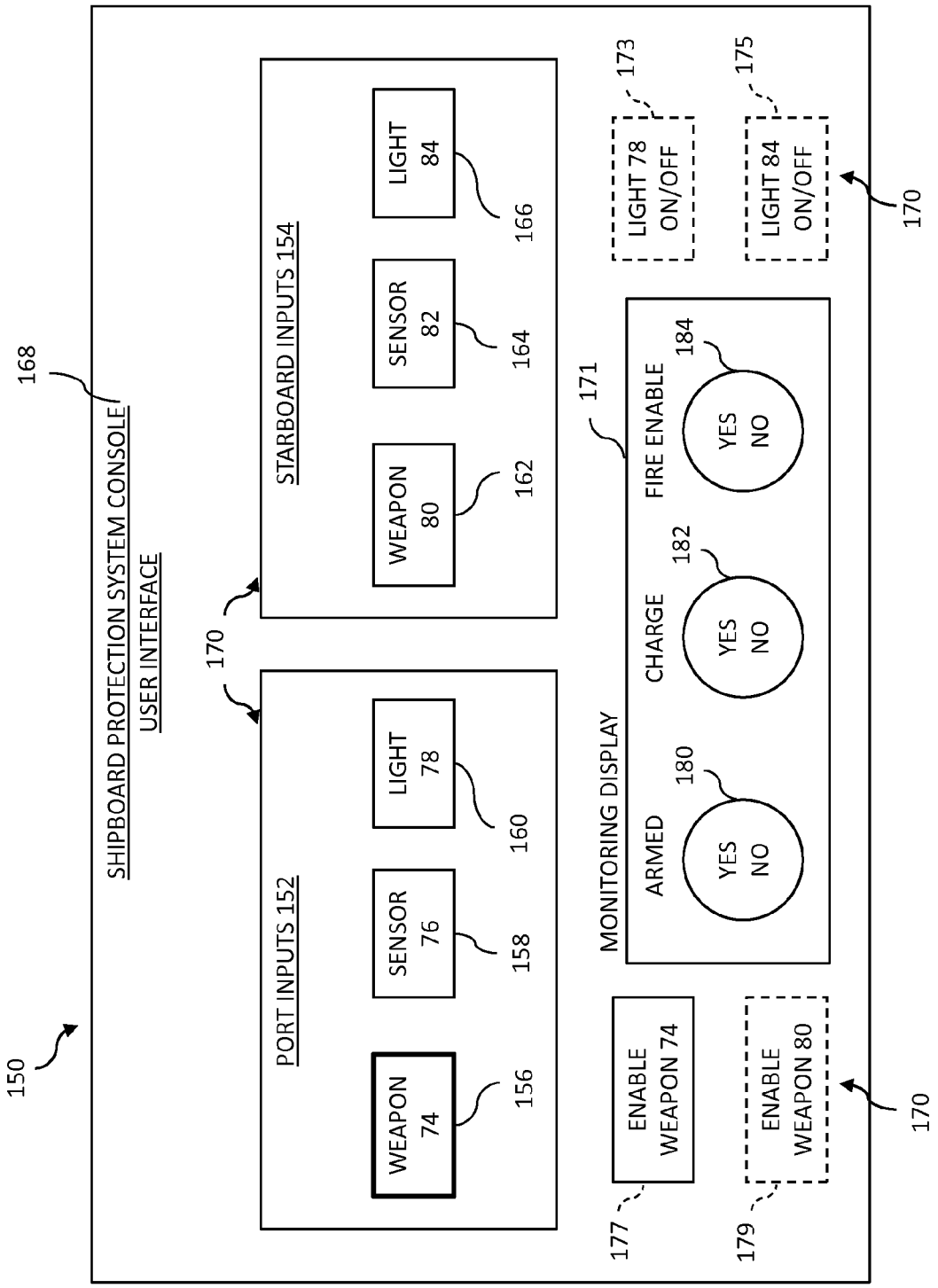
150
168
SHIPBOARD PROTECTION SYSTEM CONSOLE
USER INTERFACE
170
PORT INPUTS 152
WEAPON 74
156
SENSOR 76
158
LIGHT 78
160
STARBOARD INPUTS 154
WEAPON 80
162
SENSOR 82
164
LIGHT 84
166
171
MONITORING DISPLAY
ARMED
180
YES
NO
CHARGE
182
YES
NO
FIRE ENABLE
184
YES
NO
ENABLE WEAPON 74
177
ENABLE WEAPON 80
179
LIGHT 78 ON/OFF
173
LIGHT 84 ON/OFF
175
170
170

FIG. 14

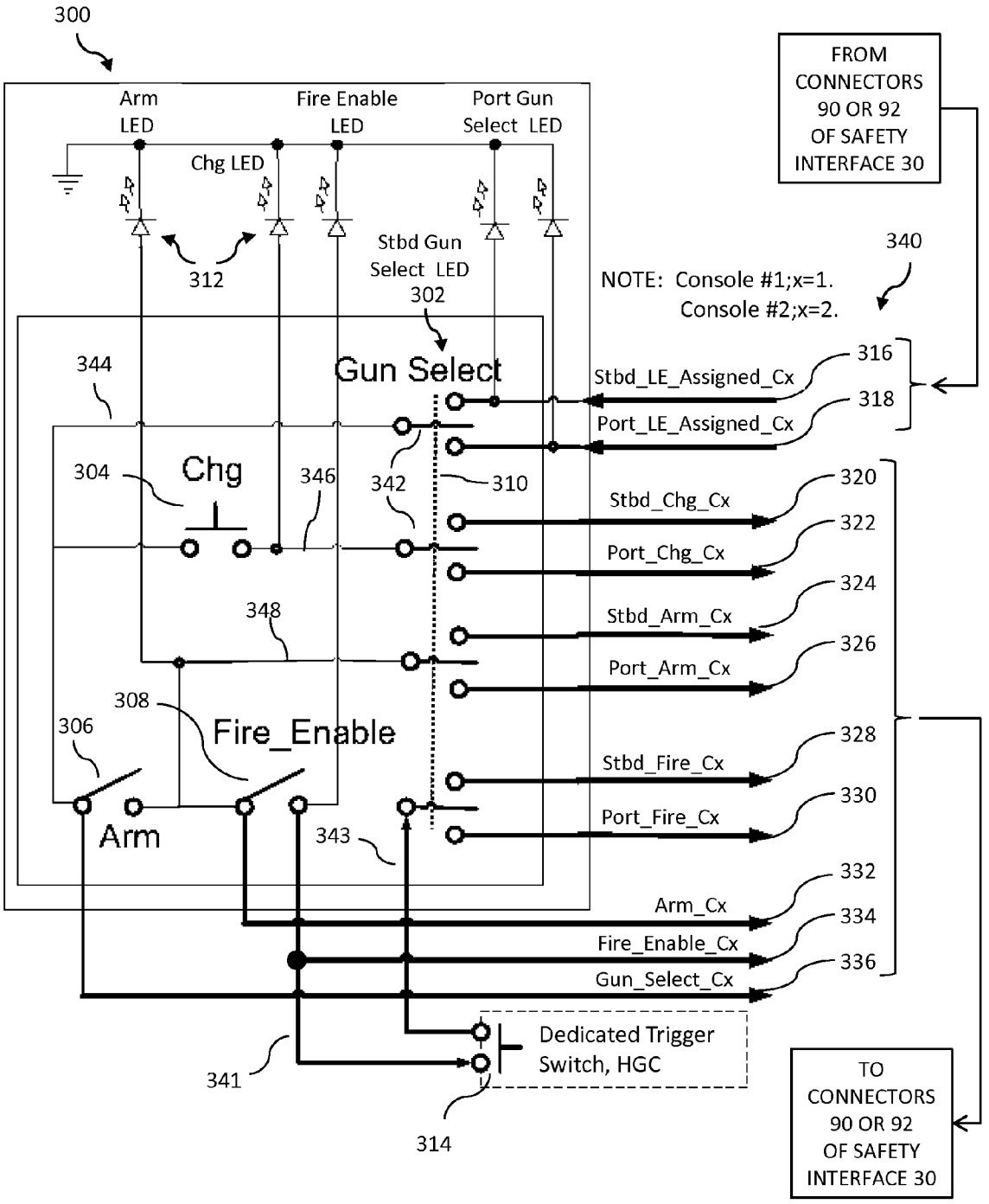
300
Arm LED
Fire Enable LED
Port Gun Select LED
Chg LED
Stbd Gun Select LED
302
312
FROM CONNECTORS 90 OR 92 OF SAFETY INTERFACE 30
340
NOTE: Console #1;x=1.
Console #2;x=2.
344
Gun Select
316
Stbd_LE_Assigned_Cx
318
Port_LE_Assigned_Cx
304
Chg
346
342
310
320
Stbd_Chg_Cx
322
Port_Chg_Cx
348
324
Stbd_Arm_Cx
326
Port_Arm_Cx
308
306
Fire_Enable
328
Stbd_Fire_Cx
330
Port_Fire_Cx
Arm
343
332
Arm_Cx
334
Fire_Enable_Cx
336
Gun_Select_Cx
Dedicated Trigger Switch, HGC
341
314
TO CONNECTORS 90 OR 92 OF SAFETY INTERFACE 30

FIG. 15

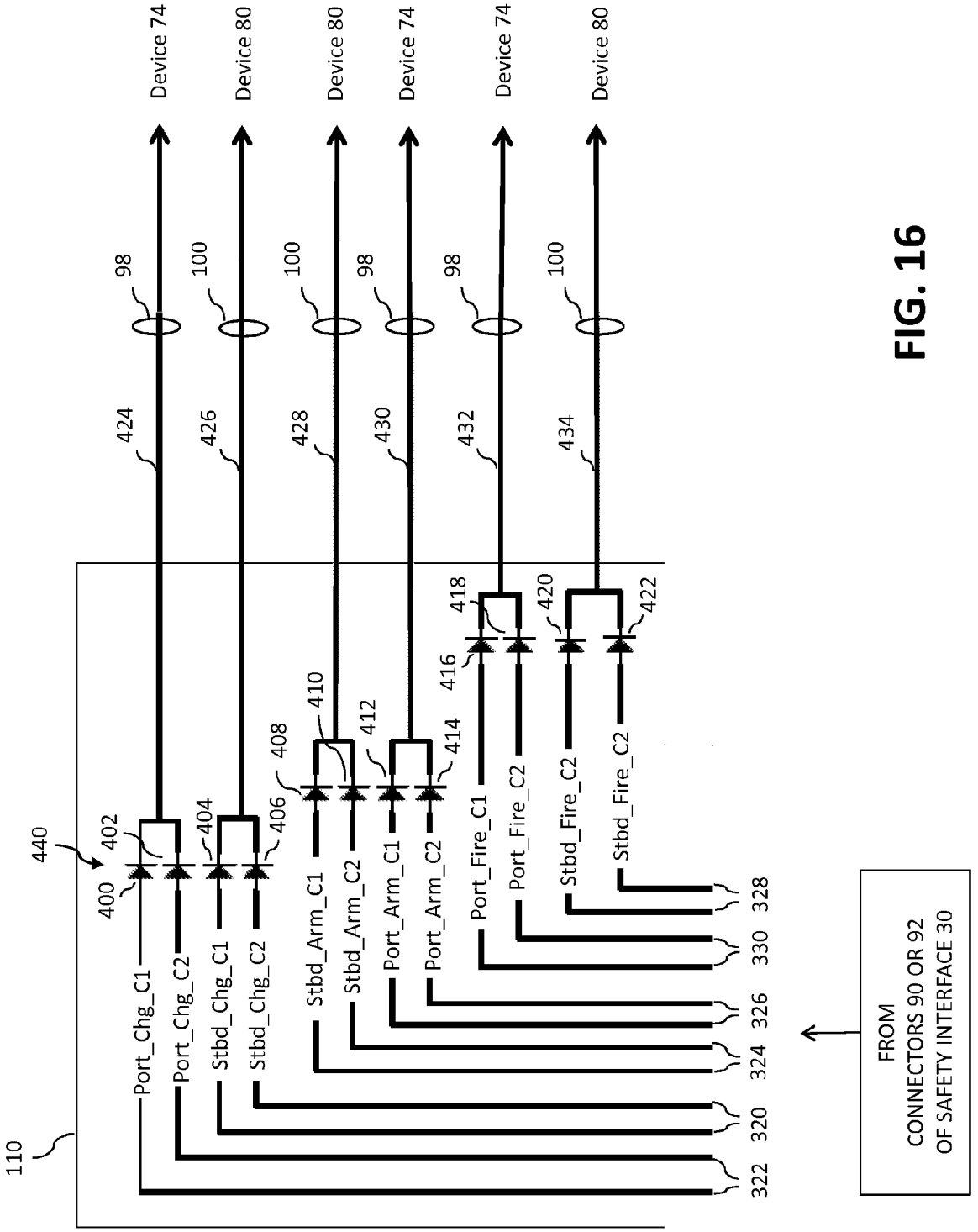
Device 74
Device 80
Device 80
Device 74
Device 74
Device 80
98
100
100
98
98
100
424
426
428
430
432
434
418
420
422
416
410
412
408
414
406
404
402
400
440
110
Port_Chg_C1
Port_Chg_C2
Stbd_Chg_C1
Stbd_Chg_C2
Stbd_Arm_C1
Stbd_Arm_C2
Port_Arm_C1
Port_Arm_C2
Port_Fire_C1
Port_Fire_C2
Stbd_Fire_C2
Stbd_Fire_C2
322
320
324
326
330
328
FROM
CONNECTORS 90 OR 92
OF SAFETY INTERFACE 30

FIG. 16

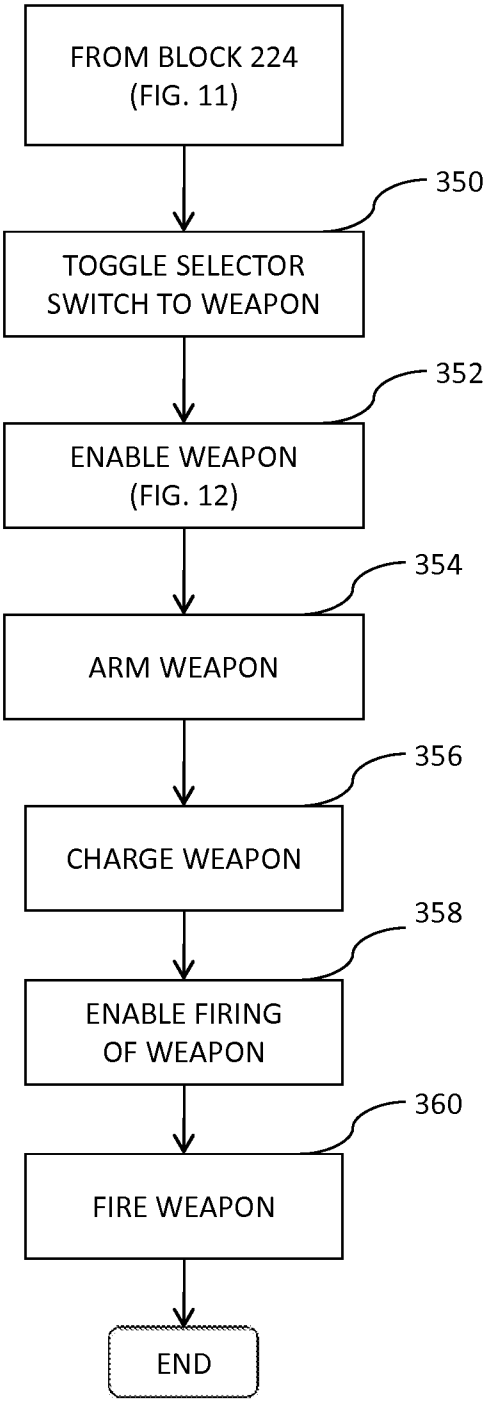
FROM BLOCK 224
(FIG. 11)
350
TOGGLE SELECTOR
SWITCH TO WEAPON
352
ENABLE WEAPON
(FIG. 12)
354
ARM WEAPON
356
CHARGE WEAPON
358
ENABLE FIRING
OF WEAPON
360
FIRE WEAPON
END

FIG. 17

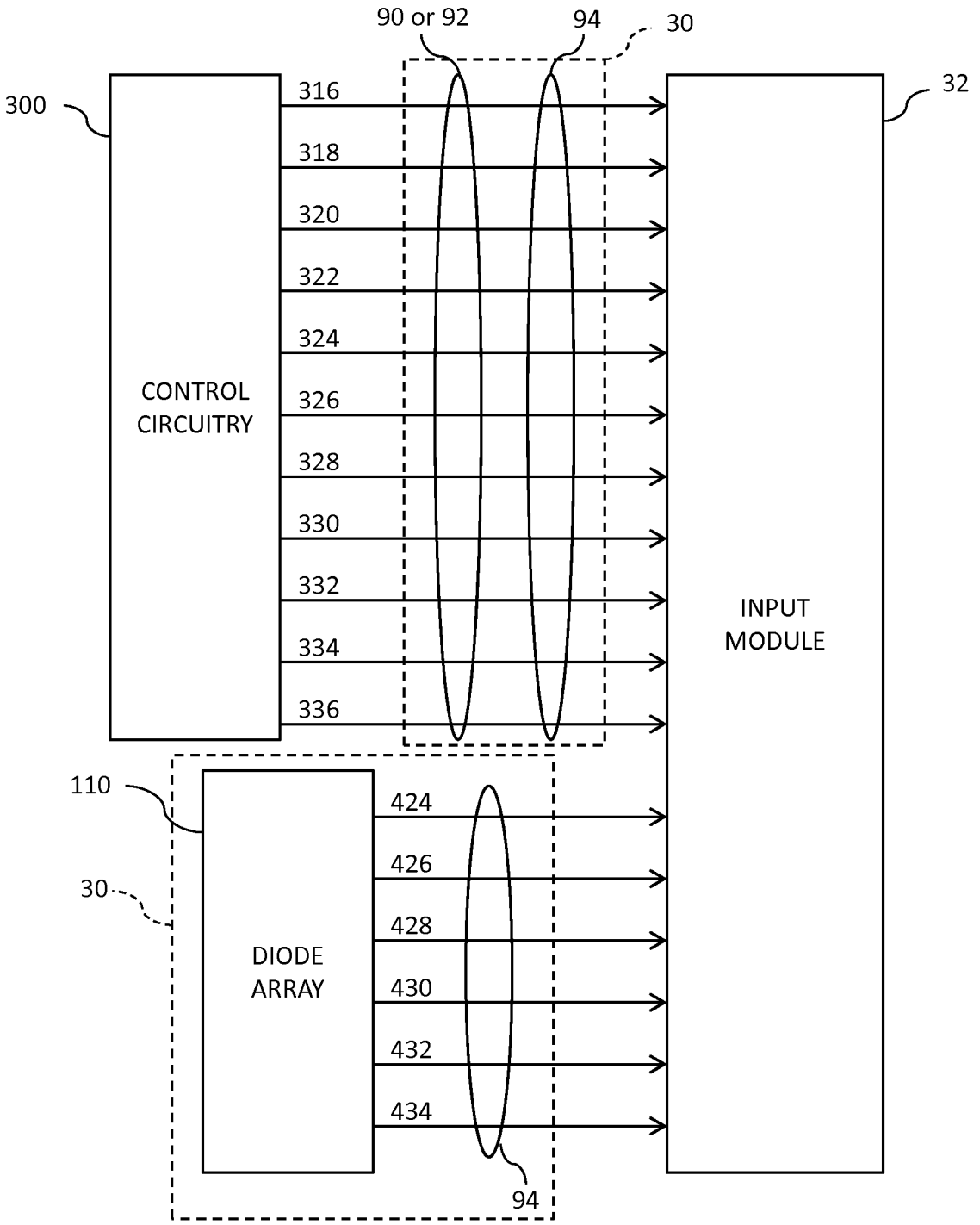
90 or 92
94
30
300
32
316
318
320
322
324
326
328
330
332
334
336
CONTROL CIRCUITRY
INPUT MODULE
110
30
424
426
428
430
432
434
DIODE ARRAY
94

FIG. 18

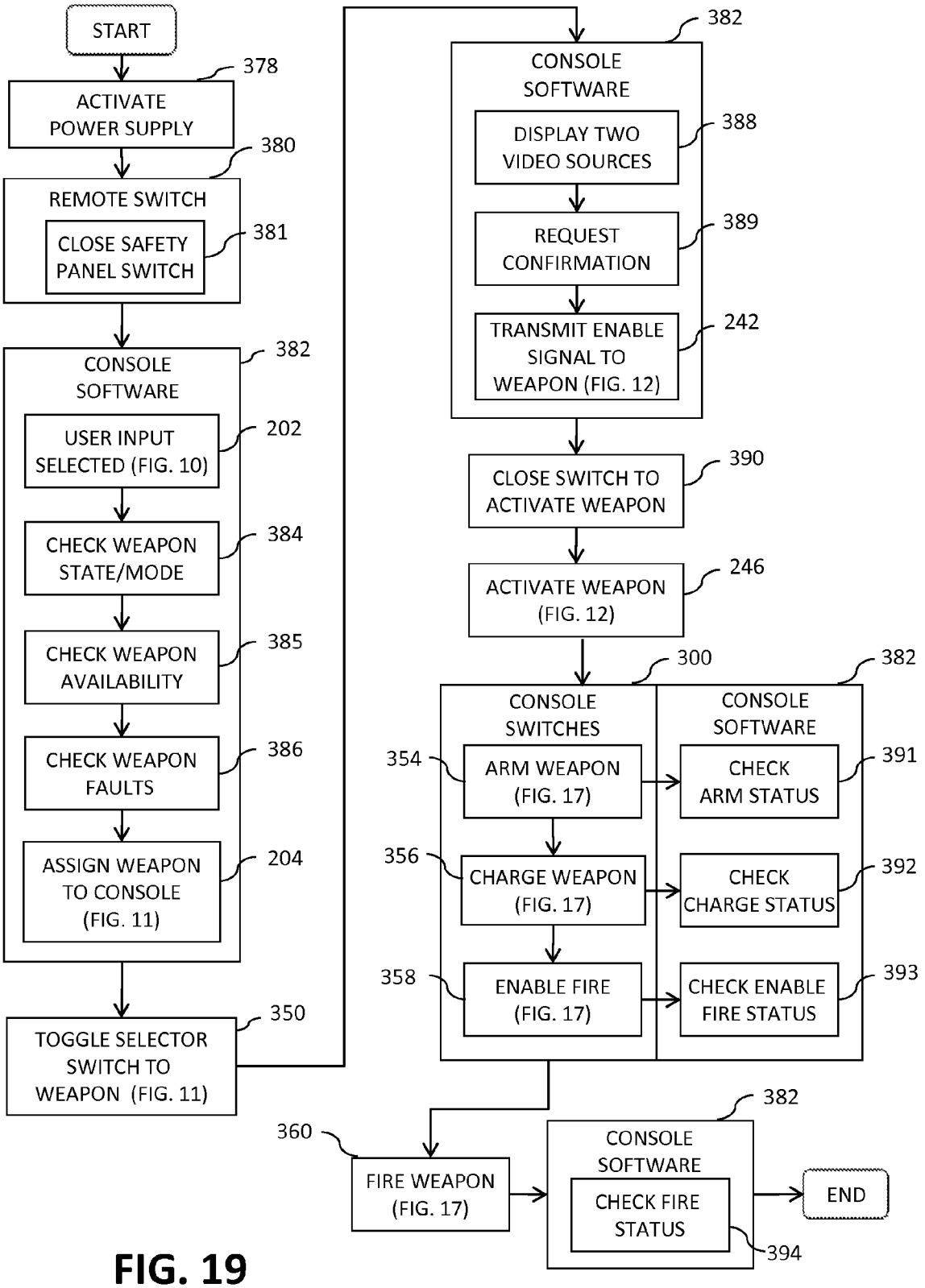
START
ACTIVATE POWER SUPPLY
378
REMOTE SWITCH
380
CLOSE SAFETY PANEL SWITCH
381
CONSOLE SOFTWARE
382
USER INPUT SELECTED (FIG. 10)
202
CHECK WEAPON STATE/MODE
384
CHECK WEAPON AVAILABILITY
385
CHECK WEAPON FAULTS
386
ASSIGN WEAPON TO CONSOLE (FIG. 11)
204
TOGGLE SELECTOR SWITCH TO WEAPON (FIG. 11)
350
CONSOLE SOFTWARE
382
DISPLAY TWO VIDEO SOURCES
388
REQUEST CONFIRMATION
389
TRANSMIT ENABLE SIGNAL TO WEAPON (FIG. 12)
242
CLOSE SWITCH TO ACTIVATE WEAPON
390
ACTIVATE WEAPON (FIG. 12)
246
CONSOLE SWITCHES
300
CONSOLE SOFTWARE
382
354
ARM WEAPON (FIG. 17)
CHECK ARM STATUS
391
356
CHARGE WEAPON (FIG. 17)
CHECK CHARGE STATUS
392
358
ENABLE FIRE (FIG. 17)
CHECK ENABLE FIRE STATUS
393
360
FIRE WEAPON (FIG. 17)
CONSOLE SOFTWARE
382
CHECK FIRE STATUS
394
END

FIG. 19

SYSTEM AND METHOD FOR COORDINATING CONTROL OF AN OUTPUT DEVICE BY MULTIPLE CONTROL CONSOLES

STATEMENT REGARDING FEDERALLY SPONSORED RESEARCH OR DEVELOPMENT

The invention described herein was made in the performance of official duties by employees of the Department of the Navy and may be manufactured, used, licensed by or for the United States Government for any governmental purpose without payment of any royalties thereon.

CROSS-REFERENCE TO RELATED APPLICATION

This application is related to co-pending patent application Ser. No. 12/723,140 entitled "Interface Device for Coordinating Control of an Output Device by Multiple Control Consoles", filed on Mar. 12, 2010, the disclosure of which is expressly incorporated by reference herein.

BACKGROUND AND SUMMARY

The present disclosure relates generally to a system and method for coordinating or interfacing multiple input devices with at least one output device. More particularly, the present disclosure relates to an input/output system which provides a localized interface between multiple operator control consoles and at least one output device to coordinate and monitor the operation of the at least one output device.

In some control systems, multiple operator consoles are used to control and monitor one or more output devices. In such a system, each operator console may be configured to transmit control signals to the output devices at any given time. As a result, conflicting control signals from the operator consoles may be received by the output devices, resulting in an unwanted response by an output device or a fault state by the control system. In addition, troubleshooting such control systems may be difficult if the nodes on the control system, including the operator consoles and the output devices, are physically remote from each other.

According to one illustrated embodiment of the present disclosure, a system for coordinating control of an output device by a plurality of different operators comprises a first control console having at least one device selection input to select at least one output device for control by the first control console and at least one device control input to control operation of at least one selected output device from the first control console, and a second control console spaced apart from the first control console. The second control console also has at least one device selection input to select at least one output device for control by the second control console and at least one device control input to control operation of at least one selected output device from the second control console. The system also includes an input/output control system coupled to the first and second control consoles and to the at least one output device. The input/output control system is configured to receive signals from the device selection inputs and the device control inputs of the first and second control consoles. In response to receipt of a device selection input signal for a selected output device from the first control console before receipt of a device selection input signal corresponding to the same selected device from the second control console, the input/output control system enables a device control input of the first control console corresponding to the selected device and disables the device selection input of the second control console corresponding to the selected device. In response to receipt of a device selection input signal for the selected output device from the second control console before receipt of a device selection input corresponding to the same selected device from the first control console, the input/output control system enables a device control input of the second control console corresponding to the selected device and disables the device selection input of the first control console corresponding to the selected device.

In one illustrated embodiment, the device control inputs of the first and second control consoles include a first control input to activate the selected output device from the first and second control consoles and a second control input to control operation of the activated selected output device from the first and second control consoles. In one illustrated embodiment, the input/output control system is configured to automatically send an activation signal from the input/output system to the selected output device in response to receipt of a signal from a first control input, thereby permitting control of the activated output device by a corresponding second control input. In another illustrated embodiment, the input/output control system is configured to receive signals from the first and second control inputs of the first and second control consoles, the input/output control system being configured to transmit signals to the selected output device to activate and control the selected output device in response to the signals from the first and second control inputs, respectively.

In one illustrated embodiment, the first and second control consoles each include a display to monitor operation of the at least one output device. In another illustrated embodiment, in response to receipt of a device selection input signal for a selected output device from the first control console before receipt of a device selection input signal corresponding to the same selected device from the second control console, the input/output control system enables monitoring of the selected device on the display of the first control console and disables monitoring of the selected device on the display of the second control console. In response to receipt of a device selection input signal for the selected output device from the second control console before receipt of a device selection input corresponding to the same selected device from the first control console, the input/output control system enables monitoring of the selected device on the display of the second control console and disables monitoring of the selected device on the display of the first control console.

According to another illustrated embodiment of the present disclosure, a method for coordinating control of an output device by a plurality of different operators comprises providing a first control console having at least one device selection input to select at least one output device for control by the first control console and at least one device control input to control operation of at least one selected output device from the first control console, and providing a second control console spaced apart from the first control console. The second control console also has at least one device selection input to select at least one output device for control by the second control console and at least one device control input to control operation of at least one selected output device from the second control console. The method further comprises enabling a device control input of the first control console corresponding to a selected device and disabling the device selection input of the second control console corresponding to the selected device in response to receipt of a device selection input signal for the selected output device from the first control console before receipt of a device selection input signal corresponding to the same selected device from the

second control console, and enabling a device control input of the second control console corresponding to the selected device and disabling the device selection input corresponding to the selected device on the first control console in response to receipt of a device selection input signal for the selected output device from the second control console before receipt of a device selection input corresponding to the same selected device from the first control console.

According to another illustrated embodiment of the present disclosure, a system for coordinating control of an output device by a plurality of different operators comprises a first control console having at least one device selection input to select at least one output device for control by the first control console and at least one device control input to control operation of at least one selected output device from the first control console. A second control console spaced apart from the first control console also has at least one device selection input to select at least one output device for control by the second control console and at least one device control input to control operation of at least one selected output device from the second control console. The system further includes a means coupled to the first and second control consoles and to the at least one output device for receiving signals from the device selection inputs and the device control inputs of the first and second control consoles. The system further includes a means for enabling a device control input of the first control console corresponding to the selected device and for disabling the device selection input of the second control console corresponding to the selected device in response to receipt of a device selection input signal for a selected output device from the first control console before receipt of a device selection input signal corresponding to the same selected device from the second control console. The system further includes a means for enabling a device control input of the second control console corresponding to the selected device and for disabling the device selection input of the first control console corresponding to the selected device in response to receipt of a device selection input signal for the selected output device from the second control console before receipt of a device selection input corresponding to the same selected device from the first control console.

According to one illustrated embodiment of the present disclosure, an interface device is configured to coordinate control of at least one output device by a control system including first and second control consoles. The interface device comprises a circuit board having a plurality of conductive pathways, and first and second connectors coupled to the circuit board. The first and second connectors each include a plurality of pins coupled to selected conductive pathways of the circuit board to provide a communication link to the first and second control consoles, respectively. The interface device also includes a third connector coupled to the circuit board and a plurality of switches mounted to the circuit board. The third connector includes a plurality of pins coupled to selected conductive pathways of the circuit board to provide a communication link to the output device, and each switch is coupled to at least one conductive pathway of the circuit board to electrically couple the switches to at least one of the first, second and third connectors. The first and second connectors receive signals from at least one device selection input and at least one device control input of the first and second control consoles, respectively. In response to receipt of a device selection input signal for a selected output device from the first control console before receipt of a device selection input signal corresponding to the same selected output device from the second control console, at least one of the plurality of switches enables the at least one device control input of the first control console corresponding to the selected device. In response to receipt of a device selection input signal for the selected output device from the second control console before receipt of a device selection input corresponding to the same selected output device from the first control console, at least one of the plurality of switches enables the at least one device control input of the second control console corresponding to the selected device.

In an illustrated embodiment, the control system further includes a communication network and an output module coupled to the communication network and configured to receive network signals from the first and second control consoles over the communication network. The interface device further includes a fourth connector coupled to the circuit board. The fourth connector includes a plurality of pins coupled to selected conductive pathways of the circuit board to provide a communication link to the output module. The output module transmits the device selection input signals for a selected output device received from the first and second control consoles to the fourth connector to trigger the at least one switch to enable the respective device control input.

According to one illustrated embodiment of the present disclosure, an interface device is configured to coordinate control of at least one an output device by a control system including first and second control consoles. The interface device comprises a circuit board having a plurality of conductive pathways, and first and second connectors coupled to the circuit board. The first and second connectors each include a plurality of pins coupled to selected conductive pathways of the circuit board to provide a communication link to the first and second control consoles, respectively. The interface device also includes a third connector coupled to the circuit board, and a plurality of switches mounted to the circuit board. The third connector includes a plurality of pins coupled to selected conductive pathways of the circuit board to provide a communication link to the output device. Each switch is coupled to at least one conductive pathway of the circuit board to electrically couple the switches to at least one of the first, second and third connectors. The first and second connectors receive first control signals from inputs of the first and second control consoles to activate a selected output device and second control signals from inputs of the first and second control consoles to control operation of the activated selected output device. At least one of the switches coupled to the third connector is configured to automatically send an activation signal to the selected output device in response to receipt of a first control signal, thereby permitting control of the activated output device by a second control signal also sent through the third connector to the selected output device.

According to yet another illustrated embodiment of the present disclosure, a method of coordinating control of at least one output device by a control system including first and second control consoles includes providing an interface device comprising a circuit board having a plurality of conductive pathways, first, second and third connectors coupled to the circuit board, the first, second and third connectors each including a plurality of pins coupled to selected conductive pathways of the circuit board, and a plurality of switches coupled to the circuit board, each switch being coupled to at least one conductive pathway of the circuit board to electrically couple the switches to at least one of the first, second and third connectors. In one illustrated embodiment, the method also includes using the interface device to coordinate control of the at least one an output device by the first and second control consoles by: electrically coupling the first and second connectors to the first and second control consoles, respec-

tively, to provide a communication link between the interface device and the first and second control consoles; electrically coupling the output device to the third connector to provide a communication link between the interface device and the output device; using at least one of the plurality of switches to enable at least one device control input of the first control console corresponding to a selected output device in response to receipt of a device selection input signal for the selected output device from the first control console before receipt of a device selection input signal corresponding to the same selected output device from the second control console; and using at least one other of the plurality of switches to enable at least one device control input of the second control console corresponding to a selected output device in response to receipt of a device selection input signal for the selected output device from the second control console before receipt of a device selection input signal corresponding to the same selected output device from the first control console.

In another illustrated embodiment, the method includes using the interface device to coordinate control of the at least one an output device by the first and second control consoles by: electrically coupling the first and second connectors to the first and second control consoles, respectively, to provide a communication link between the interface device and the first and second control consoles so that the first and second connectors receive first control signals from inputs of the first and second control consoles to activate a selected output device and a second control signals from inputs of the first and second control consoles to control operation of the activated selected output device; electrically coupling the output device to the third connector to provide a communication link between the interface device and the output device; using at least one of the switches coupled to the third connector to automatically send an activation signal to the selected output device in response to receipt of a first control signal; and controlling the activated output device with a second control signal also sent through the third connector to the selected output device.

Additional features and advantages of the present invention will become apparent to those skilled in the art upon consideration of the following detailed description of the illustrative embodiment exemplifying the best mode of carrying out the invention as presently perceived.

BRIEF DESCRIPTION OF THE DRAWINGS

The foregoing aspects and many of the attendant advantages of this invention will become more readily appreciated as the same become better understood by reference to the following detailed description when taken in conjunction with the accompanying drawings.

FIG. **1** is a block diagram illustrating a control system of the present disclosure wherein an input/output system coordinates communication between a plurality of operator control consoles and at least one output device;

FIG. **2** is a block diagram illustrating one embodiment of the control system of FIG. **1** wherein a digital input/output system includes a safety interface, an input module, an output module, and a network module;

FIGS. **3** and **4** illustrate an exemplary network module of the digital input/output system of FIG. **2**;

FIG. **5** is a block diagram illustrating one embodiment of the safety interface of FIG. **2**;

FIGS. **6** and **7** are block diagrams illustrating a safety interface in communication with the output module, operator consoles, and output devices of the control system of FIG. **2**;

FIGS. **8** and **9** illustrate an exemplary user interface of an operator control console of the present disclosure;

FIG. **10** is a flowchart illustrating steps for assigning control of an output device to an operator console;

FIG. **11** is a flowchart illustrating steps for enabling control of an output device at an operator console;

FIG. **11***a* is a flowchart illustrating steps for disabling the control of an output device by a remote operator console;

FIG. **12** is a flowchart illustrating steps for enabling an output device from an operator console;

FIG. **13** is a flowchart illustrating steps for disabling control of or deactivating an output device;

FIG. **14** illustrates an exemplary user interface of an operator console of the present disclosure;

FIG. **15** illustrates exemplary control circuitry of an operator console of the present disclosure;

FIG. **16** illustrates an exemplary diode array of the safety interface of FIG. **5**;

FIG. **17** is a flowchart illustrating a weapon firing sequence in accordance with one embodiment of the digital input/output system of the present disclosure;

FIG. **18** is a block diagram illustrating exemplary inputs to the input module of FIG. **2** in accordance with one embodiment of the present disclosure; and

FIG. **19** is a flowchart illustrating a weapon firing sequence in accordance with one embodiment of the digital input/output system of the present disclosure.

Corresponding reference characters indicate corresponding parts throughout the several views. Although the drawings represent embodiments of various features and components in the present disclosure, the drawings are not necessarily to scale and certain features may be exaggerated in order to better illustrate and explain the present disclosure. The exemplification set out herein illustrates embodiments of the disclosure, and such exemplifications are not to be construed as limiting the scope of the invention in any manner.

DETAILED DESCRIPTION OF THE DRAWINGS

For the purposes of promoting an understanding of the principles of the invention, reference will now be made to the embodiments illustrated in the drawings, which are described below. The embodiments disclosed below are not intended to be exhaustive or limit the invention to the precise form disclosed in the following detailed description. Rather, the embodiments are chosen and described so that others skilled in the art may utilize their teachings. It will be understood that no limitation of the scope of the invention is thereby intended. The invention includes any alterations and further modifications in the illustrated devices and described methods and further applications of the principles of the invention which would normally occur to one skilled in the art to which the invention relates.

Referring initially to FIG. **1**, a control system **12** including an input/output system **10** of the present disclosure is shown. Control system **12** may be implemented in a variety of applications, including a vehicle, a manufacturing facility to control industrial equipment, military applications, or any other suitable application. In one illustrated embodiment, control system **12** is implemented as a protection system on a vessel or ship for conducting surveillance and evaluating and responding to identified threats to the vessel. One exemplary protection system that may utilize control system **12** is described in U.S. Pat. No. 6,903,676, which is expressly incorporated by reference herein.

Control system **12** illustratively includes a plurality of operator control consoles **14** and a plurality of devices **20** in

communication with input/output system **10**. Control system **12** illustratively includes at least two operator consoles **14** and at least one device **20**. Input/output system **10** illustratively interfaces each operator console **14** and each device **20** to coordinate, monitor, and manage communication therebetween. In one embodiment, consoles **14** and devices **20** are hard-wired to input/output system **10**, although wireless communication may alternatively be used. A user interface **150** (see FIG. **2**), including an interactive graphical display **168** (see FIG. **8**), is illustratively provided at each operator console **14**. The user interface **150** receives user inputs and allows operators to manipulate and monitor devices **20**. In one embodiment, user interface **150** of each operator console **14** includes a touchscreen, although a keypad, mouse, touchpad, trackball, keyboard, or any other suitable input device may also be used. User interface **150** also may include one or more of the following: an information display, a video display providing video from a video input source, and a hand controller. Devices **20** may be any suitable output or control able devices or may be subsystems of control system **12**.

Input/output system **10** includes a main computer or server **28** communicatively coupled to operator consoles **14**. In one embodiment, input/output system **10** is a digital input/output system. Communication between nodes on control system **12** may be monitored at a remote location via server **28**. In the illustrated embodiment, operator consoles **14** communicate with server **28** over a communication network **29**, illustratively a local area network such as Ethernet. In one embodiment, devices **20** may also communicate directly with server **28** over communication network **29**. In one embodiment, devices **20** may also communicate with operator consoles **14** via serial communication, such as for transmitting feedback signals to operator consoles **14** for monitoring purposes.

Referring to FIG. **2**, an illustrated embodiment of control system **12** is shown. In FIG. **2** and as described herein, devices **20** of FIG. **1** may illustratively include devices **74** and **80**, sensors **76** and **82**, and lights **78** and **84** (collectively output devices **20**). A primary console **70** and a secondary console **72** illustratively correspond to operator consoles **14** of FIG. **1**. While two operator consoles **70** and **72** are described herein, any desired number of operator consoles may be used. Devices **74** and **80** are illustratively any output or control devices configured to be controlled and/or monitored by primary and secondary consoles **70** and **72**. In one embodiment, lights **78** and **84** are each mounted to a light holding apparatus, such as a gimbal mechanism (not shown). Sensors **76** and **82** are any sensors or transducers configured to provide feedback to the operator consoles **70**, **72**. In one embodiment, sensors **76** and **82** are electro-optical sensors configured to provide detection, surveillance, and/or tracking capabilities. In one illustrated embodiment, sensors **76** and **82** each include a video camera providing video and/or data feedback to consoles **70** and **72**. In another embodiment, each sensor **76** and **82** comprises a plurality of cameras, including infrared or thermal, laser, and/or standard video cameras, mounted on a turret unit and configured to provide multiple camera feedback signals for display on consoles **70** and **72**. While six output devices **20** are shown in FIG. **2** and described herein for illustrative purposes, any desired number of output devices **20** may be used.

Primary console **70** and secondary console **72** each include a user interface **150** configured to provide controls and monitoring capability for each output device **20**. Primary and secondary consoles **70** and **72** also illustratively each include control circuitry **300** for controlling devices **74** and **80**. In one embodiment, control circuitry **300** includes a plurality of switches which, upon engagement by a user, transmit control signals to devices **74** and **80**. In the illustrated embodiment, primary and secondary consoles **70** and **72** have identical controls and functionality but are physically remote from each other, for example in different or remote areas of the control system environment. Alternatively, consoles **70** and **72** may be located near each other in the control system environment.

In the illustrative embodiment of FIG. **2**, input/output system **10** of FIG. **1** is a digital input/output (DIO) system **10**. The controls communicated by user interface **150** and control circuitry **300** at consoles **70**, **72** are coordinated, monitored, and managed by DIO system **10**. In particular, DIO system **10** coordinates assigning and enabling control of output devices **20** to consoles **70**, **72**. In addition, DIO system **10** coordinates the activation of output devices **20** by consoles **70**, **72** and reduces the likelihood of the receipt of conflicting commands by devices **20** and/or consoles **70**, **72**.

Referring still to FIG. **2**, DIO system **10** includes an interface circuit or safety interface **30**, an input module **32**, an output module **34**, and a network module **36**. Network module **36** is illustratively an Ethernet module, shown in FIGS. **3** and **4**, configured to communicate signals to and from server **28** over communication network **29**, although other suitable network modules providing other communication protocols may be used. An exemplary Ethernet network module **36** is a National Instruments cFP-1804 module. Input and output modules **32** and **34** communicate with network module **36** over a communication bus **33**. Exemplary input and output modules **32** and **34** are National Instruments cFP-DI-304 and National Instruments cFP-DO-401, respectively, although other suitable input/output modules may be used. Input and output modules **32** and **34** each include a power supply, such as power supply **120** of output module **34** illustrated in FIGS. **6** and **7**. An exemplary power supply is a National Instruments PS-2 24 VDC power supply.

Input module **32** and output module **34** are configured to communicate with various nodes in control system **12**. Input and output modules **32**, **34** are illustratively digital modules for communicating digital signals, but may alternatively be analog modules. In the illustrated embodiment, input module **32** is configured to receive digital signals from primary and secondary consoles **70**, **72** and safety interface **30** and, in response, communicate corresponding Ethernet signals to server **28** via network module **36**. Similarly, output module **34** is configured to receive Ethernet signals transmitted from consoles **70**, **72** and through server **28** over communication network **29** and, in response, to transmit corresponding digital signals to safety interface **30**. Although not shown in FIG. **2**, output devices **20** may also communicate directly with input and output modules **32**, **34**. In one embodiment, consoles **70**, **72** are hardwired to input module **32**, and safety interface **30** is hardwired to both input module **32** and output module **34**, although wireless communication may alternatively be used.

Referring to FIGS. **3** and **4**, an exemplary network module **36** illustratively includes an Ethernet port **52** configured to connect input and output modules **32**, **34** to server **28** for communication over communication network **29**. Using network module **36** as a communication interface, server **28** receives signals or data from input module **32** and transmits signals or data to output module **34**. A backplane **40** includes a plurality of banks **42** having at least one slot for receiving input and output modules **32** and **34** and their corresponding terminal connector blocks, such as connector block **46**. The connector blocks include a plurality of terminals configured to receive signal-carrying wires routed from consoles **70**, **72** and safety interface **30**. Network module **36** illustratively

further includes a serial port **50** for serial communication with various nodes in control system **12**.

Safety interface **30** of FIG. **2** is configured to coordinate and manage communication between consoles **70**, **72** and output devices **20** and to transmit status signals to input module **32** for remote monitoring over communication network **29**. As shown in FIG. **2**, safety interface **30** is illustratively an input and output interface communicatively coupled to input module **32**, output module **34**, and each of consoles **70**, **72** and output devices **20**. Safety interface **30** may be a microprocessor, a circuit board, a software program, or any other suitable interface. In the illustrated embodiment described herein, however, safety interface **30** is a circuit board including a plurality of switches and connectors which provides a single, localized interface for nodes in control system **12**. As such, safety interface **30** is configured to provide a centralized location for troubleshooting communication between nodes on control system **12**.

Safety interface **30** is configured to selectively re-route discrete lines or signals to and from various nodes in control system **12**. In particular, safety interface **30** selectively re-routes discrete lines from consoles **70**, **72** to output devices **20**, to input module **32**, and back to consoles **70**, **72**. Safety interface **30** also selectively re-routes discrete lines from output devices **20** to consoles **70**, **72**, to input module **32**, and back to output devices **20**. Safety interface **30** also selectively re-routes discrete lines or signals from output module **34** to output devices **20** and to consoles **70**, **72**.

FIG. **5** shows an exemplary embodiment of safety interface **30** of FIG. **2**. Safety interface **30** of the illustrated embodiment comprises a plurality of components mounted to a printed circuit board (PCB) **31**, illustratively including a plurality of switches **114**, a diode array **110**, a light-emitting diode (LED) panel **112**, and electrical connectors or headers **90-108**. The electrical connectors **90-108** are configured to receive signal-carrying wires from at least one of primary console **70**, secondary console **72**, input modules **32**, output module **34**, and output devices **20** to provide a communication link therebetween. In one embodiment, a conventional wire harness (not shown) couples the wires to each of connectors **90-108**. In one embodiment, electrical connectors **90-108** include conductive pins **86** configured to electrically communicate with the received wires. The conductive pins **86** are mounted to circuit board **31** and are coupled to conductive pathways or traces, illustratively traces **88**, on circuit board **31** that are routed to other components on circuit board **31**. As such, signals transmitted over the wires to electrical connectors **90-108** are routed by safety interface **30** to other components on the card, such as to diode array **110**, switches **114**, and LED panel **112**, or to other electrical connectors **90-108** for transmission to nodes on control system **12**. For the sake of clarity, only several traces **88** and several conductive pins **86** are illustrated in FIG. **5**. However, each connector **90-108** includes conductive pins **86** that are coupled to traces **88** on circuit board **31**.

In the illustrated embodiment, circuit board **31** of safety interface **30** is a conventional printed circuit board including a plurality of conductive pathways or traces **88** routed between connectors **90-108**, diode array **110**, switches **114**, and LED panel **112**. The conductive traces **88** are etched into a non-conductive substrate to facilitate communication between connectors **90-108**, diode array **110**, switches **114**, and LED panel **112**. The printed circuit board **31** of safety interface **30** may include any suitable number of layers to support the plurality of traces.

In the illustrated embodiment, connector **90** is configured to receive a wire harness comprising a plurality of wires from primary console **70** to electrically connect and provide a communication link between primary console **70** and safety interface **30**. Similarly, connector **92** is configured to receive a wire harness from secondary console **72**, connector **94** from input module **32**, connector **96** from output module **34**, connector **98** from device **74**, connector **100** from device **80**, connector **102** from sensor **76**, connector **104** from sensor **82**, connector **106** from light **78**, and connector **108** from light **84**.

Diode array **110** of FIG. **5** is configured to link control signals transmitted from consoles **70** and **72** to output devices **20**. An exemplary diode array **110** is illustrated in FIG. **16**. In one embodiment, diode array **110** reduces the likelihood that a control signal transmitted from one of consoles **70**, **72** and received by one of output devices **20** is also received by the other of consoles **70**, **72**. For example, a discrete line configured to carry a control signal is routed from each of consoles **70**, **72** to diode array **110**. Diode array **110** merges the two discrete lines from consoles **70**, **72** into a single discrete line routed to an output device **20**. By using a dual switching, common cathode diode arrangement, as shown in the illustrative embodiment of FIG. **16**, the likelihood that control signals transmitted from one of consoles **70**, **72** are received by the other of consoles **70**, **72** is reduced or eliminated, thereby reducing the likelihood of improper feedback at consoles **70**, **72**.

Still referring to FIG. **5**, LED panel **112** of safety interface **30** provides a status indication of the receipt of various signals from nodes on control system **12**. LED panel **112** is configured to assist in troubleshooting at safety interface **30** and, for example, to verify that control signals from consoles **70**, **72** are received by safety interface **30**. In the illustrated embodiment, an appropriate LED on LED panel **112** illuminates upon receipt of a signal transmitted from one of the consoles **70** and **72**. Any number and color of LED's may be used, and each LED may provide a different status indication.

Safety interface **30** further includes a plurality of switches **114**, as shown in FIG. **5**. Any desired number of switches **114** may be used, although twelve switches (SW**1**-SW**12**) are illustrated in FIG. **5**. Switches **114** are illustratively relays in electrical communication with at least one of connectors **90-108**, although any suitable switching device may be used. As explained herein, each switch **114** is configured to receive a signal from a device, module, or console of control system **12** and, upon a triggering event, transmit the signal to a same or different device, module, or console. In the illustrated embodiment, the triggering event is an output signal transmitted from output module **34** to each switch **114**. Switches **114** are illustratively conventional normally-open relays comprising an internal coil which, when energized with a 24 VDC basis from output module **34**, closes an internal contact to thereby complete the circuit and transmit a signal to an output device **20**, console **70**, **72**, or other node of control system **12**.

FIGS. **6** and **7** provide an illustration of output module **34** in communication with switches **114** of safety interface **30**. Output module **34** is connected to an external power supply **120**. In one embodiment, power supply **120** is a 24 VDC power supply. Upon receiving network signals from network module **36**, output module **34** transmits corresponding output signals from output terminals **130**, illustratively OT**2**-OT**13**, to switches **114**. In the illustrated embodiment, the output signals from output terminals **130** are routed through connector **96** of safety interface **30** to switches **114**. In the illustrated embodiment, the output signal is a 24 VDC signal provided by power supply **120**, although other suitable signals may be used. Output signals from output module **34** are configured to energize switches **114** on safety interface **30** to close the

switches **114**, thereby permitting switches **114** to transmit signals to output devices **20** or consoles **70**, **72**. As shown in FIG. **6**, OT**2**, OT**3**, OT**4**, OT**5**, OT**6**, and OT**7** are electrically wired through connector **96** to SW**1**, SW**2**, SW**3**, SW**4**, SW**5**, and SW**6**, respectively, for transmitting output signals therebetween. As shown in FIG. **7**, OT**8**, OT**9**, OT**10**, OT**11**, OT**12**, and OT**13** are electrically wired through connector **96** to SW**7**, SW**8**, SW**9**, SW**10**, SW**11**, and SW**12**, respectively, for transmitting output signals therebetween.

Referring to FIG. **6**, power supply **122** is coupled to SW**1**, SW**2**, and SW**3** via connector **98**, and power supply **124** is coupled to SW**4**, SW**5**, and SW**6** via connector **100**. In one embodiment, power supply **122** and power supply **124** are each 24 VDC power supplies, although other suitable power supplies may be used. Alternatively, power supply **122** and power supply **124** may be one power supply or may each include multiple power supplies. In the illustrative embodiment, power supply **122** is configured to provide power to device **74** and to control circuitry **300** of consoles **70** and **72**, and power supply **124** is configured to provide power to device **80** and to control circuitry **300** of consoles **70** and **72**.

Referring to FIG. **7**, power supply **126** is coupled to SW**7** via connector **102** and to SW**8** and SW**9** via connector **106**. Power supply **128** is coupled to SW**10** via connector **104** and to SW**11** and SW**12** via connector **108**. In one embodiment, power supply **126** and power supply **128** are each 28 VDC power supplies, although other suitable power supplies may be used. Alternatively, power supply **126** and power supply **128** may be one power supply or may each include multiple power supplies. In the illustrative embodiment, power supply **126** is configured to provide power to sensor **76** and light **78**, and power supply **128** is configured to provide power to sensor **82** and light **84**.

Referring to FIGS. **8** and **9**, an exemplary user interface **150** of consoles **70** and **72** is shown. For discussion purposes, user interface **150** is described herein as the user interface at the "local" operator console, which may be either primary console **70** or secondary console **72**. The "remote" operator console refers to the other of primary console **70** and secondary console **72**. In this description, the local operator console is referenced as console **70** and the remote operator console is referenced as console **72**, although these may be reversed. In one embodiment, user interface **150** includes a touchscreen for receiving user inputs, although any suitable user interface may be used which receives user inputs and provides control, manipulation, and/or monitoring of output devices **20** to an operator or user.

User interface **150** illustratively includes an interactive graphical display **168**, such as on a touchscreen, which displays feedback and other relevant data from nodes on control system **12**. In one embodiment, user interface **150** is configured to provide multiple graphical displays, navigable by an operator, which provide controls, video and data feedback, and/or status indication to the operator. FIGS. **8** and **9** illustrate an exemplary graphical display **168** of user interface **150**, although other suitable graphical displays may be provided by user interface **150**. For illustrative purposes, graphical display **168** shown in FIGS. **8** and **9** is simplified and illustrates only a few of the user inputs, illustratively touch cells or "virtual buttons" on a touchscreen, used in accordance with the present disclosure. Another type of instrument panel with physical switches, buttons, or other controls may be used in place of the user interface **150** for operator control consoles **70**, **72**.

Exemplary graphical display **168** of user interface **150** displays feedback from and provides controls to output devices **20** located in control system **12**. Graphical display **168** includes a monitoring display **171** configured to provide feedback to the local operator console **70**. In one embodiment, monitoring display **171** displays the status of the controls of control circuitry **300** of the local operator console **70**, as described herein. In one embodiment, monitoring display **171** provides feedback from devices **20**. Monitoring display **171** may alternatively provide feedback from other communication on control system **12**.

Graphical display **168** includes a plurality of user inputs **170**, illustratively including first inputs **152**, second inputs **154**, device inputs **177** and **179**, and light inputs **173** and **175**. First inputs **152** include a device cell **156**, a sensor cell **158**, and a light cell **160** corresponding to device **74**, sensor **76**, and light **78**, respectively. Second inputs **154** similarly include a device cell **162**, a sensor cell **164**, and a light cell **166** corresponding to device **80**, sensor **82**, and light **84**, respectively. In the illustrative embodiment, first inputs **152** and second inputs **154** are device selection inputs configured to select a corresponding output device **20** for control by the local operator console **70**. In particular, first inputs **152** and second inputs **154** are each configured to assign control of the corresponding output device **20** to the local operator console **70** and disable control of the corresponding output device **20** by the remote operator console **72**. In one embodiment, each of sensor cells **158** and **164** and light cells **160** and **166** are also configured to enable or activate the corresponding output device **20**. In one embodiment, device inputs **177** and **179** are configured to enable devices **74** and **80**, respectively, and light inputs **173** and **175** are configured to illuminate lights **78** and **84**, respectively. Device inputs **177** and **179** may also activate corresponding output devices **20** and/or provide other control inputs for output devices **20**. Alternatively, any desired number of user inputs **170** may be provided at graphical display **168** to perform any desired operation. In one embodiment, the plurality of user inputs **170** includes additional user inputs not illustrated in FIGS. **8** and **9**.

In one embodiment, the availability of each of user inputs **170** for selection is indicated by the display of user inputs **170** on graphical interface **168**. The availability of user inputs **170** depends on whether the corresponding output device **20** is available for control at the local console **70**, as explained herein. In the illustrated embodiment, the user inputs **170** which are unavailable for selection are removed from graphical display **168** to disable the selection of these user inputs **170** by an operator. As such, the functionality of the unavailable user input **170** is disabled to block or limit access by an operator to the controls, feedback data, and/or display of the output device **20** corresponding to the unavailable user input **170**. Referring to FIG. **8**, each of first inputs **152** and second inputs **154** are illustratively displayed on graphical interface **168** and are thus available for selection. The dashed lines surrounding device inputs **177** and **179** and light inputs **173** and **175** indicate that these inputs are illustratively not displayed on graphical display **168** and are thus unavailable for selection. Alternatively, the local console **70** may indicate the unavailability of user inputs **170** on graphical display **168** by any other suitable indication of unavailability, such as by color coding or marking each available and unavailable user input **170**.

The availability of first inputs **152** and second inputs **154** indicates the availability of each corresponding output device **20** for control at the local operator console **70**. If one of output devices **20** is not available for control at the local operator console **70** (i.e. such as when the remote operator console **72** has been assigned to control the output device **20**), the corresponding first input **152** or second input **154** configured to control that output device **20** is disabled at the local operator

console **70** to prevent the local operator console **70** from gaining control of that output device **20**. In one embodiment, the local operator console **70** is also not able to monitor some or all feedback from the output device **20** corresponding to the disabled user input **170**. Referring to FIG. **9**, sensor cell **158** and device cell **162** are illustratively each unavailable for selection which prevents an operator from gaining control of sensor **76** and device **80**, respectively.

In the illustrated embodiment, device inputs **177** and **179** and light inputs **173** and **175** are made available for selection on graphical display **168** by the selection of device cells **156** and **162** and light cells **160** and **166**, respectively. As such, when any of device cells **156** and **162** and light cells **160** and **166** are unavailable at the local operator console **70**, the corresponding device inputs **177** and **179** and light inputs **173** and **175** are unavailable. For example, referring to FIG. **9**, device cell **156** and light cell **160** are illustratively selected. As such, device input **177** and light input **173** are illustratively available for selection. In FIG. **9**, light input **173** is also illustratively selected, which provides illumination to light **78**.

User inputs **170**, as well as control circuitry **300**, provide various control inputs for output devices **20**, and DIO system **10** coordinates, monitors, and distributes these controls. Selection of an appropriate one of user inputs **170** at the local operator console **70** assigns control of the corresponding output device **20** to the local operator console **70** and disables control of the corresponding output device **20** at the remote operator console **72**, as explained herein with reference to FIG. **10**. In one embodiment, the selection of an appropriate one of user inputs **170** also enables the local console **70** to control the corresponding output device **20**, such as by providing power to control circuitry **300**, as explained herein with reference to FIG. **11**. In one embodiment, the selection of sensor cells **158** and **164** and light cells **160** and **166** activates sensors **76** and **82** and lights **78** and **84**, respectively, and the selection of device inputs **177** and **179** activates devices **74** and **80**, respectively, as explained herein with reference to FIG. **12**. In one embodiment, upon selecting one of user inputs **170**, another graphical display may appear on user interface **150** providing information, feedback, and/or controls, including additional user inputs, pertaining to the corresponding output device **20** selected.

The flowchart of FIG. **10** illustrates one embodiment of assigning to an operator console the control and/or monitoring capability of one of output devices **20**. By assigning control of an output device to the local operator console **70**, the ability of the remote operator console **72** to control the output device **20** assigned to local operator console **70** is disabled, as described herein. As such, the likelihood of output devices **20** receiving conflicting control signals from multiple operator consoles **70**, **72** is reduced or eliminated.

Referring to FIG. **10**, it is first determined whether the control of the output device **20** is available at the local operator console **70**, as represented by block **200**. As described above, the availability of each output device **20** for control by the local console **70** is determined by the display of the corresponding user input **170** for selection at the local console **70**. If the corresponding user input **170** is available for selection at the local console **70**, the corresponding output device **20** is available for control by the local console **70**. In one embodiment, the unavailability of the output device **20** for control by the local console **70** may result from the remote console **72** already being in control of that output device **20**.

If the output device **20** is available for control, the operator selects the corresponding one of first inputs **152** and second inputs **154** at the local operator console **70**, as represented by block **202** of FIG. **10**. The output device **20** is thereby assigned to the local operator console **70**, as illustrated at block **204**. In one embodiment, prior to assigning the output device **20** to the local console **70**, software at local console **70** first verifies that the selected output device **20** is available for control and no faults or other conflicts have occurred, as described herein with reference to FIG. **19**. Upon being assigned to control the output device **20**, the local operator console **70** is able to control and/or monitor the output device **20** as illustrated at block **206**. At block **206**, access to controls, feedback, and/or other monitoring data for the output device **20** is made available on user interface **150** of the local operator console **70**. For example, referring to FIG. **9**, the selection of device cell **156** and light cell **160** respectively provides access to device input **177**, which allows an operator to activate or otherwise control device **74**, and to light input **173**, which allows an operator to turn on or off the lamp in light **78**.

As represented by block **208**, the local operator console **70** transmits a signal, illustratively a network signal over the communication network **29**, to the remote operator console **72**. When remote operator console **72** receives the signal, the user input **170** at the remote operator console **72** corresponding to the output device **20** assigned to the local operator console **70** is disabled and becomes unavailable for selection, as represented by block **210**. Accordingly, the control of the output device **20** by the remote operator console **72** is prevented or disabled, as illustrated at block **212**. In one embodiment, monitoring of the output device **20** by the remote console **72** is also prevented or disabled. As such, only the local operator console **70** is configured to control and monitor the output device **20**. In one embodiment, software on main computer **28**, illustrated in FIGS. **1** and **2**, contains instructions to coordinate the disabling of the appropriate user input **170** at the remote operator console **72**, as described herein with reference to FIG. **11***a*. In particular, the network signal transmitted from the local operator console **70** over communication network **29** at block **208** is received by server **28**. Upon verifying that remote console **72** does not have control of the desired output device **20** and that no other conflicts exist, server **28** transmits a network signal over communication network **29** to the remote operator console **72** to disable the appropriate user input **170** at the remote operator console **72**. Server **28** may also send a network signal back to local console **70** to provide confirmation to local console **70** that no conflicts exist and to acknowledge assignment of the output device **20** to the local console **70**.

Each of first inputs **152** and second inputs **154** is configured to assign control and/or monitoring of the corresponding output device **20** to the local operator console **70** and disable control and/or monitoring of the corresponding output device **20** at the remote console **72**. For example, the selection of device cell **156** or **162** at primary console **70** assigns control of device **74** or **80**, respectively, to primary console **70** while disabling control of the selected device **74** or **80** by secondary console **72**. The selection of sensor cell **158** or **164** at primary console **70** assigns control of sensor **76** or **82**, respectively, to primary console **70** while disabling control of the selected sensor **76** or **82** by secondary console **72**. The selection of light cell **160** or **166** at primary console **70** assigns control of light **78** or **84**, respectively, to primary console **70** while disabling control of the selected light **78** or **84** by secondary console **72**. Similarly, the selection of first inputs **152** and second inputs **154** at secondary console **72** assigns control of corresponding output devices **20** to secondary console **72** and disables control of corresponding output devices **20** at primary console **70**.

The flowchart of FIG. **11** provides an illustrated embodiment for enabling an operator console to control output devices **20**, in particular devices **74** and **80**. Upon selection of one of first inputs **152** and second inputs **154** at block **202** of FIG. **10**, the local operator console **70** is configured to transmit a signal to safety interface **30** of DIO system **10**, as represented by block **220** of FIG. **11**. In the illustrated embodiment, the signal is a network signal sent by the local operator console **70** over communication network **29**, received by output module **34** via network module **36**, and converted to an output signal sent from output module **34** to one of switches **114** on safety interface **30**. In one embodiment, the network signal is simultaneously sent to both the remote operator console **72** in block **208** of FIG. **10** and to safety interface **30** (via output module **34**) as illustrated at block **220** of FIG. **11**.

Upon receipt of the signal, safety interface **30** transmits an enable signal from switch **114** to the local operator console **70**, as represented by block **222**. The enable signal is configured to enable the local operator console **70** to control the selected one of devices **74** and **80**, as represented by block **224**. The enable signal may alternatively enable the local operator console **70** to control one of sensors **76** and **82** and lights **78** and **84** when appropriate user inputs **170** are selected. In the illustrated embodiment, the enable signal is a power signal configured to provide power to control circuitry **300** at the local operator console **70** for controlling one of devices **74** and **80**.

For example, the embodiment of FIG. **11** will now be described with reference to FIGS. **6** and **8** for enabling control of device **74** at primary console **70** or secondary console **72**. Upon selecting device cell **156** at primary console **70**, a network signal is transmitted over communication network **29** to server **28**. As described above with reference to FIG. **10**, control of device **74** at secondary console **72** is disabled when device cell **156** is selected at primary console **70**. Output module **34** of DIO system **10** receives the network signal via network module **36** and transmits a corresponding output signal from OT**4** through connector **96** to SW**3** on safety interface **30**. Upon receiving the output signal, SW**3** is energized and transmits an enable signal through connector **90** to primary console **70**. The enable signal illustratively provides 24 VDC from power supply **122** to control circuitry **300** of primary console **70** to enable control of device **74** at primary console **70**.

Alternatively, upon selecting device cell **156** at secondary console **72**, a network signal is transmitted over communication network **29** to server **28**. As described above with reference to FIG. **10**, control of device **74** at primary console **70** is disabled when device cell **156** is selected at secondary console **72**. Output module **34** of DIO system **10** receives the network signal via network module **36** and transmits a corresponding output signal from OT**2** through connector **96** to SW**1** on safety interface **30**. Upon receiving the output signal, SW**1** is energized and transmits an enable signal through connector **92** to secondary console **72**. The enable signal illustratively provides 24 VDC from power supply **122** to control circuitry **300** of secondary console **72** to enable control of device **74** at secondary console **72**.

Similarly, control of device **80** may be enabled at primary console **70** or secondary console **72**. Upon selecting device cell **162** at primary console **70**, a network signal is transmitted over communication network **29** to server **28**. As described above with reference to FIG. **10**, control of device **80** at secondary console **72** is disabled when device cell **162** is selected at primary console **70**. Output module **34** of DIO system **10** receives the network signal via network module **36** and transmits a corresponding output signal from OT**7** through connector **96** to SW**6** on safety interface **30**. Upon receiving the output signal, SW**6** is energized and transmits an enable signal through connector **90** to primary console **70**. The enable signal illustratively provides 24 VDC from power supply **124** to control circuitry **300** of primary console **70** to enable control of device **80** at primary console **70**.

Alternatively, upon selecting device cell **162** at secondary console **72**, a network signal is transmitted over communication network **29** to server **28**. As described above with reference to FIG. **10**, control of device **80** at primary console **70** is disabled when device cell **162** is selected at secondary console **72**. Output module **34** of DIO system **10** receives the network signal via network module **36** and transmits a corresponding output signal from OT**5** through connector **96** to SW**4** on safety interface **30**. Upon receiving the output signal, SW**4** is energized and transmits an enable signal through connector **92** to secondary console **72**. The enable signal illustratively provides 24 VDC from power supply **124** to control circuitry **300** of secondary console **72** to enable control of device **80** at secondary console **72**.

As described above, disabling control by remote console **72** of the output device **20** that was selected for control by local console **70** (illustrated in the flowchart of FIG. **10**) may be coordinated by main computer **28** over communication network **29**. Referring to FIG. **11***a*, software **262** on main computer **28** may disable the appropriate user input **170** at remote console **72** corresponding to the output device **20** selected at local console **70**. As described above, upon selection of one of first and second inputs **152** and **154** at local console **70** (block **202** of FIG. **10**), local console **70** transmits a signal to safety interface **30** (block **220** of FIG. **11**); in response, safety interface **30** transmits a corresponding enable signal to local console **70** (block **222** of FIG. **11**). As illustrated in block **250** of FIG. **11***a*, this enable signal sent to local console **70** is also sent to input module **32** for receipt by main computer **28** over communication network **29**. Upon receipt of the signal by main computer **28**, software **262** at main computer **28** confirms that the selected output device **20** is not already assigned to remote console **72**, as represented by block **252**. Software **262** may also confirm at block **252** that no other conflicts or faults exist at the selected output device **20** or at remote console **72**. If no conflicts or other errors exist, software **262** instructs main computer **28** to transmit a disable signal to remote console **72**, as represented by block **254**. Software **262** may also instruct main computer **28** to acknowledge assignment of the output device **20** to the local console **70**, as represented by block **256**. This acknowledgment may be in the form of an acknowledgment signal sent over communication network **29** back to local console **70**. In one embodiment, local console **70** is assigned control of the selected output device **20** only upon receipt of the acknowledgment signal from main computer **28** in block **256**.

Upon receiving the disable signal sent by main computer **28** at block **254**, remote console **72** disables the corresponding user input **170** at user interface **150**, as represented by block **258**. In particular, software **264** at remote console **72** contains instructions that disable the user input **170** on user interface **150** upon receipt of the disable signal from main computer **28**. By disabling the user input **170** at block **258**, control of the output device **20** by remote console **72** is disabled, as represented by block **260**.

In one illustrated embodiment, user inputs **170** are also configured to activate or enable output devices **20**, as illustrated in FIG. **12**. Upon selection of an appropriate one of user inputs **170** at block **240**, the local operator console **70** is configured to transmit a signal to safety interface **30** of DIO

system **10**, as represented by block **242**. In the illustrated embodiment, the signal is a network signal sent by the local operator console **70** over communication network **29**, received by output module **34** via network module **36**, and converted to an output signal sent from output module **34** through connector **96** to one of switches **114** on safety interface **30**. Upon receipt of the signal, safety interface **30** transmits an enable signal from the switch **114** to the appropriate one of output devices **20** as illustrated at block **244**. Upon receipt of the enable signal, the output device **20** is activated or powered up, as represented by block **246**.

FIG. **12** is described herein with reference to FIGS. **6-8** for activating or enabling output devices **20**. In the illustrated embodiment, selection of sensor cells **158** and **164** and light cells **160** and **166** activates or enables the corresponding output device **20**, while the selection of device inputs **177** and **179** activates or enables devices **74** and **80**, respectively. For example, upon selection of sensor cell **158** at one of operator consoles **70** and **72**, a network signal is transmitted over communication network **29** to server **28**. Output module **34** of DIO system **10** receives the network signal via network module **36** and transmits a corresponding output signal from OT**8** through connector **96** to SW**7** on safety interface **30**. Upon receiving the output signal, SW**7** is energized and transmits an enable signal through connector **102** to sensor **76** to activate sensor **76**. The enable signal from SW**7** is illustratively a ground or "active low" signal provided by power supply **126**. In the illustrated embodiment, energizing SW**7** completes a circuit between power supply **126** and sensor **76** by grounding a 28 VDC signal provided from power supply **126** to sensor **76**. Alternatively, SW**7** may provide a power signal, such as 28 VDC, directly to sensor **76**.

Similarly, upon selection of sensor cell **164** at one of consoles **70** and **72**, a network signal is transmitted over communication network **29** to server **28**. Output module **34** of DIO system **10** receives the network signal via network module **36** and transmits a corresponding output signal from OT**11** through connector **96** to SW**10** on safety interface **30**. Upon receiving the output signal, SW**10** is energized and transmits an enable signal through connector **104** to sensor **82** to activate sensor **82**. The enable signal from SW**10** is illustratively a ground or "active low" signal provided by power supply **128**. In the illustrated embodiment, energizing SW**10** completes a circuit between power supply **128** and sensor **82** by grounding a 28 VDC signal provided from power supply **128** to sensor **82**. Alternatively, SW**10** may provide a power signal, such as 28 VDC, directly to sensor **82**.

In another example, upon selection of light cell **160** at one of consoles **70** and **72**, a network signal is transmitted over communication network **29** to server **28**. Output module **34** of DIO system **10** receives the network signal via network module **36** and transmits a corresponding output signal from OT**10** through connector **96** to SW**9** on safety interface **30**. Upon receiving the output signal, SW**9** is energized and transmits an enable signal through connector **106** to light **78** to activate light **78**. The enable signal from SW**9** is illustratively a ground or "active low" signal provided by power supply **126**. In the illustrated embodiment, energizing SW**9** completes a circuit between power supply **126** and light **78** by grounding a 28 VDC signal provided from power supply **126** to light **78**. Alternatively, SW**9** may provide a power signal, such as 28 VDC, directly to light **78**.

Similarly, upon selection of light cell **166**, a network signal is transmitted over communication network **29** to server **28**. Output module **34** of DIO system **10** receives the network signal via network module **36** and transmits a corresponding output signal from OT**13** through connector **96** to SW**12** on safety interface **30**. Upon receiving the output signal, SW**12** is energized and transmits an enable signal through connector **108** to light **84** to power up or activate light **84**. The enable signal from SW**12** is illustratively a ground or "active low" signal provided by power supply **128**. In the illustrated embodiment, energizing SW**12** completes a circuit between power supply **128** and light **84** by grounding a 28 VDC signal provided from power supply **128** to light **84**. Alternatively, SW**12** may provide a power signal, such as 28 VDC, directly to light **84**.

The activation of light **78** or **84** upon selection of light cell **160** or **166**, respectively, as shown in FIG. **12**, illustratively provides power to a gimbal or other light-carrying apparatus configured to move or manipulate light **78** or **84**. In one embodiment, light inputs **173** and **175** are configured to energize a lamp or bulb in lights **78** and **84**, respectively. For example, the selection of light input **173** at one of consoles **70** and **72** transmits a network signal to output module **34**, which transmits a corresponding output signal from OT**9** to SW**8** via connector **96**. Upon receiving the output signal, SW**8** is energized and transmits an enable signal, illustratively a ground signal from power supply **126**, to light **78** via connector **106** to energize a lamp in light **78**. Similarly, the selection of light input **175** at one of consoles **70** and **72** transmits a network signal to output module **34**, which transmits a corresponding output signal from OT**12** to SW**11** via connector **96**. Upon receiving the output signal, SW**11** is energized and transmits an enable signal, illustratively a ground signal from power supply **128**, to light **84** via connector **108** to energize a lamp in light **84**. Alternatively, the selection of light cells **160** and **166** may also energize the lamps in lights **78** and **84**, respectively.

In the illustrated embodiment, the selection of device inputs **177** and **179** activate or enable devices **74** and **80**, respectively. In one embodiment, device input **177** is enabled upon the selection of device cell **156**, and device input **179** is enabled upon the selection of device cell **162**. Referring to FIGS. **6** and **12**, upon selection of device input **177** at one of consoles **70** and **72**, a network signal is transmitted over communication network **29** to output module **34**, which transmits a corresponding output signal from OT**3** through connector **96** to SW**2** on safety interface **30**. Upon receiving the output signal, SW**2** is energized and transmits an enable signal through connector **98** to device **74** to activate or provide power to device **74**. The enable signal from SW**2** is illustratively a ground or "active low" signal provided by power supply **122**. In the illustrated embodiment, the ground signal provided to device **74** upon energizing SW**2** completes a circuit between power supply **122** and device **74** and enables device **74** to receive 24 VDC from power supply **122**. Alternatively, SW**2** may provide a power signal, such as 24 VDC from power supply **122**, directly to device **74**.

Similarly, upon selection of device input **179** at one of consoles **70** and **72**, a network signal is transmitted over communication network **29** to output module **34**, which transmits a corresponding output signal from OT**6** through connector **96** to SW**5** on safety interface **30**. Upon receiving the output signal, SW**5** is energized and transmits an enable signal through connector **100** to device **80** to activate or provide power to device **80**. The enable signal from SW**5** is illustratively a ground or "active low" signal provided by power supply **124**. In the illustrated embodiment, the ground signal provided to device **80** upon energizing SW**5** completes a circuit between power supply **124** and device **80** and enables device **80** to receive 24 VDC from power supply **124**. Alternatively, SW**5** may provide a power signal, such as 24 VDC from power supply **124**, directly to device **80**.

In other words, in one illustrated embodiment, the selected output device **20** is automatically activated or enabled when a user input **170** for the particular output device **20** is selected. In another illustrated embodiment, the output device **20** is not activated or enabled until a separate device control input (such as input **177** or **179**) is selected by an operator. In this embodiment, additional controls (either controls on the graphical user interface **150** or separate controls such as illustrated in FIG. **15**, for example) are then used to control the output device **20** after it has been activated or enabled.

Referring now to FIG. **13**, power to at least one of output devices **20** is removed or control of at least one of output devices **20** at the local operator console **70** is disabled upon the occurrence of an event. As shown in FIG. **13**, exemplary events include an override by the remote operator console **72** as illustrated at block **270**, a power outage at the local console **70** as illustrated at block **272**, a power outage at DIO system **10** as illustrated at block **274**, a power outage at the output device **20** as illustrated at block **276**, any other control override or detected problems as illustrated at block **278**, and de-selection of the output device **20** at the local operator console **70** as illustrated at block **280**. As represented by block **282**, if any of the events illustrated in blocks **270-280** occur, the assignment of the output device to the local operator console **70** (shown in block **204** of FIG. **10**) is cancelled or removed. As represented by block **284**, if any of the events illustrated in blocks **270-280** occur, the control of the output device by the local operator console **70** (shown in block **224** of FIG. **11**) is disabled. As represented by block **286**, if any of the events illustrated in blocks **270-280** occur, the activated output device **20** (shown in block **246** of FIG. **12**) is disabled. Software at local console **70**, remote console **72**, and main computer **28** may continuously monitor for the events in blocks **270** through **280** and may contain instructions for performing the actions illustrated in blocks **282**, **284**, and **286**.

DIO system **10** and safety interface **30** may be used in a variety of applications. In one embodiment, DIO system **10** and safety interface **30** are implemented in a ship protection system, in particular a ship protection system for a naval or military vessel. As mentioned above, the ship protection system, which is illustrated by control system **12** of FIGS. **1** and **2**, is configured to conduct surveillance of the area surrounding the vessel and evaluate and respond to identified threats to the vessel.

In a ship protection system, exemplary lights **78** and **84** are high-intensity searchlights commonly used as surveillance lighting on military or law enforcement vehicles, ships, or aircraft and may have automatic object-tracking capability. Devices **74** and **80** of FIGS. **1** and **2** illustratively correspond to weapons or lethal effectors **74** and **80**, respectively, configured to receive control signals from at least two consoles **14**, illustratively consoles **70** and **72**, for enabling, arming, charging, and firing each weapon **74** and **80**. Exemplary sensors **76** and **82** are electro-optical sensors each including a video camera providing video and/or data feedback to consoles **70** and **72**. In one embodiment, each sensor **76** and **82** comprises a plurality of cameras, including infrared or thermal, laser, and/or standard video cameras, mounted on a turret unit and configured to provide multiple camera feedback signals for display on consoles **70** and **72**.

In one embodiment, weapon **74**, sensor **76**, and light **78** are positioned on a port side of the vessel, while weapon **80**, sensor **82**, and light **84** are positioned on a starboard side of the vessel. Similarly, power supplies **122** and **126** are located on the port side of the vessel, and power supplies **124** and **128** are located on the starboard side of the vessel. Power supplies **122**, **124**, **126**, and **128** may be power panels utilized by other devices or systems on the vessel.

Referring to FIG. **14**, an exemplary user interface **150** of a ship protection system is illustrated. Port inputs **152** correspond to first inputs **152** of FIGS. **8** and **9** and provide control of output devices **20** located on the port side of the vessel, illustratively weapon **74**, sensor **76**, and light **78**. Similarly, starboard inputs **154** correspond to second inputs **154** of FIGS. **8** and **9** and provide control to output devices **20** located on the starboard side of the vessel, illustratively weapon **80**, sensor **82**, and light **84**. Monitoring display **171** monitors the status of the control signals transmitted from control circuitry **300** to weapons **74** and **80**. Monitoring display **171** illustratively includes indicators **180**, **182**, and **184** to indicate the firing status of one of weapons **74** and **80**. Indicator **180** provides indication of whether one of weapons **74** and **80** is armed. Indicator **182** provides indication of whether one of weapons **74** and **80** is charged. Indicator **184** provides indication of whether the firing of one of weapons **74** and **80** is enabled. In FIG. **14**, device cell **156** is illustratively selected. As such, indicators **180-184** illustratively correspond to the firing status of weapon **74**. Alternatively, indicators **180-184** may simultaneously indicate the firing status of both weapon **74** and weapon **80**.

Referring now to FIG. **15**, exemplary control circuitry **300** of primary and secondary consoles **70** and **72** is shown. Control circuitry **300** is configured to communicate arm, charge, fire enable, and fire commands from the local operator console **70** to weapons **74** and **80**. Control circuitry **300** includes selector switch **302**, charge switch **304**, arm switch **306**, fire enable switch **308**, and trigger switch **314**. Selector switch **302** illustratively toggles between two positions to select one of weapon **74** and weapon **80** for control at the local operator console **70**. As illustrated in FIG. **15**, selector switch **302** includes a plurality of two-position contacts **342** connected by a link **310**. Contacts **342** of selector switch **302** include a PORT position for providing control to weapon **74** and a STARBOARD position for providing control to weapon **80**. Selector switch **302** is configured to simultaneously move each contact **342** between the PORT position and the STARBOARD position. In the illustrated embodiment, trigger switch **314** is a hand controller such as a joystick, but other suitable trigger devices may be used. Control circuitry **300** illustratively further includes LEDs **312** which provide status indication of the arm, charge, fire enable, and fire commands as well as indication of whether weapon **74** or **80** has been selected for control by the local operator console **70**. LEDs **312** illustratively include ARM LED, CHG LED, FIRE ENABLE LED, STBD GUN SELECT LED, and PORT GUN SELECT LED.

A plurality of discrete lines **340**, illustratively lines **316-336**, configured to carry control signals are shown in FIG. **15**. Discrete lines **340** are illustratively wires configured to communicate power signals, including illustrative power signals Stbd_LE_Assigned_Cx on line **316**, Port_LE_Assigned_Cx on line **318**, Stbd_Chg_Cx on line **320**, Port_Chg_Cx on line **322**, Stbd_Arm_Cx on line **324**, Port_Arm_Cx on line **326**, Stbd_Fire_Cx on line **328**, Port_Fire_Cx on line **330**, Arm_Cx on line **332**, Fire_Enable_Cx on line **334**, and Gun_Select_Cx on line **336**. As shown in FIG. **15**, the variable "x" in each of the previously identified control signals represents either a "1", which corresponds to a control signal from primary console **70**, or a "2", which corresponds to a control signal from secondary console **72**. Discrete lines **340** are routed between control circuitry **300** and safety interface **30** of DIO system **10**. In particular, discrete lines **316** and **318** are routed from connector **90** (for control circuitry **300** of pri-

mary console **70**) or connector **92** (for control circuitry **300** of secondary console **72**), and discrete lines **320**, **322**, **324**, **326**, **328**, **330**, **332**, **334**, and **336** are routed to connector **90** (for control circuitry **300** of primary console **70**) or connector **92** (for control circuitry **300** of secondary console **72**). In the illustrated embodiment, discrete lines **340** are also routed to input module **32** for remote monitoring over communication network **29**, as illustrated in FIG. **18** and described herein.

Control circuitry **300** includes paths **344**, **346**, **348**, **341**, and **343**, each configured to carry a current or power signal. Path **344** links one of lines **316** and **318** to charge switch **304**, arm switch **306**, and line **336**. Path **346** links charge switch **304** to one of lines **320** and **322** and CHG LED. Path **348** links arm switch **306** to fire enable switch **308**, one of lines **324** and **326**, line **332**, and ARM LED. Path **341** links the fire enable switch **308** to trigger switch **314**, line **334**, and FIRE ENABLE LED. Path **343** links trigger switch **314** to one of lines **328** and **330**.

Referring to FIG. **16**, one embodiment of diode array **110** of safety interface **30** is shown. Diode array **110** comprises a plurality of diodes **440** mounted to safety interface **30** and in electrical communication with primary console **70**, secondary console **72**, weapon **74**, weapon **80**, and input module **32**. Diodes **440** illustratively include diodes **400**, **402**, **404**, **406**, **408**, **410**, **412**, **414**, **416**, **418**, **420**, and **422** arranged in a dual switching, common cathode diode arrangement. Several discrete lines are routed from diodes **440** to weapons **74** and **80**, including lines **424**, **430**, and **432** routed to weapon **74** via connector **98** of safety interface **30** and lines **426**, **428**, and **434** routed to weapon **80** via connector **100** of safety interface **30**. As illustrated in FIG. **16**, lines **320**, **322**, **324**, **326**, **328**, and **330** from control circuitry **300** of both primary console **70** and secondary console **72** are routed to diode array **110** and received by diodes **440**. In particular, discrete lines **320**, **322**, **324**, **326**, **328**, and **330** are routed to diode array **110** via connector **90** from control circuitry **300** of primary console **70** and via connector **92** from control circuitry **300** of secondary console **72**.

As mentioned above, diode array **110** coordinates the transmission of control signals, illustratively power signals, from primary and secondary consoles **70** and **72** to weapons **74** and **80**. In particular, diode **400** links Port_Chg_C**1** from line **322** of primary console **70** to line **424** for receipt by weapon **74** and blocks Port_Chg_C**2** from reaching line **322** of primary console **70**. Diode **402** links Port_Chg_C**2** from line **322** of secondary console **72** to line **424** for receipt by weapon **74** and blocks Port_Chg_C**1** from reaching line **322** of secondary console **72**. Diode **404** links Stbd_Chg_C**1** from line **320** of primary console **70** to line **426** for receipt by weapon **80** and blocks Stbd_Chg_C**2** from reaching line **320** of primary console **70**. Diode **406** links Stbd_Chg_C**2** from line **320** of secondary console **72** to line **426** for receipt by weapon **80** and blocks Stbd_Chg_C**1** from reaching line **320** of secondary console **72**. Diode **408** links Stbd_Arm_C**1** from line **324** of primary console **70** to line **428** for receipt by weapon **80** and blocks Stbd_Arm_C**2** from reaching line **324** of primary console **70**. Diode **410** links Stbd_Arm_C**2** from line **324** of secondary console **72** to line **428** for receipt by weapon **80** and blocks Stbd_Arm_C**1** from reaching line **324** of secondary console **72**. Diode **412** links Port_Arm_C**1** from line **326** of primary console **70** to line **430** for receipt by weapon **74** and blocks Port_Arm_C**2** from reaching line **326** of primary console **70**. Diode **414** links Port_Arm_C**2** from line **326** of secondary console **72** to line **430** for receipt by weapon **74** and blocks Port_Arm_C**1** from reaching line **326** of secondary console **72**. Diode **416** links Port_Fire_C**1** from line **330** of primary console **70** to line **432** for receipt by weapon **74** and blocks Port_Fire_C**2** from reaching line **330** of primary console **70**. Diode **418** links Port_Fire_C**2** from line **330** of secondary console **72** to line **432** for receipt by weapon **74** and blocks Port_Fire_C**1** from reaching line **330** of secondary console **72**. Diode **420** links Stbd_Fire_C**1** from line **328** of primary console **70** to line **434** for receipt by weapon **80** and blocks Stbd_Fire_C**2** from reaching line **328** of primary console **70**. Diode **422** links Stbd_Fire_C**2** from line **328** of secondary console **72** to line **434** for receipt by weapon **80** and blocks Stbd_Fire_C**1** from reaching line **328** of secondary console **72**.

Referring to FIG. **17**, an illustrative embodiment of the operation of control circuitry **300** in a ship protection system is provided. In particular, the flowchart of FIG. **17** illustrates the firing sequence of weapon **74** and/or weapon **80** using control circuitry **300** of FIG. **13**. As illustrated in FIG. **17**, the control of one of weapons **74** and **80** is first enabled in block **224** of FIG. **11**, as described above. Specifically, the enable signal transmitted from safety interface **30** is received by control circuitry **300** via line **316** or **318** to provide power to control circuitry **300** for controlling weapon **74** or weapon **80**, respectively. For example, upon selection of device cell **156** at the local operator console **70**, safety interface **30** transmits an enable signal, illustratively power signal Port_LE_Assigned_Cx, to control circuitry **300** of the local operator console **70** via line **318**. Similarly, upon selection of device cell **162** at the local operator console **70**, safety interface **30** transmits an enable signal, illustratively power signal Stbd_LE_Assigned_Cx, to control circuitry **300** of the local operator console **70** via line **316**. Port_LE_Assigned_Cx illustratively provides 24 VDC from power supply **122**, and Stbd_LE_Assigned_Cx illustratively provides 24 VDC from power supply **124**. In the shown embodiment, PORT GUN SELECT LED illuminates upon receipt of Port_LE_Assigned_Cx, and STBD GUN SELECT LED illuminates upon receipt of Stbd_LE_Assigned_Cx, indicating to the operator which of weapons **74** and **80** have been selected for control at the local console **70**.

As represented by block **350**, selector switch **302** is toggled between a first position and a second position to link the power signal received from safety interface **30** to additional current paths of control circuitry **300**. For example, if selector switch **302** is toggled to the PORT position, contacts **342** engage lines **318**, **322**, **326**, and **330**, and the power signal from line **318** is linked to path **344** in control circuitry **300**. If selector switch **302** is toggled to the STBD position, contacts **342** engage lines **316**, **320**, **324**, and **328**, and the power signal from line **316** is linked to path **344** in control circuitry **300**. Upon toggling selector switch **302** to the PORT or STBD position, the power signal, illustratively status signal GUN_SELECT_Cx, is transmitted via line **336** to input module **32** for remote monitoring over communication network **29**. GUN_SELECT_Cx provides indication that control circuitry **300** at the local operator console **70** is powered and ready to control one of weapons **74**, **80**. In one embodiment, GUN_SELECT_Cx is monitored at least one of consoles **70** and **72**.

Next, a selected one of weapon **74** and weapon **80** is enabled according to the embodiment shown in FIG. **12**, as shown in block **352** of FIG. **17**. For example, with selector switch **302** in the PORT position, device input **177** is selected at user interface **150** of the local operator console **70**. As described above with reference to FIG. **12**, the selection of the device input **177** energizes one of switches **114** to provide power to weapon **74**. Similarly, with selector switch **302** in the STBD position, device input **179** is provided on user interface **150**. As described above with reference to FIG. **12**,

the selection of device input **179** provides power to weapon **80**. With selector switch **302** in one of the PORT and STARBOARD positions and the appropriate one of device inputs **177** and **179** selected at user interface **150**, weapon **74** or weapon **80** is able to receive arm, charge, fire, and other control signals from the local operator console **70**.

Next, the enabled one of weapons **74** and **80** is armed, as represented by block **354**. Arm switch **306** is engaged and moved from an open position, as shown in FIG. **15**, to a closed ARM position to link the power signal received from path **344** to path **348**. When selector switch **302** is in the STBD position, the power signal, illustratively control signal Stbd_Arm_Cx, is transmitted from path **348** to line **324**, to diode array **110**, and finally to weapon **80** to arm weapon **80**. When selector switch **302** is in the PORT position, the power signal, illustratively control signal Port_Arm_Cx, is transmitted from path **348** to line **326**, to diode array **110**, and finally to weapon **74** to arm weapon **74**. In addition, ARM LED of control circuitry **300** illuminates, and a status signal Arm_Cx is transmitted via line **332** to input module **32** for remote monitoring over communication network **29**. Arm_Cx provides indication that one of weapons **74** and **80** is armed. In one embodiment, indicator **180** of monitoring display **171** indicates that the enabled one of weapons **74** and **80** is armed upon the engagement of arm switch **306**.

Next, the armed one of weapons **74** and **80** is charged, as represented by block **356**. Charge switch **304** is engaged and moved from an open position, as shown in FIG. **15**, to a closed CHARGE position to link the power signal received from path **344** to path **346**. If selector switch **302** is in the STBD position, the power signal, illustratively control signal Stbd_Chg_Cx, is transmitted from path **346** to line **320**, to diode array **110**, and finally to weapon **80** to thereby charge weapon **80**. If selector switch **302** is in the PORT position, the power signal, illustratively control signal Port_Chg_Cx, is transmitted from path **346** to line **322**, to diode array **110**, and finally to weapon **74** to charge weapon **74**. In addition, CHG LED of control circuitry **300** illuminates. In one embodiment, indicator **182** of monitoring display **171** indicates that the armed one of weapons **74** and **80** is charged upon the engagement of charge switch **304**.

Next, the charged one of weapons **74** and **80** is enabled for firing, as represented by block **358**. In the illustrated embodiment, fire enable switch **308** is a safety feature configured to reduce the likelihood of inadvertently engaging trigger switch **314** and firing the weapon. At block **358**, fire enable switch **308** is engaged and moved from an open position, as illustrated in FIG. **15**, to a closed FIRE_ENABLE position to link the power signal from path **348** to path **341**. As such, current is available at trigger switch **314**, and the weapon is ready to be fired. In addition, FIRE ENABLE LED of control circuitry **300** illuminates, and a status signal Fire_Enable_Cx is transmitted via line **334** to input module **32** for remote monitoring over communication network **29**. In one embodiment, indicator **184** of monitoring display **171** indicates that the charged one of weapons **74** and **80** is enabled for firing upon the engagement of fire enable switch **308**.

Next, a fire command may be transmitted to the one of weapons **74** and **80** enabled for firing, as represented by block **360**. To transmit a fire command, trigger switch **314** is engaged and moved from an open position, as shown in FIG. **15**, to a closed FIRE position to link the power signal from path **341** to path **343**. If selector switch **302** is in the STBD position, the power signal, illustratively control signal Stbd_Fire_Cx, is transmitted from path **343** to line **328**, to diode array **110**, and finally to weapon **80** to fire weapon **80**. If selector switch **302** is in the PORT position, the power signal, illustratively control signal Port_Fire_Cx, is transmitted from path **343** to line **330**, to diode array **110**, and finally to weapon **74** to fire weapon **74**. In one embodiment, user interface **150** of the local operator console **70** receives a status signal over communication network **29** and indicates a "Fire" status on graphical interface **168**.

Referring to FIG. **18**, each of lines **316-336** from control circuitry **300** are illustratively routed through safety interface **30** to input module **32** for remote monitoring over communication network **29**. In particular, each of lines **316-336** from primary console **70** is routed through connectors **90** and **94** to input module **32**, and each of lines **316-336** from secondary console **72** is routed through connectors **92** and **94** to input module **32**. Each of lines **424-434** from diode array **110** are also routed to input module **32** via connector **94** of safety interface **30** for remote monitoring over communication network **29**, as illustrated in FIG. **18**. As such, the status of each command sent from the local operator console **70** in the firing sequence may be monitored from server **28**.

Further, LED panel **112** of safety interface **30**, shown in FIG. **5**, illustratively provides status indication of the receipt of control signals from control circuitry **300** of the local operator console **70**. In one embodiment, an LED illuminates upon one of primary console **70** and secondary console **72** transmitting an arm, charge, or fire command to one of weapons **74** and **80**. Safety interface **30** in one embodiment utilizes eighteen LED's, each LED providing a different status indicator, although any number or combination of LED's may be used.

Referring to FIG. **19**, an exemplary embodiment of the firing sequence of FIG. **17** is illustrated. In particular, the flowchart of FIG. **19** illustrates the function of software **382** at the local console **70** (or remote console **72**) in the firing sequence for weapon **74** and/or weapon **80**. While the foregoing describes the firing sequence for controlling weapon **74**, weapon **80** is similarly controlled using the firing sequence illustrated in FIG. **19**.

Referring initially to block **378** of FIG. **19**, the power supply for powering weapon **74**, i.e., power supply **122** in FIG. **6**, is activated or powered on. At block **381**, a remote safety panel switch **380** is toggled to provide power from power supply **122** to a motor assembly (not shown) or other motion device located at weapon **74**. Upon enablement at block **381**, the motor assembly of weapon **74** is configured to receive control signals from local console **70** or remote console **72** for providing motion to weapon **74**, i.e., for aiming weapon **74**. The motor assembly may include several motors and gyros for providing a full range of motion to weapon **74** throughout the firing sequence. A video camera may also be mounted to weapon **74** to provide video feedback to local console **70** for assistance in aiming weapon **74**. In one embodiment, switch **380** is located at power supply **122** and requires keyed access.

Upon closing switch **380**, an operator may select the user input **156** (see FIG. **14**) to assign control of weapon **74** to the local console **70**, as illustrated in block **202** of FIG. **10**. Upon selection by an operator of user input **156**, software **382** at local console **70** performs several functions before assigning control of weapon **74** to the local console **70**. At block **384**, the state and mode of weapon **74** is checked. In one embodiment, software **382** verifies that weapon **74** is in a "ready" state and that weapon **74** is in a "tactical" mode. A driver at weapon **74** may communicate the state and mode information to local console **70** over communication network **29**. At block **385**, the availability of weapon **74** is checked. In particular, software **382** verifies that weapon **74** is not already assigned to remote console **72**. At block **386**, weapon **74** is checked for

faults or other errors. If any of the checks by software **382** in blocks **384**, **385**, and **386** fail, local console **70** does not obtain control of weapon **74**. Otherwise, the control of weapon **74** is assigned to local console **70** at block **204**. In one embodiment, main computer **28** provides some or all of the information verified by software **382** at blocks **384**, **385**, and **386** to local console **70** via communication network **29**.

At block **350**, the selector switch **302** (see FIG. **15**) of control circuitry **300** is toggled to the PORT position for controlling weapon **74**. At block **388**, two video sources are displayed on user interface **150**. In particular, software **382** instructs local console **70** to request a video feed from weapon **74** and a video feed from electro-optical device (sensor) **80** (see FIG. **7**) and to display both video feeds on user interface **150**. At block **389**, software **382** verifies that both video sources are displayed on user interface **150** by requesting confirmation from the operator. In one embodiment, a user input **170**, such as device input **177** of FIG. **14**, appears on the screen of user interface **150**. If the operator selects the user input **170** to confirm that both video sources are displayed, software **382** instructs local console **70** to transmit an enable signal to activate weapon **74**, as represented by block **242** of FIG. **19** (see also FIG. **12**). As described above with reference to FIG. **12**, the enable signal closes a switch (i.e. SW2) on safety interface **30** to activate weapon **74**, as represented by blocks **390** and **246**. In the illustrated embodiment, activating weapon **74** at block **242** enables weapon **74** to receive arm, charge, and firing commands from control circuitry **300** of local console **70**. If the operator does not confirm that both video sources are displayed on user interface **150**, control of weapon **74** is disabled at local console **70**.

As described above with reference to FIG. **17**, weapon **74** is armed at block **354**, charged at block **356**, and fire enabled at block **358**. As illustrated in FIG. **19**, software **382** contains instructions for checking the status of each arm, charge, and fire command. At block **391**, software **382** checks the status of the arm command (block **354**). In particular, local console **70** receives feedback from weapon **74** that weapon **74** received the arm command and that the weapon **74** is armed. If feedback from weapon **74** indicates that the arm command failed, or if the arm command was initiated out of sequence, the firing sequence is interrupted and, in one embodiment, control of weapon **74** by local console **70** is disabled. In the illustrated embodiment, weapon **74** remains armed as long as the arm switch **306** (see FIG. **15**) is closed, and opening arm switch **306** interrupts the firing sequence of weapon **74**.

Similarly, at block **392**, software **382** checks the status of the charge command (block **356**). In particular, local console **70** receives feedback from weapon **74** that weapon **74** received the charge command and that the weapon **74** is charged. If feedback from weapon **74** indicates that the charge command failed, or if the charge command was initiated out of sequence, the firing sequence is interrupted and, in one embodiment, control of weapon **74** by local console **70** is disabled. In the illustrated embodiment, weapon **74** remains charged for a predetermined time upon actuation of charge switch **304** (see FIG. **15**). In particular, if weapon **74** is not fire enabled within a predetermined time after engaging charge switch **304**, the firing sequence is interrupted.

Similarly, at block **393**, software **382** checks the status of the fire enable command (block **358**). In particular, local console **70** receives feedback from weapon **74** that weapon **74** received the fire enable command and that the weapon **74** is fire enabled. If feedback from weapon **74** indicates that the fire enable command failed, or if the fire enable command was initiated out of sequence, the firing sequence is interrupted and, in one embodiment, control of weapon **74** by local console **70** is disabled. In the illustrated embodiment, weapon **74** remains fire enabled as long as the fire enable switch **308** (see FIG. **15**) is closed, and opening switch **308** interrupts the firing sequence of weapon **74**.

At block **360**, the operator actuates trigger switch **314** (see FIG. **15**) to send a fire command to weapon **74**. As long as no faults occurred at weapon **74** and the fire command was received in sequence, weapon **74** fires in response to the actuation of trigger switch **314**. In addition, at block **394**, software **382** checks the firing status of weapon **74**. In particular, local console **70** receives feedback from weapon **74** that weapon **74** received the fire command and that the weapon **74** has fired. If feedback from weapon **74** indicates that the fire command failed, or if the fire command was initiated out of sequence, the firing sequence is interrupted and, in one embodiment, control of weapon **74** by local console **70** is disabled.

In one embodiment, software **382** of local console **70** contains instructions for ensuring that weapon **74** is not being used for "friendly fire", or firing upon an unintended target, based on feedback from weapon **74**. If at any point during the firing sequence it is determined that weapon **74** is engaging an unintended target, the firing sequence is interrupted and, in one embodiment, control of weapon **74** by local console **70** is disabled.

In one embodiment, all feedback communication from weapon **74** to local console **70** is transmitted over communication network **29** and managed by main computer **28**. In one embodiment, feedback communication from weapon **74** is transmitted directly to local console **70** via serial communication. Local console **70** may display this feedback on user interface **150**.

The word "console" as used herein is not intended to have a special meaning. Therefore, a "console" is any instrument panel, unit or system which controls and/or monitors mechanical, electrical or electronic devices as described herein.

While this invention has been described as having an exemplary design, the present invention may be further modified within the spirit and scope of this disclosure. This application is therefore intended to cover any variations, uses, or adaptations of the invention using its general principles. Further, this application is intended to cover such departures from the present disclosure as come within known or customary practice in the art to which this invention pertains.

The invention claimed is:

1. A system for coordinating control of an output device by a plurality of different operators, the system comprising:

a first control console having a first display and at least one operator operable device selection input to select at least one output device for control by the first control console and at least one device control input to control operation of at least one selected output device from the first control console;

a second control console spaced apart from the first control console, the second control console also having a second display and at least one operator operable device selection input to select at least one output device for control by the second control console and at least one device control input to control operation of at least one selected output device from the second control console; and

an input/output control system coupled to the first and second control consoles and to the at least one output device, the input/output control system being configured to receive signals from the device selection inputs and the device control inputs of the first and second control consoles;

wherein, in response to receipt of a device selection input signal for a selected output device from the first control console before receipt of a device selection input signal corresponding to the same selected device from the second control console, the input/output control system enables a device control input of the first control console corresponding to the selected device and disables the device selection input of the second control console corresponding to the selected device;

wherein, in response to receipt of a device selection input signal for the selected output device from the second control console before receipt of a device selection input corresponding to the same selected device from the first control console, the input/output control system enables a device control input of the second control console corresponding to the selected device and disables the device selection input of the first control console corresponding to the selected device;

wherein said first control console further comprises a first control section and said second control console further comprises a second control section, said first and second control sections are each adapted to determine that the selected output device is available for control and no faults or other conflicts have occurred in response to input of one of said device selection input signals from one of the first or second control consoles;

wherein the input/output control system includes an interface circuit coupled between the first and second control consoles and the at least one output device, said interface circuit includes a third control section configured to selectively link the first or second control consoles to the at least one selected output device, the third control section being configured to selectively block said device control signals transmitted by one of the first and second control consoles through said interface circuit such that said selected at least one output device can only receive said device control signals from one of said control consoles through said interface circuit at a time;

wherein said first control console further comprises a fourth control section and said second control console further comprises a fifth control section, said fourth and fifth control sections are each adapted to respectively couple said device control inputs of said control consoles with said interface circuit, wherein said input/output device enables one of said device control inputs of the first or second control console by providing power to one of said fourth or fifth control sections when one of said first or second control sections makes said determination that the selected output device is available for control and no faults or other conflicts have occurred.

2. The system of claim **1**, wherein the input/output control system is configured to automatically send an activation signal from the input/output system to the selected output device in response to receipt of said device selection input signal for the selected output device from one of the first and second control consoles, thereby permitting control of the activated output device by one of the first and second control consoles.

3. The system of claim **1**, wherein the device selection inputs of the first and second control consoles are normally enabled inputs, and wherein the device control inputs of the first and second control consoles are normally disabled inputs.

4. The system of claim **1**, wherein the device selection inputs and the device control inputs of the first and second control consoles are one of a button, a switch, a virtual button on a graphical user interface, a computer mouse and a joy stick.

5. The system of claim **1**, wherein the device control inputs of the first and second control consoles include a first control input to activate the selected output device from the first and second control consoles and a second control input to control operation of the activated selected output device from the first and second control consoles.

6. The system of claim **5**, wherein the input/output control system is configured to automatically send an activation signal from the input/output system to the selected output device in response to receipt of a signal from a first control input, thereby permitting control of the activated output device by a corresponding second control input.

7. The system of claim **5**, wherein the input/output control system is configured to receive signals from the first and second control inputs of the first and second control consoles, the input/output control system being configured to transmit signals to the selected output device to activate and control the selected output device in response to the signals from the first and second control inputs, respectively.

8. The system of claim **1**, wherein, in response to receipt of a device selection input signal for a selected output device from the first control console before receipt of said device selection input signal corresponding to the same selected device from the second control console, the input/output control system enables monitoring of the selected device on the display of the first control console and disables monitoring of the selected device on the display of the second control console, and wherein, in response to receipt of a device selection input signal for the selected output device from the second control console before receipt of a device selection input corresponding to the same selected device from the first control console, the input/output control system enables monitoring of the selected device on the display of the second control console and disables monitoring of the selected device on the display of the first control console.

9. The system of claim **8**, wherein said disabling of monitoring of the selected device on the display on the second console comprises replacing a first representation of said monitoring on said display with an altered representation of said first representation of said monitoring on said display.

10. The system of claim **1**, wherein the third control section is a diode array configured to link the first and second control consoles to the at least one output device, the diode array being configured to block signals transmitted by one of the first and second control consoles from being received by the other of the first and second control consoles.

11. The method of claim **10**, further comprising automatically activating the at least one selected output device in response to receipt of a device selection input signal to permit control of the activated output device by the one of the first or second control consoles.

12. The method of claim **10**, wherein the device selection inputs of the first and second control consoles are normally enabled inputs, and wherein the device control inputs of the first and second control consoles are normally disabled inputs.

13. The method of claim **10**, wherein the device selection inputs of the first and second control consoles are one of a button, a switch, a virtual button on a graphical user interface, a computer mouse and a joy stick.

14. The method of claim **10**, wherein the device control inputs and the device control inputs of the first and second control consoles include a first control input to activate the selected output device from the first and second control consoles and a second control input to control operation of the activated selected output device from the first and second control consoles.

15. The method of claim 14, further comprising automatically sending an activation signal to the selected output device in response to receipt of a signal from a first control input, thereby permitting control of the activated output device by a corresponding second control input.

16. The method of claim 14, further comprising receiving signals from the first and second control inputs of the first and second control consoles; and automatically transmitting signals to the selected output device to activate and control the selected output device in response to the signals received from the first and second control inputs, respectively.

17. The system of claim 1, wherein the interface circuit, the first control console, and the second control console are coupled to a computer via a communication network, and wherein the interface circuit, the first control console, the second control console and the computer are each configured to communicate with one another via the communication network.

18. The system of claim 17, further comprising an output module coupled to the communication network and configured to receive network signals from the first and second control consoles over the communication network and to transmit corresponding signals to the third control section.

19. The system of claim 18, further comprising an input module coupled to the communication network, the input module being configured to monitor signals transmitted from the first and second control consoles to the output device and to transmit corresponding signals to the computer via the communication network to provide remote system monitoring.

20. The system of claim 19, further comprising a network module configured to provide a communication link between the communication network, the input module and the output module.

21. The system of claim 1, wherein the input/output control system includes a plurality of switches configured to transmit signals from the first and second control consoles to the at least one output device.

22. The system of claim 1, wherein the first and second control consoles are each configured to control a plurality of different output devices, the input/output control system providing communication between the first and second control consoles and the plurality of output devices.

23. The system of claim 1, wherein said graphical user interface is configured to display data received from a selected output device, the least one device selection input and the at least one device control input being provided on the graphical user interface of the first and second control consoles.

24. The system of claim 1, wherein the at least one output device is one of a sensor, a light, and a lethal effector.

25. A system as in claim 1, wherein said first control console is adapted to have a plurality of device selection and device control inputs adapted to control operation of a plurality of output devices comprising said selected output device and an unselected output device.

26. A system as in claim 25, wherein said input/output device comprise a plurality of electrical switches adapted to physically decouple an electrical circuit from said control consoles from said plurality of output devices until said input/output device has power applied to it.

27. A system for coordinating control of an output device by a plurality of different operators, the system comprising:

a first control console having at least one device selection input to select at least one output device for control by the first control console and at least one device control input to control operation of at least one selected output device from the first control console;

a second control console spaced apart from the first control console, the second control console also having at least one device selection input to select at least one output device for control by the second control console and at least one device control input to control operation of at least one selected output device from the second control console;

means coupled to the first and second control consoles and to the at least one output device for receiving signals from the device selection inputs and the device control inputs of the first and second control consoles;

means for enabling a device control input of the first control console corresponding to the selected device and for disabling the device selection input of the second control console corresponding to the selected device in response to receipt of a device selection input signal for a selected output device from the first control console before receipt of a device selection input signal corresponding to the same selected device from the second control console; and

means for enabling a device control input of the second control console corresponding to the selected device and for disabling the device selection input of the first control console corresponding to the selected device in response to receipt of a device selection input signal for the selected output device from the second control console before receipt of a device selection input corresponding to the same selected device from the first control console;

wherein said first and second control console each respectively comprise first and second control sections, said first and second control sections are adapted to communicate with each other, said first and second control sections are adapted to determine if said selected device is available for control and determine if a predetermined condition exists comprising a fault or conflict condition prior to said device selection input signal being sent by one of said first and second control consoles.

28. The system of claim 27, wherein the first and second control consoles each include a display to enable user control of said at least one output device and permit a user to monitor operation of the at least one output device, and further comprising:

means for enabling monitoring of a selected device on the display of the first control console and for disabling monitoring of the selected device on the display of the second control console in response to receipt of a device selection input signal for a selected output device from the first control console before receipt of a device selection input signal corresponding to the same selected device from the second control console; and

means for enabling monitoring of the selected device on the display of the second control console and for disabling monitoring of the selected device on the display of the first control console in response to receipt of a device selection input signal for the selected output device from the second control console before receipt of a device selection input corresponding to the same selected device from the first control console.

* * * * *