Naval Surface Warfare Center (NAVSEA) Crane Division
Miniature Cryogenic Shutter Assembly (Patent # 6,995,391)

Mini Market Study Report

August 2011

Sponsored by:
Integrated Technology Transfer Network, CSUSB

Integrated Technology
ITTN
Transfer Network
Fusing Science with Business

Prepared by:
NAVSEA Crane Market Study Analyst
Channing Carter, Business Consultant

Distribution Statement A: Approved for Public Release; Distribution is Unlimited

MARKET STUDY REPORT

Technology Synopsis

Infrared cameras are used in many situations for imaging heat (temperature or intensity). You can cool down the image sensor in the camera in order for it to be much more sensitive, so that the camera can see very faint sources of heat, such as in space, or so that the camera can distinguish very small differences in temperature. These cameras are known as cryogenic or cooled cameras. You can further increase the dynamic range, i.e. the ability of the camera to see very cool and very hot objects simultaneously without getting "blinded." This is accomplished by using a technique called super-framing, in which the camera overlays multiple images in real time. In order to obtain optimal images when you perform real-time super-framing, the picture sequence must begin with a "black" image. The cryogenic shutter allows the camera to easily take this "black" or zero radiance image, which allows the camera to perform an "absolute measurement calibration".

The key challenge in developing this innovative shutter was the design restrictions. The shutter has to fit into a very tight space inside the camera, on the cooled sensor assembly and has to be able to function mechanically in this very low temperature environment. This invention allows the smaller and medium format cameras to perform the super-imaging tasks that previously could only be done by larger and much more expensive cameras. Key applications include research labs, military equipment using real-time heat imaging, and space applications.

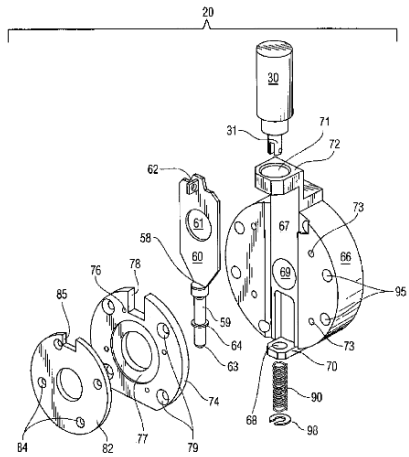

Potential Applications

Industry Segments	Market Size	Application Segments
Military	$3.3 billion	1. Missile detection and defense 2. Surveillance: Subjects of surveillance are obscured by ground fires or other thermal camouflage.
Space	- $8.9 billion spent on	3. Satellites/Telescopes: Infrared

	missile defense agency -$5.6 billion on commercial satellite building	images and spectroscopic observations of stellar phenomena 4. To study the Earth's weather during both the day and night 5. Missile defense
Commercial	$1.5 billion	1. Thermography: Surveillance: Subjects of surveillance are obscured by ground fires or other thermal camouflage.

Competing Technologies

Product	Features
Mini Cryogenic Shutter Assembly	-Zero radiance referencing. -Operates reliably when subjected to cryogenic conditions. -Adapted for use in small or medium format cryogenically cooled infrared cameras. -Small in physical size and lightweight. -Fabricated of strong and lightweight materials for optimum durability and longevity. -Requires minimum voltage pulse for actuation. -Provides a reference for absolute measurement of scene radiance. -Removes all radiance from an object midwave (3-5 micrometers)and long wave (8-12 micrometers).
Low Power Cryogenic Shutter Mechanism	-The Infrared Array Camera (IRAC) shutter mechanism provides precise, repeatable, limited angular motion ideal for infrared sensing cryogenic instruments. - The unique design of the actuator enables the shutter to dissipate very low power during operation. - Will survive and operate throughout all stages of the IRAC mission and remain operable in the post-cryogen environment of the spacecraft.
Cryogenic Shutter	-Functions in cryogenic or cryogenic zero gravity environments. -Prevents the mirror or other target object from being directly exposed to radiation. -Nylon bearing system is utilized to prevent the device from binding during operation.
Two-dimensional MEMS microshutter arrays (MSA)	-Used in cryogenic environments as low as 35K. -Designed for the selective transmission of light with high efficiency and high contrast. -Carried by the

Distribution Statement A: Approved for Public Release; Distribution is Unlimited

Competitive Advantage

The miniature cryogenic shutter assembly's competitive advantage is that it is the only shutter that has super-framing capabilities as well as operates reliably in cryogenic environments, whereas conventional camera shutter mechanisms do not. In addition, the shutter mechanism when actuated provides the infrared radiation sensor (imaging system) with a view of very low temperature surface in order to calibrate the zero radiation reference level in the imaging system. No such apparatus exists on small or medium sized cameras other than the miniature cryogenic shutter assembly that relies on an absolute measurement of scene radiance.

Market Opportunity

Kadel Engineering has close to 100% market share of the global dewar market, and we view the cryogenic shutter assembly to be a component in dewars. Since 1976, Kadel Engineering has manufactured over 75,000 dewars; on average that's about 2,000 per year. If we assume that their production has increased it would be fair to assume that Kadel manufactures about 4,000 dewars per year. The shutter would be a component in some dewars (not all are for small to medium sized cameras). Therefore, about 400 dewar units are a fit for the shutter. The reachable market may be a few units per year considering that those who need this shutter require real-time super-framing as well as a high temperature dynamic range for research, space, or military applications.

Potential Targets for Licensing

In regards to licensing this technology, a variety of major players had to be sought out. Top companies that are worth pursuing to license the Miniature Cryogenic Shutter Assembly to are **Kadel Engineering, Raytheon, Infrared Laboratories and FLIR.**

- **Kadel Engineering** is recognized as a leading vendor of cryogenic equipment for scientific, industrial and research applications. Our considerable experience includes the manufacturing of over 75,000 dewars. They manufacture cryogenic storage and transfer equipment for both liquefied nitrogen and helium.
- **Raytheon Space and Airborne Systems (SAS)** is a leading provider of sensor systems giving military forces the most accurate and timely actionable information available for the network-centric battlefield. For decades, they have supported military and civil customers with focused, forward-looking technology, and today we are playing an increasing role in mission systems integration.[1]

[1] http://www.raytheon.com/businesses/rsas/index.html

- **Infrared Laboratories** has been the world's premier designer, supplier and integrator of cryogenic systems and IR detectors for demanding ultra-low light level (or background limited) applications in astronomy, scientific research and, under our subsidiary IRLabs, for the semiconductor industry. They specialize in providing infrared camera systems and cryogenic solutions that low cost, low size and weight, low noise, and high reliability.[2]
- **FLIR Systems Inc.,** is a leading manufacturer of innovative imaging systems that include infrared cameras, aerial broadcast cameras and machine vision systems.

Keys to Commercialization

- **View the assembly as an individual component that can be incorporated into small and medium format cryogenically cooled infrared cameras.**
- **Contact :**
  - **Tim Weiss at Kadel Engineering (317-745-2798)** to find out if they would be interested in adding the shutter to their Dewar as an option with a marketing and sales plan already in place.
  - **Co-Inventor, Roy Loma (Roy Loma Engineering)** to find out what it would take to produce a commercial shutter and if he would be interested in manufacturing them.
  - **Follow up with Raytheon (Christopher J. Bencal, 978-858-5715) and Infrared Laboratories (Dave Billister, 520-622-7657)** for space applications (satellites/telescopes, missile defense).
  - **FLIR Systems** to see if they would be interested manufacturing or being a licensee of this technology.
  - **Attend the SPIE Defense, Security, and Sensing Conference.**
    - The industry's leading exhibition with 500 top defense, security, and sensing contractors, suppliers, and integrators.
    - April 23-27, 2012 at the Baltimore Convention Center in Baltimore, Maryland, USA

[2] http://www.infraredlaboratories.com/About.html

Appendices

The United States of America Department of the Navy

Inventor: Eric Hillenbrand
Phone: 812-854-3417
Email: eric.hillenbrand@navy.mil

Background information:

NSWC Crane is one of 10 Surface Warfare Center Divisions within the Naval Sea Systems Command (NAVSEA). NSWC Crane provides comprehensive support for complex military systems in three focus areas: Strategic Missions, Electronic Warfare/Information Operations and Special Missions. NSWC Crane delivers technical solutions directly into the hands of the Warfighter, ensuring safer missions and saving lives.

This market study is for the Miniature Cryogenic Shutter Assembly. The miniature cryogenic shutter assembly is used in infrared imaging systems to calibrate the camera using an "absolute measurement" of scene radiance. This technology solves the major technical challenge of calibrating zero radiance on small and medium-sized cameras in cryogenic environments. The use of absolute measurement calibration overcomes some of the limitations posed by using relative measurement calibration. This is of particular importance to certain applications, such as imaging for infrared seeking missiles. This calibration technology is particularly beneficial for smaller and medium-sized cameras, whereas larger and more complex cameras currently do not pose the same calibration challenges. The IP for this technology is protected under U.S. Patent No. 6,995,359 B1.

The purpose of this interview is to talk to the inventor to gain a deeper understanding of the technology, the background of why it was invented and what their internal need was, how the technology is fielded and what has the experience been so far, has it been commercialized and if so what are the details, how has it been marketed, who has shown interest and what have the discussions and concerns been, what do the inventors see as the key advantages and market potential, and what applications and first beta customers would the inventors consider?

<u>Key questions and answers:</u>

Q. What are the key advantages of your technology in comparison to current technologies on the market?
A: There is no other technology like this on the market. Uniblitz has some comparable technologies that operate at room temperature for commercial purposes. My technology's key advantage has zero radiance reference when it comes to imaging.

Q. What is the closest competing technology that you are aware of?
A: Nahum Gat, has his own company called OptoElectronic Sciences. Gat's mechanism changes the stop diameter on the beam. In addition, his mechanism provides a filed stop variation. Ghat has been trying to commercialize his technology for years but no one has showed interest. Piezoelectronic has an iris Assembly (cryogenic camera iris) is somewhat similar.

Q. Who are the specific end-users of this technology?
A: Military personal, builders of super frame imagers also known as high dynamic range imaging. Infrared camera manufacturers that could benefit from this technology include Santa Barbara Focal Plane and FLIR imagers. I suggest that you target the smaller camera manufacturers first because they will probably be more likely to accept my idea.

Q. Do you see any other potential applications for your technology besides tracking the location of missiles?
A: Laser applications, satellite applications, telescopes, night vision systems, thermography. Any optical mechanism that you have to throw into place quickly (optical filters, lenses). The market is not large, the shutter assembly was made for a specific military application. The shutter assembly has not been used in the military. The shutter assembly application has to be very rapid but not long-lived.

Q. Are you aware of any manufacturers of calibration devices for infrared cameras, specifically for heat seeking missiles?
A: Santa Barbara Focal Plane (Lockheed Martin Fire Control Systems), FLIR (commercial), Nova Sensor, Raytheon, Mikeron, appeal to smaller manufacturers first.

Q. How often is your shutter used to calibrate the camera? Is it every time you take a picture? Do you remove the shutter once you calibrate the camera?
A: Yes, it's used in the calibration process. It supplies the null (minimum) reference level of the camera (it removes the signal arising from the electronics from the total signal level). It is used at the beginning of every image sequence (not every frame).

Q. Are there any limitations of the cryogenic shutter assembly?

A: Minimum volume design. When you try to build minimum volume design you get thermal gapping. Therefore, you get thermal shorts and the cold runs out into the warm and it messes up the calibration. Mechanical constraints would occur when you try to commercialize the shutter assembly. The shutter would be more bulky thus taking away from the design. The shutter had to be built as thin as possible. People like FLIR would bulk it up if they were to commercialize it. Even though the shutter would be bulky it will still be able to operate under cryogenic conditions. Another limitation ensues when you try to convince people that they need the shutter assembly.

Q. Has the cryogenic shutter assembly been prototyped/tested?
A: Yes and it costs $6,000 to prototype. I have a lot of prototypes in my office and I am willing to show you.

Q. How much does the cryogenic shutter assembly cost to manufacture?
A: $1,000

Q. What has been done so far to commercialize the cryogenic shutter assembly i.e. conferences, publications, etc.?
A: It's been taken to Santa Barbara Focal Plane but they showed no interest other than saying that it was a neat technology.

Q. How would you envision this technology being brought to market?
A: I would bring my technology to market for super framing. It is an adjunct to a radiometric imager. Only important if you are doing absolute radiometry.

Q. Is there currently any potential interest from others? If so who?
A: No, only Santa Barbara Focal Plane said that it was a neat technology.

Q. Why don't larger cameras have a problem measuring zero radiance?
A: They can't measure zero radiance either. Larger cameras tend to use external reference because volume is not an issue.

Q. I know you said that with this shutter you can now calibrate small and medium format cameras. What's the advantage of using a small or medium sized camera compared to a large camera?
A: The only issue with large format cameras was the size of the cold stop on the shutter itself (I think it was built to a 13mm requirement).

Distribution Statement A: Approved for Public Release; Distribution is Unlimited

Q. What do you consider a small, medium and large-sized camera?
A: I consider small and medium-sized to be commercial imagers (cameras). Large-sized would be satellite imagers, Hubble imagers.

Q. Can your shutter be used in uncooled cameras as well.
A. Yes, even though it was made for a cooled camera (two band imaging system/dual chrome) it can still be used in uncooled cameras. The shutter mechanism would not be difficult to put on a commercial camera. Mechanism was essential for dual chrome but is can used on monochrome super frame cameras which are currently on the market

Q: Would you like to see the smaller shutter mechanism or the medium-sized one commercialized first and why?
A: It doesn't matter, small and medium will be about the same size for utility and volume. Ideally you would like the shutter mechanism to be the size of a film can.

Q. Are there any testimonials from users of your technology or individuals that can provide adequate feedback?
A: No.

Key Observations
6/27/11 Channing Carter

- Idea of shutter assembly: to provide a null reference off-set: a target that has no reading in the infrared. It is dark, absolutely dark because it is running at about 100 kelvin. There is no radiance in band.
- The technique that describes the necessity of using the shutter is in the two band patent
    - Shutter assembly wasn't the end product. In order for the two band to work you have to the cryogenic shutter assembly.
    - The shutter assembly was built for the two band imaging camera
- You take the shutter and build the entire system to commercialize it.
- There is a commercial need for an assembly like this. Thermal imaging is thought to be better television, not thought of as a true imaging application.
- To help me figure out potential applications I would have to figure out who outside military is concerned with absolute radiance imaging.
- Stressed that the shutter assembly is a scientific application. Anyone who needs to figure out how much electronic drift you have to have in the system would benefit from this technology.
- The cameras that his shutter would go on are 100,000 - 200,000 dollar cameras.
- Look at the market for infrared cameras.
- The shutter assembly is a limited volume market technology.
- Inventor wasn't building products but rather tools. They have to be marketed as industrial items or medical items.

Distribution Statement A: Approved for Public Release; Distribution is Unlimited

- People don’t realize that thermal imaging can be used during the day.
- The shutter mechanism would not be difficult to put on a commercial camera.
    - Mechanism was essential for dual chrome but is can used on monochrome super frame cameras which are currently on the market.
    - Inventor explained why it was necessary for a shutter to be used on monochrome focal plane camera in getting a super frame image but Santa Barbara Focal Plane was not interested. Mind you, Santa Barbara invented super frame and didn’t have super frame images.
    - Shutter fits exactly on Santa Barbara cameras because it was prototyped on those cameras.
- Look for people who build lab cameras.