US008444078B1

(12) **United States Patent**
Brown et al.

(10) **Patent No.: US 8,444,078 B1**
(45) **Date of Patent: May 21, 2013**

(54) **CABLE REEL**

(75) Inventors: **Larry C. Brown**, Odon, IN (US); **Phillip S. Mitchell**, Springville, IN (US); **Joseph Ringwald**, Loogootee, IN (US)

(73) Assignee: **The United States of America as represented by the Secretary of the Navy**, Washington, DC (US)

(*) Notice: Subject to any disclaimer, the term of this patent is extended or adjusted under 35 U.S.C. 154(b) by 293 days.

(21) Appl. No.: **12/926,448**

(22) Filed: **Nov. 18, 2010**

Related U.S. Application Data

(63) Continuation-in-part of application No. 11/314,884, filed on Dec. 23, 2005, now abandoned.

(51) **Int. Cl.**
B65H 75/40 (2006.01)

(52) **U.S. Cl.**
USPC **242/403**

(58) **Field of Classification Search**
USPC 242/388, 395, 395.1, 398, 403, 403.1, 242/588, 557, 400, 406, 399, 388.1, 388.6; 248/346.01, 676, 80, 220.22, 220.21, 222.51, 248/289.11, 329; 384/428, 424, 295, 276, 384/275, 416–420
See application file for complete search history.

(56) **References Cited**

U.S. PATENT DOCUMENTS

294,843	A *	3/1884	Belford	242/403.1
3,976,260	A *	8/1976	Irik	242/403
4,706,906	A *	11/1987	Roman et al.	242/401
5,588,613	A *	12/1996	Nagy	242/395
5,775,621	A *	7/1998	Sauber	242/391.1
2004/0245362	A1 *	12/2004	Ast et al.	242/388.6

* cited by examiner

Primary Examiner — William E Dondero
(74) *Attorney, Agent, or Firm* — Christopher A. Monsey

(57) **ABSTRACT**

The invention involves a novel configuration for a cable reel and two discs. The discs are disposed on opposite sides of the spool and the two discs are able to spin independently from the spool.

27 Claims, 9 Drawing Sheets

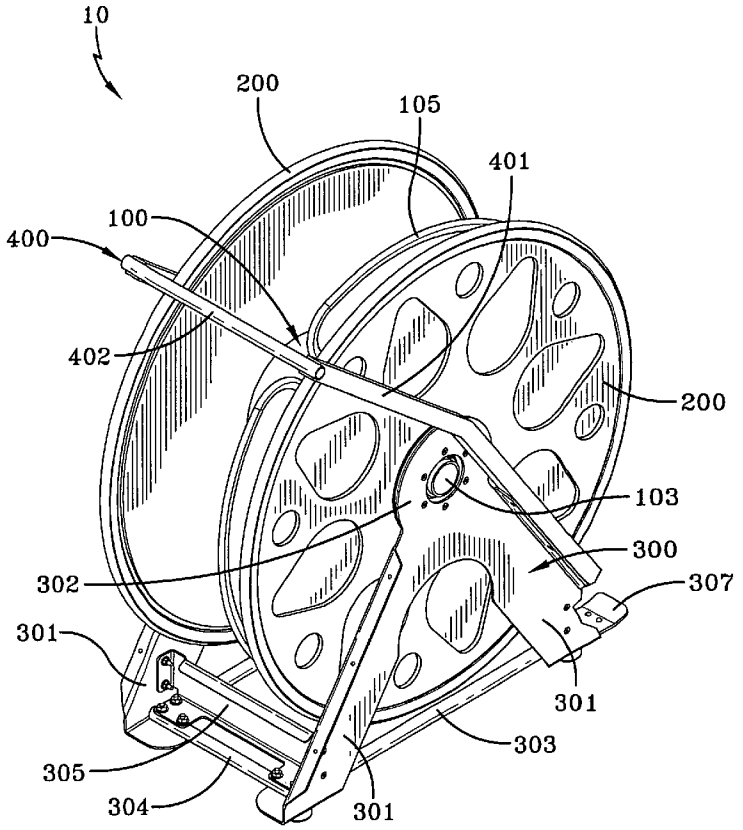

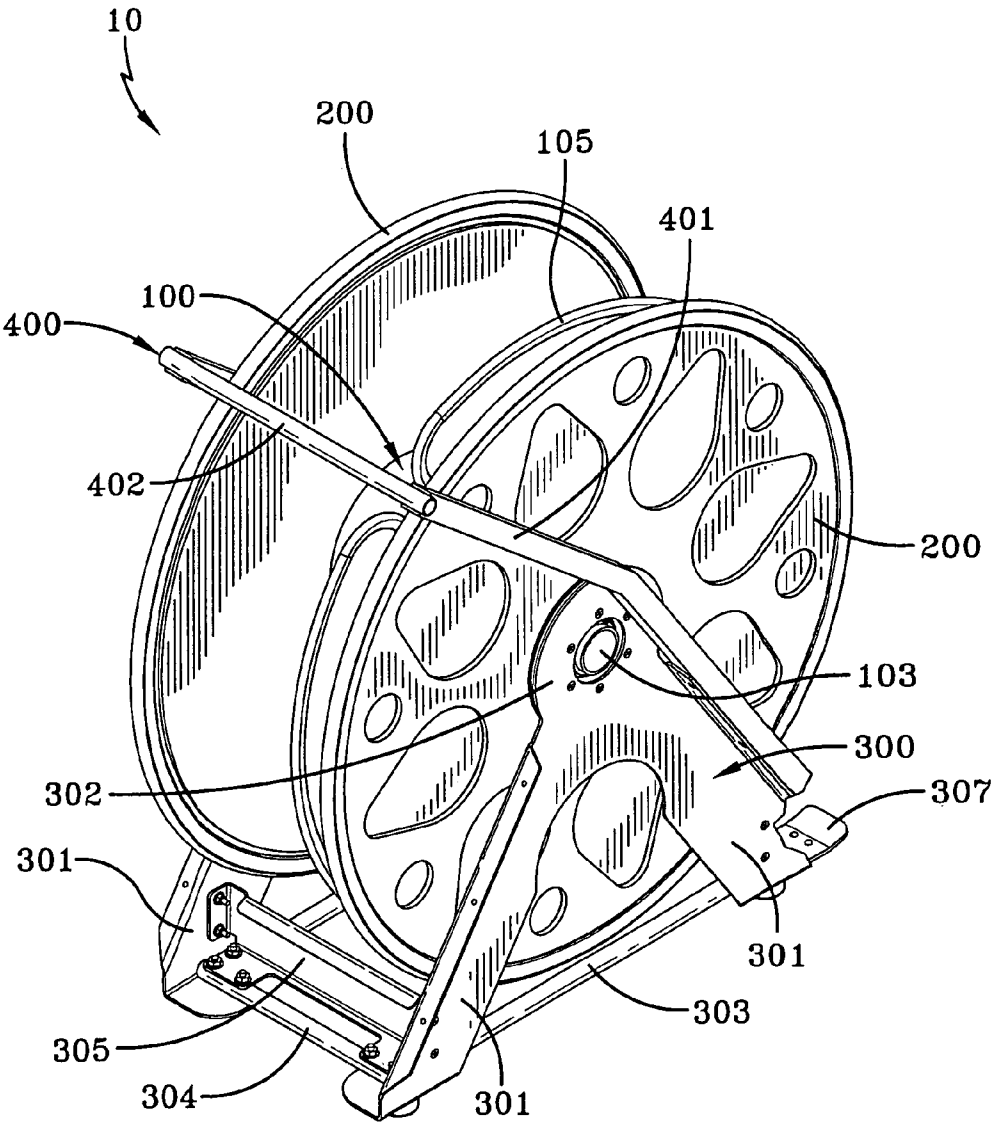
10
200
105
401
100
400
402
200
103
300
302
307
301
301
303
305
304
301

FIG-1

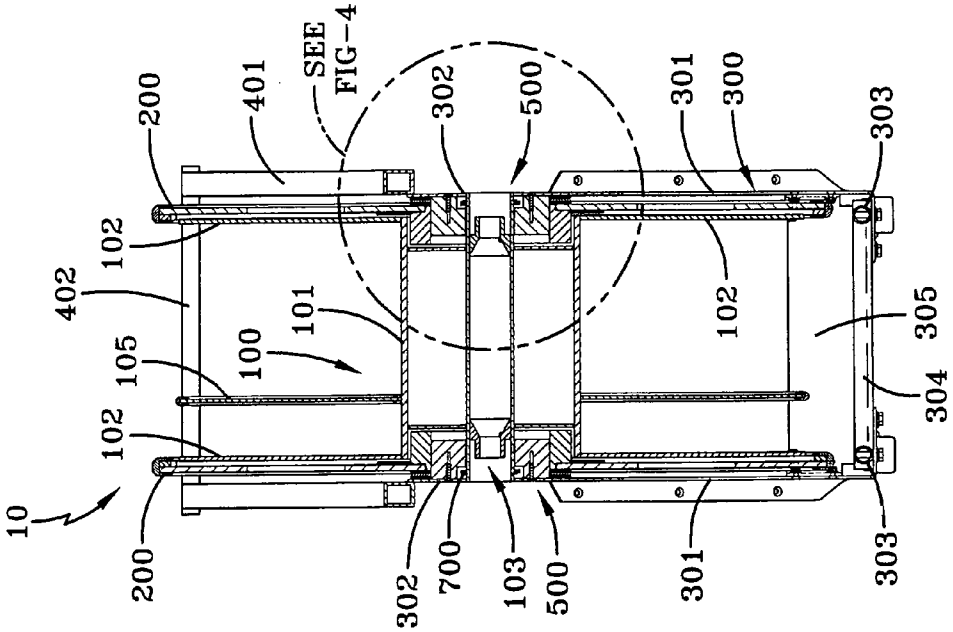
10
200
102
105
402
100
101
401
SEE FIG-4
302
500
301
300
303
305
304
102
200
302
700
103
500
301
303

FIG-3

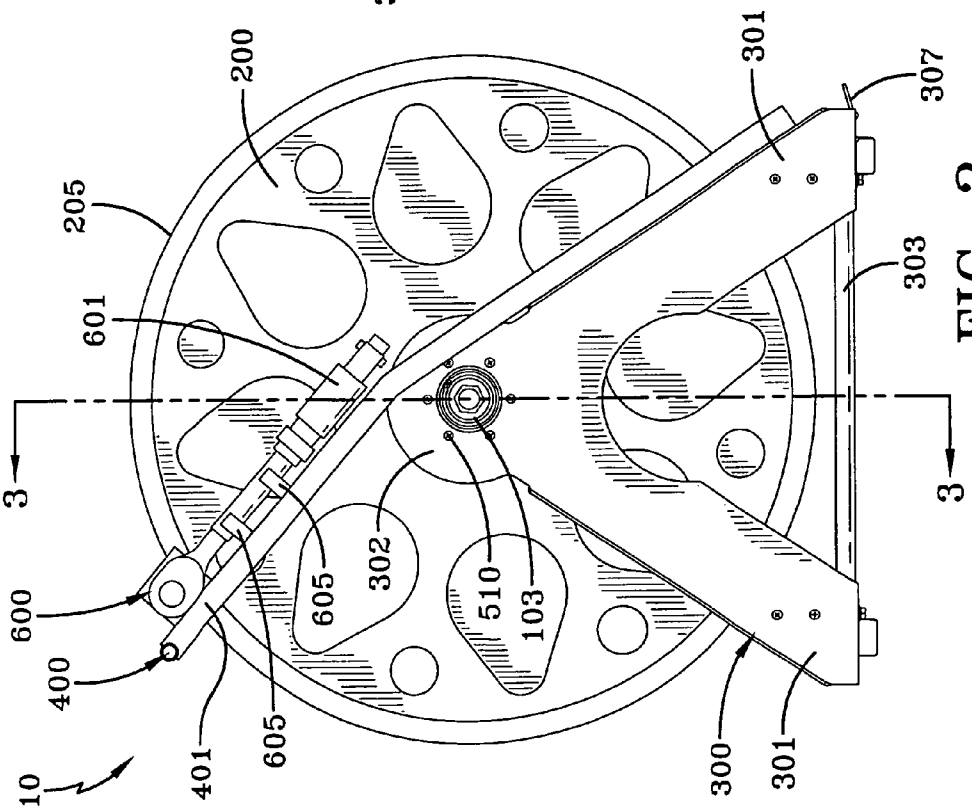
10
400
600
401
605
605
601
205
200
302
510
103
301
307
303
300
301
3
3

FIG-2

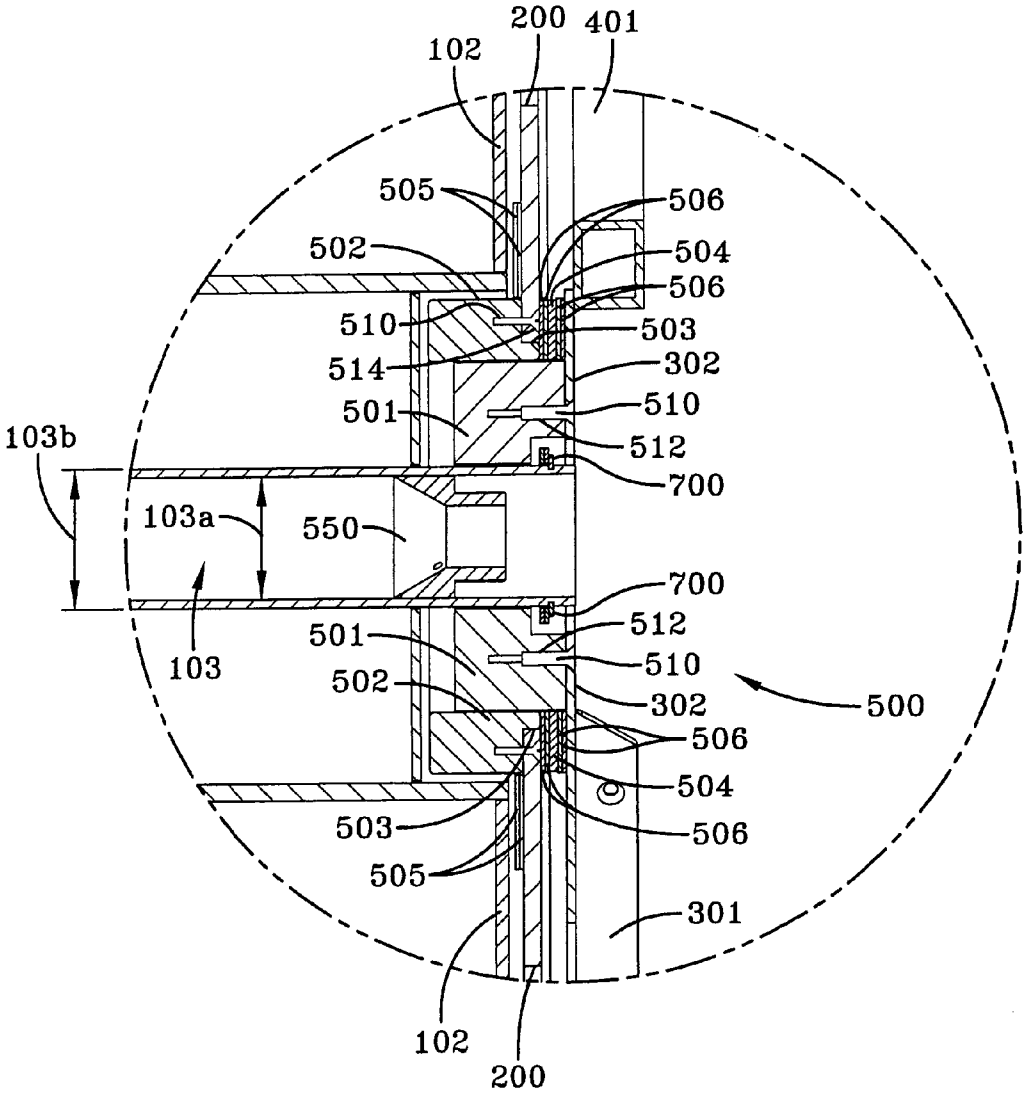
200
401
102
505
506
502
504
506
510
503
514
302
501
510
512
103b
700
103a
550
700
512
501
510
103
502
302
500
506
504
503
506
505
301
102
200

FIG-4

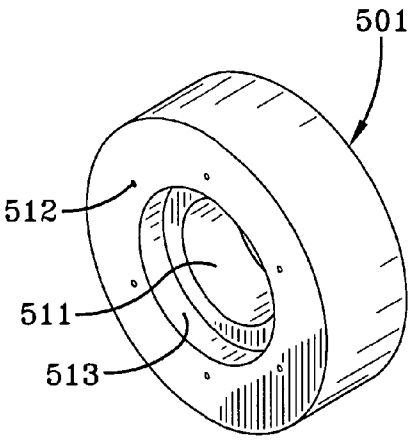

FIG-5

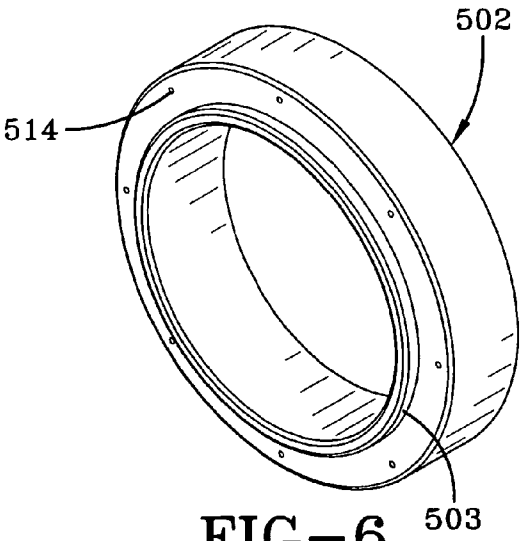

FIG-6

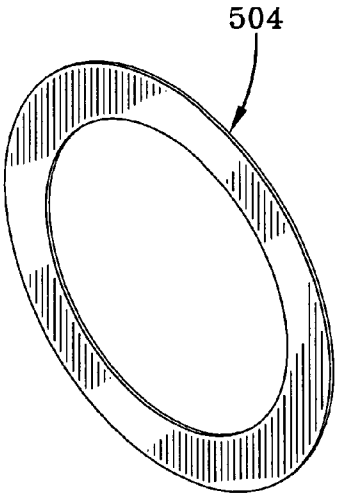

FIG-7

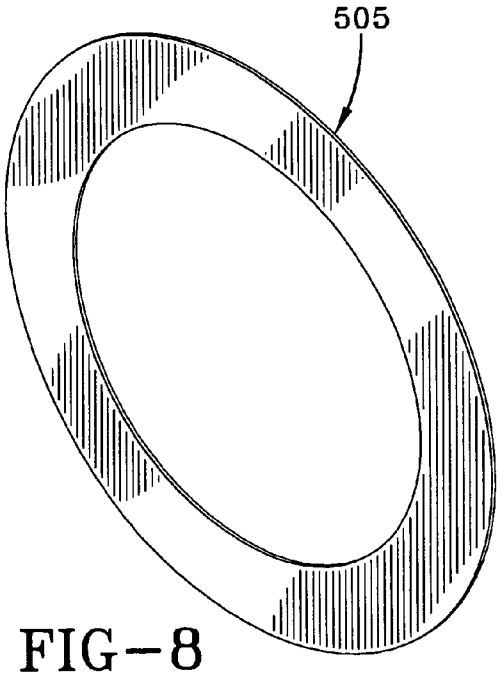

FIG-8

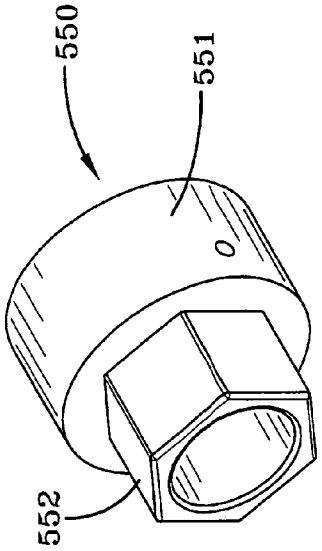

FIG–9A

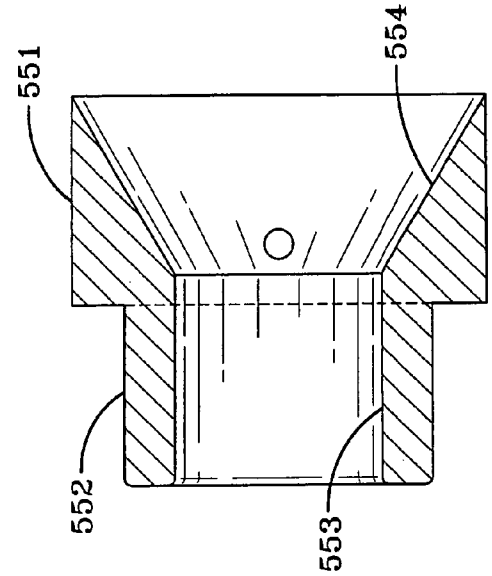

FIG–9C

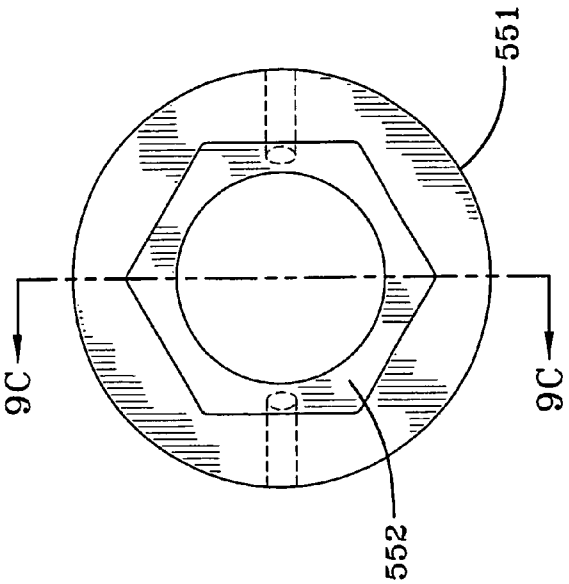

FIG–9B

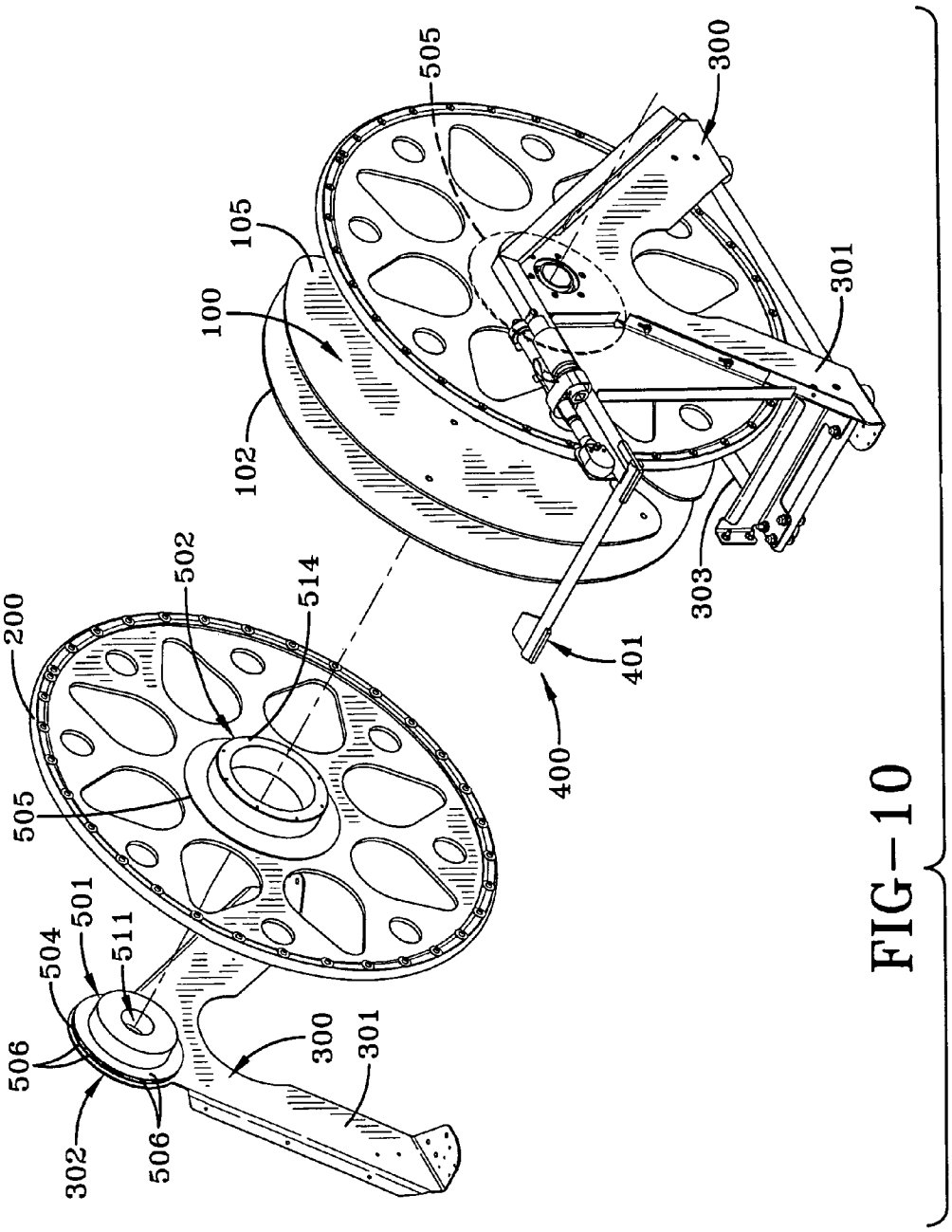
505
300
105
100
301
102
303
502
514
200
401
400
505
501
511
504
506
300
301
302
506

FIG-10

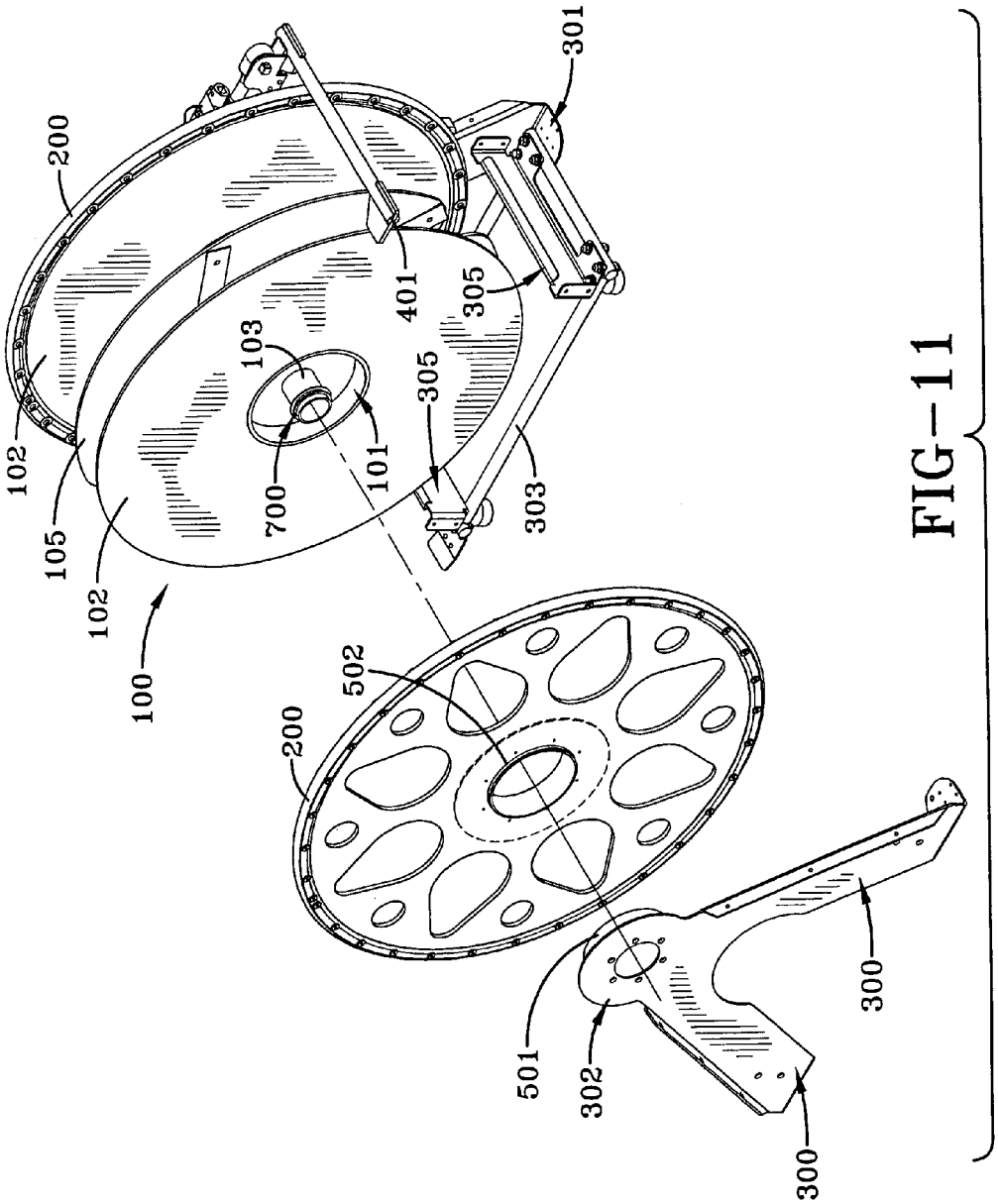
200
102
105
102
100
103
700
101
305
401
305
301
303
200
502
501
302
300
300

FIG-11

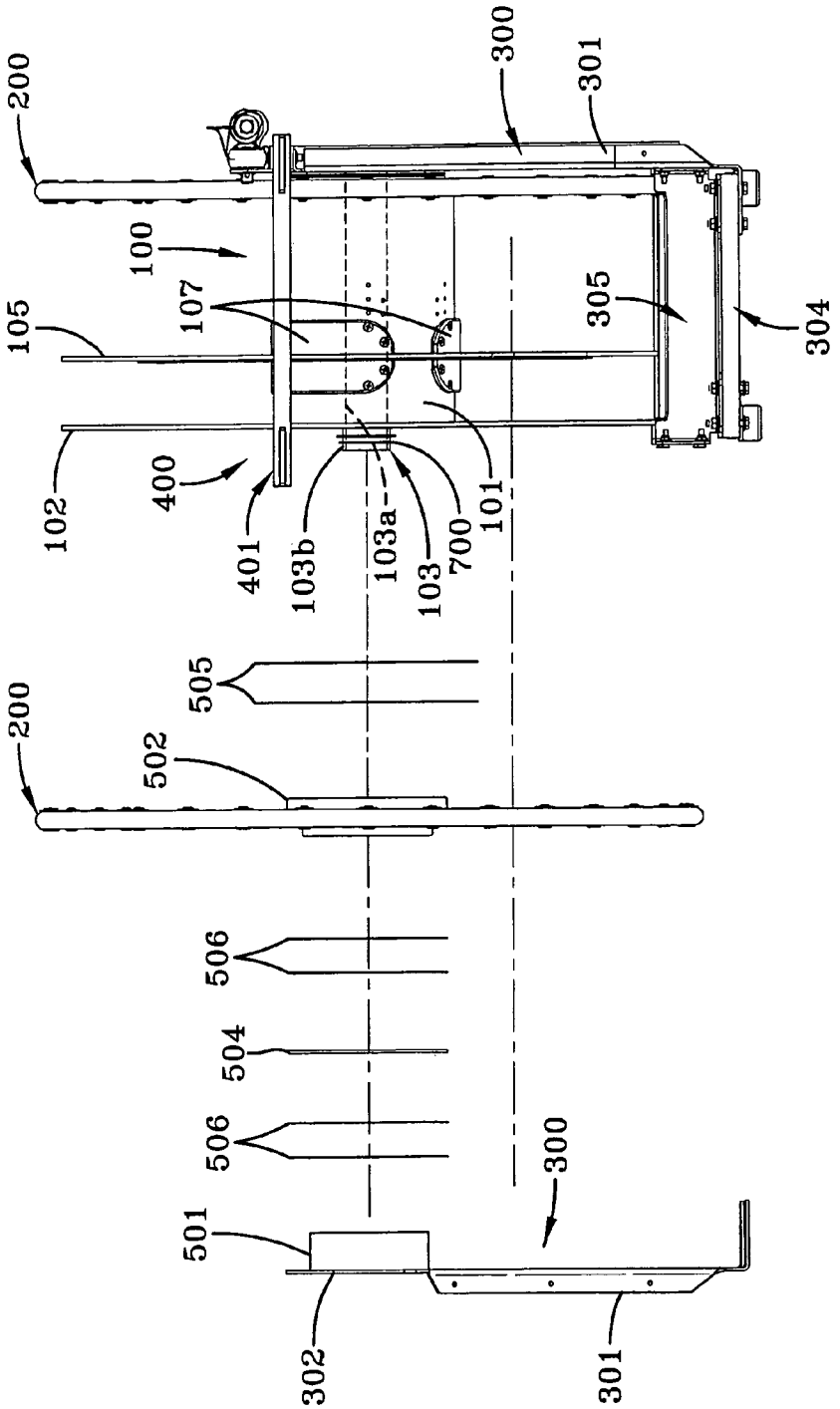
200
100
105
107
102
400
401
103b
103a
103
700
101
300
301
305
304
200
505
502
506
504
506
501
302
300
301

FIG-12

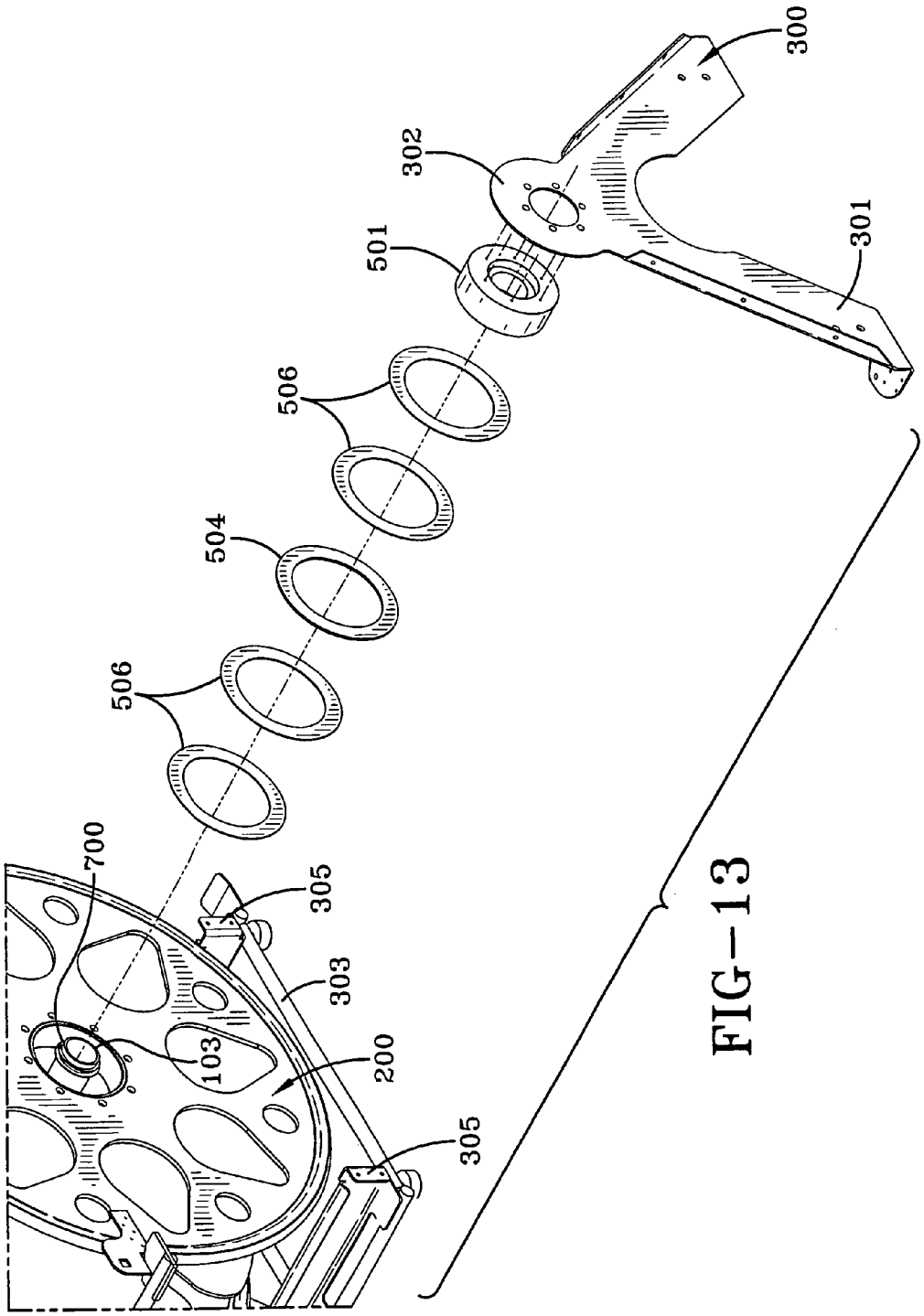

FIG-13

CABLE REEL

This application is a continuation in part of application Ser. No. 11/314,884 filed Dec. 23, 2005 now abandoned.

STATEMENT OF GOVERNMENT INTEREST

The invention described herein may be manufactured and used by or for the Government of the United States of America for governmental purposes without payment of any royalties thereon or therefor.

BACKGROUND

The present invention relates to a cable reel. More specifically, but without limitation, the present invention relates to a cable reel suited for one hundred pound fiber optic cable.

Currently the United States military stores fifteen hundred meter, one hundred pound fiber optic cable on a reel that has a center made of four rods. The cable is wound around the four rods, which bends the cable at about 90 degrees, causing signal loss and permanent deformation to the cable. In order to deploy the cable, a rod must be placed in the center hub of the spool and held at each end by two people while a third person unrolls or rewinds the cable. This utilizes valuable manpower and time, especially in a military environment. Often the spool is rolled on the ground to deploy the fiber cable, which damages the fragile cable due to spool hub and rim diameter differential.

Thus, there is a need in the art to provide a spool without the limitations inherent in present methods.

SUMMARY

The present invention is directed to a cable reel including a spool and two discs. The discs are disposed on opposite sides of the spool, and the two discs are able to spin independently from the spool.

It is a feature of the invention to provide a cable reel that allows cable to be deployed by one person.

It is a feature of the invention to provide a cable reel that allows easier rewinding, specifically to allow rewinding with a hand crank while the reel is stationary or rolling on the ground, or in the back of a moving vehicle.

It is a feature of the invention to provide a cable reel that reduces failures, increases the capability of the cable by protecting its inherent qualities, increases mean time between failures, reduces the amount of manpower required to employ these cables and reduce set up time and tear down time.

It is a feature of the invention to provide a cable reel that allows easier deployment of a cable, specifically without stretching or dragging cable due to circumference differential of reel and cable as it reduces in diameter during deployment.

BRIEF DESCRIPTION OF THE DRAWINGS

These and other features, aspects and advantages of the present invention will become better understood with reference to the following description and appended claims, and accompanying drawings wherein:

FIG. **1** is a perspective view of an embodiment of the cable reel;

FIG. **2** is a side view of an embodiment of the cable reel;

FIG. **3** is a side view taken through section **3-3** of FIG. **2**;

FIG. **4** is an enlargement of a section of FIG. **3**;

FIG. **5** is a perspective view of an embodiment of the bearing handle;

FIG. **6** is a perspective view of an embodiment of the bearing wheel;

FIG. **7** is a perspective view of an embodiment of the handle spacer;

FIG. **8** is a perspective view of an embodiment of the reel spacer;

FIG. **9**A is a perspective view of an embodiment of the hub ratchet adapter;

FIG. **9**B is a top view of an embodiment of the hub ratchet adapter; and,

FIG. **9**C is a cross-section taken through section **9**C-**9**C of FIG. **9**B;

FIG. **10** is a perspective view of an embodiment of the cable reel in a partially exploded format from a first side;

FIG. **11** is a perspective view of an embodiment of the cable reel in a partially exploded format from a second side;

FIG. **12** is a side view of an embodiment of the cable reel in a partially exploded format; and

FIG. **13** is a perspective view of an embodiment of the cable reel with an embodiment of a bearing assembly shown in an exploded format.

DETAILED DESCRIPTION

The preferred embodiments of the present invention are illustrated by way of example below and in the above referenced figures. As seen in FIGS. **1**, **2**, and **3**, the cable reel **10** includes a spool **100** and two discs **200**. The two discs **200** may be disposed on opposite sides of the spool **100**. The discs **200** are attached to the spool **100** such that the discs **200** are able to spin independently from the spool **100**. The two discs **200** and the spool **100** may be axially aligned.

In the discussion of the present invention, the invention will be discussed in a fiber optic cable environment; however, this invention can be utilized for any type of need that requires use of a reel.

In the preferred embodiment, the spool **100** is a spool weldment or a one piece welded assembly. As seen in FIG. **3**, the spool **100** includes a spool cylinder **101**. The spool cylinder **101** may be axially aligned with the two discs **200** and the spool **100**. The spool **100** also includes two spool discs **102** disposed at opposite axial ends of the spool cylinder **101**. In operation, the cable wraps around the spool cylinder **101**. Each spool disc **102** is juxtapositioned next to a corresponding disc **200** (or on opposite sides of the spool cylinder **101**); however, the spool discs **102** rotate independently from the discs **200**. The spool **100** and/or discs **200** may be manufactured from plastics, composites, aluminums, or any material deemed practicable.

In the preferred embodiment, the two discs **200** are manufactured from aluminum and include rubber edge trim **205** on the outer diameter of each of the discs **200**. The cable reel **10** may include bearings or a bearing system **500** that allows the discs **200** to be able to spin independently from the spool **100**. In the one of the embodiments of the invention, each disc **200** has a larger outer diameter than each spool disc **102** and each disc **200** extends past each spool disc **102**. In the preferred embodiment, both discs **200** are substantially similar, and both spool discs **102** are substantially similar.

The cable reel **10** may also include a base **300** and a handle **400**. The base **300** may be rotatably attached to the spool **100** and the two discs **200**. The spool **100** may include an axle hub **103** that is disposed within the spool cylinder **101**. The spool cylinder **101** and the axle hub **103** may be axially aligned.

The axle hub **103** may be a hollow tube with an inner diameter **103***a* and an outer diameter **103***b*. Each disc **200** and the spool **100** may include a center chamber passing through

each respective center axis (each center chamber may create an inner diameter for each disc **200** and the spool **100**). The axle hub **103** may be disposed within each of these center chambers. The axle hub **103** may hold the spool **100**, the two discs **200** and the base **300** together. A retaining ring **700** installed onto axle hub **103** prevents the discs **200** from slipping off the axle hub **103**.

The base **300** may include a plurality of legs **301** and an attachment portion **302**. In the preferred embodiment, there are two attachment portions **302** that are each rotatably attached, via the axle hub **103**, to the discs **200** and the spool **100**. Each attachment portion **302** may be partially circular. As seen in FIG. **2**, two legs **301** may extend from each attachment portion **302** to the ground in order to stabilize and hold the cable reel **10**. In the preferred embodiment, there may be two attachment portions **302** disposed on opposite sides of the spool **100** and on the outside of each of the two discs **200**. The base **300** may include four legs **301**, two on each side, two extending from each attachment portion **302** and extending past the outside diameter of each disc **200**. The two legs **301** disposed on the same side of the cable reel **10** (the two legs **301** juxtapositioned next to the same disc **200** and extending from the same attachment portion **302**) may be attached to each other via a beam **303**. At one of its ends, each beam **303** may also include a flange **307**. Each flange **307** may extend past the beam **303** (as well as the corresponding leg **301**) so that the flanges **307** may hook onto a platform, trailer or the like, and allow a user to flip the cable reel **10** onto the platform or trailer. The base **300** may also include a crossbar **304** that is attached to legs **301** disposed on opposite sides of the cable reel **10**. There also may be a trave **305** that is attached to both those same legs only above the crossbar **304**. In another embodiment of the invention, the crossbar **304** may be attached to each of the beams **303** at opposite ends of the crossbar **304**. The base **300** may be manufactured from plastics, composites, aluminums, metal, or any material deemed practicable.

The handle **400** may be a substantially u-shaped bar which includes two side portions **401** and a trave portion **402**. Each side portion **401** is attached to a leg **301** of the base **300** at a first end. The two side portions **401** are attached to the trave portion **402** at a second end. The trave portion **402** has two opposite ends at which it is attached to the two respective side portions **401**. As seen in FIG. **1**, each side portion **401** is disposed on opposite sides of the cable reel **10**.

The cable reel **10** may also include a ratchet **600** or hand crank. The ratchet **600** may be a standard hand crank ratchet. The ratchet **600** may include a ratchet adapter **601** that allows the ratchet **600** to be used to rotate the spool **100** via the axle hub **103**. The cable reel **10** may also include a ratchet storage system **605** for holding and securing the ratchet **600** to the cable reel **10**. The ratchet storage system **605** may be clips or the like. The ratchet storage system **605** may be disposed on the handle **400**, particularly on one of the side portions **401** of the handle **400**.

There may be two bearing systems **500** in the cable reel **10**. Each disc **200** and spool disc **102** may have a corresponding bearing system **500** located on opposite sides of the cable reel **10**. As shown in FIG. **4**, the bearing system **500** may include a handle bearing **501** and a wheel bearing **502**. The handle bearing **501**, shown in FIG. **5**, may be a donut shaped annulus that includes a handle bearing bore **511**, fastener apertures **512** for accepting fasteners and a handle bearing counter bore **513**. The handle bearing bore **511** and the handle bearing counter bore **513** may axially correspond. The handle bearing **501** may be manufactured from ultra thigh molecular weight polyethelene. The handle bearing **501** may be attached to the attachment portion **302** of the base **300**. The handle bearing **501** and the attachment portion **302** may be attached or fastened in any manner practicable. As seen in FIGS. **2** and **4**, the preferred fasteners are screws **510** screwed into the fastener apertures **512**. As seen in FIG. **6**, the wheel bearing **502** may be a donut shaped annulus with a fillet **503** at its inner diameter. As seen in FIG. **4**, the wheel bearing **502** and the handle bearing **501** may be axially aligned and in rotational communication with each other, with the wheel bearing **502** enveloping the handle bearing **501**. The wheel bearing **502** may also include wheel bearing fastener apertures **514**. Wheel bearing fastener **514** in wheel bearing **502** attaches to the disc **200**. As seen in FIG. **4**, the inner diameter of the disc **200** may be in communication with the fillet **503**, specifically fitting (and abutting) into the corner created by the fillet **503**. The wheel bearing **502** may be attached to the disc **200**. The preferred attachment or fastening method is screws via the wheel bearing fastener apertures **514**. The wheel bearing **502** may be manufactured from ultra thigh molecular weight polyethylene. The bearing system **500** may also include a handle spacer **504** and a handle spacer bushing **506** and a reel spacer **505**. The handle spacer **504**, shown in FIGS. **4** and **7**, may be ring like and may be disposed between the attachment portion **302** (specifically abutting against the fillet **503**), the disc **200** and the wheel bearing **502**. The handle spacer **504** and handle spacer bushing **506** may envelop the outer diameter of the handle bearing **501**. The handle spacer **504** may be manufactured from vinyl foam. The reel spacer **505**, shown in FIGS. **4** and **8**, may be ring like and may be disposed between the spool disc **102** and the disc **200**. As seen in FIG. **4**, the reel spacer **505** may overlap or envelop the outer diameter of the wheel bearing **502**. The reel spacer **505** may be manufactured from polytetrafluoroethylene or Teflon®.

The cable reel **10** may also include a hub ratchet adapter **550**. As seen in FIG. **4**, the hub ratchet adapter **550** may be axially disposed within the axle hub **103**, specifically within the inner diameter **103***a* of the axle hub **103**. As seen in FIGS. **9**A, **9**B, and **9**C, the hub ratchet adapter **550** may include a cylindrical portion **551** and a polygonal portion **552**. The cylindrical portion **551** has a substantially circular cross section, while the polygonal portion **552** has a substantially polygonal cross section. The preferred embodiment of the polygonal portion **552** has a hexagonal cross section. The cylindrical portion **551** and the polygonal portion **552** may be axially aligned. The hub ratchet adapter **550** may include a bore **553** and a tapered bore **554**. The bore **553** may extend through the polygonal portion **552** toward the cylindrical portion **551**. At or about the cylindrical portion **551**, or as shown in FIG. **9**C just into the cylindrical portion **551**, the bore **553** turns into the tapered bore **554** that tapers outward toward the outer diameter of the cylindrical portion **551**.

The hub ratchet adapter **550** may correspond to the ratchet **600** (specifically the ratchet adapter **601**) such that the ratchet **600** may to be used to rotate the spool **100** via the axle hub **103**, allowing the user to unwind or rewind the cable.

In operation, the cable reel **10** may be tipped such that the two discs **200** are in contact with the ground and the base **300** is not in contact with the ground. Once the cable reel **10** is tipped and the two discs **200** are in contact with the ground, the discs **200** may be rolled to another location without the cable being dispensed because the spool **100** spins independently from the discs **200**. To deploy the cable, the discs **200** may be rolled along the ground with the cable not secured. The axle hub **103** rotates on the inside diameter of the handle bearing **501**, while the wheel bearing **502** inside diameter rotates on the handle bearing **501** outside diameter.

Referring to FIG. **10**, a cable reel embodiment is shown with one of disc **200** and base **300** comprising a bearing assembly pulled away from the cable reel assembly. In particular, base **300** includes legs **301** and attachment portion **302**. Handle bearing **501** is coupled to attachment portion **302** with screws in this embodiment which pass through attachment portion **302**. Two handle spacer bushings **506**, one handle spacer **504**, and two additional handle spacer bushings **506** are positioned on handle bearing **501** and in proximity to the attachment portion **302**. The handle bearing **501** may be a donut shaped annulus that includes a handle bearing bore **511**. Wheel bearing **502** is inserted into an aperture in the center of disc **200** and coupled with disc **200**. Wheel bearing **502** has an inner circumference which permits insertion of the handle bearing **501** and relative rotation between the handle bearing **501** and wheel bearing **502**. Reel spacers **505** are thin, flat, and circular shaped spacers which have an inner aperture having a diameter and circumference which permits them to be placed around a reel side of wheel bearing **502**. FIG. **10** shows a center line showing the axis of rotation for the reel assembly which the bearings and discs rotate around when they are assembled together in proximity with spool disc **102**. FIG. **10** also shows spool **100** and adjustable plate **105** coupled to the spool cylinder **101** (coupling not shown). Hidden lines show another set of installed reel spacers **505** in a non-exploded view on the opposing side of the spool **100** from the reel spacers **505** which is shown in exploded format. Base **300** is shown including legs **301** and a beam **303** which form, along with other components, a supporting assembly for the spool assembly. Handle **400** and u-shaped side portions **401** are also shown.

FIG. **11** shows a perspective view from a reverse angle than shown in FIG. **10** where disc **200** and side assembly comprising a base **300** and attachment portion **302** are pulled away from the rest of the cable reel assembly along a line which runs through a rotational axis through the center of the cable reel. Handle bearing **501** is shown coupled to the attachment portion **302** of the side assembly using screws in this embodiment evenly spaced around the center of a hole which passes through the attachment portion **302**. Disc **200** is shown with wheel bearing **502** coupled to disc **200** where portions of wheel bearing **502** on an opposing side of disc **200** are shown using hidden lines. Wheel bearing **502** is shown coupled to disc **200** using screws (in this embodiment) where the screws are evenly spaced around a circular path which is between an inner and outer edge of wheel bearing **502**. A retaining ring **700** installed onto axle hub **103** prevents the discs **200** from slipping off the axle hub **103**. As shown in FIG. **11**, retaining ring **700** is actually installed onto the axle hub **103** even though disc **200** and attachment portion **302** are shown disassembled and in exploded format. The retaining ring is shown in the installed position to show where it would be located if the entire assembly was combined. Spool cylinder **101** is shown with a spool disc **102** installed on one end at an outer portion of the spool cylinder **101**. Adjustable plate **105** is shown between the two spool discs **102** with another disc **200** in position next to the farther spool disc **102**. Handle **400** and u-shaped side portions **401** are also shown attached to a side assembly (not shown) which is in turn coupled to a base assembly which includes legs **301**, a trave **305**, a beam **303**.

FIG. **12** shows a side view that is parallel to the discs **200** where a bearing assembly (e.g., **501**, **506**, **504**, **506**, **502**, **505**), a side assembly (e.g., **301**, **300**, **302**), disc **200** are shown pulled away from the rest of the cable reel **10** assembly. Side assembly including legs **301**, base **300**, and handle bearing **501** are shown coupled together with handle bearing attached to attachment portion **302**. Two handle spacer bushings **506**, one handle spacer **504**, and two additional handle spacer bushings **506** are positioned on handle bearing **501** and in proximity to the attachment portion **302**. Wheel bearing **502** is inserted into an aperture in the center of disc **200** and coupled with disc **200**. Wheel bearing **502** has an inner circumference which permits insertion of the handle bearing **501** and relative rotation between the handle bearing **501** and wheel bearing **502**. Reel spacers **505** are thin, flat, and circular shaped spacers which have an inner aperture having a diameter and circumference which permits them to be placed around a reel side of wheel bearing **502**. FIG. **12** shows a center line showing the axis of rotation for the reel assembly which the bearings and discs rotate around when they are assembled together in proximity with spool disc **102**. A retaining ring **700** installed onto axle hub **103** prevents the discs **200** from slipping off the axle hub **103**. As shown in FIG. **12**, retaining ring **700** is actually installed onto the axle hub **103** even though disc **200** and attachment portion **302** are shown disassembled and in exploded format. The retaining ring is shown in the installed position to show where it would be located if the entire assembly was combined. Handle bearing **501** is inserted onto axle hub **103** which may be a hollow tube with an inner diameter **103***a* and an outer diameter **103***b*. the spool **100** includes a spool cylinder **101**. The spool cylinder **101** may be axially aligned with the two discs **200** and the spool **100**. The spool **100** also includes two spool discs **102** disposed at opposite axial ends of the spool cylinder **101**. The cable reel **10** also includes a base **300** and a handle **400**. The base **300** is rotatably attached to the spool **100** and the two discs **200**. Mounting hardware **107** is used to couple the adjustable plate **105** to the spool cylinder **101**.

FIG. **13** shows an exploded perspective view of the cable reel **10** with a side assembly (**300**, **301**, **302**) and a portion of the bearing assembly (**501**, **506** (2 each), **504** and **506** (2 each) pulled away from the cable reel **10** assembly. Sections of the base assembly are also shown (**305**, **303**, **305**). FIG. **13** also shows disc **200** in an installed position with retaining ring **700** in an installed position on axle hub **103** where it would be if the entire assembly was coupled together.

When introducing elements of the present invention or the preferred embodiment(s) thereof, the articles "a," "an," "the," and "said" are intended to mean there are one or more of the elements. The terms "comprising," "including," and "having" are intended to be inclusive and mean that there may be additional elements other than the listed elements.

Although the present invention has been described in considerable detail with reference to certain preferred versions thereof, other versions are possible. Therefore, the spirit and scope of the appended claims should not be limited to the description of the preferred versions contained herein.

What is claimed is:

1. A cable reel, comprising:

a spool;

two discs disposed on opposite sides of the spool, each disc axially and rotatably attached to the spool such that the discs are able to spin independently from the spool, a frame structure having a first and second frame member each respectively and rotatably coupled to said two discs and opposite sides of said spool, said frame structure further comprising a base portion coupled to said first and second frame members, said base portion comprising one or a plurality of flanges adapted to leveraging engage one end of said frame structure with another structure having one or more receiving structures by positioning said frame such that said one or plurality of flanges leveragingly engaging said receiving structure and applying an upward and radial force on one end of

said frame such that said frame rotates around a rotation point defined by said one or plurality of flanges into a second position on said another structure.

2. The cable reel of claim **1**, wherein the spool further includes a handle, the handle attached to the frame.

3. The cable reel of claim **2**, wherein the handle is a substantially u-shaped bar surrounding the discs and spool, the handle includes two side portions and a trave portion, each side portion may include a first end and a second end, the first end of each side portion is attached to one of the legs, the second end of each of the side portion attached to the trave portion on opposite ends of the trave portion.

4. The cable reel of claim **3**, wherein the cable reel includes a ratchet, the ratchet adapted such that the ratchet is able to rotate the spool via an axle hub coupled to said spool.

5. The cable reel of claim **4**, wherein cable reel further includes a first and second bearing system, each of said first and second bearing system adapted to allow two discs to spin independently from the spool, said first and second bearing system each comprising a first, second and third bearing structures.

6. The cable reel of claim **4**, wherein the spool includes a spool cylinder and two spool discs, the two spool discs disposed on axial opposite ends of the spool cylinder, each disc juxtapositioned next to each of a corresponding one of said two discs.

7. The cable reel of claim **6**, wherein the cable reel further includes two bearing systems, each corresponding disc and spool disc having a corresponding bearing system.

8. The cable reel of claim **7**, wherein each bearing system includes a handle bearing and a wheel bearing, the wheel bearing attached to the corresponding attachment portion, the handle bearing attached to the corresponding disc, the wheel bearing and handle bearing in rotational communication with the wheel bearing enveloping handle bearing.

9. A reel comprising:

a spool;

a first and second disc disposed on opposite side areas of said spool;

a third and fourth disc positioned on opposite sides of said spool, said third disc is positioned on one side of said first disc and said fourth disc is positioned on one side of said second disc;

a longitudinal member disposed within said spool, one portion of said longitudinal member is coupled to a portion of either said spool or said first disc;

a first and second rotational structure, said first and second rotational structure disposed on opposite sides of said spool; and

a frame structure with a first and second member positioned on opposite sides of said spool;

wherein said first rotational structure comprises a first, second and third bearing structure adapted to rotate relative to each other;

wherein said first bearing structure is rotatably coupled to an end area of said longitudinal member and rotatably coupled to said second bearing structure;

wherein said second bearing structure is coupled to said first member and rotatably coupled to said third bearing structure;

wherein said third bearing structure is coupled to said third disc.

10. A reel as in claim **9**, wherein said second rotational structure comprises:

a fourth, fifth and sixth bearing structure adapted to rotate relative to each other;

wherein said fourth bearing structure is rotatably coupled to a different end area of said longitudinal member and rotatably coupled to said fifth bearing structure;

wherein said fifth bearing structure is coupled to said second member and rotatably coupled to said sixth bearing structure;

wherein said sixth bearing structure is coupled to said fourth disc.

11. A reel as in claim **10**, further comprising a seventh bearing structure disposed between said first member and said third disc and is adapted to reduce friction between said first member and said third disc.

12. A reel as in claim **11**, further comprising an eighth bearing structure disposed between said second member and said fourth disc and is adapted to reduce friction between said second member and said fourth disc.

13. A reel as in claim **12**, further comprising a ninth bearing structure disposed between the first disc and the third disc adapted to reduce friction between said first disc and said third disc.

14. A reel as in claim **13**, further comprising a tenth bearing structure disposed between the second disc and the fourth disc adapted to reduce friction between said second disc and said fourth disc.

15. A reel as in claim **14**, further comprising a retaining member adapted to hold the said second rotational structure with relation to said longitudinal member.

16. A reel as in claim **9**, further comprising a fifth disc coupled to said spool between said first and second discs.

17. A reel as in claim **9**, further comprising a flexible material removably coupled to an outer area of said third and fourth discs that is adapted to increase friction between an outer circumferal edge of said third and fourth discs and a surface that said third and fourth discs are placed in rolling contact with.

18. A reel as in claim **9**, further comprising one or more protrusions coupled to one end portion of said frame adapted for removably coupling with another structure by inserting said one or more protrusions into said another structure and applying an upward and radial force to said frame.

19. A reel as in claim **9**, further comprising a handle coupled to said frame adapted to permit manual handling and movement of said reel.

20. A reel as in claim **9**, further comprising a crank receiver structure coupled to said longitudinal member that is adapted to receive a handle crank or another structure for applying rotational force to said longitudinal member and thereby rotate said spool.

21. A reel as in claim **9**, further comprising a retaining member adapted to hold the said first rotational structure with relation to said longitudinal member.

22. A reel comprising:

a spool;

a first and second disc disposed in proximity to opposing side areas of said spool;

a third and fourth disc positioned in proximity to said opposing sides of said spool, said third disc is positioned on one side of said first disc and said fourth disc is positioned on one side of said second disc wherein said first and second discs have a smaller diameter than said third and fourth discs, said third and fourth discs are in closer proximity to an edge area of said opposing sides of said spool than said first and second discs;

a first and second edging structure respectively formed around an outer diameter edge of said third and fourth disc, wherein said first and second discs are each posi-

tioned to respectively rotate underneath a section of said first and second edging structure;

a longitudinal member disposed within and coupled to said spool at a center axis of rotation of said spool;

a first and second rotational structure assembly, said first and second rotational structure disposed and coupled to opposite sides of said spool; and

a frame structure with a first and second member positioned on opposite sides of said spool;

wherein said first rotational structure assembly comprises a first and second bearing structure adapted to rotate relative to each other, wherein said first bearing structure has an outer section that couples with said first member and an inner section that rotatably couples to an end area of said longitudinal member which passes through an opening in said first bearing structure, said first bearing rotatably couples within said second bearing structure;

wherein said second bearing structure is coupled to said first member and rotatably coupled to said third bearing structure;

wherein said second bearing structure is coupled to said third disc.

23. A reel as in claim **22**, further comprising a plurality of thrust bearing/spacers adapted to reduce friction, wherein at least one of said thrust bearing/spacers are positioned between said first member, third disc, first disc as well as between said second member, fourth disc, and second disc.

24. A reel as in claim **23**, further comprising a flexible and compressible spacer positioned between two of said thrust bearings and positioned and rotates on said first bearing, wherein said flexible and compressible spacer is operable to reduce gaps between said bearings and discs.

25. A reel as in claim **22**, further comprising a handle coupled to said frame adapted to permit manual handling and movement of said reel.

26. A reel as in claim **22**, further comprising a crank receiver structure coupled to said longitudinal member that is adapted to receive a handle crank or another structure for applying rotational force to said longitudinal member and thereby rotate said spool.

27. A reel as in claim **22**, further comprising one or more protrusions coupled to one end portion of said frame adapted for removably coupling with another structure by leveraging said one or more protrusions with a section of said another structure and applying an upward and radial force to said frame.

* * * * *