US007813223B1

(12) **United States Patent**
Snow et al.

(10) **Patent No.: US 7,813,223 B1**
(45) **Date of Patent: Oct. 12, 2010**

(54) **SYSTEM AND METHOD FOR FOCUSING A KINETIC PULSE ARRAY**

(75) Inventors: **Trevor Snow**, Bloomington, IN (US); **Jeffrey M. Snow**, Bloomington, IN (US)

(73) Assignee: **The United States of America as represented by the Secretary of the Navy**, Washington, DC (US)

(*) Notice: Subject to any disclaimer, the term of this patent is extended or adjusted under 35 U.S.C. 154(b) by 0 days.

(21) Appl. No.: **12/568,452**

(22) Filed: **Sep. 28, 2009**

(51) **Int. Cl.**
G01S 3/808 (2006.01)

(52) **U.S. Cl.** **367/127**; 367/138; 367/145

(58) **Field of Classification Search** 367/145; 102/310

See application file for complete search history.

(56) **References Cited**

U.S. PATENT DOCUMENTS

2,706,011	A		4/1955	Bayhi
4,699,241	A		10/1987	Kerekes
4,976,199	A	*	12/1990	Beukes et al. 102/310
5,180,882	A		1/1993	Bansard
5,539,636	A		7/1996	Marsh et al.
5,808,969	A		9/1998	Arnaud et al.
6,941,870	B2		9/2005	McClure et al.
7,051,636	B1		5/2006	Snow et al.
7,406,918	B2		8/2008	Brent et al.
7,453,392	B2		11/2008	Thomas et al.
2007/0084376	A1		4/2007	Lloyd
2008/0282925	A1		11/2008	Lownds et al.

OTHER PUBLICATIONS

Leslie Gertsch and Jason Baird, A Phased Array Approach to Rock Blasting, final technical report, Aug. 7, 2006, University of Missouri-Rolla.

* cited by examiner

Primary Examiner—Dan Pihulic
(74) *Attorney, Agent, or Firm*—Christopher A. Monsey

(57) **ABSTRACT**

The present disclosure relates to a method and system for finding and physically altering underground targets. Multiple nodes are dispersed into the ground and determine their spatial orientation using seismic waves, and then operate as an array to locate and properly time kinetic pulses to focus seismic waves on the target.

28 Claims, 12 Drawing Sheets

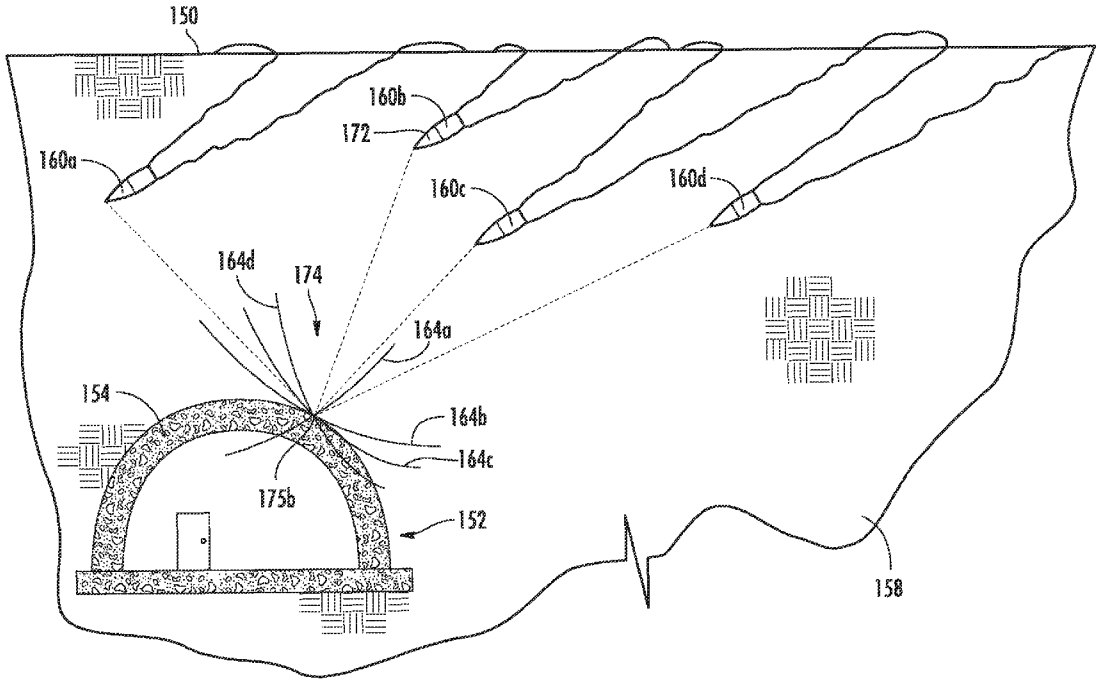

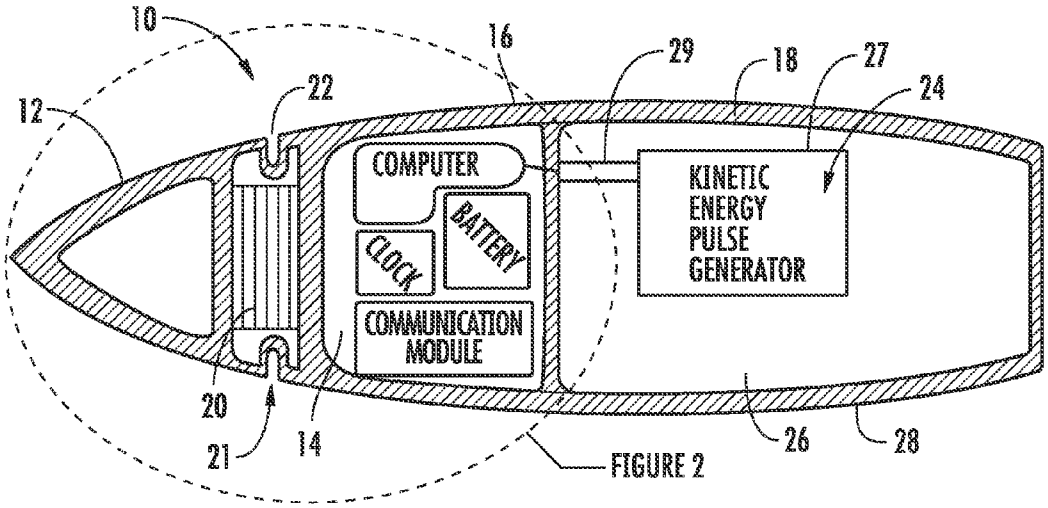
10
16
29
18
27
24
12
22
COMPUTER
BATTERY
CLOCK
COMMUNICATION MODULE
KINETIC ENERGY PULSE GENERATOR
20
21
14
26
28
FIGURE 2

FIG. 1

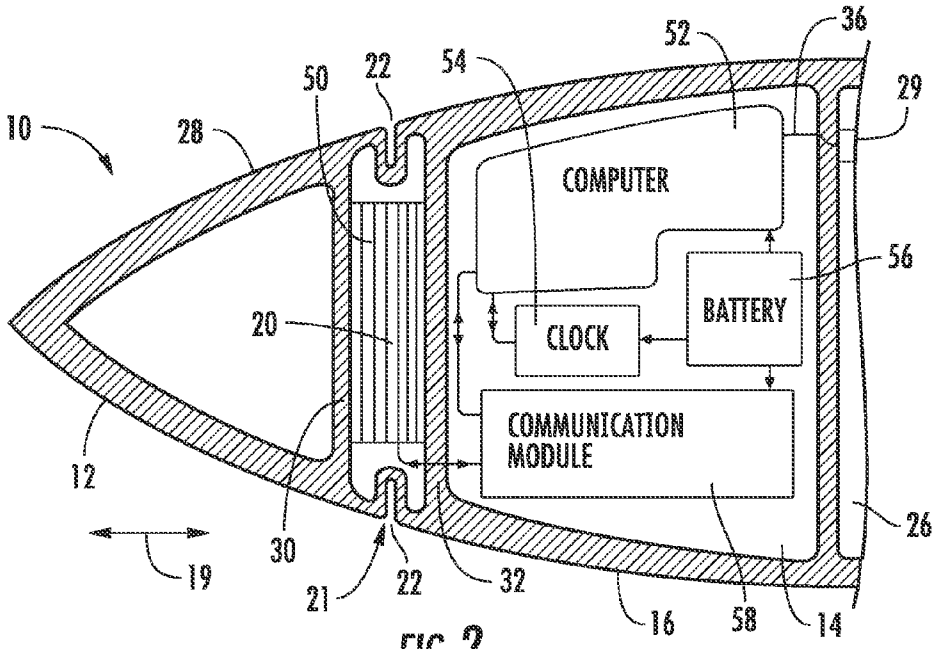
52
36
50
22
54
29
10
28
COMPUTER
56
BATTERY
20
CLOCK
COMMUNICATION MODULE
12
26
19
30
21
22
32
16
58
14

FIG. 2

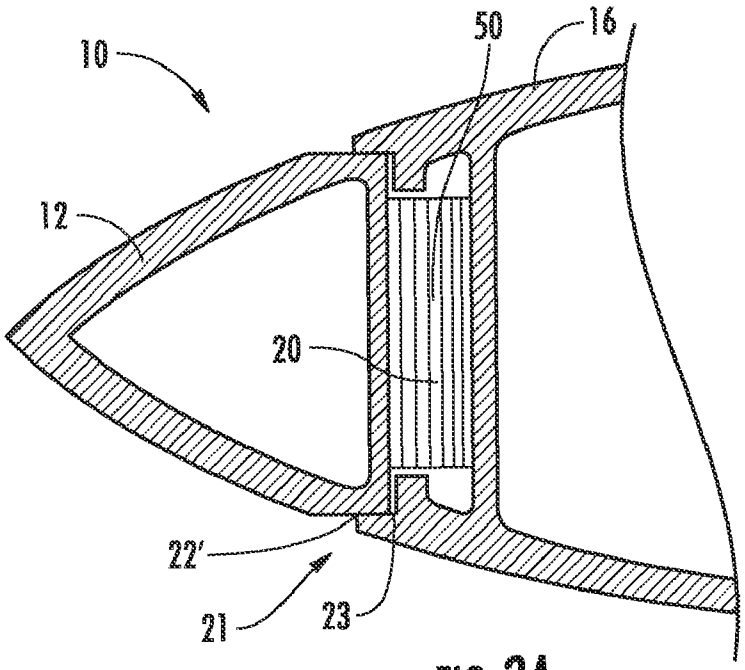

FIG. 3A

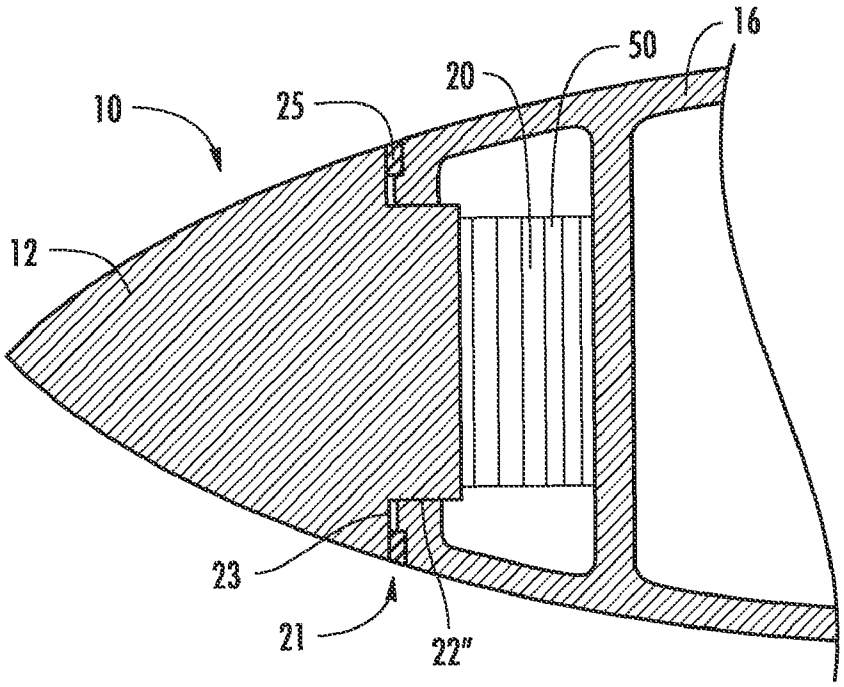

FIG. 3B

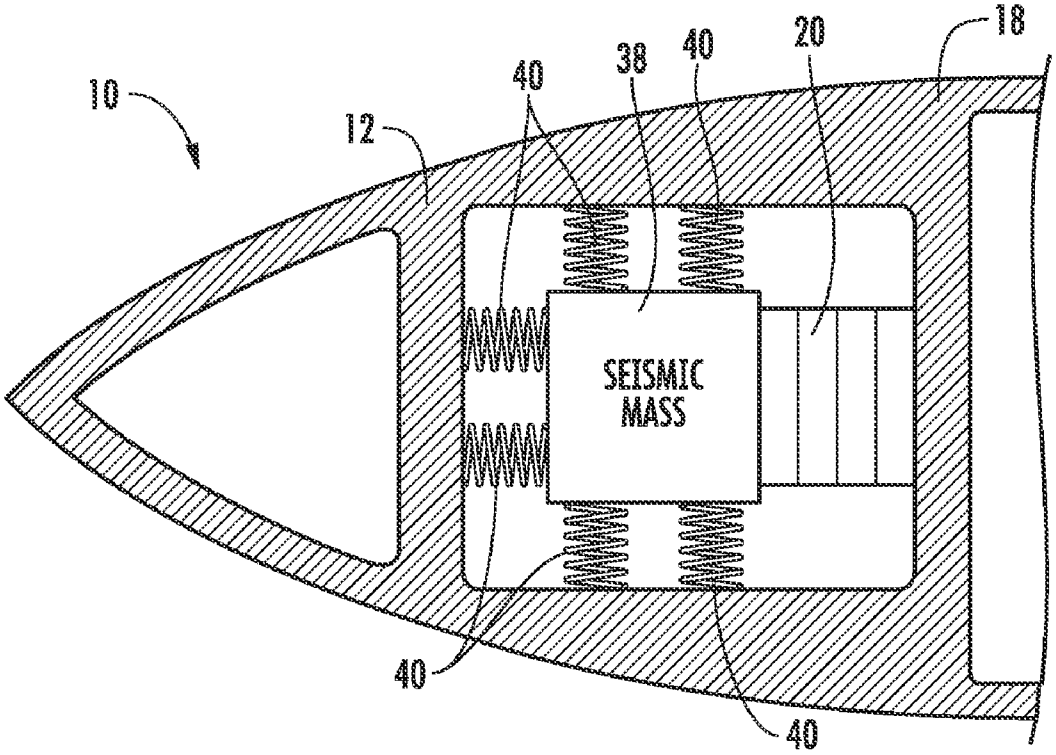

FIG. 4

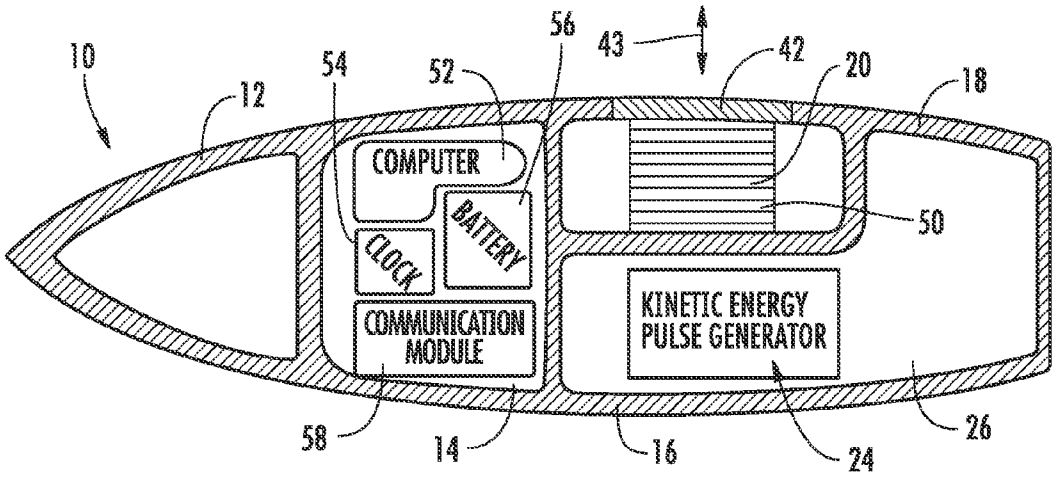
10
12
54
52
56
43
42
20
18
COMPUTER
BATTERY
CLOCK
COMMUNICATION MODULE
KINETIC ENERGY PULSE GENERATOR
50
58
14
16
24
26

FIG. 5

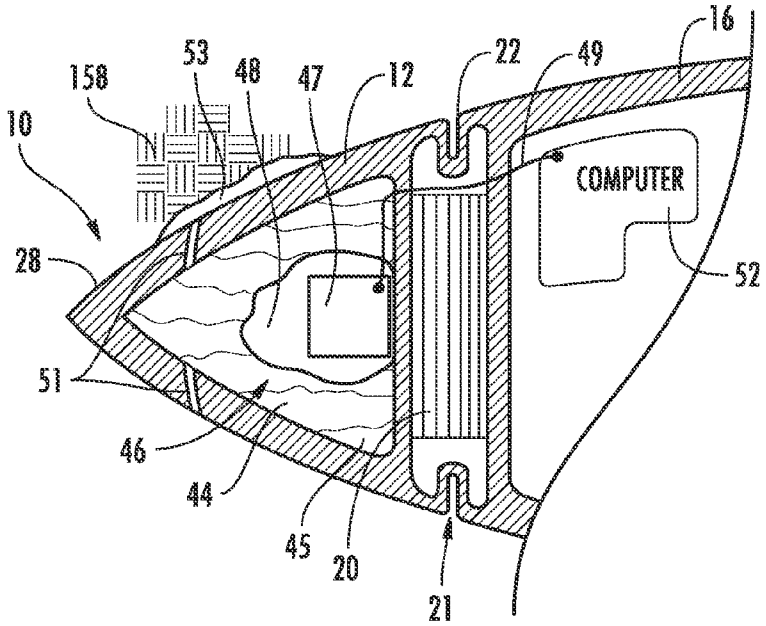
16
158
53
48
47
12
22
49
10
COMPUTER
28
52
51
46
44
45
20
21

FIG. 6

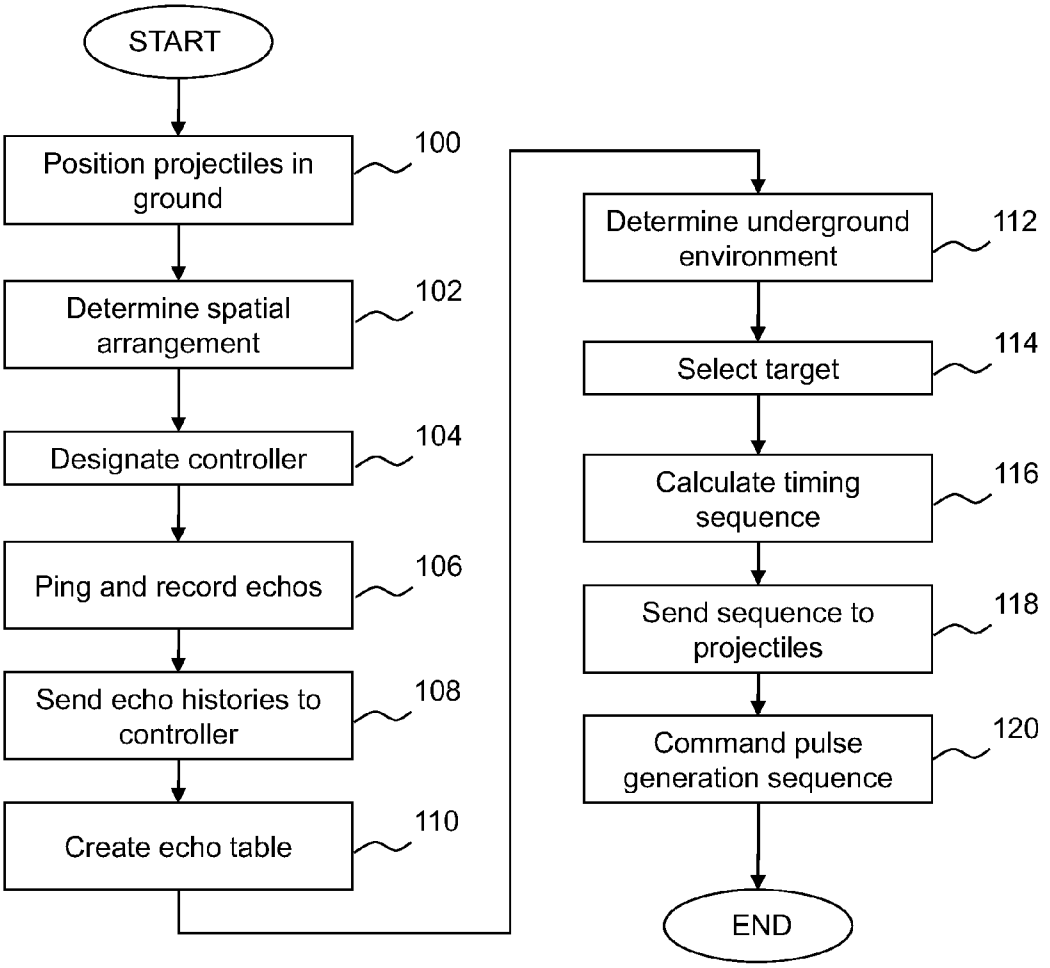
START
Position projectiles in ground
100
Determine spatial arrangement
102
Designate controller
104
Ping and record echos
106
Send echo histories to controller
108
Create echo table
110
Determine underground environment
112
Select target
114
Calculate timing sequence
116
Send sequence to projectiles
118
Command pulse generation sequence
120
END

FIG. 7

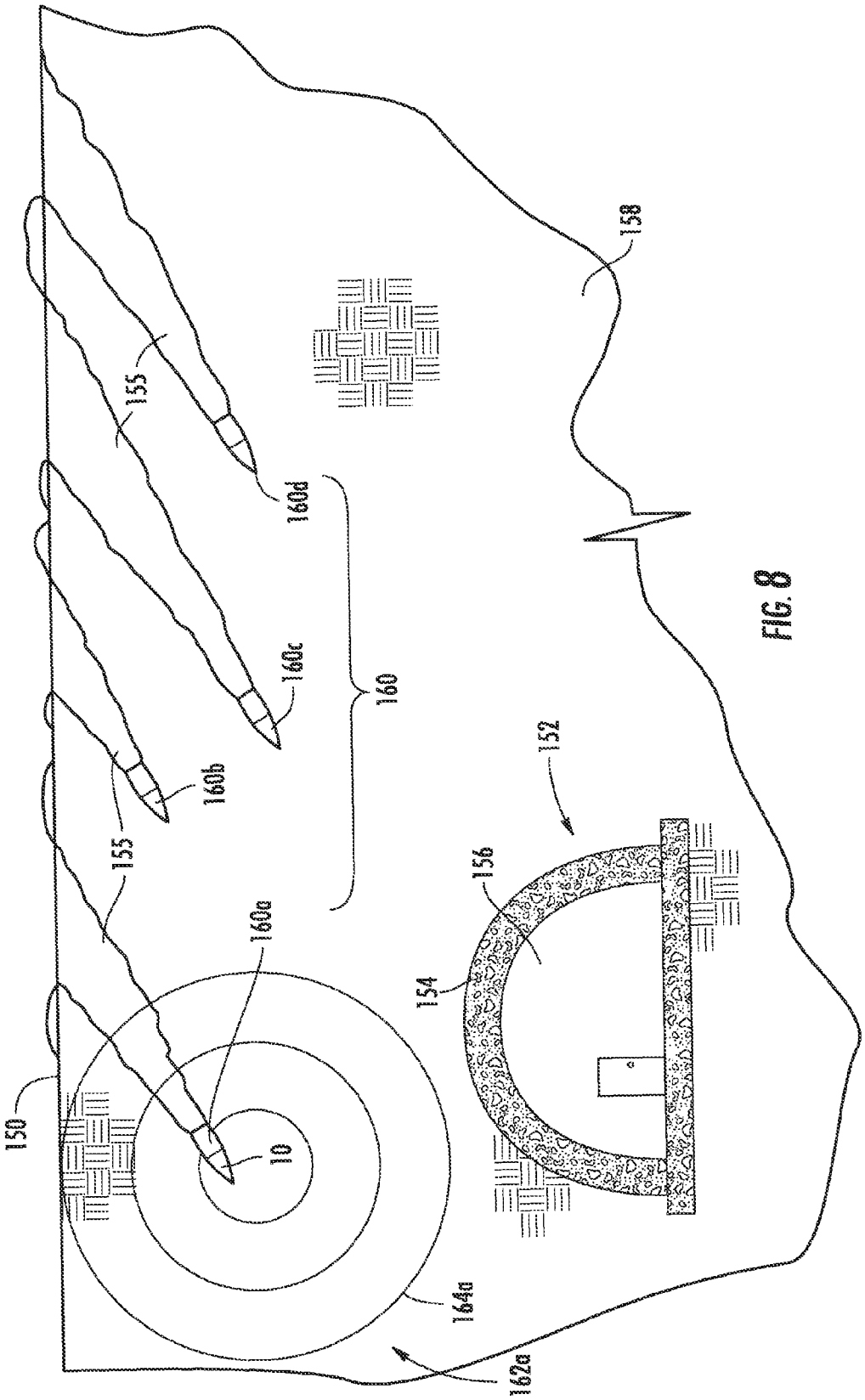
150
155
155
160a
160b
160c
160d
160
10
164a
162a
154
156
152
158

FIG. 8

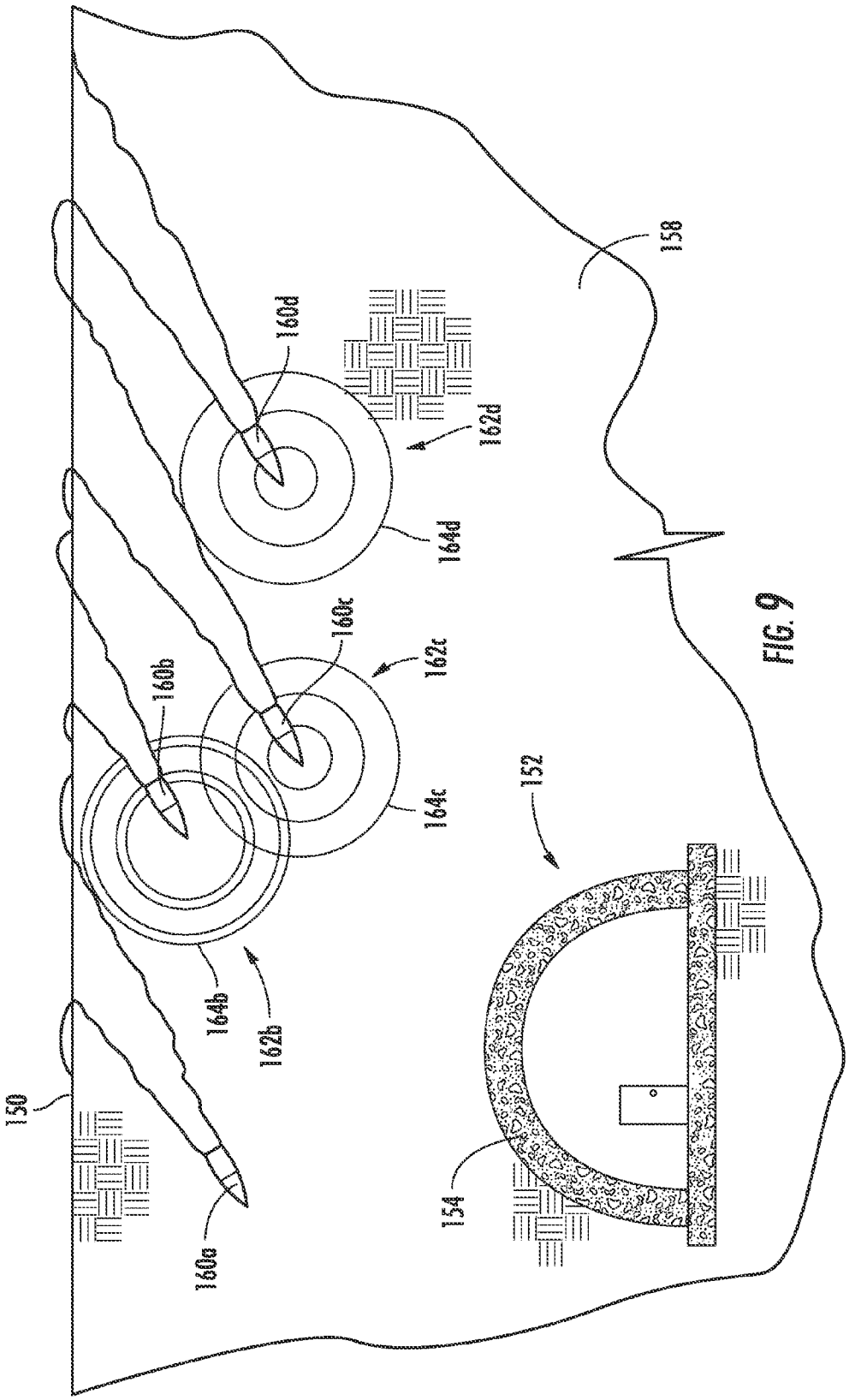
150
160a
160b
160c
160d
162b
162c
162d
164b
164c
164d
152
154
158

FIG. 9

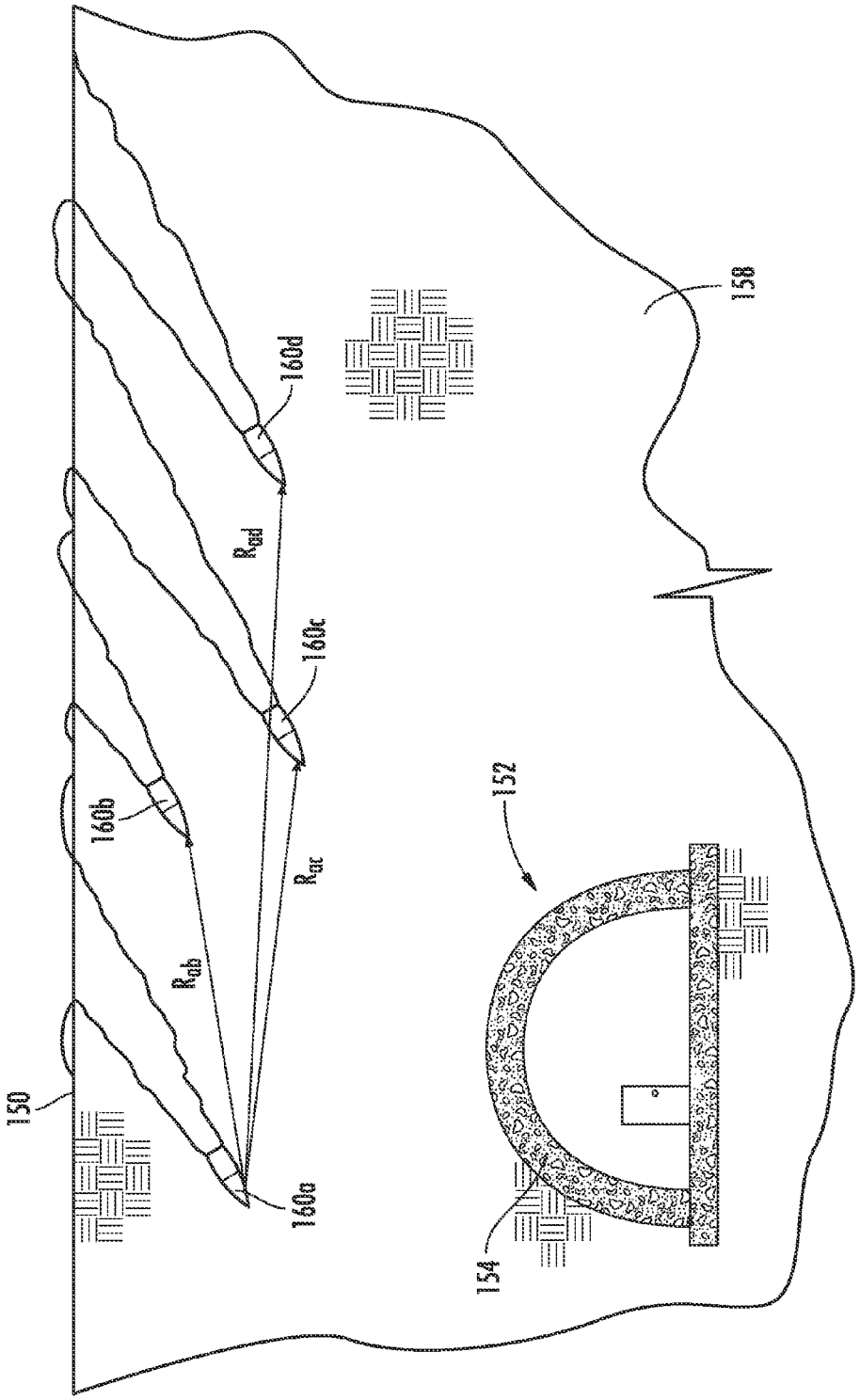

FIG. 10

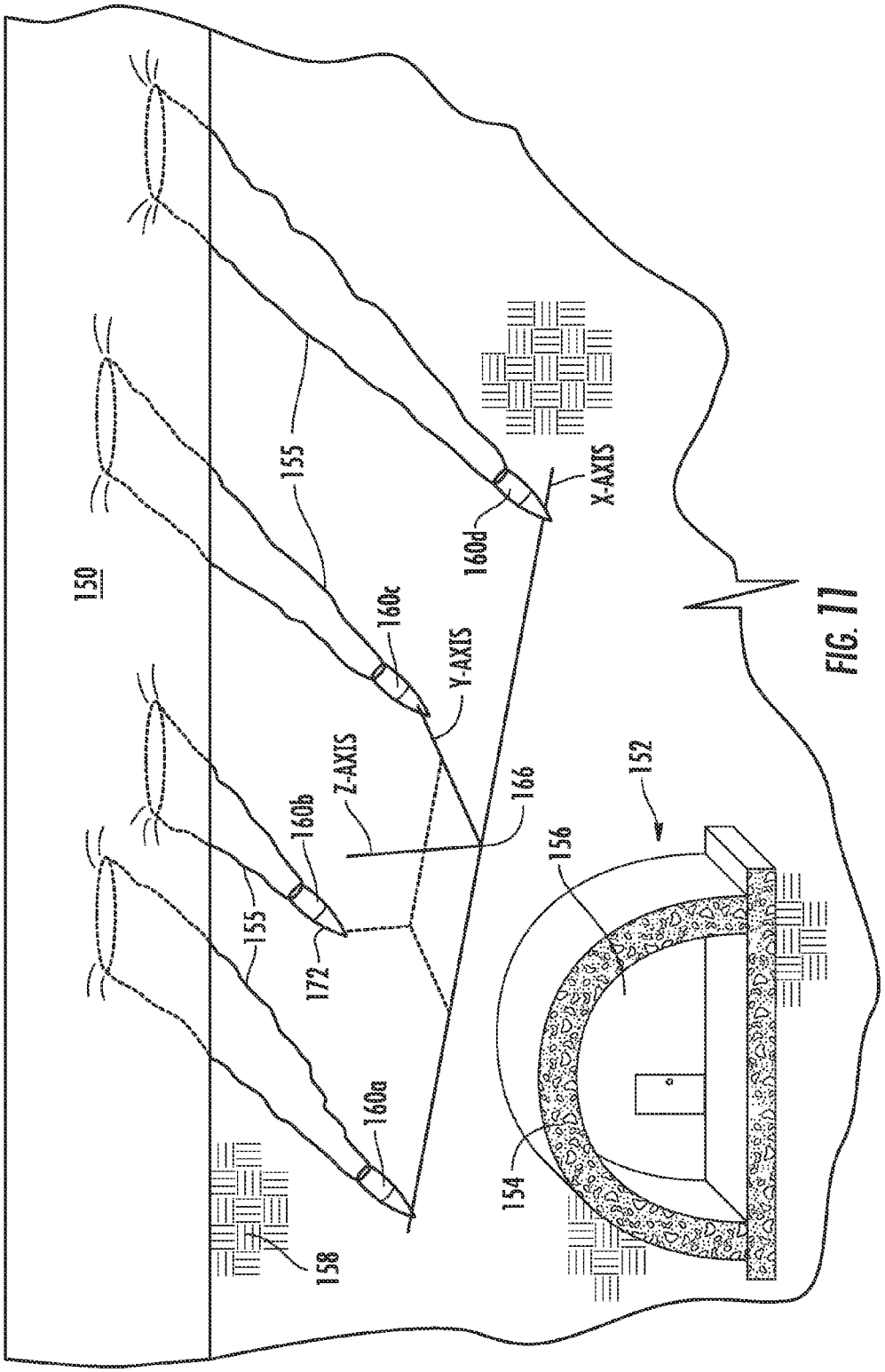
150
155
160d
X-AXIS
160c
Y-AXIS
Z-AXIS
166
152
156
160b
155
172
160a
154
158

FIG. 7I

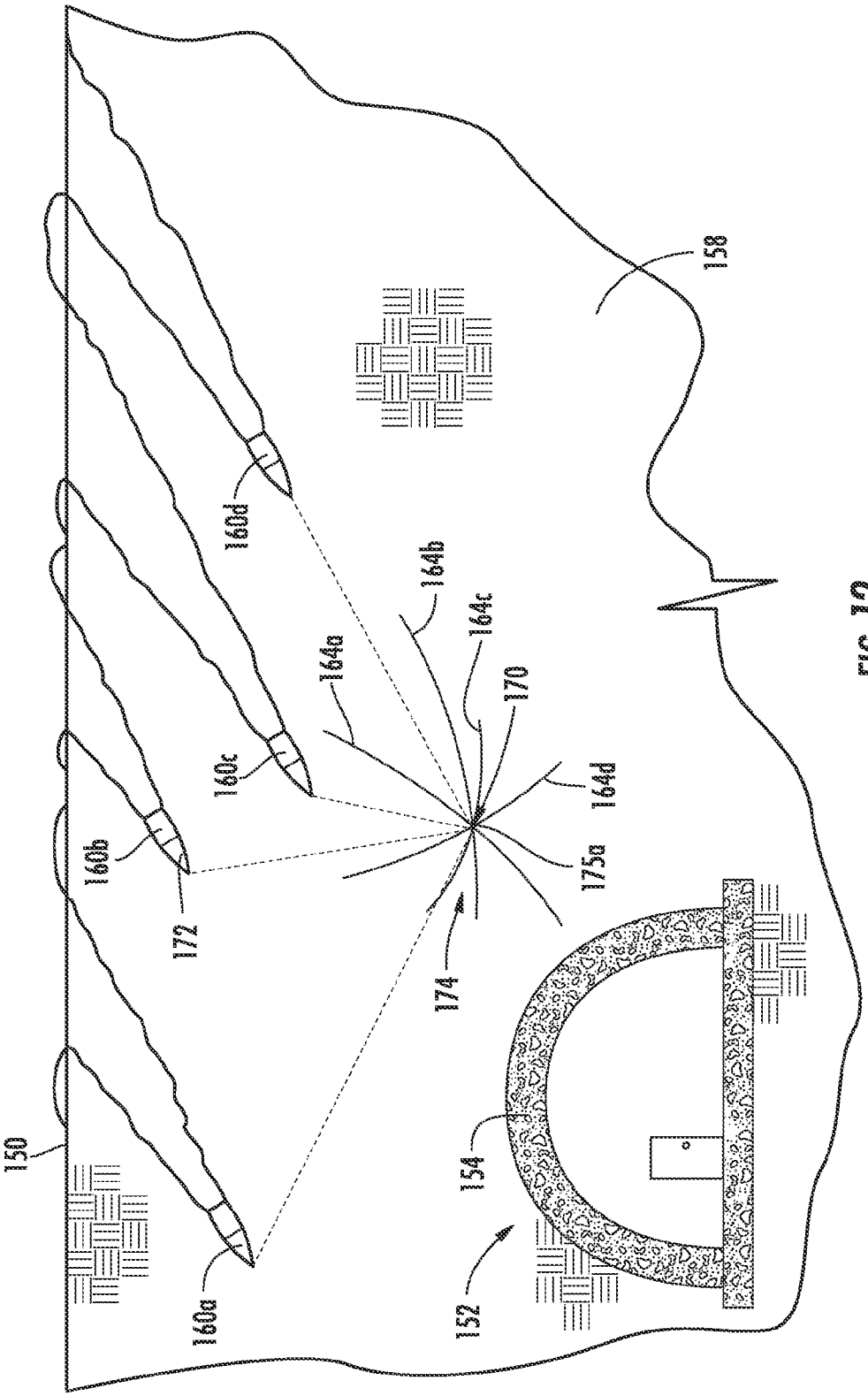
150
160a
160b
160c
160d
172
164a
164b
164c
164d
170
174
175a
152
154
158

FIG. 12

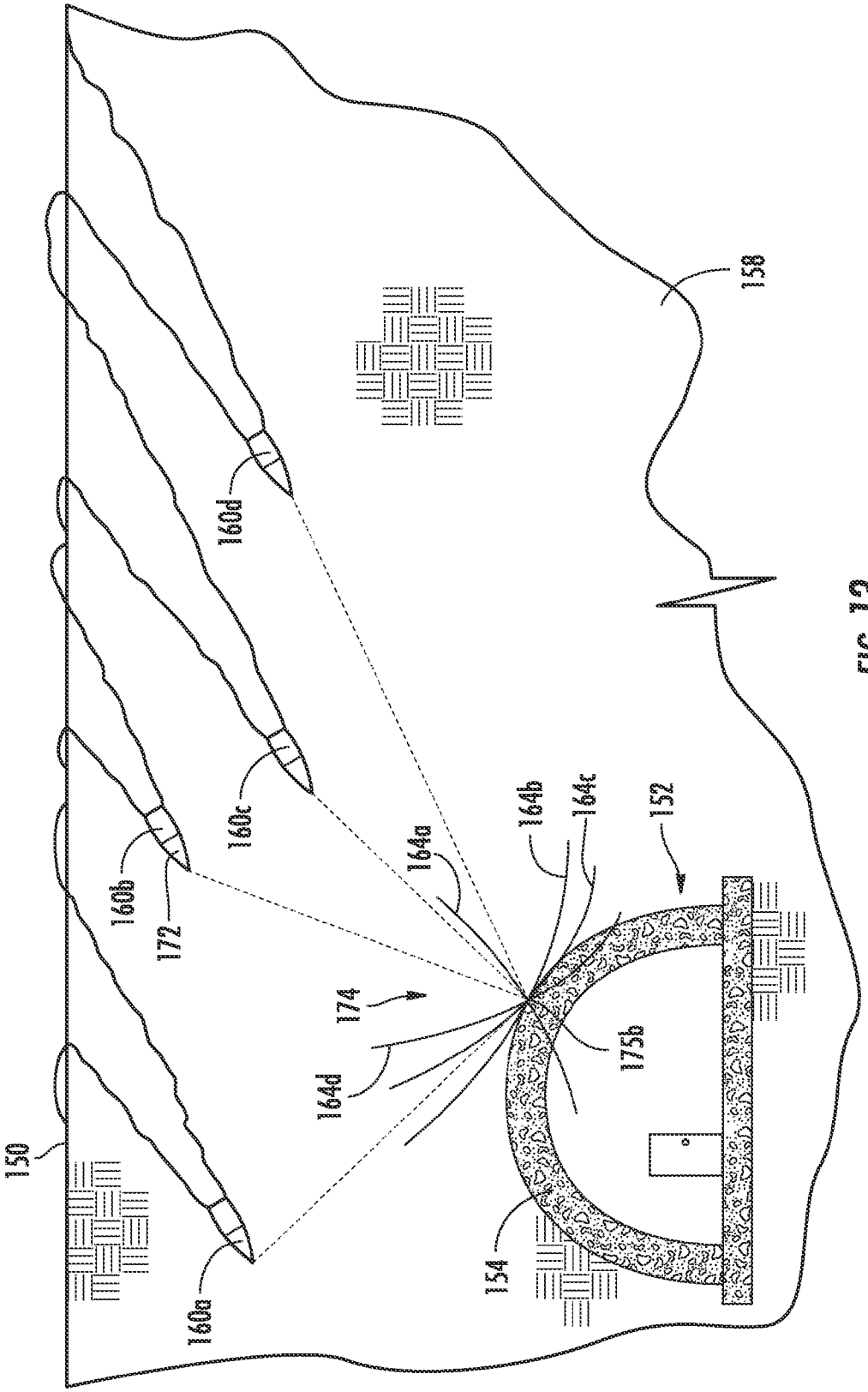
150
160a
160b
172
160c
160d
158
174
164d
164a
164b
164c
152
175b
154

FIG. 13

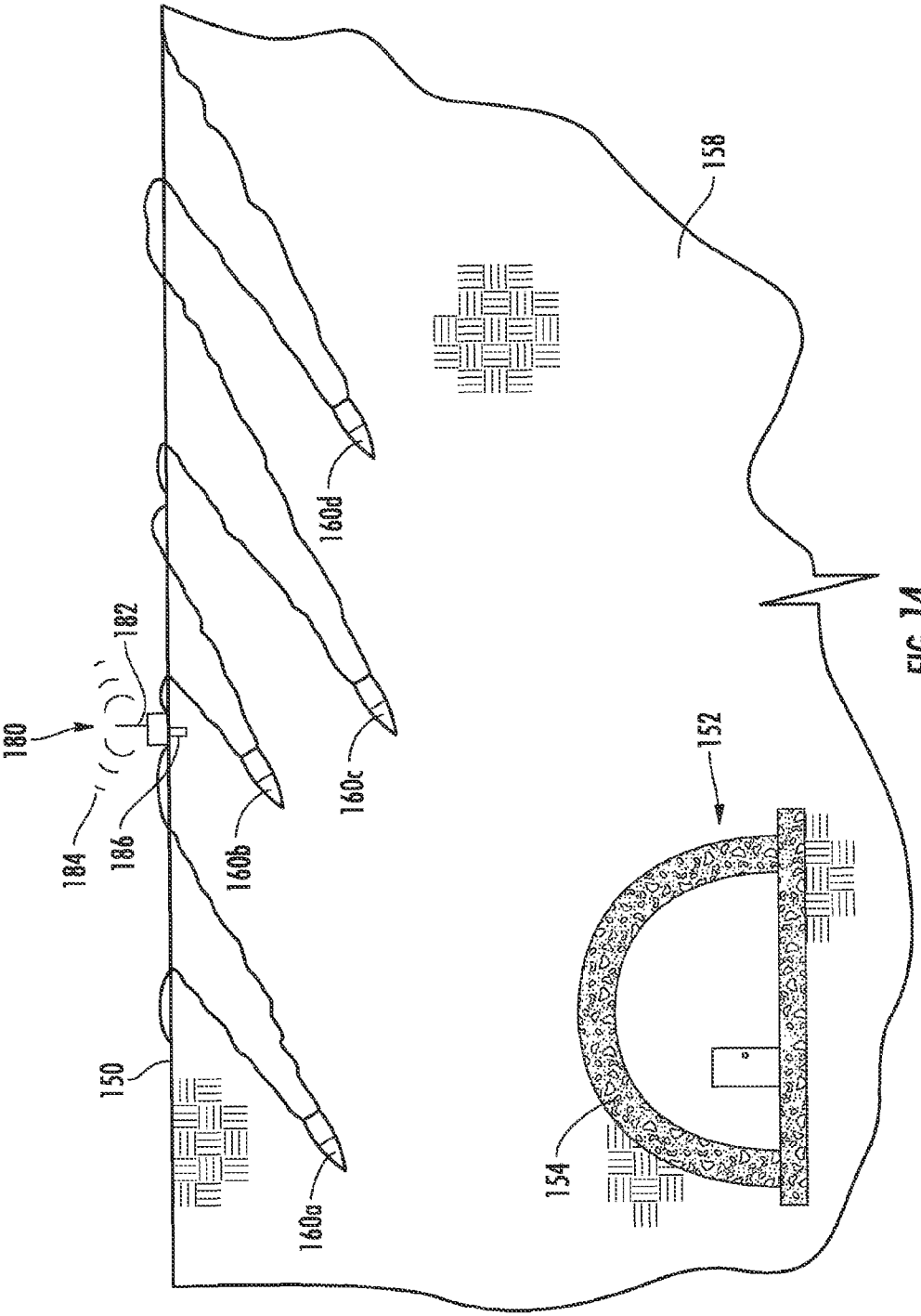

FIG. 14

SYSTEM AND METHOD FOR FOCUSING A KINETIC PULSE ARRAY

STATEMENT REGARDING FEDERALLY SPONSORED RESEARCH OR DEVELOPMENT

The invention described herein was made in the performance of official duties by employees of the Department of the Navy and may be manufactured, used, licensed by or for the United States Government for any governmental purpose without payment of any royalties thereon.

BACKGROUND AND SUMMARY

The present disclosure relates generally to transmitting synchronized kinetic pulses to a target. More particularly, the disclosure relates to a system and method for physically altering an underground target using synchronized timing of kinetic pulses to focus seismic waves on the target.

Deeply buried objects, such as underground structures and mineral and gas deposits, are often difficult to locate. Many technologies exist for identifying, physically altering, and/or creating imaging of underground objects or voids. For example, nodes equipped with transducers may be placed above or below the ground surface to generate seismic waves and measure reflections from density and/or stiffness changes. Explosive nodes may also be positioned in the ground to physically alter an underground target. However, the accuracy and effectiveness of such technologies is often limited by the penetration depth of the nodes or by errors in positioning the nodes near the underground target.

According to an illustrative embodiment of the present disclosure, a locator system is configured to locate an underground target and includes a plurality of nodes positioned within the ground proximate the underground target. Each node includes a transducer configured to transmit signals to at least one other node. A controller is in communication with the transducer of each node and is configured to determine the spatial arrangement of the plurality of nodes based on the signals communicated between the plurality of nodes. The transducer of each node is further configured to sequentially transmit a signal pulse to the underground target. The controller determines the location of the underground target based on the determined spatial arrangement of the plurality of nodes and the reflection received by each node of the transmitted signal pulse. In one illustrative embodiment, the transmitted signal pulses from the nodes may be coordinated and timed to combine in a desired direction thereby increasing the reflection strength from mass or stiffness changes in the desired direction. The controller may also control the generation of a kinetic pulse from each node based on the spatial arrangement of the plurality of nodes and the calculated location of the target to create a kinetic pulse array focused on the target.

According to another illustrative embodiment of the present disclosure, a method of locating an underground target includes the steps of providing a plurality of nodes, each node including a transducer configured to communicate a signal with at least one other node. The transducer is configured to transmit a pulse and receive a reflection of the pulse. The method further includes the steps of positioning the plurality of nodes within the ground proximate the underground target, communicating signals between the plurality of nodes, and determining a relative position of each node based on the communicated signals. The method also includes the steps of transmitting a pulse from each node in a plurality of directions, receiving a reflection of the transmitted pulse at each node, and calculating a location of the underground target relative to the plurality of nodes based on the determined relative position of each node and the reflections received by each node. The method may also include the step of generating a kinetic pulse from each node based on the spatial arrangement of the plurality of nodes and the calculated location of the target to create a kinetic pulse array focused on the target.

Additional features and advantages of the present invention will become apparent to those skilled in the art upon consideration of the following detailed description of the illustrative embodiment exemplifying the best mode of carrying out the invention as presently perceived.

BRIEF DESCRIPTION OF THE DRAWINGS

The foregoing aspects and many of the attendant advantages of this invention will become more readily appreciated as the same become better understood by reference to the following detailed description when taken in conjunction with the accompanying drawings.

FIG. **1** is a cross-sectional view of an illustrative projectile of the present disclosure;

FIG. **2** is a detailed cross-sectional view of the projectile of FIG. **1**;

FIG. **3**A is a detailed cross-sectional view of an illustrative transmission member between the nose portion and the body portion of the projectile;

FIG. **3**B is a detailed cross-sectional view similar to FIG. **3**A of another illustrative transmission member;

FIG. **4** is a detailed cross-sectional view of an illustrative transducer coupled to a seismic mass within the projectile;

FIG. **5** is a detailed cross-sectional view similar to FIG. **1**, showing an illustrative coupling arrangement of the transducer;

FIG. **6** is a detailed cross-sectional view of an illustrative coupling fluid received within the nose portion of the projectile;

FIG. **7** is a flow chart showing an illustrative method of operation of a system of the present disclosure;

FIG. **8** is a schematic view of an illustrative system of the present disclosure, showing multiple projectiles positioned within an underground environment and with a first projectile transmitting an interrogation signal;

FIG. **9** is a schematic view similar to FIG. **8**, showing response signals from multiple projectiles in response to the interrogation signal;

FIG. **10** is a schematic view similar to FIG. **8**, showing distances from the first projectile to the other projectiles as calculated by a controller;

FIG. **11** is a perspective view in partial schematic similar to FIG. **8**, showing the arrangement of the orthogonal reference coordinate system;

FIG. **12** is a schematic view similar to FIG. **8**, showing a focal point of kinetic pulse wave fronts generated by the projectiles;

FIG. **13** is a schematic view similar to FIG. **8**, showing the focal point of the kinetic pulse wave fronts sent by the controller at a calculated position of a target; and

FIG. **14** is a schematic view of an illustrative system similar to FIGS. **8-13**, showing a controller positioned at the ground surface.

Corresponding reference characters indicate corresponding parts throughout the several views. Although the drawings represent embodiments of various features and components according to the present invention, the drawings are not necessarily to scale and certain features may be exaggerated in

order to better illustrate and explain the present invention. The exemplification set out herein illustrates embodiments of the invention, and such exemplifications are not to be construed as limiting the scope of the invention in any manner.

DETAILED DESCRIPTION OF THE DRAWINGS

For the purposes of promoting an understanding of the principles of the invention, reference will now be made to the embodiments illustrated in the drawings, which are described below. The embodiments disclosed below are not intended to be exhaustive or limit the invention to the precise form disclosed in the following detailed description. Rather, the embodiments are chosen and described so that others skilled in the art may utilize their teachings. It will be understood that no limitation of the scope of the invention is thereby intended. The invention includes any alterations and further modifications in the illustrated devices and described methods and further applications of the principles of the invention which would normally occur to one skilled in the art to which the invention relates.

Referring initially to FIGS. **1** and **2**, an illustrative projectile **10** is shown for use as a node **160** (FIG. **8**) with a system of the present disclosure. In the illustrated embodiment, projectile **10** includes a housing or shell **18** having a nose portion **12**, a body portion **16**, and an outer surface **28**. The shell **18** is illustratively formed of a rugged, durable material, such as steel, and is configured for air borne delivery. For example, the projectile **10** may be launched in the air by artillery, mortar, or grenade launcher. The projectile **10** may also be part of a missile or a bomb dropped from an aircraft. Nose portion **12** illustratively tapers to a point to facilitate ground penetration, although nose portion **12** may be any suitable shape.

As further shown in FIGS. **1** and **2**, body portion **16** of shell **18** illustratively defines a first cavity **14** and a second cavity **26** for housing and protecting various components. In the illustrated embodiment, a processor or computer **52**, a clock **54**, a battery **56**, and a communication module **58** are positioned within first cavity **14**, and a kinetic energy pulse generator **24** is positioned within second cavity **26**. Suitable cushioning, such as foam or air bags, may be provided within the cavities **14** and **26** to protect the components received therein from shock due to launch setback or ground impact. Kinetic energy pulse generator **24** may be any device which generates a pulse of kinetic energy, such as a loudspeaker, an explosive, a sonar projector, etc. In one illustrative embodiment, the pulse generator **24** comprises an explosive **27** operably coupled to a detonator **29** which, in turn, is operably coupled to computer **52**. Shell **18** may alternatively define any number of cavities and house additional components and/or pulse generators. In certain illustrative embodiments, the projectile **10** may include multiple sets of cavities **14** and **26** separated by frangible portions of shell **18** that are configured to breakaway during impact, thereby defining multiple nodes **160** per single projectile **10** for additional directional sensing capability.

A transducer **20** housed in shell **18** is illustratively positioned between nose portion **12** and body portion **16** and near a transmission coupling **21** of projectile **10**. As shown in FIG. **2**, transducer **20** is mounted between a first wall **30** of nose portion **12** and a second wall **32** of body portion **16** of shell **18**. Transducer **20** is illustratively rugged to withstand forces or impact absorbed by projectile **10**. Transducer **20** may be any type of electronic, electromagnetic, electromechanical, or electroacoustic transducer. In the illustrated embodiment, transducer **20** is a sonic or acoustic transducer, or hydrophone, configured to transmit and receive acoustic signals or pulses. Transducer **20** is illustratively capable of substantially omni-directional broadcasting (in azimuth and in elevation), but the directionality of transducer **20** may also be unidirectional or bi-directional. In the shown embodiment, transducer **20** includes an active element **50** for transmitting and receiving acoustic signals (e.g., mechanical vibration through the nose portion **12**).

The transmission coupling **21** may comprise a bellows **22** positioned between nose portion **12** and body portion **16** (FIG. **2**). As further detailed herein, bellows **22** is substantially flexible and is configured to allow the transducer **20** to move the nose portion **12** relative to the body portion **16** (axial direction as shown by arrow **19** in FIG. **2**). The bellows **22** is configured to compress during impact and thereby transmit impact force to the body portion **16** of the projectile **10** and reduce the load the transducer **20** must endure.

FIGS. **3**A and **3**B show further illustrative transmission couplings **21** in the form of sliding joints. As shown in FIG. **3**A, the sliding joint **22'** defines a gap **23** configured to close during impact or launch to transfer load between the nose portion **12** and the body portion **16**, and configured to open during operation of the transducer **20**. As shown in FIG. **3**B, an elastomeric filler **25** may be positioned within an outer portion of the sliding joint **22"** and is configured to close gap **23** and exclude soil from penetrating the shell **18** during impact with the ground.

In a further illustrative embodiment, a shock absorber (not shown) separate from the transmission coupling **21** may be used to absorb impact from a collision between projectile **10** and another object or medium, such as the ground. In other words, the shock absorber may allow for additional relative movement and restoring force of the nose portion **12** of the shell **18** upon impact.

Illustratively, the transducer **20** comprises a piezoelectric or seismic transducer configured to convert electrical energy to acoustic energy (through mechanical vibration), and vice versa. As shown in FIGS. **2**-**3**B, an illustrative transducer **20** includes an active element **50** such as a piezoelectric cell configured to convert an acoustic signal (e.g. mechanical vibration) into an electrical signal, and to convert an electrical signal into an acoustic signal (e.g. mechanical vibration). Active element **50** may be made of piezoelectric ceramic, crystal, or magnetostrictive material. Active element **50** is illustratively positioned near outer surface **28** of shell **18** to define a seismic coupling for transferring acoustic signals therethrough and into the ground **158** (FIG. **8**). In another illustrative embodiment, projectile **10** includes a plurality of transducers **20** including a first transducer for transmitting or radiating signals and a second transducer for receiving signals.

In the illustrative embodiment of FIG. **4**, the transducer **20** may be coupled to a seismic mass **38** within the nose portion **12** so that the entire projectile **10** moves in response to movement of the mass **38** by the transducer **20**. Such an arrangement eliminates the need for a transmission member **21** on the shell **18**. A plurality of resilient members, such as springs **40**, limits movement of the seismic mass **38** and provides a restoring force. In certain illustrative embodiments, the springs **40** may be replaced with additional transducers **20**.

The transducer **20** is configured to vibrate and cause acoustic or seismic waves to propagate though the ground **158**. As noted above, transmission member **21** is configured to permit movement of the transducer **20** relative to the shell **18**. As shown in FIG. **5**, a side portion **42** of the shell **18** may be coupled to the transducer **20** for relative traverse movement therewith relative to the remainder of the body portion **16** (see

arrow **43**). As such, the side portion **42** defines an acoustical or seismic coupling to the ground **158**.

In another illustrative embodiment shown in FIG. **6**, a coupling fluid **44**, such as a gel, is received within the nose portion **12** of the projectile **10**. The coupling fluid **44** is received within a storage chamber **45** defined by the nose portion **12**. A discharge device **46**, illustratively a gas generator **47** fluidly coupled to an expandable bladder **48**, is likewise received within the storage chamber **45**. The computer **52** is operably coupled to the gas generator **47**, illustratively through a cable **49**, and is configured to cause activation thereof after the projectile **10** has been embedded in the ground **158**. Following inflation of the bladder **48** by the gas generator **47**, the coupling fluid **44** passes out of the shell **18** through weep holes **51** and fills voids **53** between the outside surface **28** of the nose portion **12** and the ground **158**. As such, the coupling fluid **44** facilitates an effective seismic coupling between the transducer **20** and the ground **158** thereby enhancing the transmission of seismic waves.

With further reference to FIG. **2**, computer or processor **52** communicates with pulse generator **24** via communication link **36**. Computer **52** is configured to send control signals to pulse generator **24** to trigger the generation of a kinetic pulse. In the illustrated embodiment, computer **52** sends a trigger signal to pulse generator **24** to cause generation of a kinetic energy pulse. In one illustrative embodiment, the trigger signal causes detonator **29** to initiate (i.e. detonate) explosive **27**. Computer **52** is further electrically connected to clock **54** and communication module **58**. Communication module **58** facilitates communication between computer **52** and transducer **20**. Computer **52**, via communication module **58**, provides control of transducer **20**, including the control of the transmission and reception of acoustic signals by transducer **20**. During a transmit mode, the communication module **58** converts digital signals from the computer **52** to required analog voltages and/or currents to move the transducer **20** the desired amount (i.e., digital to analog (D to A) conversion). Similarly, in a receive mode, the communication module **58** samples analog voltages and/or currents from the transducer **20** at the required rate and converts the samples to digital signals which are then sent to the computer **52** (i.e., analog to digital (A to D) conversion).

Computer **52** is further configured to perform various calculations and algorithms through machine readable software stored in memory (not shown). Clock **54** provides synchronization of the timing of communication between computer **52**, communication module **58**, and pulse generator **24**. Battery **56** provides power to computer **52**, clock **54**, and communication module **58**. Battery **56** is illustratively of the type configured to meet the rugged and short-term high power needs of the projectiles **10**, such as lithium, thermal, or alkaline.

As noted above, a plurality of projectiles **10** may define an array of nodes **160**, as used in the system of the present disclosure shown in FIGS. **8-13** and as further described herein. More particularly, in the illustrative embodiment each of the nodes **160** is defined by a projectile **10** of FIGS. **1-2**. However, it should be appreciated that the nodes **160** may be supported by other suitable housings or casings rather than by the shells **18** of projectiles **10**.

Although four nodes or projectiles (**160***a*, **160***b*, **160***c*, **160***d*) are shown in FIGS. **8-13**, any number of nodes **160** greater than one may be used with the illustrative system. The nodes **160** illustratively communicate by each transmitting its own unique seismic waveform (e.g., multiple frequencies or pulse coding). As used herein seismic waves include acoustic signals or sonic pulses (e.g. mechanical vibration) transmitted through the ground **158**. In the illustrative embodiment, nodes **160** communicate with each other using digitally coded sonic pulses, which are transmitted and received by transducer **20**. For example, node **160***a* is configured to transmit a digitally coded sonic pulse which is received by at least one of nodes **160***b*, **160***c*, and **160***d*. In one embodiment, nodes **160** utilize the digital modulation scheme of phase shift keying (PSK) or frequency shift keying (FSK), both well known in the art. However, any other functional digital modulation scheme may be used. By digitally coding the transmitted signals, nodes **160** are capable of uniquely identifying each of the other projectiles **160** based on the received digitally coded sonic pulse.

Still referring to FIGS. **8-13**, a target **152** is illustratively located below a surface **150** of the ground **158**. Target **152**, illustratively a hollow structure such as an underground storage unit, includes an outer wall **154** and an interior cavity **156**. Target **152** may be any underground structure, such as a shelter for mining sites, material or food storage structures, living quarters, tunnels, mine shafts, storage tanks, etc. Target **152** may provide shelter and protection to any objects, food, or persons located inside. Target **152** may also be underground objects, illustratively material mass or stiffness changes or inconsistencies within the soil, such as minerals, utilities, or underground noise sources.

Reference is made to the flowchart of FIG. **7** throughout the following description of FIGS. **8-13**. As represented by block **100** of FIG. **7**, nodes **160** are first positioned in the ground **158** near target **152**, as shown in FIG. **8**. Nodes **160** illustratively use kinetic energy to penetrate a distance into the ground **158** below surface **150**. For example, nodes **160** in the form of projectiles **10** may be launched from a remote location and, with assistance of an on-board or remote guidance system driving a propulsion device (not shown), impact a location on the surface **150** of the ground **158** at a certain velocity. Greater velocity, and hence greater kinetic energy, of projectiles **10** at impact provides a greater penetration or burrowing depth into the ground **158**. A trail of disturbed soil or hole **155** is created by each ground-penetrating projectile **10**.

In certain instances, a burrowing device (not shown) may be supported by the nose portion **12** of the projectile **10** to facilitate ground penetration. For example, a propulsion device, such as a rocket, may be used to increase the velocity of the projectile **10** at impact to facilitate deeper penetration into the ground **158**. Further, a guidance system including movable aerodynamic fins driven in response to global positioning system (GPS) inputs to the computer **52** may be utilized to improve precise spacing of impact locations of the projectiles **10** and resulting performance. Laser designation may also be utilized to facilitate desired impact locations of the projectiles **10**.

In yet other illustrative embodiments, the projectile **10** may employ speed brakes (not shown). For example, an airbag may be provided within the nose portion **12** of the projectile **10** that is inflated upon impact (to keep at least a portion of the projectile **10** above the ground surface **150**) or at a desired depth after impact (to bring burrowing of the projectile **10** to a halt). The airbag could also be deployed from the rear cavity **26** in a shape that permits pressure on side walls of the hole formed by passage of the projectile **10**. In yet other illustrative embodiments, a parachute may be deployed rearwardly from the rear cavity **26** to retard speed of the projectile **10** prior to impact. Various sensors, including an accelerometer (which may be defined by the transducer **20**) may be used to control activation of the speed brakes.

In further illustrative embodiments, nodes **160** may be placed into pre-drilled holes **155** in the ground **158** in which

a burrowing devices (not shown), such as a moles or augers supported by the nodes **160**, pre-drills the holes **155**. In such embodiments, the burrowing device may form part of each node **160** for self-drilling of the holes **155** in the ground **158**. The burrowing device may also comprise a shovel or post-hole digger for forming the holes **155** in the ground **158** prior to placement of the nodes **160**.

With nodes **160** positioned in the ground **158**, the transducer **20**, and specifically active element **50**, of each node **160** is seismically coupled with the ground **158** by being near or substantially in contact with the soil medium. As a result, signal bounce between the soil of the ground **158** and transducer **20** is substantially reduced or eliminated during the communication of signals.

As represented by block **102** of FIG. **7**, nodes **160** determine the spatial arrangement or relative positions of the array of nodes **160** after the nodes **160** have been positioned in the ground **158**. As shown in the illustrated embodiment of FIG. **8**, transducer **20** of node **160***a* transmits a digitally coded interrogation signal pulse or ping **162***a* having a pressure or pulse front (i.e., seismic wave) **164***a* in a substantially omni-directional pattern. Alternatively, transducers **20** of node **160***a* may transmit multiple interrogation signal pulses **162***a* in a directional pattern. Initiation of the interrogation signal pulse **162***a* may occur after a default time following impact of the projectile **10** with the ground surface **150**, thereby allowing time for the remaining projectiles **10** to be launched and embed within the ground **158**. A sudden load on the transducer **20** may be used to sense impact and provide a signal representative thereof to the computer **52**. Alternatively, a separate accelerometer may be coupled to the shell **18** to provide an impact signal to the controller. Upon detection of interrogation signal pulse **162***a*, transducer nodes **160***b*, **160***c*, **160***d* transmit a digitally coded signal in response, represented by response signal pulses or pings **162***b*, **162***c*, **162***d* in FIG. **9**. Response signal pulses **162***b*, **162***c*, **162***d* include pressure or pulse fronts **164***b*, **164***c*, **164***d*, respectively.

Node **160***a* receives response signal pulses **162***b*, **162***c*, **162***d* and identifies the node **160***b*, **160***c*, **160***d* associated with each unique digitally coded pulse **162***b*, **162***c*, **162***d*. By calculating each time delay between the transmission of interrogation pulse **162***a* and the receipt of response pulses **162***b*, **162***c*, **162***d*, node **160***a* determines its distance from projectiles **160***b*, **160***c*, **160***d*. As shown in FIG. **10**, computer **52** of node **160***a* ascertains distances R_{ab}, R_{ac}, R_{ad} based on the time delay between the transmission of pulse **162***a* and the receipt of pulses **162***b*, **162***c*, **162***d*, respectively. Distance R_{ab} is the distance between nodes **160***a* and **160***b*, distance R_{ac} is the distance between nodes **160***a* and **160***c*, and distance R_{ad} is the distance between nodes **160***a* and **160***d*. This process of block **102** repeats for nodes **160***b*, **160***c*, **160***d* until each node **160** has determined its distance relative to the other nodes **160** in the array. The distances calculated by each node **160** are illustratively communicated to the other nodes **160**. Each node **160***a*, **160***b*, **160***c*, **160***d* may determine the spatial arrangement, or the three-dimensional coordinates, of the array of nodes **160** based on the calculated distances. Alternatively, at least one of the nodes **160** determines the spatial arrangement and transmits the calculated spatial arrangement to the other nodes **160** in the array through coded signals from transducer **20**.

In the illustrative embodiment shown in FIG. **11**, there are at least four spatially independent nodes **160***a*, **160***b*, **160***c*, **160***d* to establish a three dimensional reference coordinate system **166** (for nodes **160** that transmit and receive in an omni-directional fashion). Spatially independent is defined as meaning that two nodes **160** are not immediately adjacent to each other (i.e., too close to establish a clear reference axis therebetween), three nodes **160** cannot be in the same line, and all four nodes **160** cannot be in the same plane. If these conditions are not met, then slight errors in calculated distances between nodes **160** may cause different (and inaccurate) orientations of the reference coordinate system **166**. Accuracy of the reference coordinate system **166** is determined by the distance errors and the degree of spatial independence of the nodes **160**. More nodes **160** will improve the accuracy due to redundancy and averaging of errors.

The reference coordinate system **166** is set by defining a primary x-axis as a line between the nodes **160** with the greatest separation. In FIG. **11**, nodes **160***a* and **160***d* have the greatest separation. Next, the primary x-y plane is defined as a plane that contains the x-axis and the next farthest node **160** from the x-axis. In FIG. **11**, node **160***c* is farthest from the x-axis. By knowing the x-axis and the x-y plane, the y-axis is defined. The z-axis is then defined as normal to the x-y plane and positive in the direction of the next farthest node **160** from the x-y plane. In FIG. **11**, node **160***b* is the next farthest from the x-y plane. The origin of the coordinate system **166** may be set as (0,0,0) at the intersection of the x, y, and z axes. In one illustrative embodiment, the origin may be set at (0,0,0) on one of the nodes **160** on the x-axis. The positions of the nodes **160** may then be calculated by the computer **52** in terms of the x, y, and z axes of the reference coordinate system **166**.

Orientation of the reference coordinate system **166** relative to the ground surface **150** may be determined in a manner similar to the method utilized to locate target **152**, only by searching for a large, relatively flat reflective surface. Location of the coordinate system **166** may be accomplished via a node **160** placed on the ground surface **150** with global positioning system (GPS) capability for relaying location information to the computer **52**.

In one embodiment, nodes **160** may communicate via an ad-hoc network where each node **160** is configured to forward information or data for other nodes **160** in the array. As such, each node **160** need not communicate with each of the other nodes **160** in the array in order to determine the spatial arrangement or perform other functions. The "outlier" nodes **160** which are at a greater distance from the other nodes **160** in the array may communicate with only one other node **160**. For example, if node **160***a* of FIG. **8** cannot communicate with node **160***d*, node **160***b* could relay or forward information transmitted from node **160***a* to node **160***d*.

After determining the spatial arrangement of nodes **160**, one of nodes **160** nominates itself as the controller **172** for the array, as represented by block **104** in FIG. **7**. The controller **172** may coordinate the communication between the nodes **160**, the detection of objects and structures in the ground, and the determination of the surrounding environment. The centermost node **160** illustratively nominates itself as the controller **172**, although any node **160** may self-nominate. In the illustrated embodiment shown in FIGS. **11** and **12**, node **160***b* is shown as nominating itself as the controller **172**. As such, computer **52** of node **160***b* becomes the master computer or controller **172** for the array of nodes **160**. After self-nominating itself, controller **172** verifies that no other node **160** in the array has also self-nominated itself as the controller **172**. Controller **172** transmits a signal to the other nodes **160***a*, **160***c*, **160***d* in the array, and any other self-nominating node **160** communicates with controller **172** to eliminate potentially conflicting controllers **172** and resolve to one controller **172** for the array.

More particularly, conflict between self-nominating controllers **172** could be resolved by comparing signal strengths between the nodes **160**, wherein each self-nominating con-

troller **172** would send the strength of its weakest signal to another node **160**. The node **160** with the stronger of the weakest signals would become the controller **172**. Other methods for resolving conflicts between self-nominating controllers **172** could also be used, including node identification. In one example, the highest serial numbered node **160** may be the controller **172**.

Time synchronization or coordination is achieved following nomination of the controller **172**. Illustratively, the controller **172** sends a time request signal to each projectile **10** which, in turn, responds with the time of its respective clock **54**. The controller **172** knows the relative distance to each node **160** and therefore the signal delay time. By knowing the signal delay times and the clock times of the other nodes **160**, the controller **172** may calculate the difference between its master clock time and the clock time of the other nodes **160**. The controller **172** may account for the relative clock time differences between nodes **160** when instructing the other nodes to activate their respective pulse generators **24**. Alternatively, the controller **172** may provide a delay time after the command detonation signal to each node **160**. The delay times or clock differences may also be used to send a transmit pulse from the entire set of nodes **160** (array) in a desired direction.

As shown by block **106** of FIG. **7**, nodes **160** initiate an acoustical signal pulse or ping sequence by pinging and recording received echoes in order to determine the surrounding environment, such as to detect the location and characteristics of objects, structures, layers of strata, etc. Upon command by controller **172**, each node **160** sequentially transmits an acoustical signal pulse or ping in an omni-directional pattern. In one illustrative embodiment, controller **172** first transmits a ping sequence to each node **160**, and nodes **160** each transmit a signal pulse at a time according to the ping sequence. Nodes **160** may transmit signal pulses in any sequence or order as determined by controller **172**. The signal pulse reflects off of changes in material density or stiffness as the signal pulse propagates through the ground **158**. For example, the signal pulse will reflect off of a change in strata or any object or structure having a different density than the surrounding soil, such as a hollow cavity, concrete structure, rock layer, etc.

The acoustical signal pulses or pings transmitted by the nodes **160** may be suitable for pulse compression such as a linear frequency modulation (LFM) pulse. This is a known technique used in radar and sonar applications to lower the peak power of a pulse and spread the energy over time. Upon receipt, the pulse is passed through a matched filter (could be hardware or software) that concentrates the energy and delivers a much higher signal to noise ratio, thereby improving the detectability of weak echos or reflections.

In the illustrative method of block **106**, node **160***a* first sends out an omni-directional signal pulse, such as signal pulse **162***a* shown in FIG. **8**. Each node **160***a*, **160***b*, **160***c*, **160***d* records any reflections received from signal pulse **162***a* reflecting off of changes in density in the surrounding environment. Nodes **160***a*, **160***b*, **160***c*, **160***d* calculate the magnitude of each received reflection and the time delay between the transmission of signal pulse **162***a* and the receipt of the reflection. Each node **160***a*, **160***b*, **160***c*, **160***d* stores the calculated reflection data in a data table, or echo history. Next, node **160***b*, illustratively controller **172**, transmits an omni-directional signal pulse, such as signal pulse **162***b* shown in FIG. **9**, and each node **160***a*, **160***b*, **160***c*, **160***d* records the time delay and magnitude of any received reflections in the data table. The process of block **106** repeats for nodes **160***c* and **160***d*. Although the signal pulse is illustratively omni-directional, nodes **160** may alternatively transmit a directional or bi-directional signal pulse in a plurality of directions to cover the entire surrounding area.

After nodes **160** complete the ping sequence of block **106**, nodes **160** each send the calculated echo histories containing the reflection magnitude and time delay data to controller **172**, as represented by block **108** of FIG. **7**. Nodes **160** may alternatively send the echo histories to controller **172** at any time during the ping sequence of block **106**, such as after each projectile transmits a signal pulse. Nodes **160** illustratively transmit the echo histories via coded acoustic signals, although other means of communication may be used.

As shown in block **110** of FIG. **7**, controller **172** illustratively compiles all of the echo histories received by nodes **160** into a master echo table which is stored in memory. Controller **172** is configured to filter the data to eliminate false reads. Based on the reflection data in the master echo table and the calculated spatial arrangement of nodes **160**, controller **172** determines the location of underground structures or objects in the surrounding environment, as represented by block **112**. Controller **172** may also determine the approximate size and density of each identified structure or object as well as the location of surface **150**.

As represented by block **114**, controller **172** selects a target **152** from the objects and structures identified in the surrounding environment in block **112**. Controller **172** illustratively selects the largest object as the target **152** or the object from which the strongest reflection was received by nodes **160**. As shown in FIGS. **8-13**, the selected target **152** is illustratively an underground storage unit. Controller **172** may also select a target based on pre-determined criteria. Target **152** may alternatively be a specified location and depth rather than an object or structure. In one embodiment, controller **172** is unable to select a target that matches the pre-determined criteria, and thus any further operation is altered or terminated.

After selecting the target, controller **172** calculates a pulse generation timing sequence and sends the timing sequence to nodes **160**, as represented by blocks **116** and **118** of FIG. **7**. Nodes **160** illustratively confirm receipt of the timing sequence. If all nodes **160** do not send confirmation, controller **172** illustratively resends the timing sequence at least once before operation is altered or terminated. Controller **172** uses the timing sequence for selectively controlling the generation of a kinetic pulse or seismic wave from each node **160** to create a kinetic pulse, or seismic wave, array **174**, such as shown in FIGS. **12** and **13**. Controller **172** calculates the timing sequence based on the spatial arrangement of the nodes **160** and the location of target **152**. By controlling the timing of the generation of kinetic pulses from nodes **160**, a kinetic pulse array **174** can be formed having an array pressure front directed toward a particular target or focal point **175**. Once nodes **160** have confirmed receipt of the timing sequence from controller **172**, controller **172** commands the initiation of the pulse generation sequence, as represented by block **120** of FIG. **7**.

As shown in FIG. **12**, the pulse generator **24** of each node **160***a*, **160***b*, **160***c*, **160***d* generates a kinetic pulse or seismic wave having a pulse front **164***a*, **164***b*, **164***c*, **164***d*, respectively, upon command by controller **172**. Alternatively, each transducer **20** of nodes **160** may generate a kinetic pulse to create the kinetic pulse array. The maximum energy of the resulting kinetic pulse array **174** is at the array pressure front **170**, which is the focal point **175** where the pulse fronts **164***a*, **164***b*, **164***c*, **164***d* of the kinetic pulses intersect. In FIG. **12**, kinetic pulse array **174** is illustratively directed away from target **152** to focal point **175***a*. For example, focal point **175***a* of FIG. **12** illustratively is the point where pulse fronts **164***a*,

164*b*, **164***c*, **164***d* intersect when the pulse generators of nodes **160***a*, **160***b*, **160***c*, **160***d* are all activated simultaneously. In FIG. **13**, kinetic pulse array **174** is directed towards target **152**, and the array pressure front **170** arrives at outer wall **154** of target **152** at focal point **175***b*. More particularly, given the calculated spatial arrangement of nodes **160***a*, **160***b*, **160***c*, **160***d* and target **152**, the controller **172** coordinates the timing of activation of the pulse generators **24** such that the pulse fronts **164***a*, **164***b*, **164***c*, **164***d* arrive at focal point **175***b*. In the illustrative embodiment, the pulse generator **24** of nodes **160***a*, **160***b*, **160***c*, **160***d* includes explosive **27**. By focusing the array pressure front **170** of kinetic pulse array **174** on target **152**, a maximum destructive force will be imposed on target **152**.

In one illustrative embodiment, transducers **20** of nodes **160** test the kinetic pulse generation sequence by transmitting a sonic pulse according to the timing sequence prior to the generation of the kinetic pulse array. As such, the accuracy of the kinetic pulse array may be confirmed and adjustments may be made prior to the initiation of the kinetic pulse generation sequence.

As detailed above, the kinetic pulse generator of each node **160** may comprise an explosive **27** coupled to a detonator **29** which is activated by the computer **52**. In certain embodiments, a fuel air explosive (FAE) may be distributed above the ground surface **150** and substantially centered about the target **152**. Multiple initiators (not shown) may be positioned on the ground surface **150** for coordinated activation by the controller **172**. The initiators may be timed and/or controlled wirelessly (e.g. through RF) to detonate the FAE in concentrically decreasing rings that may send a focused shock wave downward toward the target **152**.

In a further illustrative embodiment, as shown in FIG. **14**, controller **180** is partially buried in the ground. Controller **180** having a transducer **186** is positioned at ground surface **150**. Controller **180** is separate and remote from nodes **160**, and communicates with nodes **160** via transducer **186**, which is illustratively substantially in contact with the ground **158** to reduce signal bounce. Similar to controller **172** of FIGS. **12** and **13**, controller **180** coordinates the communication between nodes **160**, the detection of objects and structures in the ground **158**, and the determination of the surrounding environment.

Controller **180** further illustratively includes an antenna **182** for communicating via signals or waves **186** with a remote or off-site control unit. In certain illustrative embodiments, the antenna **182** may be supported by the rear cavity of the projectile **10** in either a static form or a deployable form. Illustratively, the antenna **182** may be removably supported by the shell **18** such that upon impact with the ground **158**, the antenna **182** physically separates from the projectile **10** while remaining in communication with the computer **52** either through a wired or wireless connection. In other illustrative embodiments, the projectiles **10** may be deployed in clusters with fiber optic lines coupled to each at a rear connection point and unwound from a coil during deployment. In another illustrative embodiment, controller **180** may be mounted to a movable support, such as an aircraft or ground vehicle, and communicates with nodes **160** from a remote location.

While the system of FIGS. **7-14** is described above for physically altering an underground target **152**, the system may be used for a variety of other applications. In one further illustrative embodiment, the above described system may be used for mining applications or advanced cracking techniques, such as rock or concrete cracking. In another illustrative embodiment, the system may be used for mapping and creating images of underground objects or voids, determining an underground environment for down-hole drilling or mineral extraction, or scrambling or interfering with a noise source or electromagnetic source. In another illustrative embodiment, a microphone may be used to listen to and record sound waves from a certain direction. For example, sound waves from inside the target (e.g. underground structure) may be combined to increase gain and reduce interference such that audible activity within the target may be listened to and/or recorded. Microphones may also define a security perimeter device including an audible trigger (i.e. tripwire) to detect sound waves, for example from the movement of personnel, and/or vehicles, and/or aircraft in the vicinity of the array. In still another embodiment, the projectiles may be positioned under water.

While this invention has been described as having an exemplary design, the present invention may be further modified within the spirit and scope of this disclosure. This application is therefore intended to cover any variations, uses, or adaptations of the invention using its general principles. Further, this application is intended to cover such departures from the present disclosure as come within known or customary practice in the art to which this invention pertains.

The invention claimed is:

1. A locator system configured to locate ground-penetrating projectiles, the locator system including:

a plurality of ground penetrating projectiles positioned within the ground, each projectile configured to communicate with at least one other projectile;

a plurality of transducers, at least one transducer positioned in each projectile and configured to transmit a first signal to the at least one other projectile and to receive a second signal from the at least one other projectile; and

a processor supported by each projectile and configured to determine a spatial arrangement of the plurality of projectiles based on a time delay between the first and second signals, the processor being in communication with the at least one transducer.

2. The locator system of claim **1**, wherein the plurality of transducers are configured to transmit and receive acoustic pulses.

3. The locator system of claim **2**, wherein the plurality of transducers are piezoelectric transducers.

4. The locator system of claim **1**, wherein the at least one other projectile is configured to transmits the second signal in response to receiving the first signal.

5. The locator system of claim **1**, further including a communication module supported by each projectile for providing communication between the at least one transducer and the computer.

6. The locator system of claim **1**, wherein the first and second signals are digitally coded pulses.

7. The locator system of claim **1**, wherein the at least one transducer is operably coupled with the ground.

8. The locator system of claim **1**, wherein each projectile includes a shell, and a transmission coupling operably coupled to the shell and the at least one transducer for permitting relative movement therebetween.

9. The locator system of claim **1**, further including a master controller in communication with the plurality of projectiles, wherein the master controller is configured to determine the spatial relationship of each projectile relative to the other projectiles.

10. The locator system of claim **9**, wherein the master controller is a processor positioned in one of the plurality of projectiles.

11. The locator system of claim **10**, wherein the master controller is nominated based upon its position relative to the plurality of projectiles.

12. The locator system of claim **1**, wherein each projectile is further equipped with a pulse generator in communication with the computer, the computer providing control to the pulse generator.

13. The locator system of claim **1**, wherein transducers each include a transmitter and a receiver.

14. The locator system of claim **1**, further comprising a microphone operably coupled to the processor and configured to detect audible activity transmitted through the ground.

15. The locator system of claim **1**, further comprising an antenna operably coupled to the processor configured to establish a communication link with a remote control unit.

16. A method of determining the spatial arrangement of a plurality of ground-penetrating projectiles, including the steps of

providing a plurality of ground-penetrating projectiles, each projectile having at least one transducer configured to communicate signals with at least one other projectile;

positioning the plurality of projectiles in the ground;

communicating signals between the plurality of projectiles; and

determining a spatial arrangement of the plurality of projectiles based on the communicating step.

17. The method of claim **16**, wherein during the communicating step each projectile transmits a first signal to the at least one other projectile and receives a second signal from the at least one other projectile.

18. The method of claim **17**, wherein the at least one other projectile transmits the second signal in response to receiving the first signal.

19. The method of claim **17**, wherein the determining step includes calculating a delay time between the first and second signals and ascertaining a distance between each projectile based on the delay time.

20. The method of claim **19**, wherein the spatial arrangement of the plurality of projectiles is determined based on the ascertained distance between each projectile.

21. The method of claim **16**, wherein each projectile determines the spatial arrangement of the plurality of projectiles.

22. The method of claim **16**, wherein the signals are digitally coded pulses.

23. The method of claim **16**, wherein the at least one transducer is substantially in contact with the ground during the communicating step.

24. The method of claim **16**, wherein the at least one transducer is configured to transmit and receive a sonic pulse.

25. The method of claim **24**, wherein the at least one transducer is a piezoelectric transducer.

26. The method of claim **16**, further comprising the steps of airborne deployment of the projectiles, and burrowing the projectiles within the ground.

27. The method of claim **16**, further comprising the step listening for audible activity through the ground.

28. The method of claim **16**, further comprising establishing a radio frequency link with a remote control unit above the ground.

* * * * *