US008058189B1

(12) **United States Patent**
Nematollahi et al.

(10) **Patent No.: US 8,058,189 B1**
(45) **Date of Patent: Nov. 15, 2011**

(54) **METHOD AND APPARATUS FOR RESISTING BALLISTIC IMPACT**

(75) Inventors: **Khosrow Nematollahi**, Carmel, IN (US); **Robert L. Hager**, Loogootee, IN (US)

(73) Assignee: **The United States of America as represented by the Secretary of the Navy**, Washington, DC (US)

(*) Notice: Subject to any disclaimer, the term of this patent is extended or adjusted under 35 U.S.C. 154(b) by 759 days.

(21) Appl. No.: **12/028,796**

(22) Filed: **Feb. 9, 2008**
(Under 37 CFR 1.47)

Related U.S. Application Data

(63) Continuation-in-part of application No. 11/653,480, filed on Jan. 11, 2007.

(60) Provisional application No. 60/762,561, filed on Jan. 13, 2006.

(51) **Int. Cl.**
B32B 27/04 (2006.01)
B05D 5/12 (2006.01)

(52) **U.S. Cl.** **442/134**; 89/36.01; 89/36.02; 206/317; 427/561; 427/564; 427/96.9; 427/97.1; 428/105; 2/2.5; 442/135

(58) **Field of Classification Search** 2/2.5; 89/36.01, 89/36.02; 206/317; 428/105, 911; 442/134, 442/135; 427/561, 564, 96.9, 97.1
See application file for complete search history.

(56) **References Cited**

U.S. PATENT DOCUMENTS

4,027,601	A	6/1977	Hickerson
4,432,285	A	2/1984	Boyars et al.
4,440,296	A	4/1984	Howe et al.
4,586,602	A	5/1986	Levey
4,813,334	A	3/1989	Bloks et al.
5,221,807	A	6/1993	Vives
5,705,764	A	1/1998	Schade et al.
5,738,925	A	4/1998	Chaput
5,824,940	A	10/1998	Chediak et al.
6,341,708	B1	1/2002	Palley et al.
6,347,700	B1	2/2002	Redfield et al.
6,497,966	B2	12/2002	Cohen
7,204,183	B2	4/2007	Cirillo
2007/0034074	A1	2/2007	Ravid et al.
2007/0089597	A1	4/2007	Ma
2008/0171166	A1	7/2008	Nematollahi

Primary Examiner — Arti Singh-Pandey
(74) *Attorney, Agent, or Firm* — Christopher A. Monsey

(57) **ABSTRACT**

A method and apparatus for resisting ballistic impact including an outer energy absorbing assembly having a plurality of interconnected fibers, and a barrier positioned behind the outer energy absorbing assembly. A movement restraint is positioned behind the barrier and a dampener is positioned intermediate the barrier and the restraint.

29 Claims, 7 Drawing Sheets

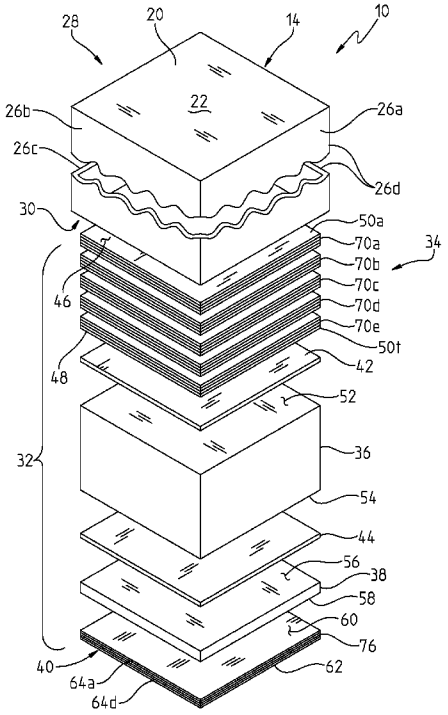

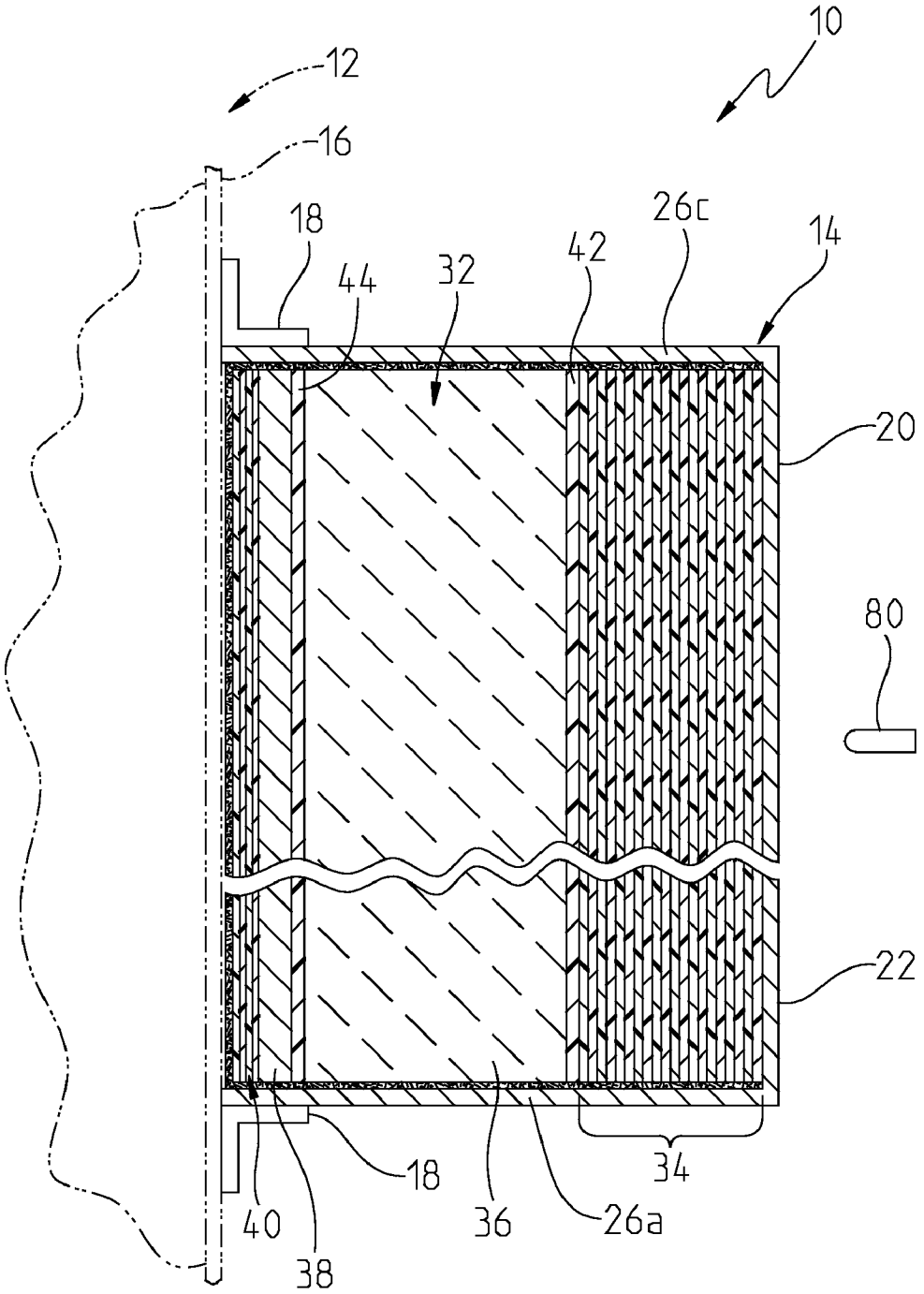

FIG. 1

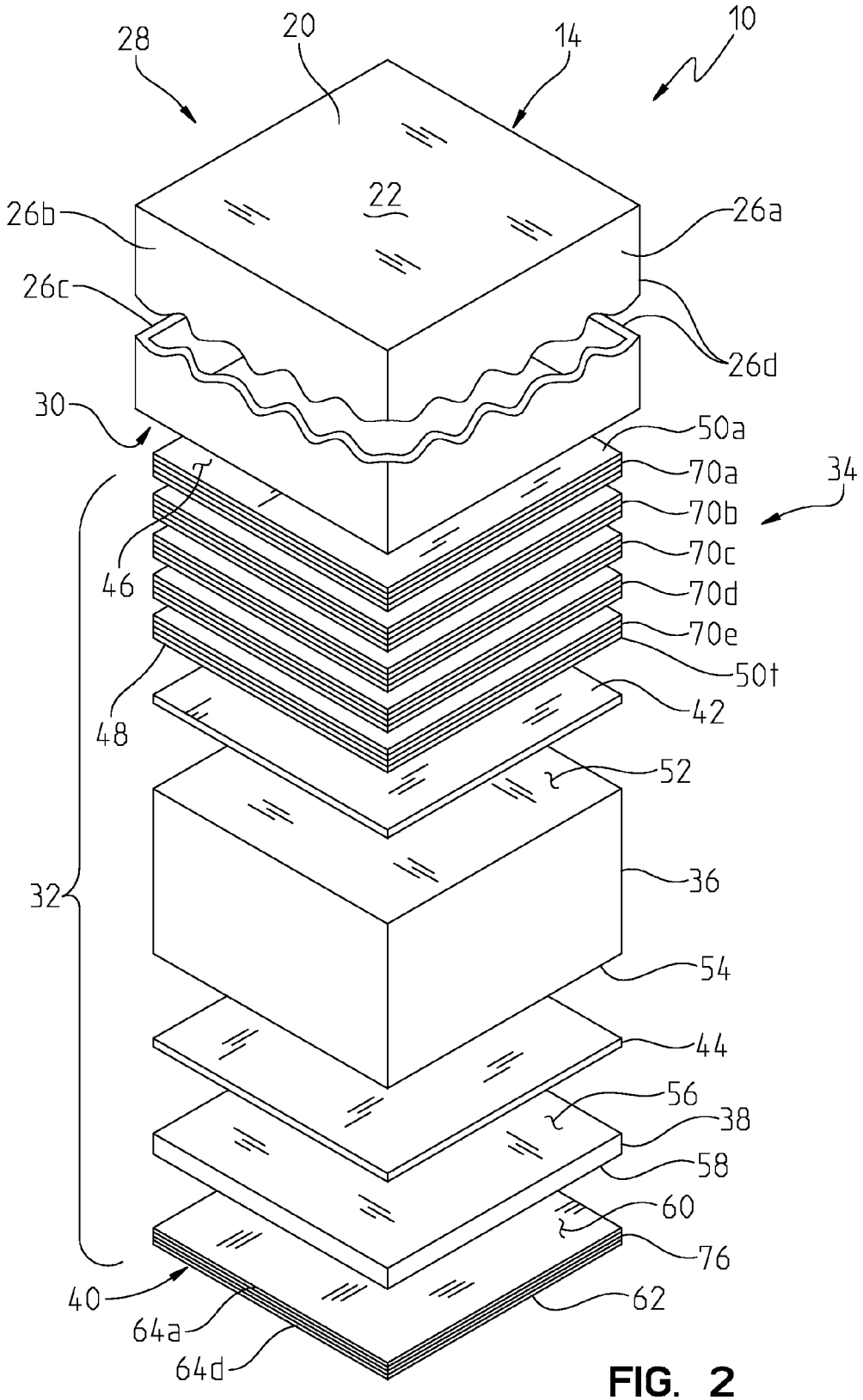
28
20
14
10
22
26b
26a
26c
26d
30
50a
70a
34
70b
70c
46
70d
70e
50t
48
42
52
32
36
54
44
56
38
58
60
76
40
62
64a
64d

FIG. 2

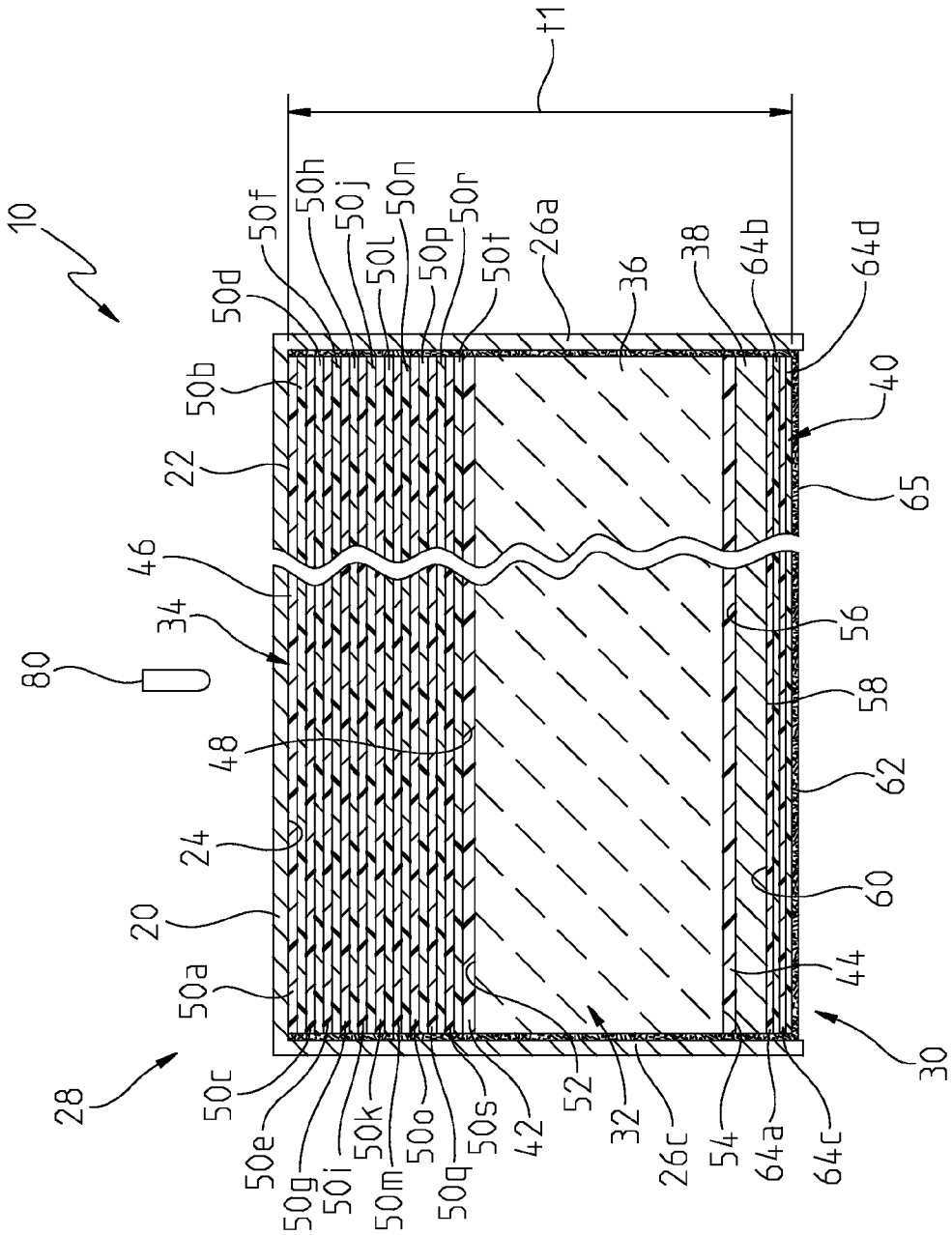
t1
10
50f
50h
50j
50n
50r
26a
38
64b
64d
50d
36
50b
40
22
65
46
34
56
80
58
48
62
24
60
20
44
50a
30
28
50c
52
32
26c
54
64a
64c
50e
50g
50i
50k
50m
50o
50q
50s
42

FIG. 3

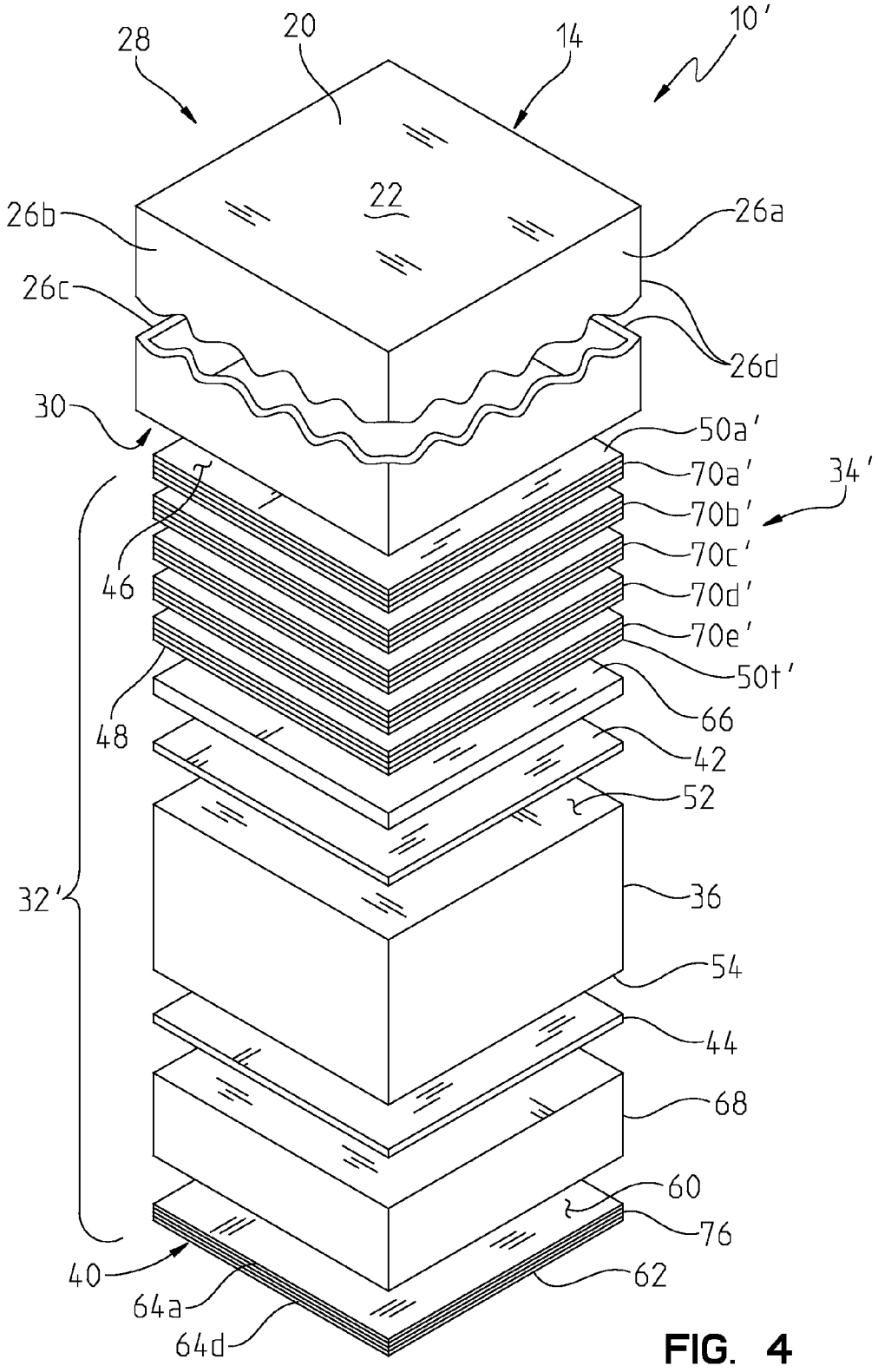
28
20
14
10'
22
26b
26a
26c
26d
30
50a'
70a'
34'
70b'
70c'
46
70d'
70e'
50t'
66
48
42
52
32'
36
54
44
68
60
76
40
62
64a
64d

FIG. 4

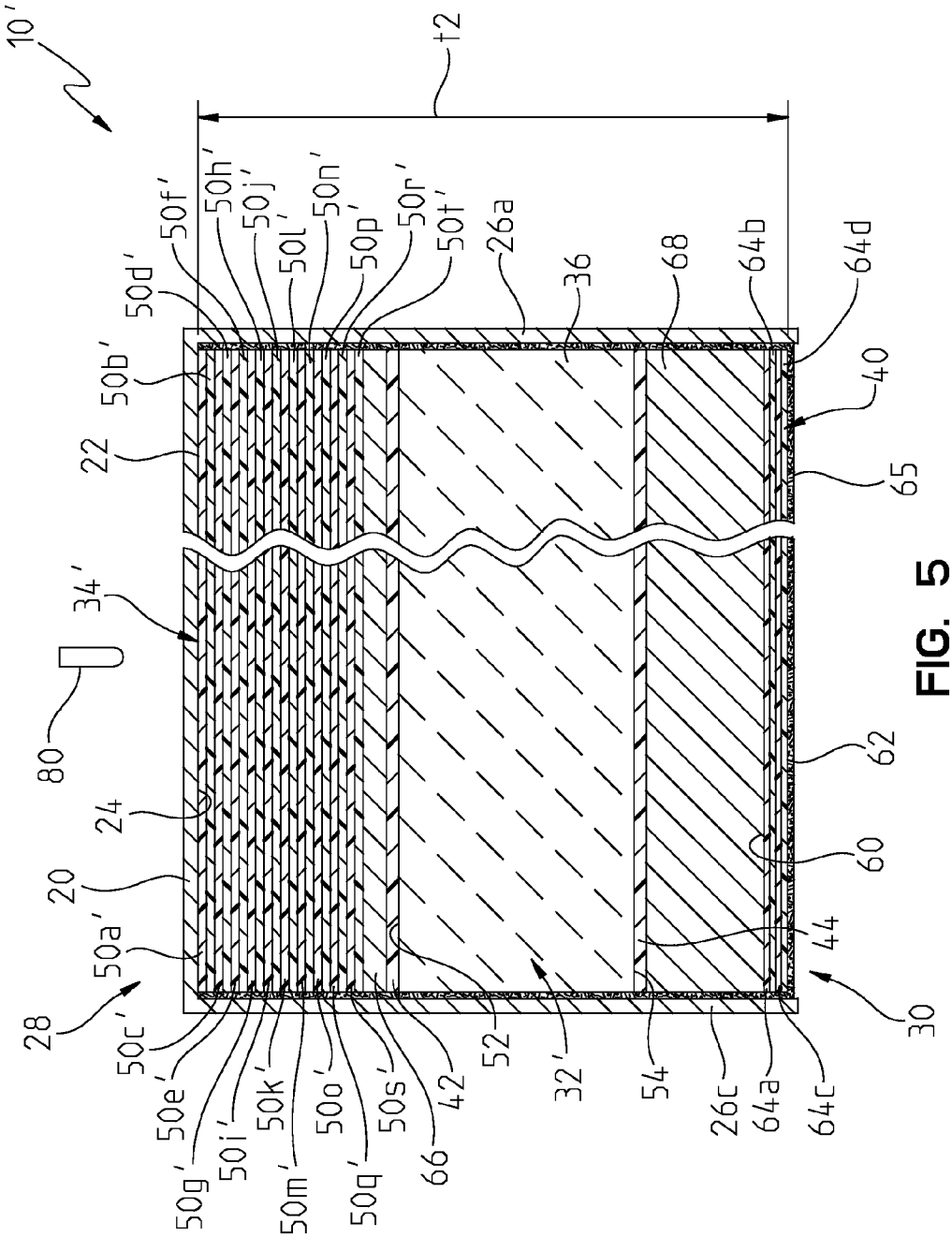
10'
t2
50f'
50h'
50j'
50l'
50n'
50p'
50r'
50t'
26a
36
68
64b
64d
50d'
50b'
22
40
65
34'
80
24
20
50a'
28
50c'
50e'
50g'
50i'
50k'
50m'
50o'
50q'
50s'
66
42
52
32'
54
26c
64a
64c
30
44
60
62

FIG. 5

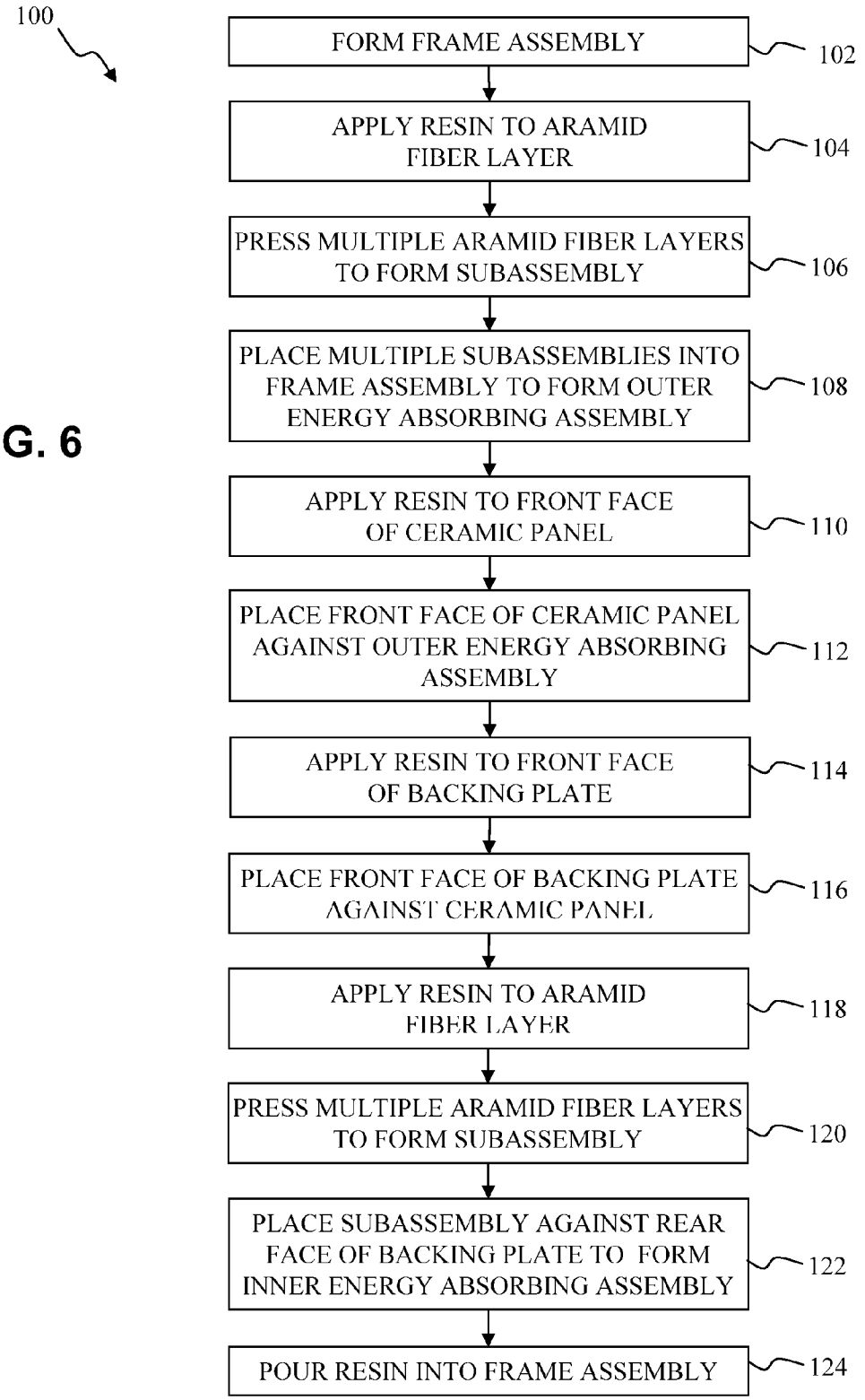
100
FORM FRAME ASSEMBLY
102
APPLY RESIN TO ARAMID FIBER LAYER
104
PRESS MULTIPLE ARAMID FIBER LAYERS TO FORM SUBASSEMBLY
106
PLACE MULTIPLE SUBASSEMBLIES INTO FRAME ASSEMBLY TO FORM OUTER ENERGY ABSORBING ASSEMBLY
108
APPLY RESIN TO FRONT FACE OF CERAMIC PANEL
110
PLACE FRONT FACE OF CERAMIC PANEL AGAINST OUTER ENERGY ABSORBING ASSEMBLY
112
APPLY RESIN TO FRONT FACE OF BACKING PLATE
114
PLACE FRONT FACE OF BACKING PLATE AGAINST CERAMIC PANEL
116
APPLY RESIN TO ARAMID FIBER LAYER
118
PRESS MULTIPLE ARAMID FIBER LAYERS TO FORM SUBASSEMBLY
120
PLACE SUBASSEMBLY AGAINST REAR FACE OF BACKING PLATE TO FORM INNER ENERGY ABSORBING ASSEMBLY
122
POUR RESIN INTO FRAME ASSEMBLY
124

FIG. 6

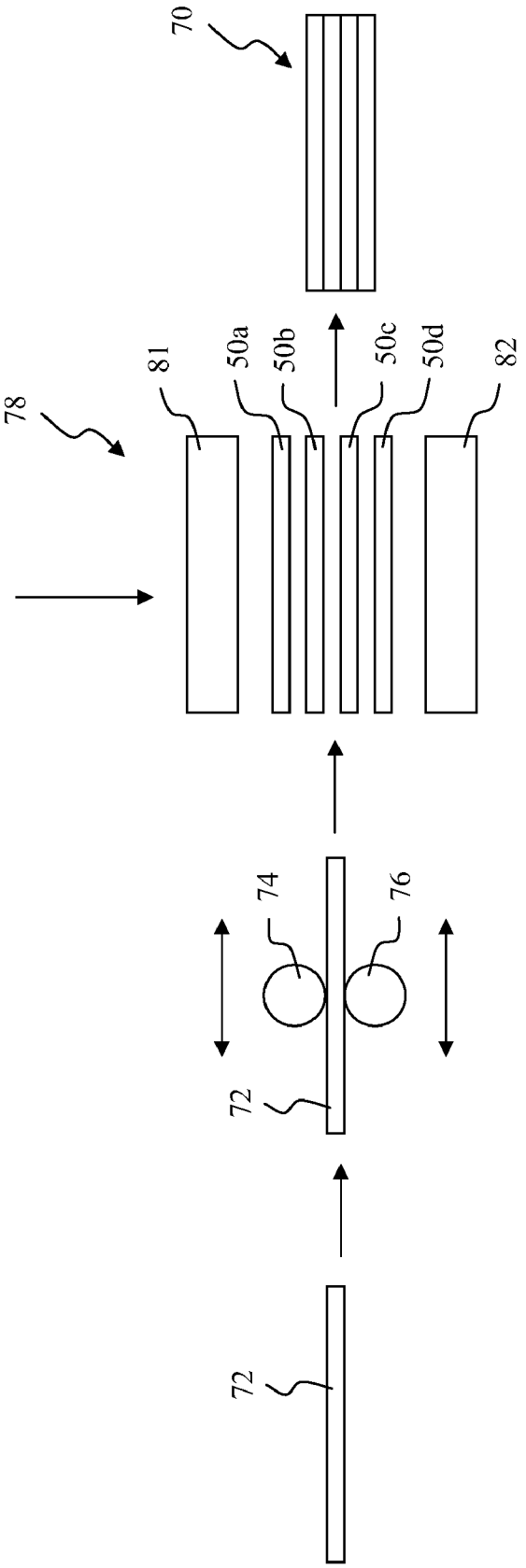

FIG. 7

METHOD AND APPARATUS FOR RESISTING BALLISTIC IMPACT

CROSS-REFERENCE TO RELATED APPLICATIONS

This application is a continuation-in-part of U.S. patent application Ser. No. 11/653,480, filed Jan. 11, 2007, which claims priority to U.S. Provisional Patent Application Ser. No. 60/762,561, filed Jan. 13, 2006, the disclosures of which are expressly incorporated by reference herein.

STATEMENT REGARDING FEDERALLY SPONSORED RESEARCH OR DEVELOPMENT

The inventions described herein may be manufactured, used and licensed by or for the U.S. Government.

BACKGROUND OF THE INVENTION

The present invention relates to a method and apparatus for resisting ballistic impact, and more particularly to a ballistic resistant composite structure and its related method of manufacture.

There has been an increased emphasis on compliance with ballistic impact standards in an effort to improve anti-ballistic protection for people and property. Potential applications for anti-ballistic structures include body armor, vehicle protection, building protection, and ordnance transit containers.

SUMMARY OF THE INVENTION

According to an illustrative embodiment of the present invention, a ballistic resistant apparatus includes an outer energy absorbing assembly including a front face, a rear face, and a plurality of layers, each of the layers including a plurality of interconnected fibers. The outer energy absorbing assembly is configured to absorb energy from a projectile traveling from the front face toward the rear face. A barrier includes a front face and a rear face, the front face of the barrier being positioned behind the rear face of the outer energy absorbing assembly, and is configured to further absorb energy from the projectile. A movement restraint includes a front face and a rear face, the front face of the restraint being positioned behind the rear face of the barrier. The restraint is configured to limit movement of the outer energy absorbing assembly in response to impact from the projectile. A dampener is positioned intermediate the barrier and the restraint. The dampener is configured to cooperate with the restraint to dampen energy from the projectile as transferred from the barrier.

According to a further illustrative embodiment, a method of manufacturing a ballistic resistant composite structure includes the steps of providing a first layer of interconnected fibers, coating the first layer with a resin, providing a second layer of interconnected fibers, and coating the second layer with a resin. The method further comprises the steps of pressing together the first layer and the second layer to form an energy absorbing assembly. The method further comprises the steps of providing a barrier having a front face and a rear face, placing the front face of the barrier adjacent the energy absorbing assembly, coating the rear face of the barrier with a resin, providing a backing plate having a front face and a rear face, and pressing the front face of the backing plate against the resin on the rear face of the barrier.

BRIEF DESCRIPTION OF THE DRAWINGS

The foregoing aspects and many of the attendant advantages of this invention will become more readily appreciated as the same become better understood by reference to the following detailed description when taken in conjunction with the accompanying drawings.

FIG. **1** is a cross-sectional view showing an illustrative ballistic resistant apparatus coupled to a vehicle;

FIG. **2** is an exploded perspective view of an illustrative ballistic resistant apparatus;

FIG. **3** is a cross-sectional view of the ballistic resistant apparatus of FIG. **2**;

FIG. **4** is an exploded perspective view of a further illustrative ballistic resistant apparatus;

FIG. **5** is a cross-sectional view of the ballistic resistant apparatus of FIG. **4**;

FIG. **6** is a block diagram of an illustrative method of forming the ballistic resistant apparatus of FIG. **2**; and

FIG. **7** is a schematic diagram further detailing the illustrative method of FIG. **6**.

Corresponding reference characters indicate corresponding parts throughout the several views. Although the drawings represent embodiments of various features and components according to the present invention, the drawings are not necessarily to scale and certain features may be exaggerated in order to better illustrate and explain the present invention. The exemplification set out herein illustrates embodiments of the invention, and such exemplifications are not to be construed as limiting the scope of the invention in any manner.

DETAILED DESCRIPTION OF THE DRAWINGS

For the purposes of promoting an understanding of the principles of the invention, reference will now be made to the embodiments illustrated in the drawings, which are described below. The embodiments disclosed below are not intended to be exhaustive or limit the invention to the precise form disclosed in the following detailed description. Rather, the embodiments are chosen and described so that others skilled in the art may utilize their teachings. It will be understood that no limitation of the scope of the invention is thereby intended. The invention includes any alterations and further modifications in the illustrated devices and described methods and further applications of the principles of the invention which would normally occur to one skilled in the art to which the invention relates.

Referring initially to FIG. **1**, an illustrative ballistic resistant apparatus **10** is shown coupled to a vehicle **12**. In one illustrative embodiment, the ballistic resistant apparatus **10** includes a frame assembly **14** which is coupled to a door **16** of the vehicle **12** through conventional fastening means. While brackets **18** are shown for being bolted to the door **16**, it should be appreciated that other fastening means could be used, such as welding or adhesives. In further illustrative embodiments, the frame assembly **14** may be formed as an integral part of the door **16**.

While FIG. **1** shows the ballistic resistant apparatus **10** coupled to a vehicle, it should be appreciated that the apparatus **10** may be used in connection with other applications, such as building protection, containers, and body armor. For example, the ballistic resistant apparatus **10** may be utilized in connection with a variety of modes of commercial transportation, such as planes, helicopters, trains, and buses that may need to be secured from a sniper attack. Furthermore, the ballistic resistant apparatus **10** may be utilized to protect sensitive buildings and installations from ballistic threats.

With further reference now to FIGS. **2** and **3**, the frame assembly **14** includes an outer strike plate **20** having a front face **22** and a rear face **24**. Illustratively, the strike plate **20** is formed of an aluminum plate having a square periphery of

about 8 inches by 8 inches and a of thickness of about 0.0625 inches. A plurality of side walls **26** extend downwardly from the outer strike plate **20** in perpendicular relationship thereto, such that the frame assembly **14** generally defines a box having a closed end **28** defined by the strike plate **20** and an open end **30** defined by the side walls **26**. Each of the side walls **26***a*, **26***b*, **26***c*, and **26***d* is also illustratively formed of an aluminum plate having a thickness of about 0.0625 inches.

A core or composite structure **32** is received within the open end **30** of the frame assembly **14**. The core **32** is configured to prevent penetration of a 0.50 caliber bullet, and illustratively has a thickness (t**1**) of approximately 2 inches and an areal density of about 22 lbs. per square foot (equating to about 0.076 lbs. per cubic inch).

The core **32** includes an outer energy absorbing assembly **34**, a barrier, such as ceramic panel **36**, a movement restraint, such as backing plate **38**, and an inner energy absorbing assembly **40**. An outer dampener, illustratively outer resin layer **42**, is illustratively positioned intermediate the outer energy absorbing assembly **34** and the ceramic panel **36**, and an inner dampener, illustratively inner resin layer **44**, is positioned intermediate the ceramic panel **36** and the backing plate **38**. The resin layers **42** and **44** are illustratively a polyurethane such as Conathane EN-1556 available from Conap, Inc.

The outer energy absorbing assembly **34** illustratively includes a front face **46** and a rear face **48**. The front face **46** of the outer energy absorbing assembly **34** is positioned behind and adjacent to the rear face **24** of the outer strike plate **20**. The outer energy absorbing assembly **34** illustratively includes at least 15 juxtaposed layers **50** formed of interconnected aramid fibers impregnated with a resin. In one illustrative embodiment, the interconnected aramid fibers are Kevlar® available from DuPont, and the impregnated resin is a polyurethane, such as Conathane EN-1556.

In the embodiment shown in FIGS. **2** and **3**, outer layer **50***a* of the outer energy absorbing assembly **34** is positioned adjacent to, and illustratively contacts, the rear face **24** of the outer strike plate **20**, while an inner layer **50***t* of the outer energy absorbing assembly **34** is positioned adjacent the ceramic panel **36**. Eighteen additional intermediate layers **50***b*-**50***s* are positioned intermediate the outer layer **50***a* and the inner layer **50***t* of the outer energy absorbing assembly **34**. Each of the layers **50** have a thickness of about 0.035 inches, such that the outer energy absorbing assembly **34** has a total thickness of about 0.5 inches.

The ceramic panel **36** includes a front face **52** and a rear face **54**, the front face **52** being positioned behind and adjacent to the rear face **48** of the outer energy absorbing assembly **34**. The ceramic panel **36** illustratively has a thickness as measured between the front face **52** and the rear face **54** of at least one inch. In one illustrative embodiment, the ceramic panel **36** preferably includes 90% high-density alumina.

The outer resin layer **42** is illustratively formed of a polyurethane, again such as Conathane EN-1556, and adheres the ceramic panel **36** to the outer energy absorbing assembly **34**. The outer resin layer **42** illustratively has a thickness of about 0.05 inches. The backing plate **38** is illustratively formed of aluminum having a thickness of at least 0.125 inches. The backing plate **38** includes a front face **56** and rear face **58**, the front face **56** is positioned behind and adjacent to the rear face **54** of the ceramic panel **36**. The inner resin layer **44**, illustratively polyurethane such as Conathane EN-1556, is positioned intermediate the ceramic panel **36** and the backing plate **38**, and is configured to adhere the ceramic panel **36** to the backing plate **38**.

The inner energy absorbing assembly **40** includes a front face **60** and a rear face **62**, the front face **60** being positioned behind and adjacent to the rear face **58** of the backing plate **38**. In the embodiment of FIGS. **2** and **3**, the inner energy absorbing assembly **40** includes an outer layer **64***a*, an inner layer **64***d*, and two intermediate layers **64***b* and **64***c* positioned intermediate the outer layer **64***a* and the inner layer **64***d*. Each of the layers **64** includes a plurality of interconnected aramid fibers impregnated with a resin. As with the outer energy absorbing assembly **34**, the layers **64** of the inner energy absorbing assembly **40** are illustratively formed of Kevlar® impregnated with a polyurethane, such as Conathane EN-1556. As further detailed herein, a potting compound **65**, illustratively a resin such as polyurethane Conathane EN-1556, fills the spaces or gaps between the core **32** and the frame assembly **14**.

FIGS. **4** and **5** illustrate a further illustrative embodiment of the ballistic resistant apparatus **10'** including a core **32'** received within the frame assembly **14**. The core **32'** is configured to prevent penetration of a 0.50 caliber bullet, and illustratively has a thickness (t**2**) of approximately 3 inches and an areal density of about 34.5 lbs. per square foot (equivalent to about 0.08 lbs. per cubic inch). Many of the components of the ballistic resistant apparatus **10'** are similar to the ballistic resistant apparatus **10** detailed above. As such, in the following description like reference numbers will be used to identify similar components.

The core **32'** includes an outer energy absorbing assembly **34'**, a first backing plate **66**, ceramic panel **36**, a second backing plate **68**, and inner energy absorbing assembly **40**. The outer energy absorbing assembly **34'** of FIGS. **4** and **5** is similar to assembly **34** detailed above, but with each layer **50'** having a thickness of about 0.025 inches.

First backing plate **66** is illustratively positioned intermediate the ceramic panel **36** and the outer energy absorbing assembly **34'** and is formed of 0.1 inch steel. As with the ballistic resistant apparatus **10** of FIGS. **2** and **3**, the ballistic resistant apparatus **10'** includes outer and inner resin layers **42** and **44** positioned adjacent the ceramic panel **36**. The ceramic panel **36** may be identical to that detailed above. In the embodiment of FIGS. **4** and **5**, the second backing plate **68** is formed of 0.5 inch steel. The inner energy absorbing assembly **40** is illustratively identical to that detailed above with respect to the embodiment of FIGS. **2** and **3**.

With reference now to FIGS. **6** and **7**, an illustrative method **100** of manufacturing the ballistic resistant apparatus **10** begins with forming the frame assembly **14** at step **102**. As noted above, the frame assembly **14** illustratively includes an aluminum outer strike plate **20** and side walls **26**. The strike plate **20** and side walls **26** may be formed of conventional aluminum plates which are welded together to form the open box structure illustrated in FIGS. **2** and **3**. The core **32** is assembled within the frame assembly **14** by inverting the assembly **14** so that it is supported by the strike plate **20** and the open end **30** is accessible. A plurality of outer energy absorbing subassemblies **70** are then place within the frame assembly **14**.

With further reference to FIGS. **7** and **8**, each subassembly **70** is formed by initially providing a conventional layer **72** of aramid fibers. At step **104**, the aramid fiber layer **72** is then coated with a polyurethane which impregnates the fibers. The polyurethane impregnation improves the burst strength and the effectiveness of the aramid fibers. The coating process may be accomplished manually through the use of conventional application tools, such as brushes, or the aramid fiber layer **72** may be passed through a pair of coating rollers **74** and **76** (FIG. **7**). In the illustrative embodiment, four of the

polyurethane impregnated aramid fiber layers **50** are then assembled or stacked within a press **78**. An upper platen **81** applies force in a direction toward a base **82** thereby pressing the individual layers **50** together and forming subassembly **70** at step **108**. In the illustrative embodiment, five sets of the four layer subassemblies **70** are inserted within the frame assembly **14**. More particularly, the first subassembly **70***a* is placed against the interface of the strike plate **20**, followed by the second, third, and fourth subassemblies **70***b*, **70***c*, and **70***d*. In a further illustrative embodiment, the five subassemblies **70** may be placed within the press **78** to form the outer energy absorbing assembly **34** prior to placement within the outer frame assembly **14**.

At step **110**, polyurethane is applied to the front face **52** of the ceramic panel **36**. The front face **52** of the ceramic panel **36** is then placed against the outer energy absorbing assembly **34** at step **112**. Next, polyurethane is applied to the front face **56** of the backing plate **38** at step **114**. At step **116**, the front face **56** of the backing plate **38** is then placed against the rear face **54** of the ceramic panel **36**. Next, the inner energy absorbing assembly **40** is formed in a manner similar to that detailed above with respect to the outer energy absorbing assembly **34**. More particularly, polyurethane is applied to each of the plurality of aramid fiber layers **72** at step **118**. The polyurethane impregnated layers **64** are then pressed together, illustratively with the press **78**, to form a subassembly **76** at step **120**. In the illustrative embodiment, a single subassembly **70** defines the inner energy absorbing assembly **40**.

At step **122**, the inner energy absorbing assembly **40** is placed within the frame assembly **14** against the rear face **58** of the backing plate **38**. Potting compound **65**, illustratively polyurethane, is then poured over the rear face of the inner energy absorbing assembly **40** at step **124**. The polyurethane **65** fills in voids and/or gaps within the outer frame assembly **14** between the core **32** and the outer strike plate **20** and side walls **26**. As such, the polyurethane secures or fixes the core **32** within the outer frame assembly **14**.

With reference now to FIGS. **2** and **4**, the ballistic resistant apparatus **10**, **10'** is configured to resist 0.50 caliber bullet penetration. More particularly, the ballistic resistant apparatus **10**, **10'** is configured to defeat an attack threat from a 0.50 caliber M2 armor-piercing bullet **80**, typically traveling around 2800 feet per second. The outer energy absorbing assembly **34** absorbs initial projectile impact energy thereby reducing velocity and enhancing the effectiveness of the ceramic panel **36**. In other words, the outer energy absorbing assembly **34** is configured to absorb energy from the projectile **80** as it travels from front face **46** to rear face **48**. As such, the thickness of the ceramic panel **36** may be reduced without sacrificing protection. In the illustrative embodiment, the ceramic panel **36** is configured to further absorb energy from the projectile **80**, and illustratively fracture upon sufficient impact. As noted above, the urethane impregnated polyimide layers **50** reduces or improves the fiber strength thereby reducing burst penetration of the bullet **80**. The resin layer **44** between the rear face of the ceramic panel **36** and the backing plate **38** acts as an energy dampener or shock absorber, the resin layer **44** cooperates with the backing plate **38** restrains or limits movement of the ceramic panel **36** in response to impact from projectile **80**. The inner energy absorbing assembly **40** further anticipates energy transfer and absorbs energy transferred by the ceramic panel **36**.

The illustrative ballistic resistant apparatus **10** of FIGS. **2** and **3** has been shown effective in stopping penetration of a 0.50 caliber armor-piercing bullet **80** traveling up to around 2900 feet per second. The further illustrative embodiment ballistic resistant apparatus **10'** of FIGS. **4** and **5** has been shown to be effective in withstanding multiple 0.50 caliber bullet penetrations. More particularly, the ballistic resistant apparatus **10** has prevented penetration of three independent 0.05 caliber bullet impacts within an approximate 8 inch by 8 inch surface area. Furthermore, the ballistic resistant apparatus **10'** has been shown to prevent penetration of light armored penetrator (SLAP) rounds traveling typically between 3800-4000 feet per second.

While this invention has been described as having an exemplary design, the present invention may be further modified within the spirit and scope of this disclosure. This application is therefore intended to cover any variations, uses, or adaptations of the invention using its general principles. Further, this application is intended to cover such departures from the present disclosure as come within known or customary practice in the art to which this invention pertains.

The invention claimed is:

1. A ballistic resistant apparatus comprising:

an outer energy absorbing assembly including a front face, a rear face and a plurality of layers, each of the layers including a plurality of interconnected fibers, the outer energy absorbing assembly being configured to absorb energy from a projectile traveling from said front face toward said rear face;

a barrier including a front face and a rear face, the front face of the barrier being positioned behind the rear face of the outer energy absorbing assembly and configured to further absorb energy from the projectile;

a movement restraint including a front face and a rear face, the front face of the restraint being positioned behind the rear face of the barrier and configured to limit movement thereof in response to impact from the projectile; and

a dampener positioned intermediate the barrier and the restraint, the dampener configured to cooperate with the restraint to dampen energy from the projectile as transferred from the barrier.

2. The apparatus of claim **1**, further comprising an inner energy absorbing assembly including a front face and a rear face, the front face of the inner energy absorbing assembly positioned behind the rear face of the restraint, the inner energy absorbing assembly including a plurality of layers, each of the layers including a plurality of interconnected fibers, the inner energy absorbing assembly being configured to absorb energy from the projectile as transferred through the barrier.

3. The apparatus of claim **2**, wherein each of the layers of the inner energy absorbing assembly includes a plurality of interconnected aramid fibers impregnated with a resin.

4. The apparatus of claim **1**, further comprising an outer strike plate including a front face and a rear face, the outer energy absorbing assembly being positioned behind the rear face of the outer strike plate.

5. The apparatus of claim **4**, further comprising a plurality of sidewalls extending inwardly from the outer strike plate around the periphery of the outer energy absorbing assembly, the barrier, the restraint, and the dampener.

6. The apparatus of claim **5**, further comprising a potting compound securing the outer energy absorbing assembly, the barrier, the restraint, and the dampener within the plurality of sidewalls.

7. The apparatus of claim **1**, wherein the restraint is formed of metal.

8. The apparatus of claim **1**, wherein each of the layers of the outer energy absorbing assembly includes a plurality of interconnected aramid fibers impregnated with a resin.

9. The apparatus of claim 1, wherein the barrier comprises a ceramic panel configured to fracture when absorbing sufficient energy.

10. The apparatus of claim 1, wherein the restraint comprises a backing plate.

11. The apparatus of claim 1, wherein the dampener comprises a resin layer.

12. A ballistic resistant apparatus comprising:

a composite structure including a front side and a rear side positioned in spaced relation to the front side;

the composite structure further including:

a substantially planar outer energy absorbing assembly positioned proximate the front side and including an outer layer and an inner layer, each of the outer layer and the inner layer including a plurality of interconnected aramid fibers impregnated with a resin;

a substantially planar backing plate positioned proximate the rear side, the backing plate formed of metal; and

a substantially planar ceramic panel positioned intermediate the inner layer of the substantially planar outer energy absorbing assembly and the backing plate.

13. The apparatus of claim 12, wherein the distance from the front side to the rear side is less than about 3 inches.

14. The apparatus of claim 12, further including an areal density of less than about 22 pounds per square foot.

15. The apparatus of claim 12, wherein the composite structure further includes an inner energy absorbing assembly including a front face and a rear face, the front face of the inner energy absorbing assembly positioned adjacent the backing plate, the inner energy absorbing assembly including a plurality of layers, each of the layers including a plurality of interconnected aramid fibers impregnated with a resin.

16. The apparatus of claim 12, further comprising an outer strike plate positioned adjacent to the front side of the composite structure.

17. The apparatus of claim 16, further comprising a plurality of sidewalls extending inwardly from the outer strike plate around the periphery of the outer energy absorbing assembly, the ceramic panel, and the backing plate.

18. The apparatus of claim 17, further comprising a potting compound securing the outer energy absorbing assembly, the ceramic panel, and the backing plate within the plurality of sidewalls.

19. The apparatus of claim 12, further comprising a resin layer positioned intermediate the ceramic panel and the backing plate, the resin layer configure to dampen energy transferred by the ceramic panel.

20. A ballistic resistant composite structure comprising:

an outer energy absorbing assembly including an outer layer, an inner layer, and at least thirteen intermediate layers positioned intermediate the outer layer and the inner layer, each of the layers including a plurality of interconnected aramid fibers impregnated with a resin and having a thickness of at least 0.025 inches;

a ceramic panel including a front face and a rear face, the front face of the ceramic panel being positioned behind the inner layer of the outer energy absorbing assembly, the ceramic panel having a thickness between the front face and the rear face of at least one inch;

a backing plate including a front face and a rear face, the front face of the backing plate being positioned behind the rear face of the ceramic panel, the backing plate formed of metal and having a thickness between the front face and the rear face of at least 0.125 inches; and

a resin layer positioned intermediate the ceramic panel and the backing plate.

21. The structure of claim 20, further comprising an inner energy absorbing assembly including a front face and a rear face, the front face of the inner energy absorbing assembly positioned behind the rear face of the backing plate, the inner energy absorbing assembly including an inner layer, an outer layer, and at least two layers intermediate layers positioned intermediate the inner layer and the outer layer, each of the layers including a plurality of interconnected aramid fibers impregnated with a resin and having a thickness of at least 0.025 inches.

22. The structure of claim 21, wherein the distance from a front side of the outer layer of the outer energy absorbing assembly to a rear side of the inner layer of the inner energy absorbing assembly is less than about 3 inches.

23. The structure of claim 22, further including an areal density of less than about 22 pounds per square foot.

24. The structure of claim 20, further comprising an outer strike plate positioned adjacent to the outer layer of the outer energy absorbing assembly, the outer strike plate formed of metal and having a thickness of at least 0.0625 inches.

25. A method of manufacturing a ballistic resistant composite structure, the method comprising the steps of:

providing a first layer of interconnected fibers;

coating the first layer with a resin;

providing a second layer of interconnected fibers;

coating the second layer with a resin;

pressing together the first layer, and the second layer to form an energy absorbing assembly;

providing a barrier having a front face and a rear face;

placing the front face of the barrier adjacent the energy absorbing assembly;

coating the rear face of the barrier with a resin;

providing a backing plate having a front face and a rear face; and

pressing the front face of the backing plate against the resin on the rear face of the barrier.

26. The method of claim 25, further comprising the steps of:

coating the front face of the barrier with a resin; and

pressing the resin coated front face of the barrier against the energy absorbing assembly.

27. The method of claim 25, further comprising the steps of:

providing a frame assembly including an outer strike plate and a plurality of sidewalls;

inserting the energy absorbing assembly, the barrier, and the backing plate into the frame assembly; and

potting with a resin the energy absorbing assembly, the barrier, and the backing plate within the frame assembly.

28. The method of claim 27, further comprising the step of coupling the frame assembly to a vehicle.

29. The method of claim 25, wherein the barrier comprises a ceramic panel.

* * * * *