US008146283B2

(12) **United States Patent**
Genes et al.

(10) **Patent No.: US 8,146,283 B2**
(45) **Date of Patent: Apr. 3, 2012**

(54) **WEAPON MOUNTED ADAPTER**

(75) Inventors: **Mark A. Genes**, South Mills, NC (US); **Brandon R. Clarke**, Bloomington, IN (US); **Christopher Austin**, Shirley, IN (US); **Michael Holzmeyer**, Bloomfield, IN (US); **Daniel V. Jones**, Mitchell, IN (US); **Jeremy M. Knepp**, Montgomery, IN (US); **Lucius A. Taylor**, French Lick, IN (US); **Barry Gatewood**, Bloomfield, IN (US)

(73) Assignee: **The United States of America as represented by the Secretary of the Navy**, Washington, DC (US)

(*) Notice: Subject to any disclaimer, the term of this patent is extended or adjusted under 35 U.S.C. 154(b) by 143 days.

(21) Appl. No.: **12/651,198**

(22) Filed: **Dec. 31, 2009**

(65) **Prior Publication Data**

US 2011/0100203 A1 May 5, 2011

Related U.S. Application Data

(60) Provisional application No. 61/256,943, filed on Oct. 30, 2009.

(51) **Int. Cl.**
F41C 27/00 (2006.01)

(52) **U.S. Cl.** **42/90**; 42/124

(58) **Field of Classification Search** 42/90, 111, 42/124–128, 71.01, 72, 106, 96, 75.01, 75.02; 89/9, 36.06

See application file for complete search history.

(56) **References Cited**

U.S. PATENT DOCUMENTS

5,590,484	A	1/1997	Mooney et al.	
6,134,823	A	10/2000	Griffin	
6,490,822	B1 *	12/2002	Swan	42/71.01
6,499,245	B1 *	12/2002	Swan	42/71.01
6,508,027	B1	1/2003	Kim	
6,618,976	B1 *	9/2003	Swan	42/114
6,655,069	B2	12/2003	Kim	
6,694,660	B1 *	2/2004	Davies	42/75.01
6,779,288	B1	8/2004	Kim	
6,782,652	B1	8/2004	Erickson	
6,851,214	B2	2/2005	Oz	
6,854,206	B2 *	2/2005	Oz	42/124
6,895,708	B2	5/2005	Kim et al.	
7,117,624	B2	10/2006	Kim	
RE39,465	E *	1/2007	Swan	42/71.01
7,216,451	B1 *	5/2007	Troy	42/72
7,310,903	B2	12/2007	Kim	
7,325,352	B2	2/2008	Matthews et al.	
RE40,216	E *	4/2008	Swan	42/71.01
7,360,333	B2	4/2008	Kim	
7,363,741	B2 *	4/2008	DeSomma et al.	42/85
7,458,179	B2 *	12/2008	Swan	42/72

(Continued)

OTHER PUBLICATIONS

Dillon Aero, Inc.—M134D Minigun Product Information Guide, 2006, 40 pgs.

(Continued)

Primary Examiner — Michael Carone
Assistant Examiner — Jonathan C Weber
(74) *Attorney, Agent, or Firm* — Christopher A. Monsey

(57) **ABSTRACT**

An adapter for mounting on a weapon. The adapter illustratively includes a plurality of mounting rails for removably coupling with a variety of accessories, such as sights, illumination devices, and laser aiming devices.

16 Claims, 14 Drawing Sheets

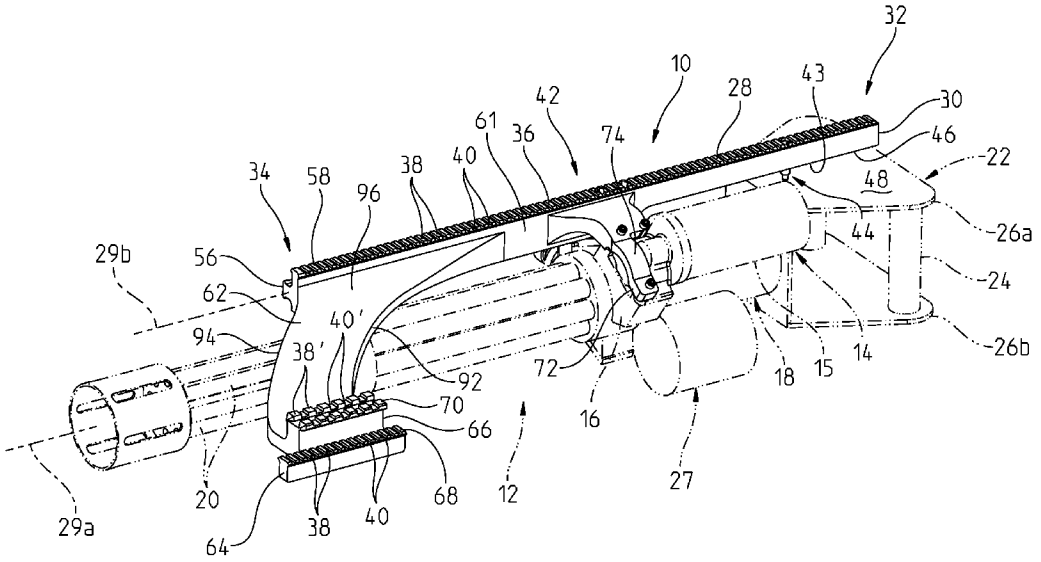

U.S. PATENT DOCUMENTS

7,493,720	B1	2/2009	Householder	
7,562,484	B2	7/2009	Kim	
7,591,098	B2	9/2009	Matthews et al.	
7,669,359	B2 *	3/2010	Kim	42/124
7,707,762	B1 *	5/2010	Swan	42/85
7,765,730	B2 *	8/2010	Keng	42/111
7,793,452	B1 *	9/2010	Samson et al.	42/72
2004/0000083	A1 *	1/2004	Grant, Jr.	42/112
2005/0000142	A1 *	1/2005	Kim et al.	42/124
2005/0011104	A1 *	1/2005	Oz	42/124
2005/0241211	A1 *	11/2005	Swan	42/124
2006/0010748	A1 *	1/2006	Stoner et al.	42/71.01
2006/0288626	A1	12/2006	Kim	
2007/0006509	A1 *	1/2007	DeSomma et al.	42/72
2008/0092423	A1 *	4/2008	Keng	42/111
2008/0134559	A1	6/2008	Swan	
2008/0164392	A1	7/2008	Holmberg	
2008/0168696	A1	7/2008	Orne et al.	
2009/0101776	A1	4/2009	Peterson et al.	
2010/0095575	A1 *	4/2010	Swan	42/72
2010/0154276	A1 *	6/2010	Kim	42/90
2010/0154280	A1 *	6/2010	LaFrance et al.	42/124
2010/0186278	A1 *	7/2010	Daniel	42/71.01
2010/0319231	A1 *	12/2010	Stone et al.	42/71.01
2011/0061281	A1 *	3/2011	Kapusta et al.	42/71.01

OTHER PUBLICATIONS

Military Standard, MIL-STD-1913 (AR), Dimensioning of Accessory Mounting Fail for Small Arms Weapons, Feb. 3, 1995, 10 pgs.

Surefire—HellFighter™ User Manual for M2HB .50 Cal Machine Gun, Jul. 1, 2008, 2 pgs., Fountain Valley, CA.

* cited by examiner

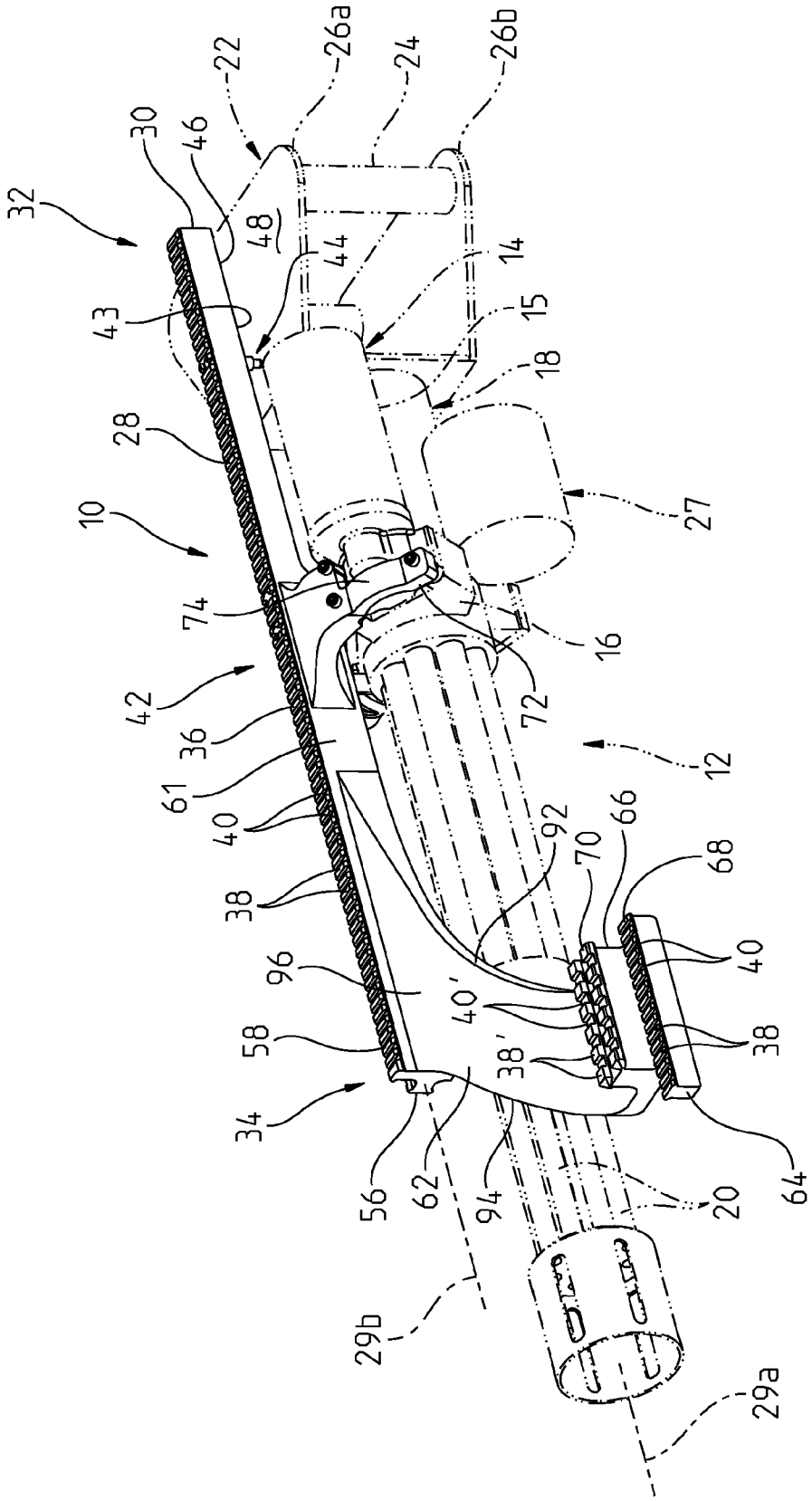
32
30
46
22
26a
24
26b
48
44
14
43
15
18
28
10
27
74
16
42
72
36
12
61
40
92
70
66
68
38
96
40'
40
58
38'
38
34
56
62
94
20
64
29b
29a

FIG. 1

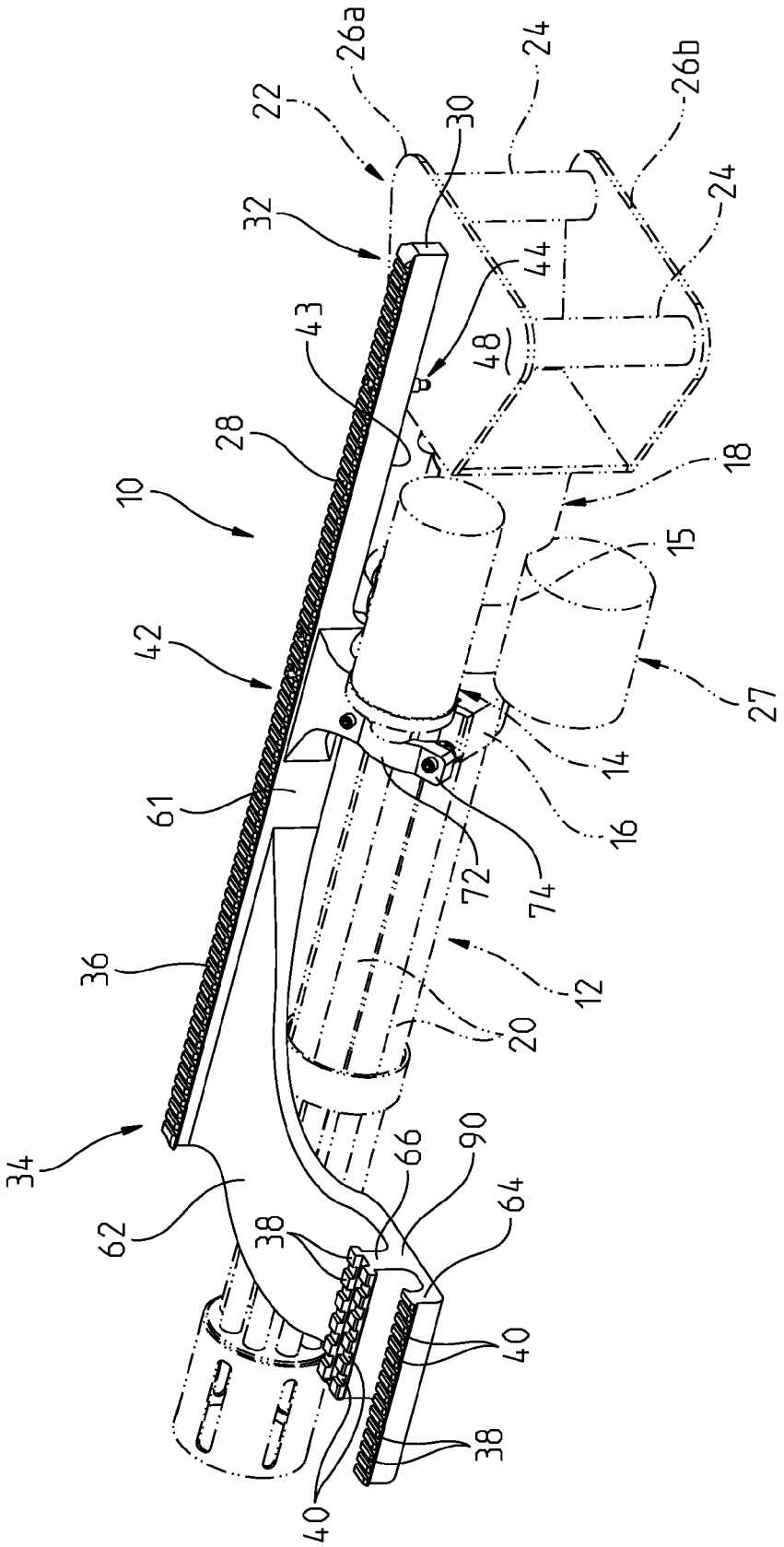
10
12
14
15
16
18
20
22
24
24
26a
26b
27
28
30
32
34
36
38
38
40
40
42
43
44
48
61
62
64
66
72
74
90

FIG. 2

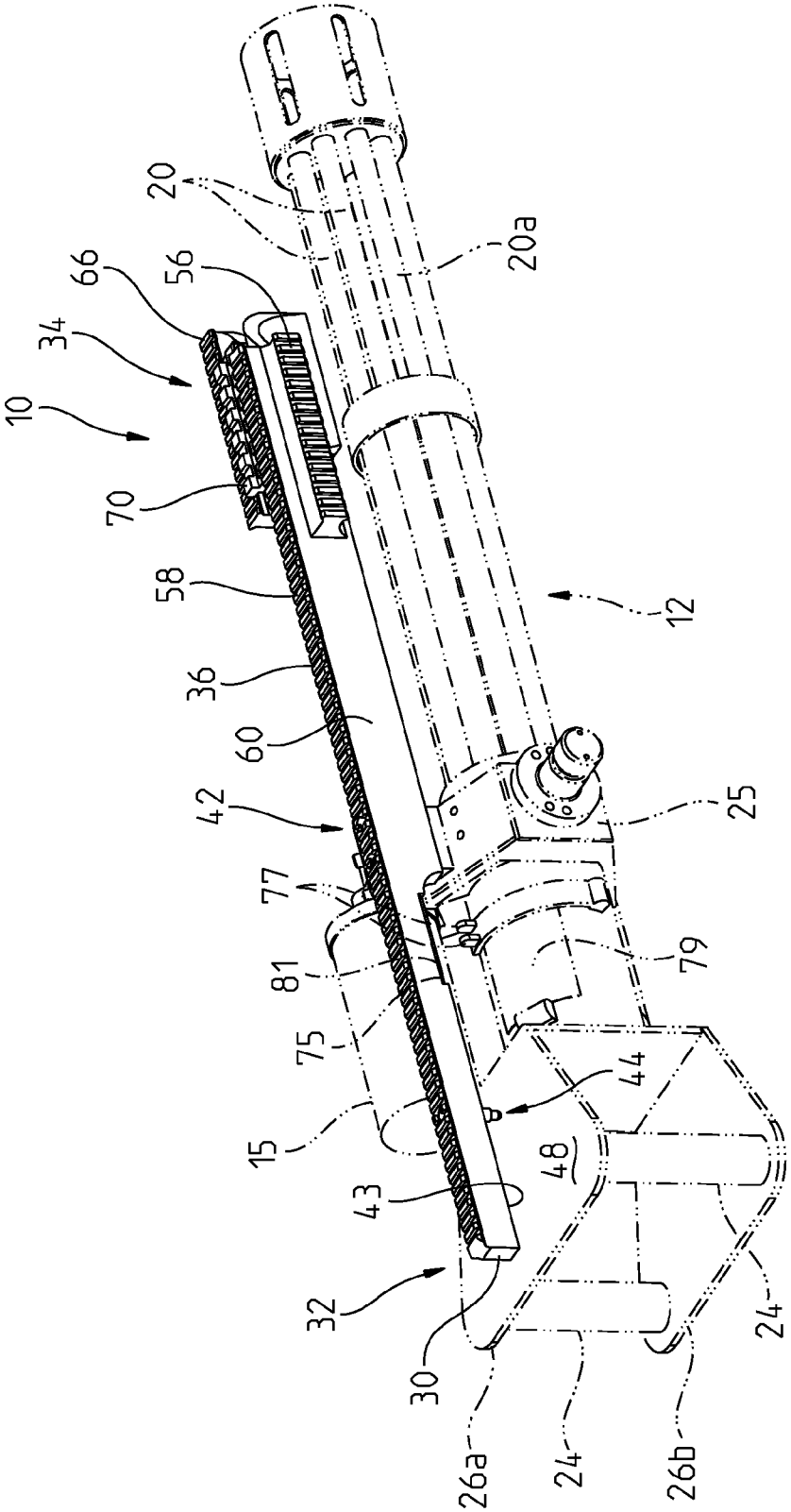
10
34
66
56
20
20a
70
58
36
60
42
77
81
75
15
43
32
30
26a
24
26b
24
48
44
79
25
12

FIG. 3

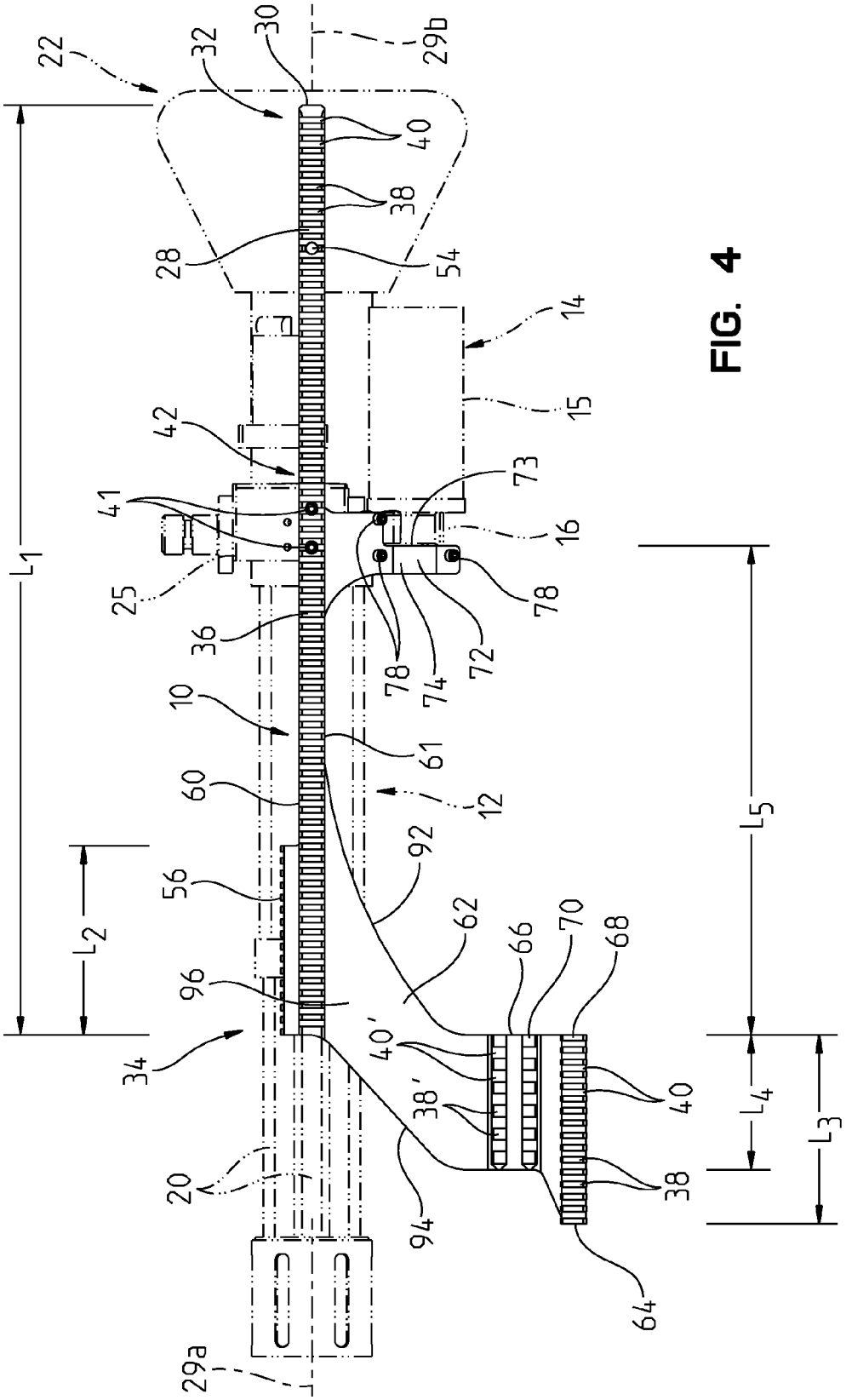
22
32
30
29b
40
38
28
54
14
15
42
41
73
16
25
36
78
74
72
10
61
60
12
92
56
62
66
70
68
96
40'
38'
34
20
94
64
29a
L1
L2
L3
L4
L5

FIG. 4

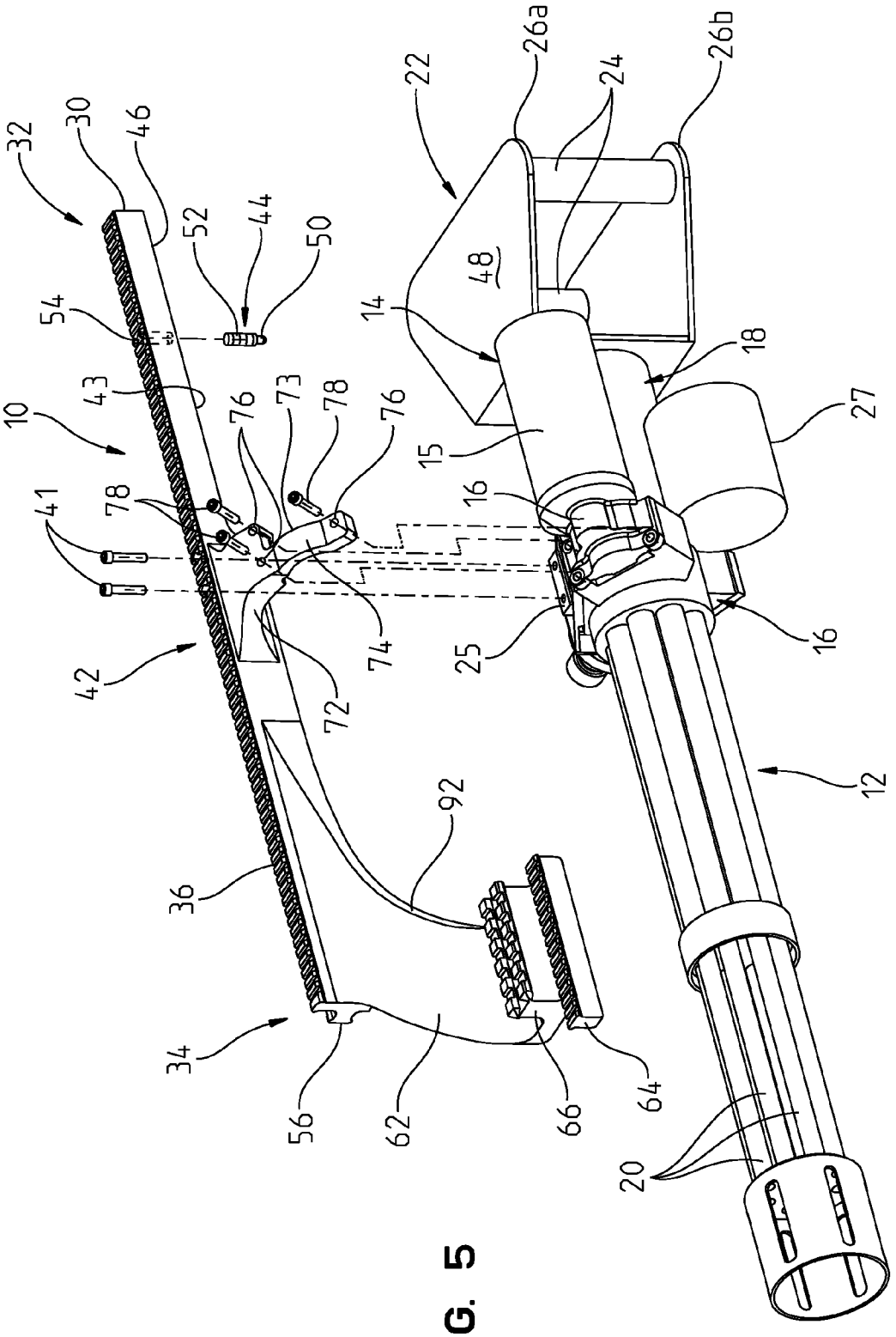
10
12
14
15
16
16
18
20
22
24
25
26a
26b
27
30
32
34
36
41
42
43
44
46
48
50
52
54
56
62
64
66
72
73
74
76
76
78
78
92

FIG. 5

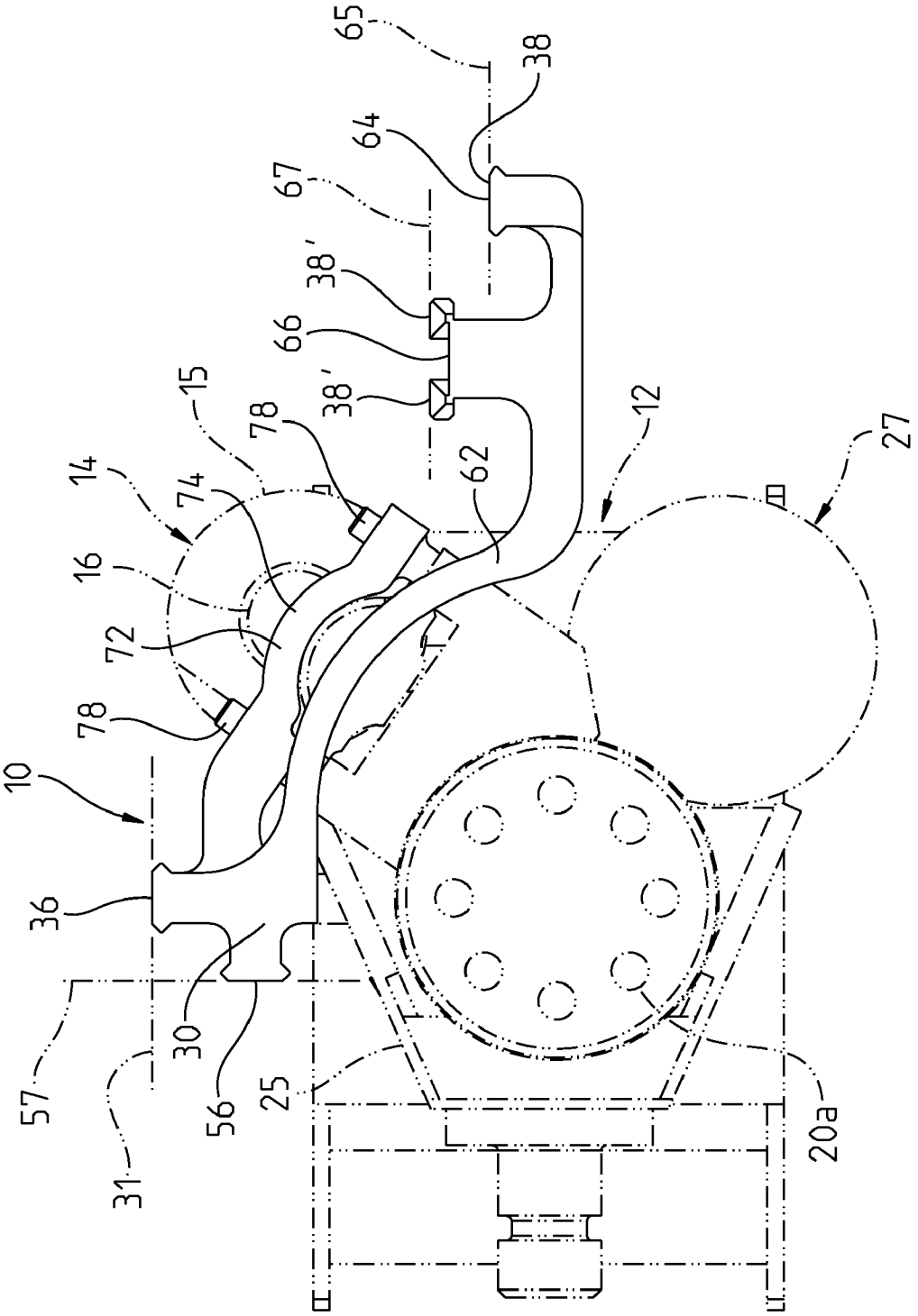
65
38
64
67
38'
66
38'
15
78
14
74
16
72
78
10
36
30
57
31
56
25
62
12
27
20a

FIG. 6

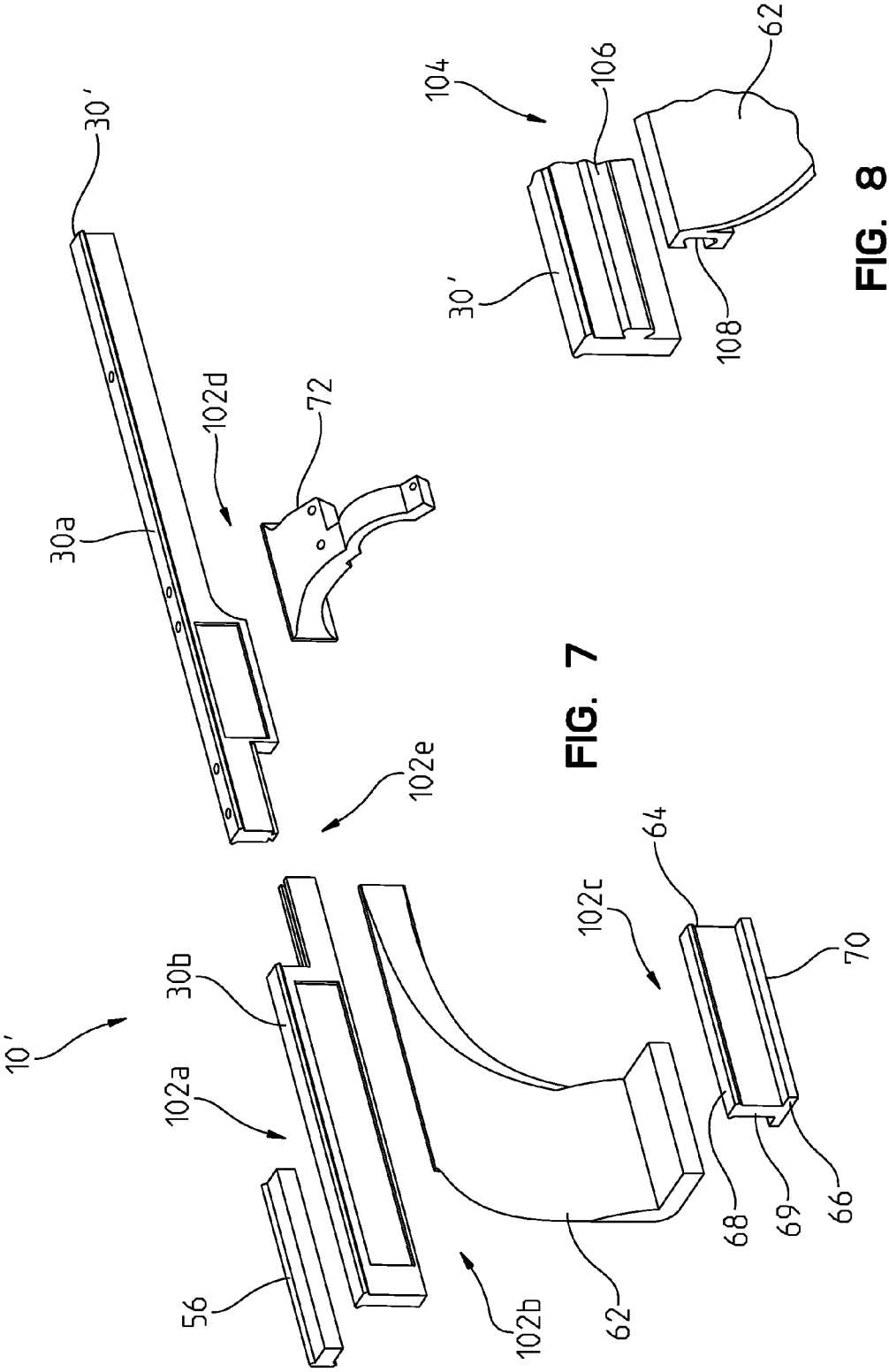
10'
30'
30a
102d
72
102e
30b
102a
56
102b
62
102c
64
70
68
69
66
104
106
62
30'
108

FIG. 7

FIG. 8

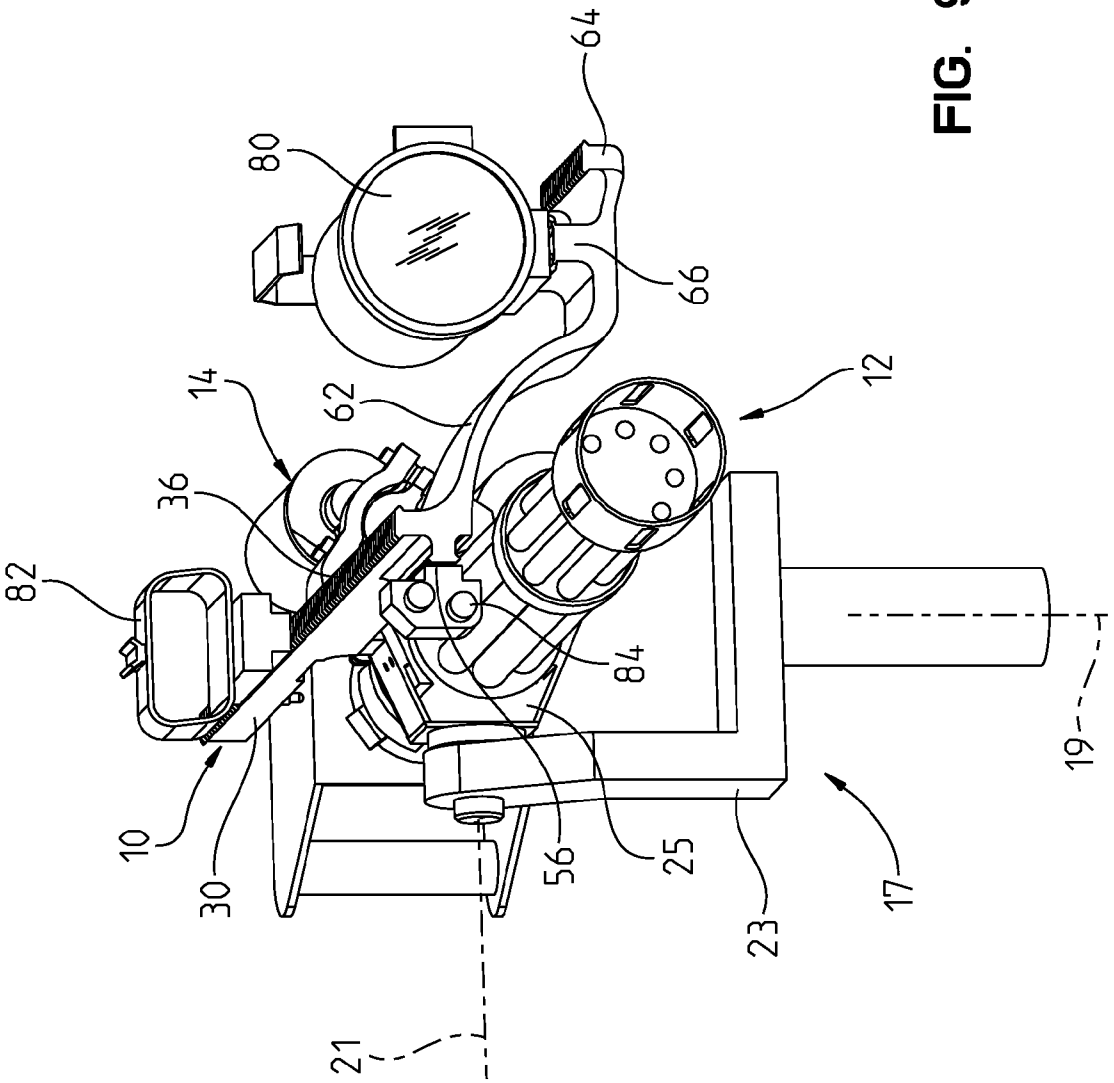

FIG. 9

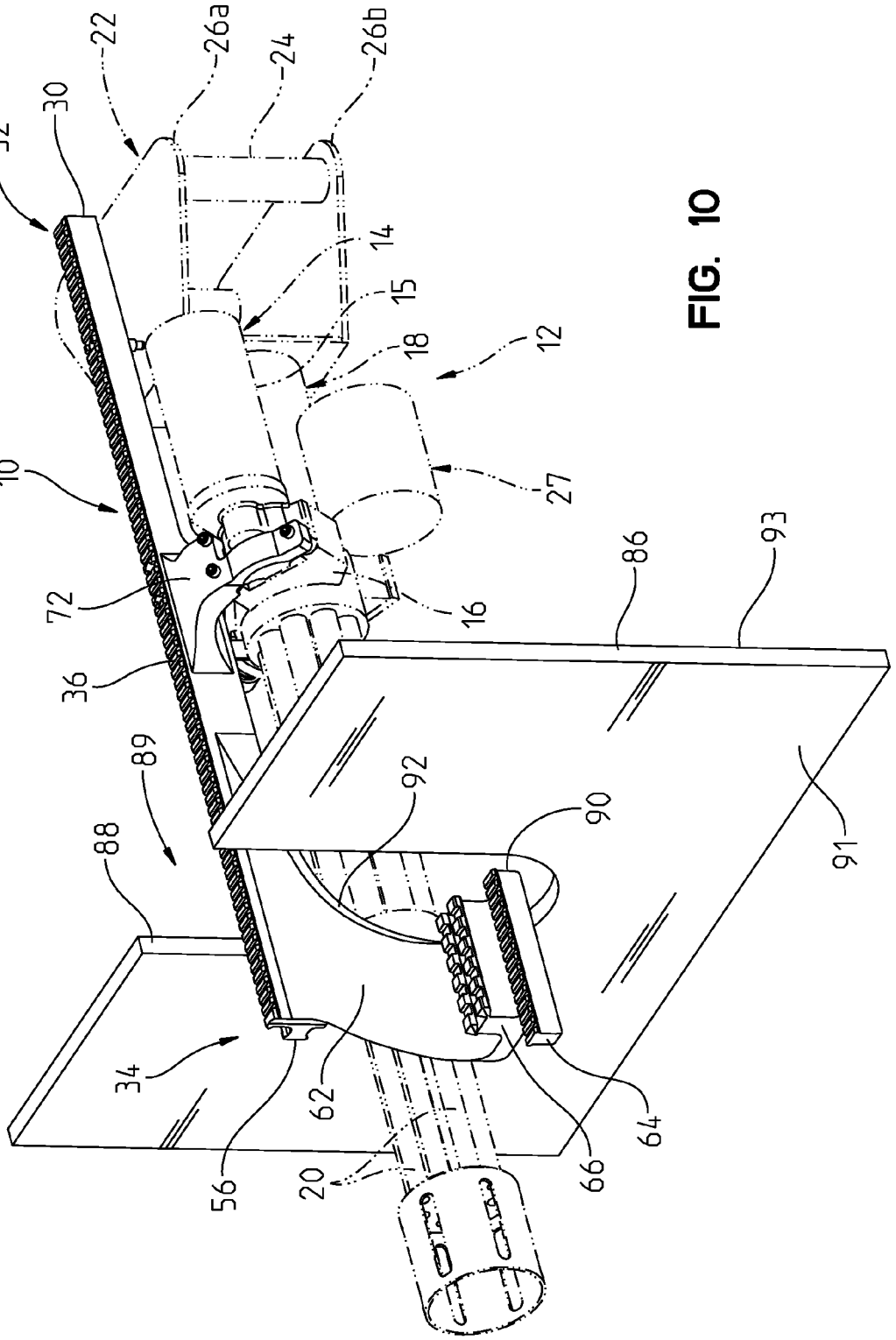
32
30
22
26a
24
26b
14
15
18
12
10
27
72
16
86
93
36
89
92
90
88
91
34
62
64
56
20
66

FIG. 10

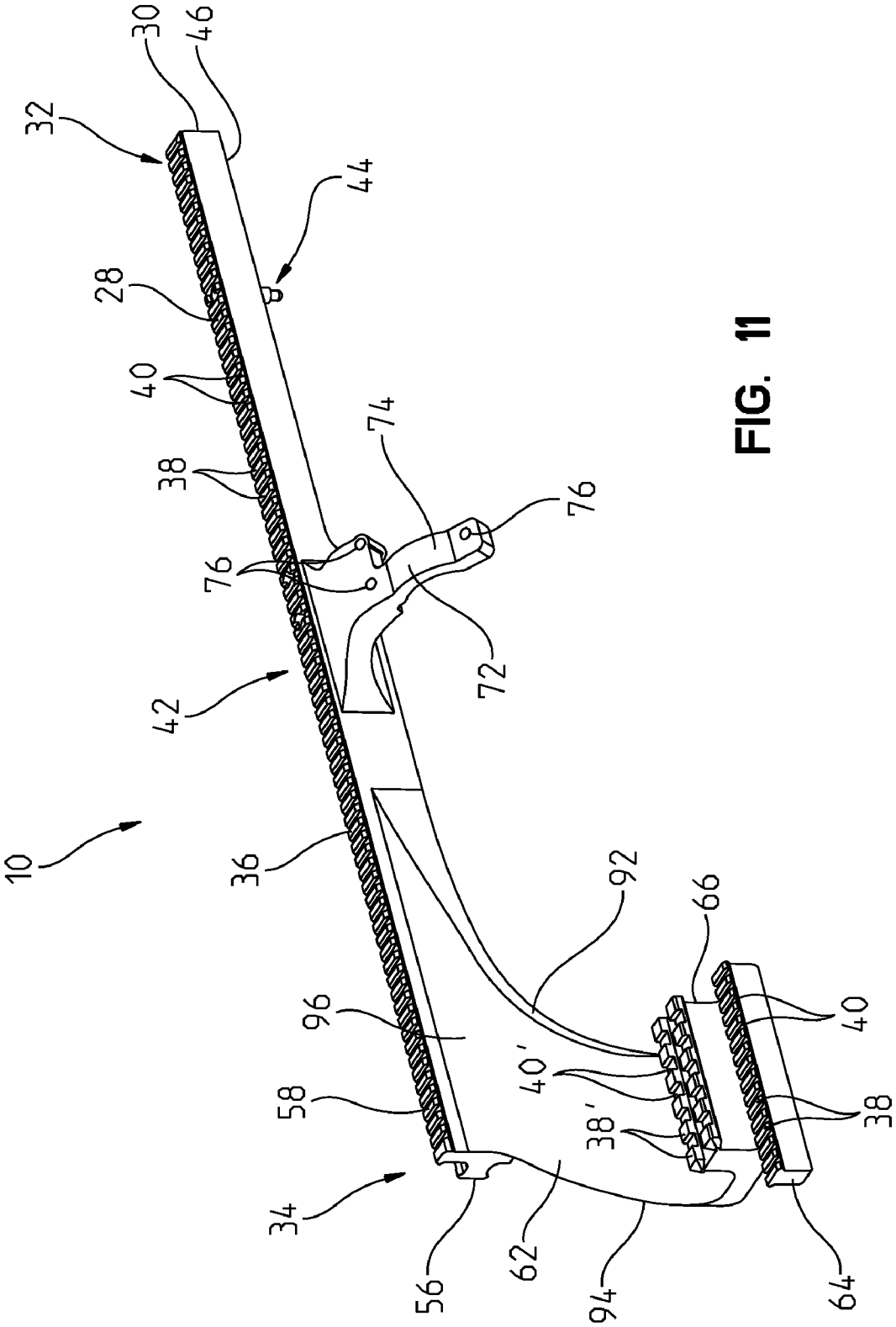
10
32
30
46
44
28
40
38
74
76
76
72
42
36
92
66
96
40'
40
58
38'
38
34
56
62
94
64

FIG. 11

FIG. 12

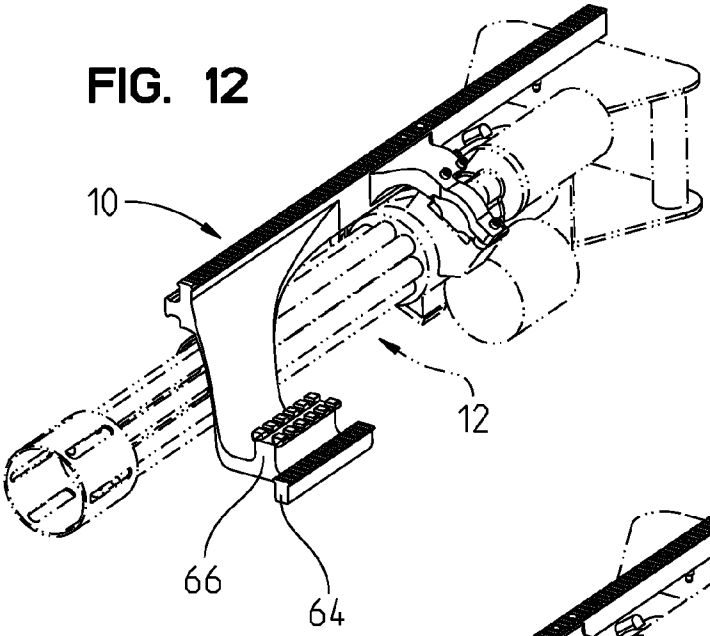

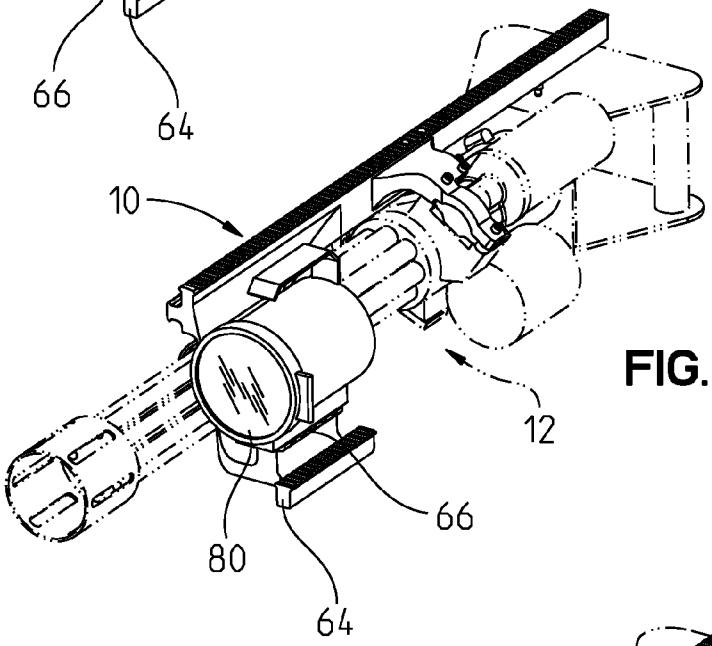

FIG. 13

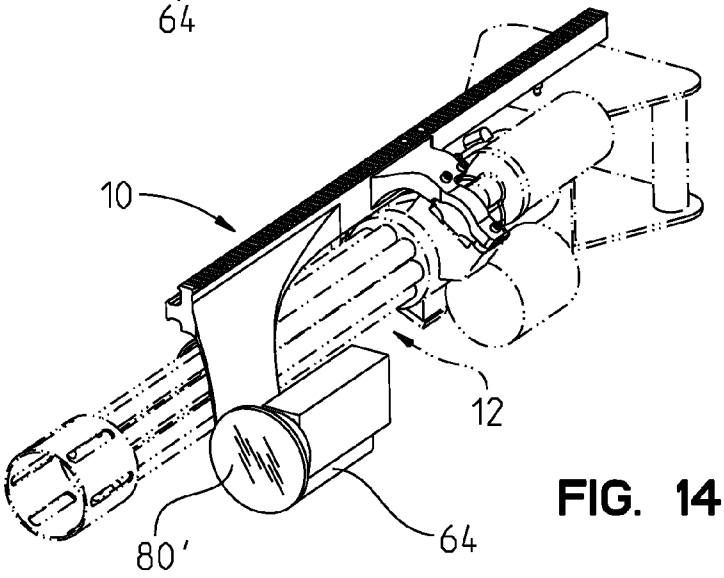

FIG. 14

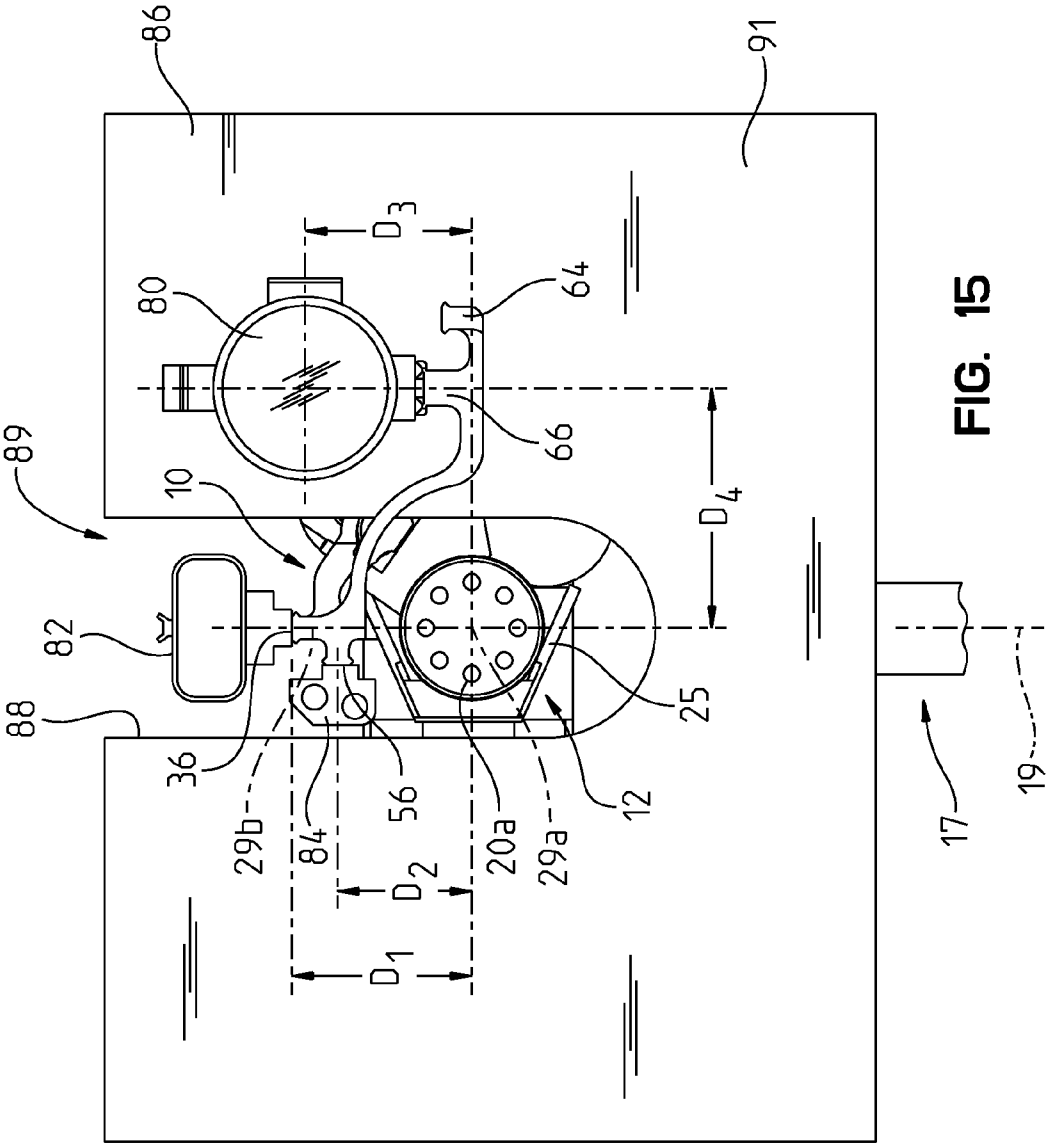

FIG. 15

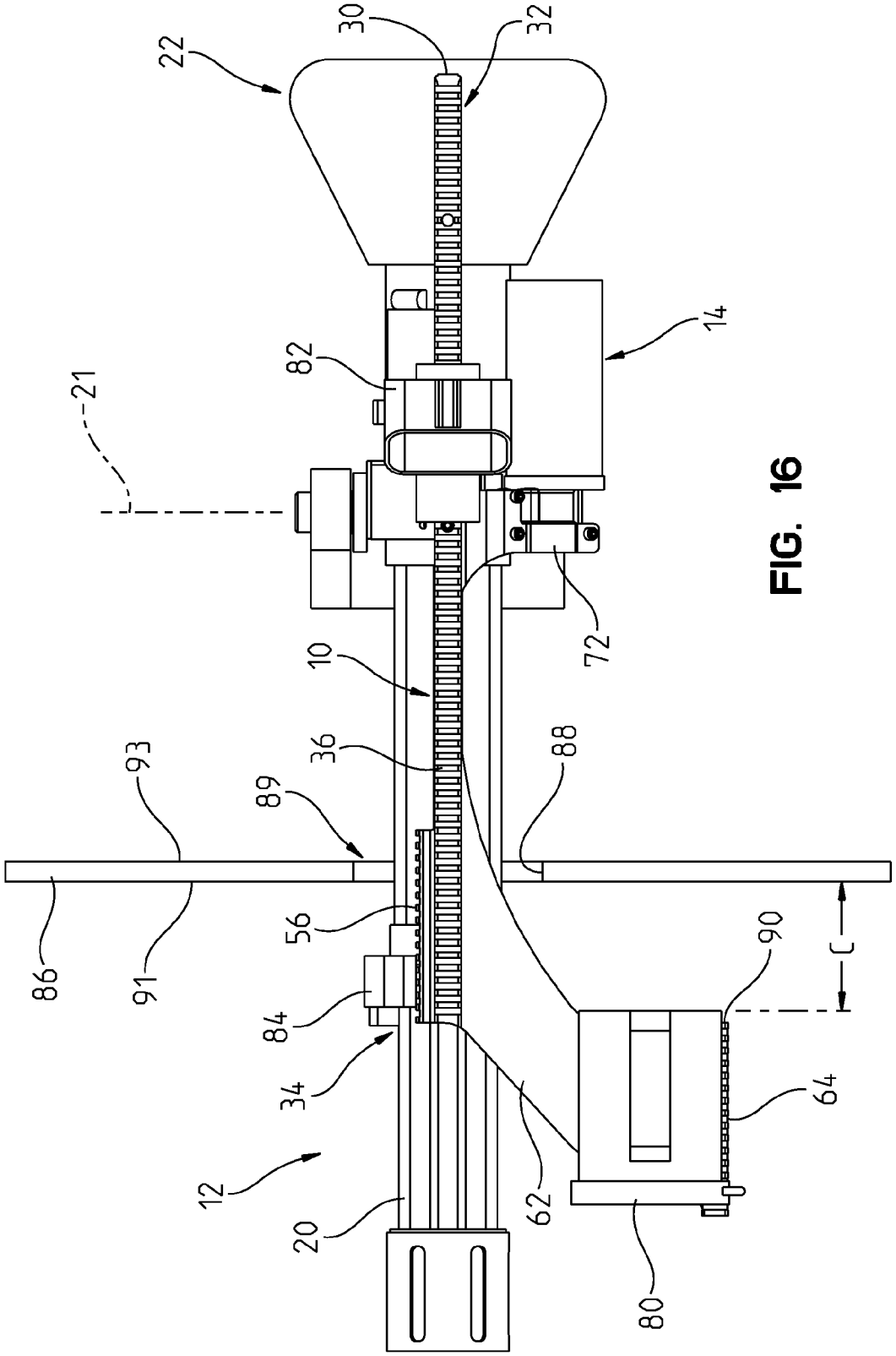

FIG. 16

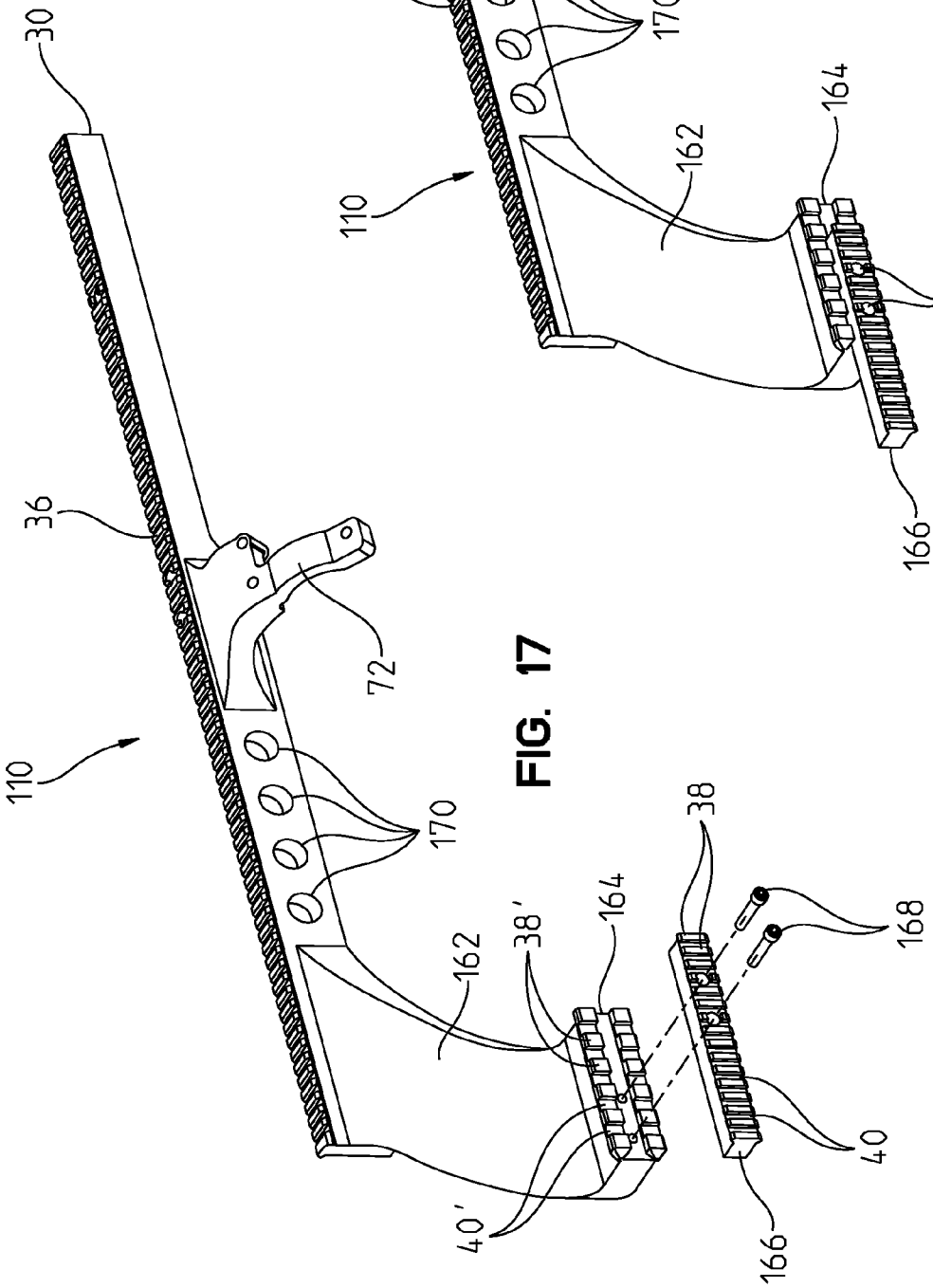

FIG. 17

FIG. 18

WEAPON MOUNTED ADAPTER

CROSS-REFERENCE TO RELATED APPLICATION

This application claims priority to U.S. Provisional Patent Application Ser. No. 61/256,943, filed Oct. 30, 2009, the disclosure of which is expressly incorporated by reference herein.

STATEMENT REGARDING FEDERALLY SPONSORED RESEARCH OR DEVELOPMENT

The invention described herein includes contributions by one or more employees of the Department of the Navy made in performance of official duties and may be manufactured, used and licensed by or for the United States Government for any governmental purpose without payment of any royalties thereon.

BACKGROUND AND SUMMARY OF THE DISCLOSURE

The present invention relates generally to firearms and, more particularly, to a weapon mounted adapter system for mounting accessories to the firearm.

The increasing demands and complexity of strategic missions has resulted in a need for weapons with a number of accessories, such as optical sights, flashlights, range finders, laser designators, and night vision scopes. As a result, various mounts for weapons have been developed to facilitate the mounting of accessories proximate to the weapon barrels.

The present disclosure relates to a weapon mounted platform for the simultaneous and concurrent attachment and use of various accessories, such as sights, illumination devices, and optical devices, in connection with fire control of a weapon, such as an MK 44 Minigun, for enhancing initial round accuracy. The platform is further configured to reduce and/or eliminate splash-back of illumination devices and passive aiming lasers when used in conjunction with protective shields.

According to an illustrative embodiment of the present disclosure, an adapter for mounting on a weapon includes a support having a center portion intermediate opposing proximal and distal ends. A longitudinally extending first inboard mounting rail extends between the proximal and distal ends of the support. A longitudinally extending second inboard mounting rail is positioned proximate the distal end of the support, extends parallel to, and is angularly offset from the first inboard mounting rail. A tail extends laterally outwardly from the distal end of the support. A first outboard mounting rail is supported by the tail. A stabilizing member illustratively extends laterally outwardly from the support and is positioned intermediate the proximal and distal ends thereof. The support illustratively includes an arcuate arm configured to conform to a circumference of the weapon, and to be secured to the weapon. Accessories may be removably coupled to the mounting rails.

According to a further illustrative embodiment of the present disclosure, a method of supporting accessories on a weapon includes the steps of attaching an adapter to the weapon, the adapter including a longitudinally extending beam and a laterally extending tail, and coupling a first accessory to a first mounting rail supported by the beam proximate a proximal end of the beam. The method further includes the step of coupling a second accessory to a second mounting rail supported by the tail and spaced laterally from the beam proximate a distal end of the beam.

Additional features and advantages of the present invention will become apparent to those skilled in the art upon consideration of the following detailed description of the illustrative embodiment exemplifying the best mode of carrying out the invention as presently perceived.

BRIEF DESCRIPTION OF THE DRAWINGS

The foregoing aspects and many of the attendant advantages of this invention will become more readily appreciated as the same become better understood by reference to the following detailed description when taken in conjunction with the accompanying drawings.

FIG. **1** is a right front perspective view of an illustrative adapter showing the weapon in phantom;

FIG. **2** is a right rear perspective view similar to FIG. **1**;

FIG. **3** is a left rear perspective view of the adapter of FIG. **1**, with the weapon shown in phantom;

FIG. **4** is a top plan view of the adapter and weapon of FIG. **1**;

FIG. **5** is a partially exploded perspective view of the adapter and weapon of FIG. **1**;

FIG. **6** is a front end view of the adapter and weapon of FIG. **1**;

FIG. **7** is an exploded perspective view of an illustrative modular adapter;

FIG. **8** is a detail perspective view of an illustrative coupling of the adapter of FIG. **7**;

FIG. **9** is a front perspective view of the adapter of FIG. **1** coupled to a weapon supported by a mount;

FIG. **10** is a perspective view similar to FIG. **1**, showing the adapter and weapon extending through a protective shield;

FIG. **11** is a front right perspective view of the adapter similar to FIG. **1**;

FIGS. **12-14** are perspective views of illustrative accessory mounting options in connection with the adapter of FIG. **1**;

FIG. **15** a front view of the adapter, weapon, and mount of FIG. **9**, with a protective shield supported intermediate opposing ends of the weapon;

FIG. **16** is a top plan view of FIG. **15**;

FIG. **17** is a perspective view similar to FIG. **11**, showing a further illustrative adapter; and

FIG. **18** is a detailed perspective view of the distal end of the adapter of FIG. **17**.

Corresponding reference characters indicate corresponding parts throughout the several views. Although the drawings represent embodiments of various features and components according to the present disclosure, the drawings are not necessarily to scale and certain features may be exaggerated in order to better illustrate and explain the present disclosure. The exemplification set out herein illustrates embodiments of the invention, and such exemplifications are not to be construed as limiting the scope of the invention in any manner.

DETAILED DESCRIPTION OF THE DRAWINGS

For the purposes of promoting an understanding of the principles of the invention, reference will now be made to the embodiments illustrated in the drawings, which are described below. The embodiments disclosed below are not intended to be exhaustive or limit the invention to the precise form disclosed in the following detailed description. Rather, the embodiments are chosen and described so that others skilled in the art may utilize their teachings. It will be understood that no limitation of the scope of the invention is thereby intended.

The invention includes any alterations and further modifications in the illustrated devices and described methods and further applications of the principles of the invention which would normally occur to one skilled in the art to which the invention relates.

Referring initially to FIGS. **1-6**, an illustrative adapter **10** is shown mounted to a weapon **12**. Illustratively, the weapon **12** comprises a machine gun, such as an MK 44 Minigun, although other weapons may be substituted therefor. Variations of the MK 44 Minigun are also known, such as the GAU 17 or M134D Gatling Gun available from Dillon Aero, Inc. of Scottsdale, Ariz.

As known, the weapon **12** illustratively includes a drive assembly **14** including a motor **15** operably coupled to a gear head **16**. The gear head **16** is configured to drive a rotor assembly **18** in rotation. The rotor assembly **18** is operably coupled to a plurality of barrels **20** which rotate during firing to discharge rounds in a rapid succession (typically 3,000 rounds per minute). More particularly, the barrels **20** rotate as the weapon **12** is fired, such that a single barrel **20***a* is active and discharging rounds. A spade grip **22** is supported by the drive assembly **14** and includes a pair of handles **24** to be gripped by a gunner and extending between upper and lower support plates **26***a* and **26***b*. A feeder/delinker **27** may be provided to delink and feed belted ammunition to the weapon **12**.

In the illustrative embodiment of FIG. **9**, a gun mount **17** may support the weapon **12** for rotation about vertical and horizontal axes **19** and **21**, respectively. The gun mount **17** illustratively includes a vertical arm **23** supporting a yoke **25**. The arm **23** may be coupled to a base (not shown) for rotation about the vertical axis **19**. The yoke **25** is illustratively secured to the weapon **12** and supported by the arm **23** for rotation about the horizontal axis **21**. The gun mount **17** may be of the type available from Dillon Aero, Inc.

As used herein, "proximal" describes a direction toward the grip **22** of the weapon **12**; "distal" describes an opposite direction toward the open end or muzzle of the barrels **20**; "longitudinal" means in a direction generally along or parallel to a longitudinal axis **29***a* of the weapon **12**; "lateral" or "transverse" means in a direction generally perpendicular to the longitudinal direction; and "inboard" means a component is located relatively closer to the longitudinal axis **29***a* of the weapon **12** than an "outboard" component.

The adapter **10** includes a support **28**, illustratively a beam **30**, extending between opposing proximal and distal ends **32** and **34** along a longitudinal axis **29***b*. As shown in FIGS. **1**, **4** and **15**, the longitudinal axis **29***b* of the beam **30** extends parallel to the longitudinal axis **29***a* of the weapon **12**, and illustratively within the same vertical plane. Illustratively, the beam **30** may be formed of an aluminum which may be subsequently treated or coated. For example, the beam **30** may be a multi-planed, 7075 T651 hard coated anodized aluminum. The beam **30** has a length L_1 extending between opposing ends **32** and **34** (FIG. **4**). In the illustrative embodiment, the length L_1 is approximately 30 inches.

A longitudinally extending first inboard mounting rail **36** is supported by the beam **30** and extends within a first mounting plane **31** between the proximal and distal ends **32** and **34** thereof (i.e., approximately 30 inches in length). In the illustrative embodiment shown in FIG. **5**, the rail **36** is formed integral with the beam **30**. However, as further detailed herein, the rail **36** may be a separate component coupled to the beam **30**. The rail **36** may be of any suitable shape and size, but illustratively is a Picatinny rail. More particularly, the rail **36** illustratively includes a plurality of longitudinally spaced-apart ribs **38** separated by transverse slots **40**, such as the Picatinny rail specified in MIL-STD-1913, which is incorporated by reference herein.

The beam **30** is cantilevered above the weapon **12** in opposing directions from a center or mounting portion **42**. With reference to FIGS. **4** and **5**, a pair of fasteners, illustratively bolts **41**, secure the center portion **42** of the beam **30** to the weapon **12**. With reference to FIGS. **5** and **7**, the bolts **41** illustratively secure the center portion **42** of the beam **30** to the yoke **25** of the gun mount **17**. It should be appreciated that in other illustrative embodiments, the beam **30** may be secured to other structural features of the weapon **12**.

With reference to FIG. **5**, the proximal end **32** of the beam **30** includes a recess **43** to provide clearance for the drive assembly **14** of the weapon **12**. A bearing member **44** is supported by the lower surface **46** of the beam **30** near the proximal end **32** and is configured to bear against a top surface **48** of the upper plate **26***a*. The bearing member **44** illustratively comprises a spring plunger including a polymeric bearing pin **50** spring biased outwardly from a housing **52** to contact top surface **48** of the upper plate **26***a*. The housing **52** is illustratively threadedly received within an aperture **54** extending into the lower surface **46** of the beam **30**. As such, the bearing member **44** helps support the cantilevered proximal end **32** of the beam **30**.

A longitudinally extending second inboard mounting rail **56** is supported proximal the distal end **34** of the beam **30** is angularly offset from the first inboard mounting rail **36**. Illustratively, the second inboard mounting rail **56** is angularly offset about the longitudinal axis **29***b* by 90 degrees from the first inboard mounting rail **36**. As such, the first inboard mounting rail **36** extends upwardly from an upper surface **58** of the beam **30**, while the second inboard mounting rail **56** extends laterally outwardly from a first side surface **60** of the beam **30**. In other words, the second inboard mounting rail **56** extends within a second mounting plane **57** perpendicular to the first mounting plane **31**. In the illustrative embodiment shown in FIG. **5**, the mounting rail **56** is formed integral with the beam **30**. However, as further detailed herein, the rail **56** may be a separate component coupled to the beam **30**. The second inboard mounting rail **56** is illustratively a Picatinny rail conforming to MIL-STD-1913, similar to the first inboard mounting rail **36**, and has a length L_2 (FIG. **4**) of approximately 6 inches.

A distal extension or tail **62** extends laterally outwardly and longitudinally forwardly of the beam **30**. The tail **62** is cantilevered outwardly from a second side surface **61** of the beam **30** and is curved downwardly to provide clearance for the barrels **20** of the weapon **12** (FIG. **6**). More particularly, the tail **62** includes an arcuate arm or body **63** that conforms to the circumference of the weapon **12** as defined by the barrels **20**. In the illustrative embodiment shown in FIG. **5**, the tail **62** is formed integral with the beam **30**. However, as further detailed herein, the tail **62** may be a separate component coupled to the beam **30**.

Auxiliary or outboard mounting rails **64** and **66** are supported at a lateral end of the tail **62**. Illustratively, a first outboard mounting rail **64** is supported by an outside lateral edge of the tail **62**, and a second outboard mounting rail **66** is supported laterally inwardly thereto. In the illustrative embodiment shown in FIG. **5**, the outboard mounting rails **64** and **66** may be formed integral with the tail **62**. However, as further detailed herein, the outboard mounting rails **64** and **66** may be separate components coupled to the tail **62**. As shown in FIG. **7**, the outboard mounting rails **64** and **66** may be combined on opposing upper and lower portions of a support **69** extending vertically relative to the tail **62**. By extending

from opposing upper and lower portions of the support **69**, the desired mounting surface **68** and **70** may be accessible from above by rotating the support **69** by 180 degrees about its longitudinal (e.g. horizontal) axis.

The outboard mounting rails **64** and **66** may have various mounting surfaces **68** and **70**, such as the aforementioned MIL-STD-1913 or customized mounting surfaces for different accessories. In one illustrative embodiment, the first outboard mounting rail **64** is similar to the second inboard mounting rail **56**, and has a length L_3 of approximately 6 inches (FIG. **4**). The first outboard mounting rail **64** extends within a third mounting plane **65** parallel to, and positioned vertically below, the first mounting plane **31** (FIG. **6**). The second outboard mounting rail **66** may include customized spacing of ribs **38'** and slots **40'** for supporting specialized accessories, such as an illumination device or target illuminator available from SureFire® of Fountain Valley, Calif., and has a length L_4 of approximately 4.4 inches (FIG. **4**). The second outboard mounting rail **66** extends within a fourth mounting plane **67** parallel to, and positioned vertically above, the third mounting plane **65** (FIG. **6**).

A stabilizing member **72** illustratively extends laterally outwardly from the center portion **42** of the beam **30** intermediate the proximal and distal ends **32** and **34**. In the illustrative embodiment shown in FIG. **5**, the stabilizing member **72** is formed integral with the beam **30**. However, as further detailed herein, the stabilizing member **72** may be a separate component coupled to the beam **30**.

Stabilizing member **72** illustratively includes an arcuate arm **74** that is configured to follow the contour or circumference of the drive assembly **14** of the weapon **12** by extending laterally outwardly and vertically downwardly from the beam **30**. The arm **74** includes a plurality of mounting apertures **76** for receiving fasteners, such as screws **78**, configured to couple with the existing mounting points of the weapon **12** (FIG. **5**). For instance, mounting screws **78** for the gear head **16** may be utilized to support the stabilizing member **72** to the drive assembly **14** of the weapon **12**. The arcuate arm **74** may include a cutout or recess **73** configured to conform to the shape of the gear head **16** (FIG. **4**).

As shown in FIG. **3**, the beam **30** includes a recess or notch **75** in the lower surface **46** to permit user access to spring biased latch pins **77** of a cover or door **79** of weapon **12**. As is known, the door **79** may be pivoted open after the latch pins **77** are released by pinching them towards each other. Access through the door **79** may be desired, for example, to service and/or maintain the weapon **12**. In one illustrative embodiment, the door **79** may form part of a top cover/safing sector assembly accessible to ensure that all chambers are clear of ammunition and safe the weapon **12**. A chamfered or inclined surface **81** is provided to facilitate tool (e.g. screwdriver) access to the door **79**.

With reference to FIGS. **7** and **8**, a modular embodiment adapter **10'** is shown as including separable and removable components as opposed to the integrally formed components of the adapter **10** detailed above. Multiple separable components may reduce the time and cost associated with manufacturing of the adapter **10'**. As shown, a plurality of separation points **102***a*, **102***b*, **102***c*, **102***d*, and **102***e* are defined by releasable couplers. For example, separation point **102***a* is illustratively defined between the beam **30'** and the second inboard mounting rail **56**. It should be appreciated that the first inboard mounting rail **36** may likewise be removably coupled to the beam **30'** by releasable coupler (not shown). A separation point **102***b* may be defined between the tail **62** and the beam **30'**, and a separation point **102***c* may be defined between the outboard mounting rails **64** and **66** and the tail **62**. Further illustratively, a separation point **102***d* may be defined between the stabilizing member **72** and the beam **30'**. With further reference to FIG. **7**, the beam **30'** may include a proximal portion **30***a* and a distal portion **30***b* coupled together at a separation point **102***e*.

The releasable couplers defining the separation points **102** may comprise any suitable coupling arrangement. As shown in FIG. **8**, an interlocking joint may be defined by a dovetail coupler **104** including a tongue **106** slidably received within a groove **108**. Conventional fasteners (not shown) may be used in addition to, or instead of, the dovetail coupler **104** to secure the respective removable components together.

The mounting rails **36**, **56**, **64**, and **66** may be utilized to support a variety of weapon supplemental devices and accessories, such as for example, electronic devices, scopes, sights, lights, lasers, adapters, and any other desired gear. For example, as shown in FIG. **9**, an illumination device, such as a target light **80** may be supported on the outboard mounting rail **66**, while an optical sight **82** may be supported on the first inboard mounting rail **36**, and a range finder **84** may be supported on the second inboard mounting rail **56**. FIGS. **12-14** illustrate various accessory mounting configurations including no accessories (FIG. **12**), a first illuminating device **80** mounted to the second outboard mounting rail **66** (FIG. **13**), and a second illuminating device **80'** mounted to the first outboard mounting rail **64** (FIG. **14**).

FIGS. **10**, **15**, and **16** show a protective shield **86** including a vertical slot **88** having an open upper end **89** for receiving the barrels **20** of the weapon **12** along with the portion of the adapter **10** positioned thereabove. The protective shield **86** is illustratively formed of steel and is configured to protect the gunner from small arms fire and explosive blasts. The weapon **12** is supported for pivoting movement within the slot **88**. The mounting rails **64** and **66** of the tail **62** are supported on a first or distal side **91** of the protective shield **86**, while the grip **22** (and hence gunner) is positioned on an opposite second or proximal side **93** of the protective shield **86**. As such, the shield **86** reduces splash-back of light onto the gunner from illumination devices **80**, **80'** supported by mounting rails **64** and **66** proximate the distal end **34** of the beam **30**.

The tail **62** extends longitudinally away from the beam **30** (i.e., distally) to prevent undesirable contact between accessories supported by the tail **62** and the shield **86** during pivoting movement of the weapon **12** about the horizontal axis **21** and within the slot **88**. In one illustrative embodiment, length L_5 from the rear edge **90** of the tail **62** to the mounting portion **42** of the beam **30** is approximately 16 inches (FIG. **4**). The tail **62** includes an inner edge **92** curved toward the distal end **34** as it extends away from the beam **30** for providing clearance from the shield **86** as the weapon **12** pivots within the slot **88**. An outer edge **94** of tail **62** is also curved but has a different radius of curvature than the inner edge **92**, thereby providing increased support at the beam **30** and also defining an enlarged base **96** to provide additional support to the lateral end of tail **62** supporting mounting rails **64** and **66**. The adapter **10** is dimensioned to provide adequate clearance C (FIG. **16**) between accessories mounted on the outboard mounting rails **64** and **66** and the shield **86** for allowing unimpeded pivoting movement of the weapon **12** about the horizontal axis **21**. In one illustrative embodiment, the clearance C is approximately 5 inches. However, it should be appreciated that the clearance C will be dependent upon the type and configuration of shield **86**, relative positioning to the weapon **12**, and weapon movement stops as set by the user. With reference to FIGS. **15** and **16**, the adapter **10** of the present disclosure permits the axes of the inboard mounting rails **36** and **56** for optical/aiming devices **82** and **84**, and the

axis of the firing barrel **20***a* to be in substantial vertical alignment as represented by D_1 and D_2 in FIG. **15**. This alignment produces a lower height above the barrel **20***a* from typical conventional mounts which allows the use of limited adjustment ranges on existing aiming devices, thus permitting point zeroing of the device to specific ranges. Additionally, this also produces a "closer to the bore" parallel alignment of non-specific range zeroing to the firing barrel **20***a*. The cantilever design, based in a beam **30** of uniform strength, allows an illumination device **80** to mount on a horizontal axis closer to the firing barrel **20***a* (as represented by D_3 in FIG. **15**) than typical conventional mounts, which aids in zeroing and aiming the illumination device. The design also allows for added strength after supporting the accessories. It permits for the positioning of all illumination devices **80**, **80'** forward of the protective shield **86**, thus eliminating splash-back. Splash-back increases the chances of counter detection, resulting in the enemy's enhanced ability to identify the threat position. As shown in FIG. **13**, the illumination device **80** is positioned on the distal side **91** of the shield **86** in laterally spaced relation to the slot **88**. Illustratively the center of the illumination device **80** is laterally spaced from the axes **92***a*, **92***b* by distance D_4, which as shown is about 7 inches.

As shown in FIG. **9**, the multi-plane surfaces of the mounting rails **36**, **56**, **64**, and **66** support the simultaneous, in-line, and concurrent mounting and use of numerous accessories, such as optics, lights, and lasers. The rear extension or tail **62** of the adapter **10** allows the mounting of a current organic aiming device at the proper eye relief distance, thus allowing proper use of the device and negating reduction in engagement speed. The low profile of the adapter **10**, as well as the adapter's ability to mount devices out of the user's field of view, increases situational awareness, field of view during engagement, and reduces shielding of threat detection. The low profile also reduces the "above bore" distance for light, sight, and laser correlation which supports a more accurate fire control system.

FIGS. **17** and **18** illustrate a further illustrative adapter **110** including a tail **162** having an outboard rail **164** configured to couple with an adapter **166**. More particularly, the outboard rail **164** may include a first mounting configuration (e.g. a customized configuration of ribs and slots **38'** and **40'**), while the adapter **166** may include a second mounting configuration (e.g. a Picatinny rail having ribs and slots **38** and **40** conforming to MIL-STD-1913). The adapter **166** is configured to be secured to the outboard rail **164** through conventional fasteners, such as bolts **168**. Securing the adapter **166** to the outboard rail **164** provides the flexibility of converting between different mounting configurations. A plurality of openings **170** may extend transversely through the beam **30** and are configured to reduce the overall weight of the adapter **10**.

While this invention has been described as having an exemplary design, the present invention may be further modified within the spirit and scope of this disclosure. This application is therefore intended to cover any variations, uses, or adaptations of the invention using its general principles. Further, this application is intended to cover such departures from the present disclosure as come within known or customary practice in the art to which this invention pertains.

What is claimed is:

1. An adapter for mounting on a weapon, the adapter comprising:

a beam extending longitudinally between opposing proximal and distal ends, the beam including an upper surface and a side surface;

a first inboard mounting rail supported by the upper surface of the beam;

a tail supported proximate the distal end of the beam, the tail including an arcuate body extending laterally outwardly and downwardly from the beam and conforming to the circumference of the weapon;

a first outboard mounting rail supported by the tail;

a stabilizing member positioned intermediate the proximal and distal ends of the beam, the stabilizing member including an arcuate arm extending laterally outwardly and downwardly from the beam and conforming to the circumference of the weapon; and

at least one coupler securing the stabilizing member to the weapon.

2. The adapter of claim **1**, further comprising a second inboard mounting rail positioned proximate the distal end of the beam, the second inboard mounting rail extending parallel to, and being angularly offset from, the first mounting rail.

3. The adapter of claim **1**, wherein the beam includes a center portion intermediate the proximal and distal ends, the proximal and distal ends being cantilevered from the center portion of the beam.

4. The adapter of claim **1**, wherein the tail extends longitudinally distally and vertically downwardly from the distal end of the beam.

5. The adapter of claim **1**, wherein the first outboard mounting rail extends parallel to the first inboard mounting rail.

6. The adapter of claim **1**, wherein the support is configured to mount to a machine gun including a plurality of circumferentially spaced, rotatable barrels.

7. The adapter of claim **6**, wherein the arcuate arm of the stabilizing member includes a cutout to conform to the shape of a gear head of the machine gun.

8. The adapter of claim **1**, further comprising a bearing member supported proximate the distal end of the beam.

9. The adapter of claim **8**, wherein the bearing member includes a housing, and a pin spring biased outwardly from the housing.

10. The adapter of claim **1**, further comprising a first accessory removably coupled to the first inboard mounting rail, and a second accessory removably coupled to the first outboard mounting rail.

11. The adapter of claim **10**, wherein the first accessory comprises an optical sight and the second accessory comprises one of an illumination device, a laser designator, and a range finder.

12. The adapter of claim **1**, wherein the proximal end of the beam is positioned on a first side of a protective shield, and the distal end of the beam is positioned on a second side of the protective shield.

13. The adapter of claim **12**, further comprising an illumination device supported by one of the mounting rails on the second side of the protective shield.

14. The adapter of claim **13**, wherein the illumination device is supported by the first outboard mounting rail supported by the tail.

15. The adapter of claim **1**, further comprising a second outboard mounting rail supported by the tail and extending parallel to the first outboard mounting rail.

16. The adapter of claim **1**, wherein each of the mounting rails includes a plurality of ribs, and a plurality of slots positioned intermediate adjacent pairs of the plurality of ribs.

* * * * *