US 20140173880A1

(19) United States

(12) Patent Application Publication

Miller et al.

(10) Pub. No.: US 2014/0173880 A1

(43) Pub. Date: Jun. 26, 2014

(54) **ACCESSORY MOUNTING APPARATUS FOR A VEHICLE**

(71) Applicant: **United States of America as represented by the Secretary of the Navy**, Crane, IN (US)

(72) Inventors: **Jason E. Miller**, Linton, IN (US); **Brent Terry**, Bedford, IN (US); **Garric Henry**, Bloomington, IN (US)

(73) Assignee: **United States of America as represented by the Secretary of the Navy**, Crane, IN (US)

(21) Appl. No.: **14/183,784**

(22) Filed: **Feb. 19, 2014**

Related U.S. Application Data

(62) Division of application No. 13/180,906, filed on Jul. 12, 2011.

(60) Provisional application No. 61/429,080, filed on Dec. 31, 2010.

Publication Classification

(51) **Int. Cl.**
B60R 11/00 (2006.01)

(52) **U.S. Cl.**
CPC ***B60R 11/00*** (2013.01)
USPC **29/525.01**

(57) **ABSTRACT**

An accessory mounting apparatus is provided for coupling to a vehicle roll bar. The accessory mounting apparatus illustratively includes a driver side clamping device configured to be secured to a driver side upright of the roll bar, and a passenger side clamping device configured to be secured to the passenger side upright of the roll bar. Protective sleeves cooperate with the clamping devices to protect the roll bar from damaging contact therewith. A laterally extending cross member extends between the driver side clamping device and the passenger side clamping device.

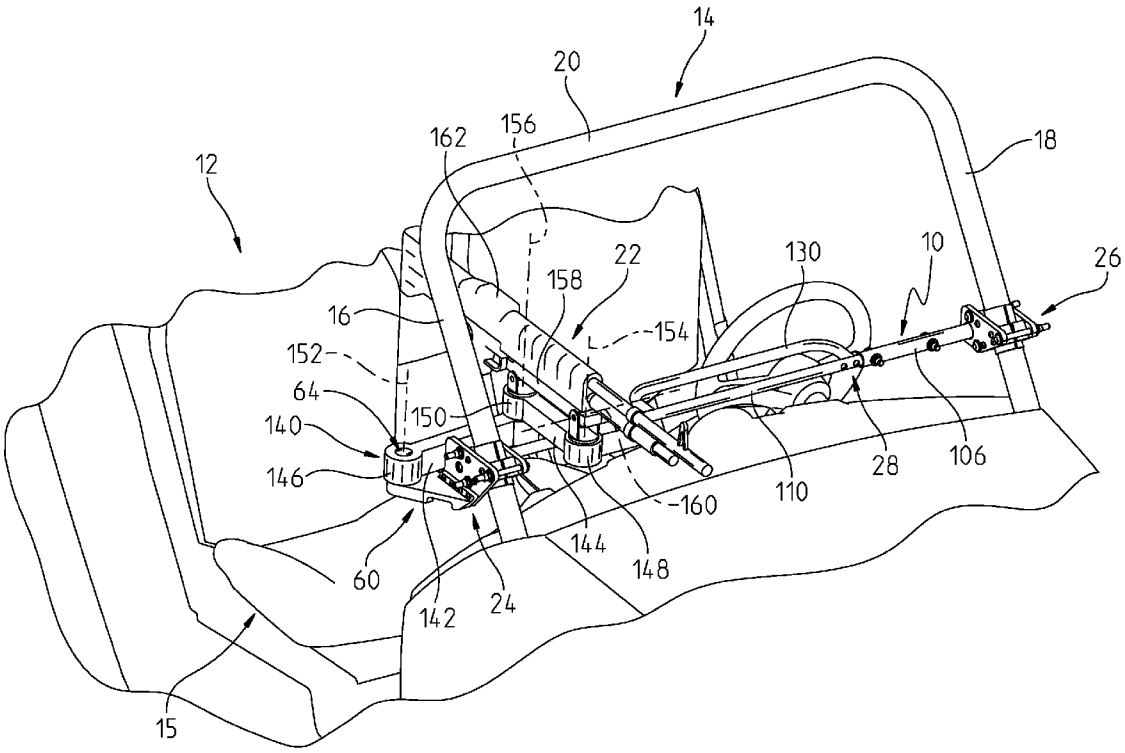

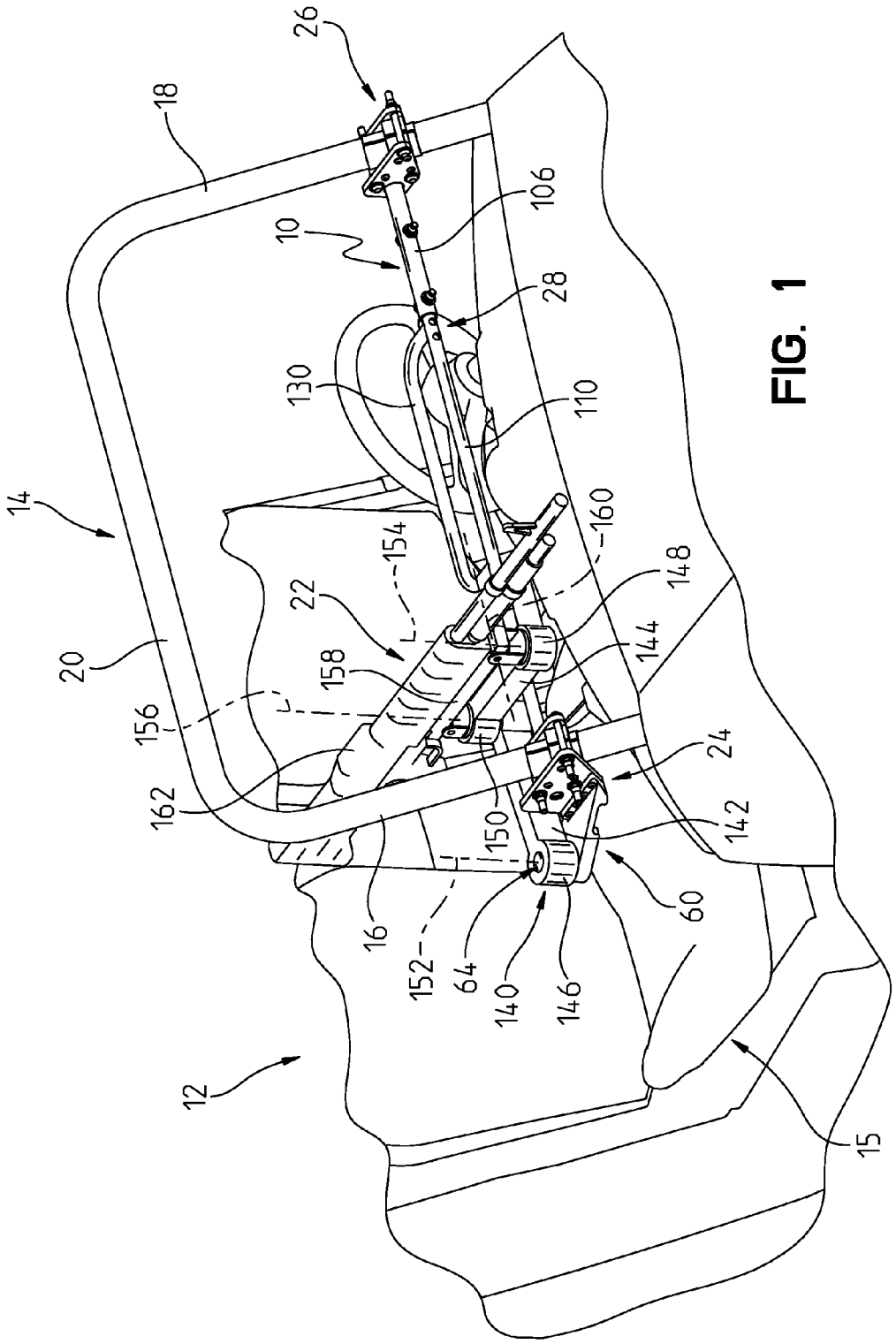
26
18
10
106
28
130
110
14
154
160
22
148
20
158
144
156
24
162
150
142
16
60
152
64
140
146
12
15

FIG. 1

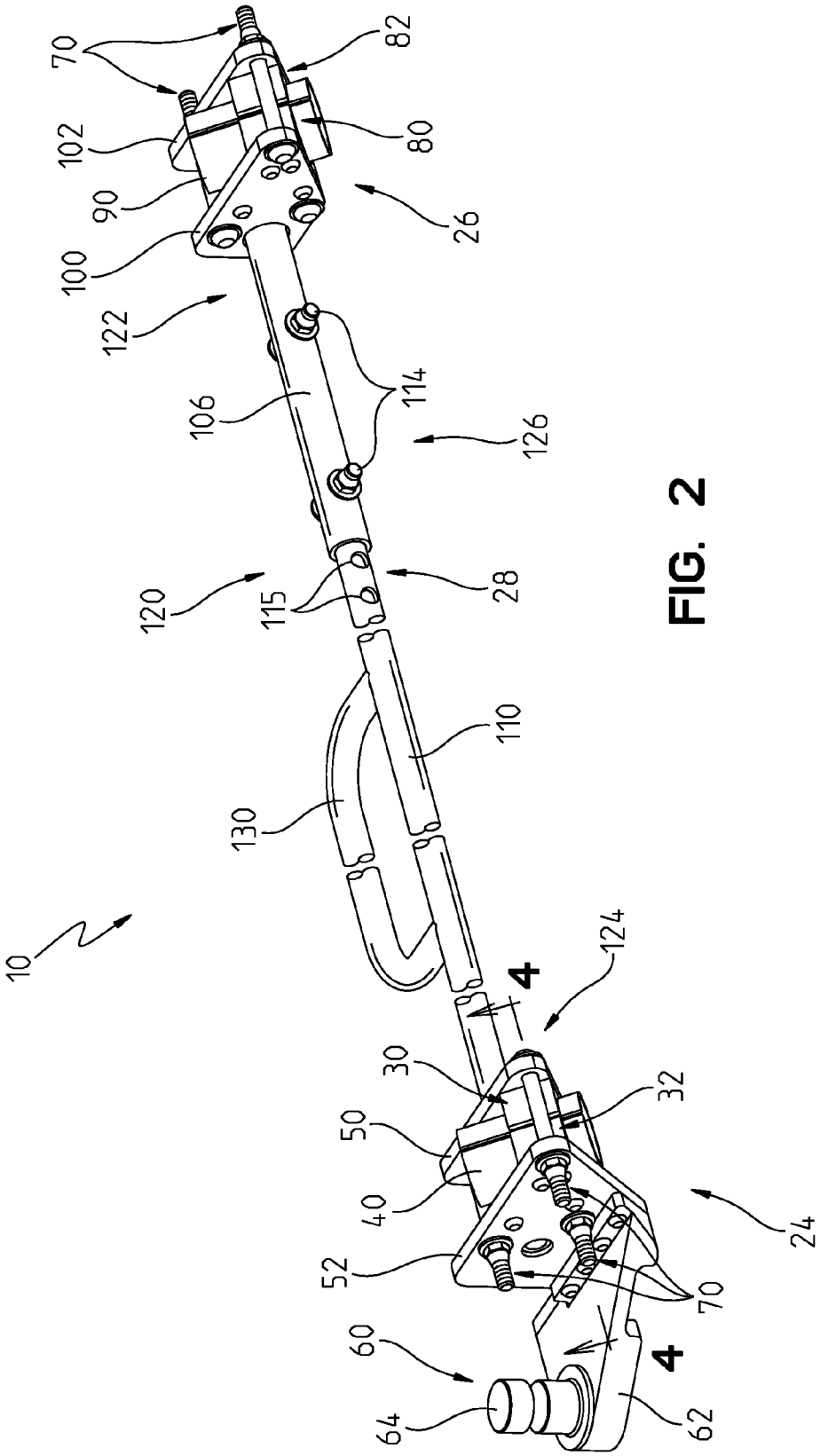
70
82
102
80
90
26
100
122
114
106
126
120
115
28
110
130
10
124
4
30
32
50
40
24
52
70
60
4
64
62

FIG. 2

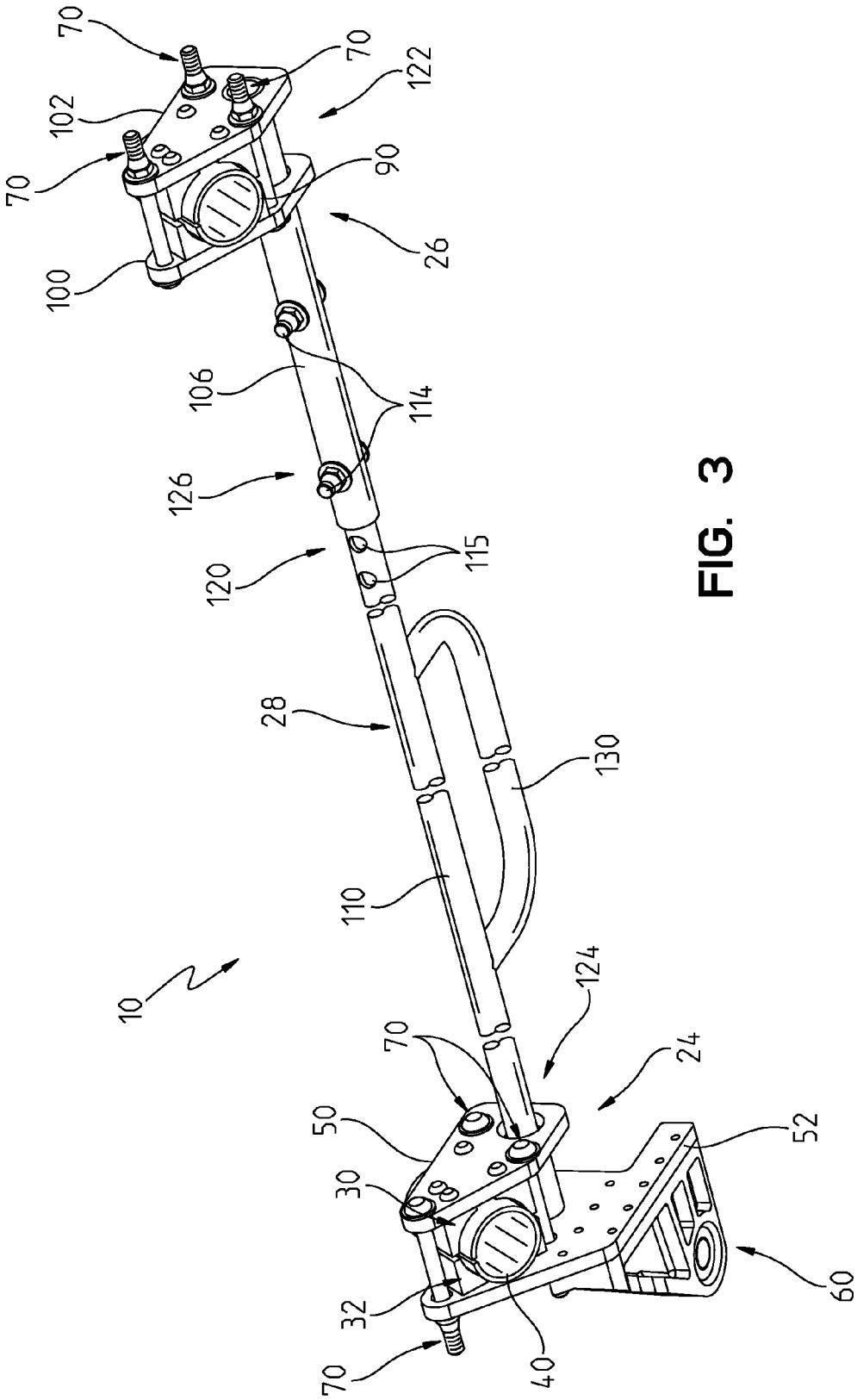
70
70
102
122
70
90
100
26
106
114
126
115
120
28
130
110
10
124
70
24
50
52
30
60
32
40
70

FIG. 3

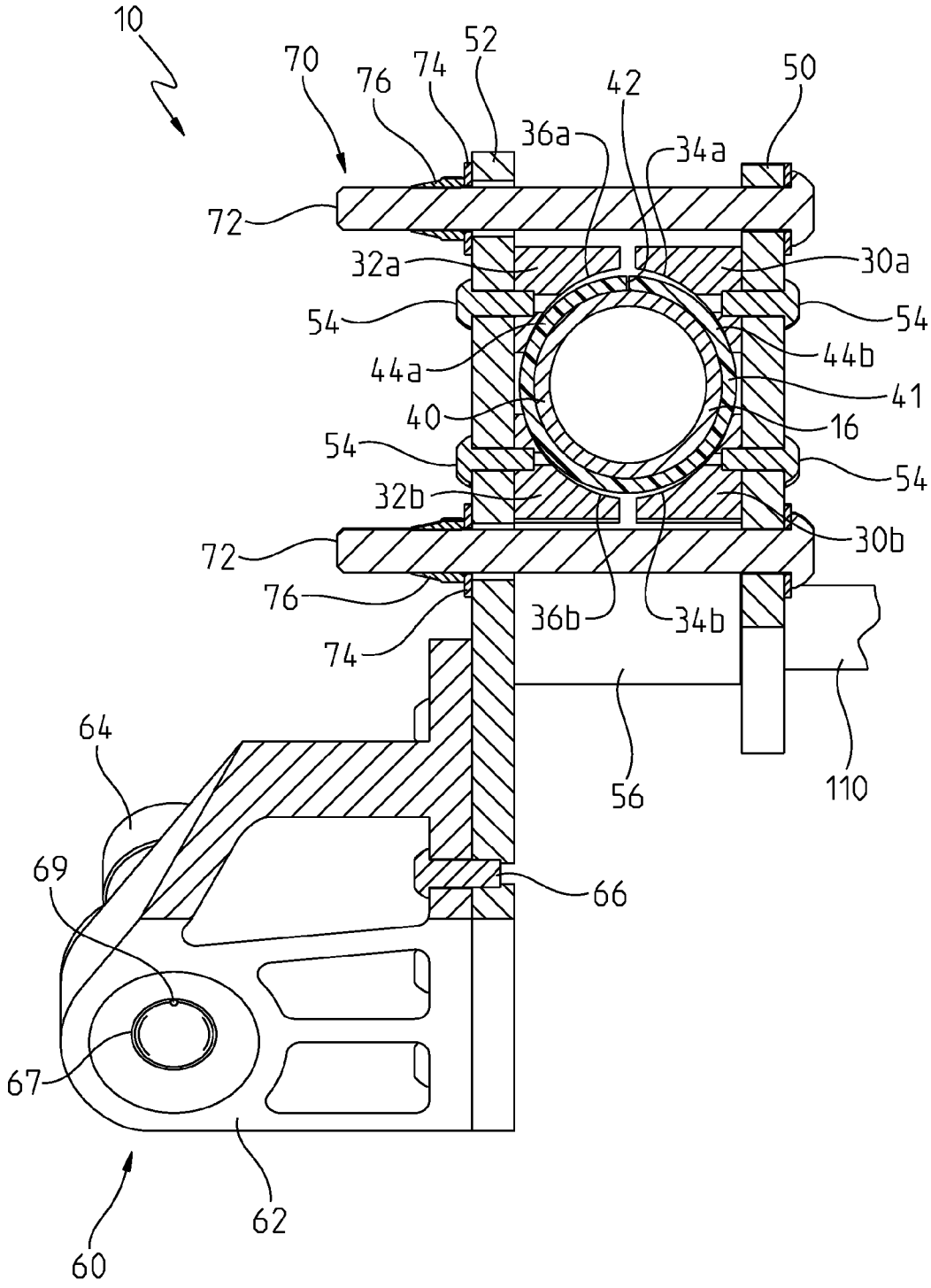
10
70
76
74
52
42
50
36a
34a
72
32a
30a
54
54
44a
44b
41
40
16
54
54
32b
30b
72
76
36b
34b
74
64
56
110
69
66
67
62
60

FIG. 4

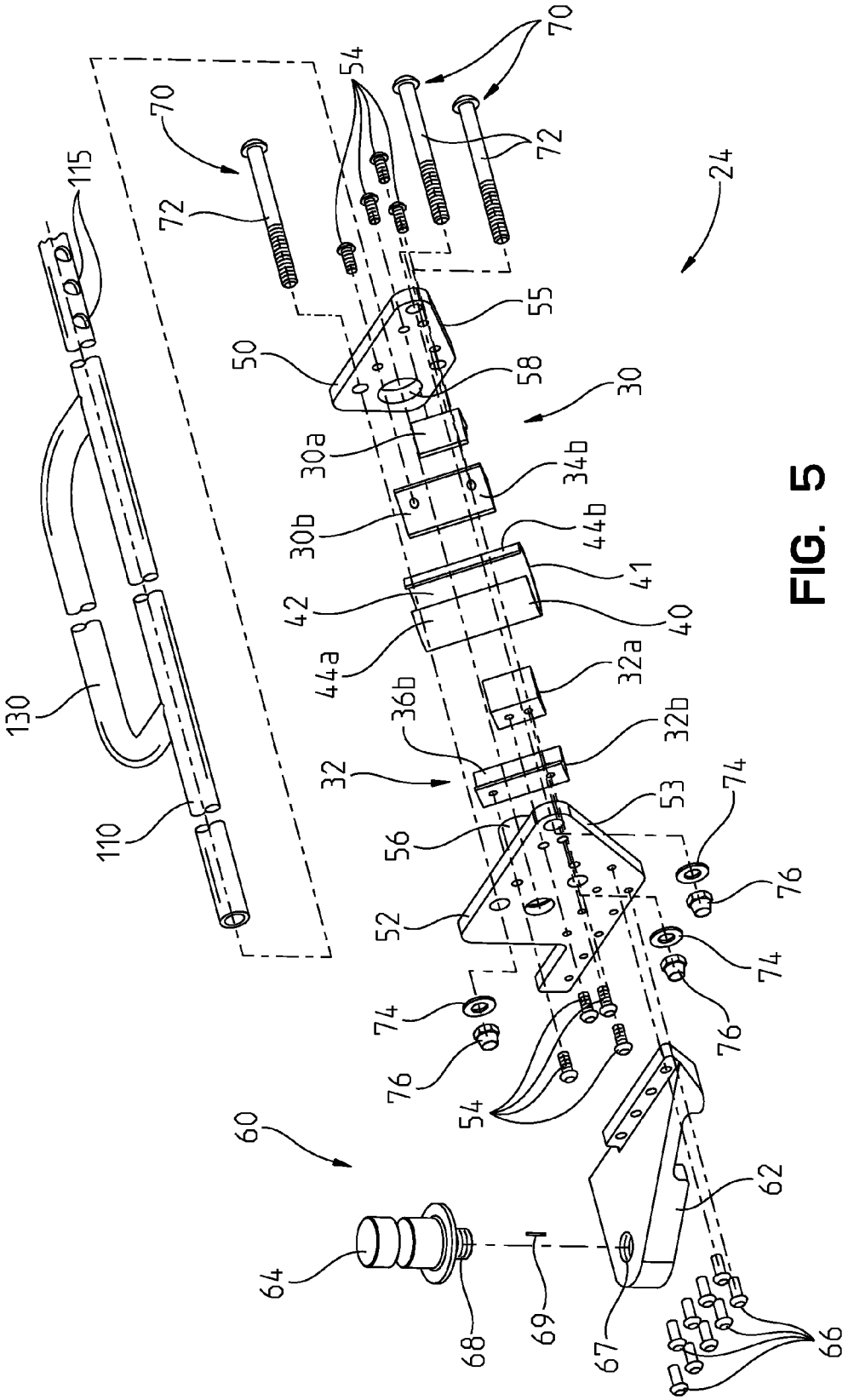
70
54
70
72
72
24
115
55
50
58
30
30a
34b
30b
44b
41
42
40
44a
32a
36b
32b
130
32
53
74
56
76
110
52
74
76
74
76
54
60
62
64
68
69
67
66

FIG. 5

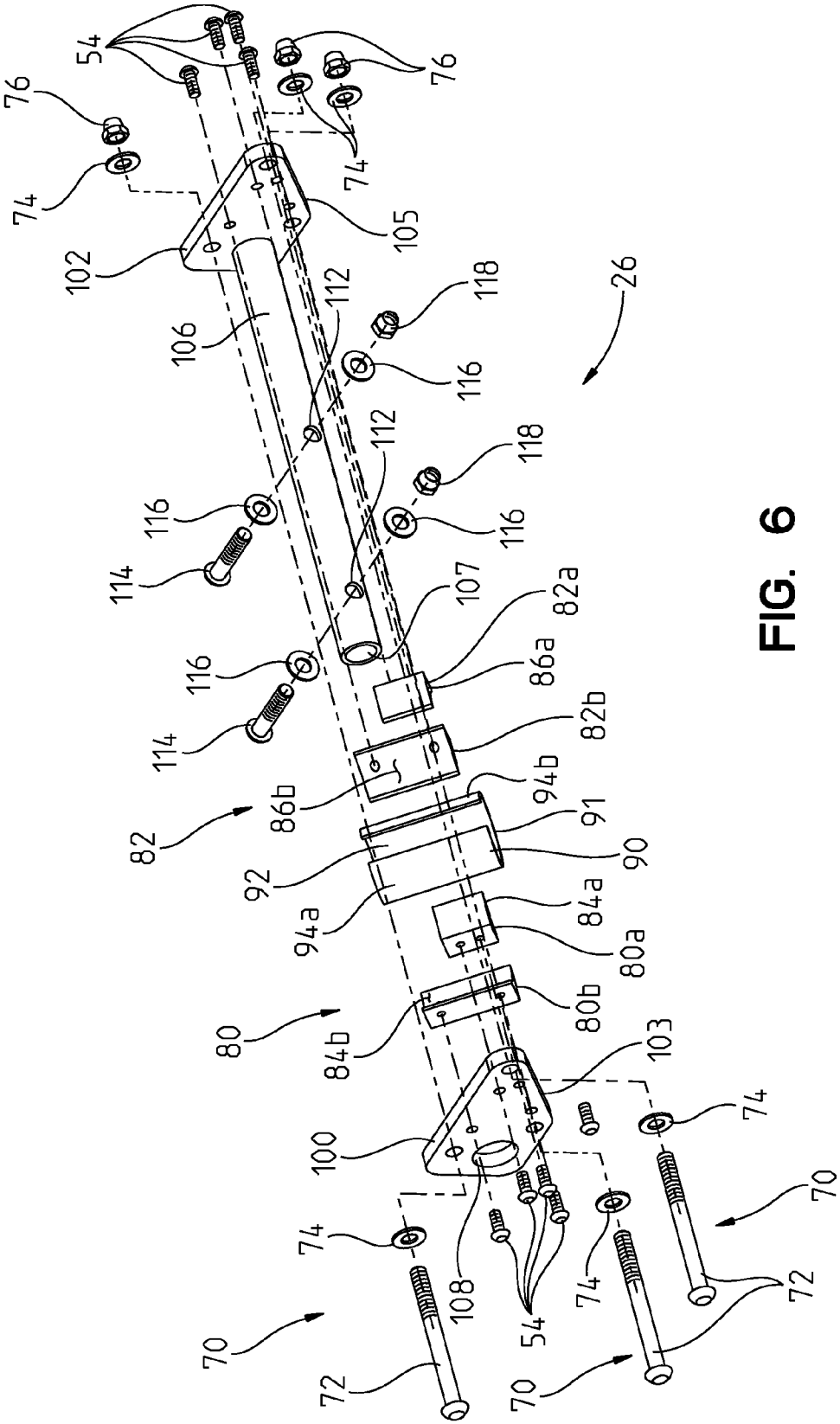
54
76
76
74
74
102
105
106
112
118
26
116
112
118
116
116
114
107
82a
86a
116
114
82b
86b
94b
82
91
92
90
94a
84a
80a
80
84b
80b
103
100
74
70
74
108
54
74
72
70
72
70

FIG. 6

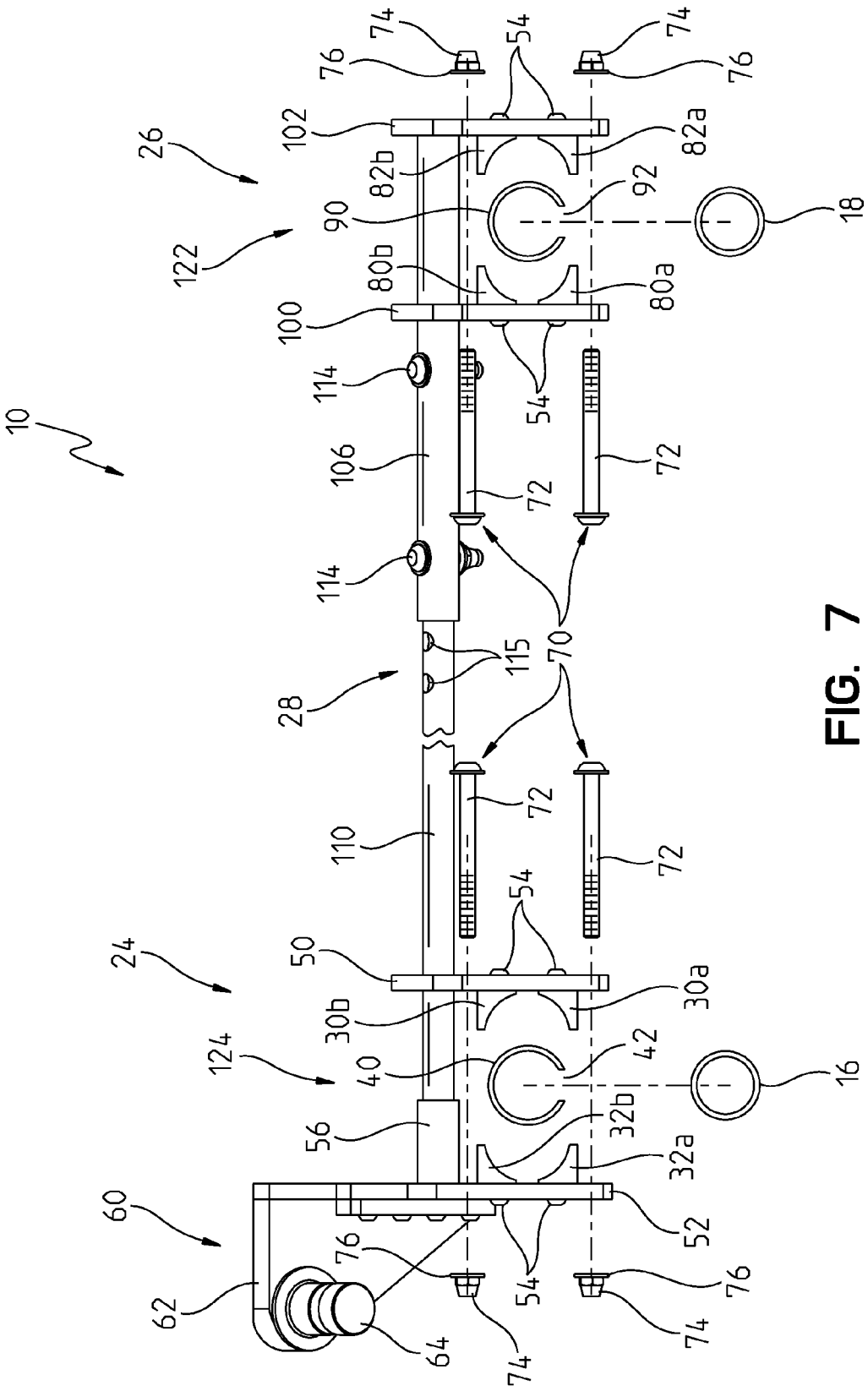
10
26
122
102
82b
82a
90
92
18
80b
80a
100
114
106
72
54
70
28
115
110
24
50
30b
30a
124
40
42
16
56
32b
32a
60
52
62
64
76
74

FIG. 7

ACCESSORY MOUNTING APPARATUS FOR A VEHICLE

CROSS-REFERENCE TO RELATED APPLICATION

[0001] This application is a divisional of U.S. patent application Ser. No. 13/180,906, filed Jul. 12, 2011,which claims priority to U.S. Provisional Patent Application Ser. No. 61/429,080, filed Dec. 31, 2010, the disclosures of which are expressly incorporated by reference herein.

STATEMENT REGARDING FEDERALLY SPONSORED RESEARCH OR DEVELOPMENT

[0002] The invention described herein was made in the performance of official duties by employees of the Department of the Navy and may be manufactured, used and licensed by or for the United States Government for any governmental purpose without payment of any royalties thereon.

BACKGROUND AND SUMMARY OF THE DISCLOSURE

[0003] The present disclosure relates generally to an accessory mounting apparatus for a vehicle and, more particularly, to an accessory mounting apparatus operably coupled to laterally spaced uprights of a vehicle roll bar.

[0004] Vehicles, such as all terrain vehicles (ATVs), are used for a variety of applications in rugged conditions. Depending upon the use of the vehicle, the operator may desire to have different accessories (such as cameras, surveying equipment, illumination devices, weapons, etc.) supported by the vehicle. A typical area of support is the roll bar of the vehicle. However, conventional roll bar mounting arrangements often pinch and deform the roll bar during installation and operation. As such, the integrity of the roll bar may be degraded, and the stability of the accessory may be reduced.

[0005] Accordingly, an accessory mounting apparatus for a vehicle roll bar that protects the integrity of the roll bar during installation and operation while providing enhanced stability of the accessory is desired.

[0006] According to an illustrative embodiment of the present disclosure, a mounting apparatus for a vehicle roll bar includes a pintle for rotatably supporting an accessory, and a bracket coupled to the pintle. A first clamping device includes first and second gripping members, having arcuate inner surfaces configured to be positioned on opposing sides of a first upright of a vehicle roll bar. The gripping members are operably coupled to the bracket. A protective sleeve is received between the first and second gripping members and provides a bearing surface against the roll bar.

[0007] According to a further illustrative embodiment of the present disclosure, a mounting apparatus for a vehicle roll bar includes a first clamping device having first and second gripping members with inner arcuate surfaces configured to be positioned on opposing sides of a first upright of a vehicle roll bar. A first protective sleeve is received within the gripping members and provides a bearing surface against the first upright of the vehicle roll bar. An accessory mount is operably coupled to the first clamping device and is configured to support an accessory. A second clamping device includes first and second gripping members with inner arcuate surfaces configured to be positioned on opposing sides of a second upright of the vehicle roll bar. A second protective sleeve is received within the gripping members of the second clamping device and provides a bearing surface against the second upright of the vehicle roll bar. A cross member includes a first end operably coupled to the first clamping device, and a second end operably coupled to the second clamping device, and an adjustment device configured to move the first end relative to the second end.

[0008] According to another illustrative embodiment of the present disclosure, a method of installing an accessory mount on a vehicle includes the steps of providing a roll bar including laterally spaced first and second uprights, fitting a first protective sleeve over the first upright, and clamping opposing first and second gripping members of a first clamping device around the first protective sleeve. The method further includes the steps of supporting a pintle from the first clamping device, and rotatably coupling an accessory to the pintle.

[0009] According to a further illustrative embodiment of the present disclosure, a method of installing an accessory mount on a vehicle includes the steps of providing a roll bar including a driver side upright and a passenger side upright, snap fitting a driver side protective sleeve over the driver side upright, and coupling together inner and outer clamping plates of a driver side clamping device by a fastener such that inner and outer gripping members secure the driver side protective sleeve to the driver side upright. The method further includes the steps of supporting a laterally extending driver side portion of a cross member by the driver side clamping device, slidably coupling a passenger side portion of the cross member with the driver side portion of the cross member, adjusting the relative position of opposing ends of the cross member, and securing the passenger side portion of the cross member relative to the driver side portion of the cross member. The method also includes the steps of snap fitting a passenger side protective sleeve over the passenger side upright, coupling the passenger side portion of the cross member to a passenger side clamping device, coupling together inner and outer clamping plates of the passenger side clamping device by a fastener such that inner and outer gripping members secure the passenger side protective sleeve to the passenger side upright. The method also includes the step of coupling an accessory to a mount supported by the passenger side clamping device.

BRIEF DESCRIPTION OF THE DRAWINGS

[0010] The foregoing aspects and many of the attendant advantages of this invention will become more readily appreciated as the same become better understood by reference to the following detailed description when taken in conjunction with the accompanying drawings.

[0011] FIG. **1** is a front perspective view of an illustrative accessory mounting apparatus coupled to a vehicle roll bar;

[0012] FIG. **2** is a top perspective view of the accessory mounting apparatus of FIG. **1**;

[0013] FIG. **3** is a bottom perspective view of the accessory mounting apparatus of FIG. **1**;

[0014] FIG. **4** is a cross-sectional view taken along line **4-4** of FIG. **2**;

[0015] FIG. **5** is an exploded perspective view of the passenger side clamping device of the accessory mounting apparatus of FIG. **2**;

[0016] FIG. **6** is an exploded perspective view of the driver side clamping device of the accessory mounting apparatus of FIG. **2**; and

[0017] FIG. **7** is a partially exploded bottom perspective view of the accessory mounting apparatus of FIG. **2**.

[0018] Corresponding reference characters indicate corresponding parts throughout the several views. Although the drawings represent embodiments of various features and components according to the present disclosure, the drawings are not necessarily to scale and certain features may be exaggerated in order to better illustrate and explain the present disclosure. The exemplification set out herein illustrates embodiments of the invention, and such exemplifications are not to be construed as limiting the scope of the invention in any manner.

DETAILED DESCRIPTION OF THE DRAWINGS

[0019] For the purposes of promoting an understanding of the principles of the invention, reference will now be made to the embodiments illustrated in the drawings, which are described below. The embodiments disclosed below are not intended to be exhaustive or limit the invention to the precise form disclosed in the following detailed description. Rather, the embodiments are chosen and described so that others skilled in the art may utilize their teachings. It will be understood that no limitation of the scope of the invention is thereby intended. The invention includes any alterations and further modifications in the illustrated devices and described methods and further applications of the principles of the invention which would normally occur to one skilled in the art to which the invention relates.

[0020] Referring initially to FIG. **1**, an accessory mounting apparatus **10** according to an illustrative embodiment of the present disclosure is shown coupled to a vehicle, such as an all terrain vehicle (ATV) **12** including a laterally extending roll bar **14** to protect occupants in a passenger portion **15** of the vehicle **12**. The roll bar **14** may be of conventional design and includes a hollow cylindrical tube (illustratively steel) formed to have an upwardly extending first or passenger side upright **16**, an upwardly extending second or driver side upright **18**, and an upper connecting member **20**.

[0021] The accessory mounting apparatus **10** illustratively extends laterally between passenger side upright **16** of a roll bar **14** and driver side upright **18** of the roll bar **14**. The accessory mounting apparatus **10** may support a variety of different accessories **22** for use by occupants in the passenger portion **15** of the vehicle **12**. While in the illustrative embodiment, accessory **22** is shown as a machine gun, it should be appreciated that other commonly used accessories may be substituted therefor, such as cameras, surveying equipment, and illumination devices.

[0022] With reference now to FIGS. **2** and **3**, the accessory mounting apparatus **10** includes a first or passenger side clamping device **24** configured to operably couple to the passenger side upright **16**, and a second or driver side clamping device **26** configured to operably couple to the driver side upright **18**. A cross member **28** extends laterally between the passenger side clamping device **24** and the driver side clamping device **26**.

[0023] With reference to FIGS. **4** and **5**, the passenger side clamping device **24** includes a inner or first gripping member **30** and an opposing outer or second gripping member **32**. Illustratively, each gripping member **30** and **32** is formed by cooperating portions **30***a*, **30***b* and **32***a*, **32***b* having arcuate inner surfaces **34***a*, **34***b* and **36***a*, **36***b*, respectively. More particularly, the first gripping member **30** may be collectively formed of front portion **30***a* and rear portion **30***b*, while the second gripper member **32** may be collectively formed of first portion **32***a* and second portion **32***b*. In other illustrative embodiments, the first and second gripping members **30** and **32** may be formed as a single integral component defining the inner arcuate surfaces **34** and **36**, respectively.

[0024] The arcuate inner surfaces **34***a*, **34***b* and **36***a*, **36***b* of the gripping members **30** and **32** are configured to be positioned on opposing sides of the passenger side upright **16**. The gripping members **30** and **32** are illustratively formed of a high strength fatigue resistant metal. Illustratively, the gripping members **30** and **32** are formed of 6061 aluminum to provide sufficient strength while being relatively light weight. Illustratively, the gripping members **30** and **32** are configured to be removed and replaced, by using common tools, with similar gripping members **30** and **32** having dimensions compatible with a larger or smaller diameter upright **16** of roll bar **14**.

[0025] A first or passenger side protective sleeve **40** is concentrically received over the passenger side upright **16** of roll bar **14** and is positioned within the arcuate surfaces **34**, **36** of the gripping members **30**, **32**. The sleeve **40** includes a substantially cylindrical side wall **41** having a longitudinally extending slot **42**. Illustratively, the side wall **41** is defined by inwardly biased first and second portions or arms **44***a*, **44***b*. The arms **44***a*, **44***b* of the protective sleeve **40** are configured to conform to the curvature of the inner surfaces **34** and **36** of the gripping members **30** and **32** to provide an inner bearing surface against the roll bar **14**. As such, the protective sleeve **40** provides an insulator between the gripping members **30**, **32** and the roll bar **14** to prevent potentially damaging contact therebetween. Illustratively, the protective sleeve **40** includes a side wall **41** formed of a polymer, such as a polyoxymethylene (POM), and having a thickness of about 0.125 inches. In one illustrative embodiment, the protective sleeve **40** is formed of Delrin®, available from DuPont Engineering Polymers of Wilmington, Del. As may be appreciated, the protective sleeve **40** is dimensioned to cooperate with the gripping members **30**, **32**.

[0026] The inner gripping member **30** is operably coupled to an inner or first clamping plate **50**, while the outer gripping member **32** is operably coupled to an outer or second clamping plate **52**. In the illustrative embodiment, the gripping members **30** and **32** are secured to the clamping plates **50** and **52** through conventional fasteners **54**. Other coupling means may be substituted therefor, including welding and/or adhesives. However, the use of fasteners **54** provides for reduced inspection costs and facilitates the joining of unlike materials as compared to a welded design.

[0027] As shown in FIG. **5**, the clamping plates **50** and **52** each have an asymmetrical shape including an angled leading edge **53** and **55**, respectively. The angled leading edges **53** and **55** are configured to provide additional clearance proximate the lower ends of roll bar uprights **16** and **18** for mounting of additional accessories and/or windshield brackets (not shown). To accommodate the irregular shape of the clamping plates **50**, **52**, each front portion **30***a*, **32***a* of gripping members **30**, **32** is illustratively shorter than its cooperating rear portion **30***b*, **32***b*. Illustratively, clamping plates **50** and **52** may be formed of metal, such as 6061 aluminum or C1018 steel.

[0028] A laterally inwardly extending cylindrical sleeve **56** is supported by the outer clamping plate **52**. An opening **58** is formed within the inner clamping plate **50** and is configured to receive the sleeve **56** of the outer clamping plate **52**.

[0029] A mount **60**, including a bracket **62** and a pintle **64**, is operably coupled to the outer clamping plate **52**. Illustratively, the bracket **62** is formed from a high strength fatigue resistant aluminum (e.g., 7075-T6 aluminum) in order to provide for weight savings while providing sufficient strength. Conventional fasteners **66** may be used to secure the bracket **62** to a lower end of the outer clamping plate **52**. The use of conventional fasteners **66** to couple the bracket **62** to the outer clamping plate **52** reduces inspection costs as compared to a welded design.

[0030] The pintle **64** includes a cylindrical shaft **68** coupled to the bracket **62** and extending upwardly therefrom. More particularly, a lower end of the shaft **68** is received within an opening **67** in the bracket **62**. A key **69** may be provided to locate and/or rotatably secure the pintle **64** relative to the bracket **62**. Illustratively, the pintle **64** is made from a high strength fatigue gall-resistant stainless steel (e.g., Nitronic® 60 stainless steel). The pintle **64** may be of conventional design for rotatably supporting an accessory coupled therewith.

[0031] The inner clamping plate **50** is operably coupled to the outer clamping plate **52** through a plurality of adjustable couplers **70**. Illustratively, the couplers **70** each include a bolt **72** passing through a washer **74** and threadably received within a nut **76**. When installed on the passenger side upright **16**, the inner and outer clamping plates **50** and **52** are forced towards each other by the couplers **70**. In turn, the gripping members **30** and **32** compress the protective sleeve **40** around the upright **16**. In the illustrative embodiment, the sleeve **40** has an inner diameter of about 2 inches when in a relaxed mode (i.e., no external forces applied), and an inner diameter of about 1.65 inches when compressed around the upright **16** by the passenger side clamping device **24**.

[0032] The driver side clamping device **26** includes similar features to the passenger side clamping device **24**. For example, the driver side clamping device **26** includes a inner or first gripping member **80** and an opposing outer or second gripping member **82**. Illustratively, each gripping member **80** and **82** is formed by cooperating portions **80***a*, **80***b* and **82***a*, **82***b* having arcuate inner surfaces **84***a*, **84***b* and **86***a*, **86***b*, respectively. More particularly, the first gripping member **80** may be collectively formed of front portion **80***a* and rear portion **80***b*, while the second gripper member **82** may be collectively formed of first portion **82***a* and second portion **82***b*. In other illustrative embodiments, the first and second gripping members **80** and **82** may be formed as a single integral component defining the inner arcuate surfaces **84** and **86**, respectively.

[0033] The arcuate inner surfaces **84***a*, **84***b* and **86***a*, **86***b* of the gripping members **80** and **82** are configured to be positioned on opposing sides of the driver side upright **18**. The gripping members **80** and **82** are illustratively formed of a high strength fatigue resistant metal, such as 6061 aluminum. Illustratively, the gripping members **80** and **82** are configured to be removed and replaced, by using common tools, with similar gripping members **80** and **82** having diameters compatible with a larger or smaller diameter upright **18** of roll bar **14**.

[0034] A second or driver side protective sleeve **90** is concentrically received within the gripping members **80** and **82** and may be identical to the passenger side protective sleeve **40** as detailed above. More particularly, the passenger side protective sleeve **90** is concentrically received over the driver side upright **18** of roll bar **14** and is positioned within the arcuate surfaces **84**, **86** of the gripping members **80**, **82**. The sleeve **90** includes a substantially cylindrical side wall **91** having a longitudinally extending slot **92**. Illustratively, the side wall **91** is defined by inwardly biased first and second portions or arms **94***a*, **94***b*. The arms **94***a*, **94***b* of the protective sleeve **90** are configured to conform to the curvature of the inner surfaces **84** and **86** of the gripping members **80** and **82** to provide an inner bearing surface against the roll bar **14**. As such, the protective sleeve **90** provides an insulator between the gripping members **80**, **82** and the roll bar **14** to prevent potentially damaging contact therebetween. As may be appreciated, the protective sleeve **90** is dimensioned to cooperate with the gripping members **80**, **82**.

[0035] The inner gripping member **80** is operably coupled to an inner or first clamping plate **100**, while the outer gripping member **82** is operably coupled to an outer or second clamping plate **102**. In the illustrative embodiment, the gripping members **80** and **82** are secured to the clamping plates **100** and **102** through conventional fasteners **54**. To accommodate the irregular shape of the clamping plates **100**, **102**, and more particularly angled leading edges **103** and **105**, respectively, each front portion **80***a*, **82***a* of gripping members **80**, **82** is illustratively shorter than its cooperating rear portion **80***b*, **82***b*. Illustratively, clamping plates **100** and **102** may be formed of metal, such as 6061 aluminum or C1018 steel.

[0036] The inner clamping plate **100** is operably coupled to the outer clamping plate **102** through a plurality of adjustable couplers **70**. As detailed above, the couplers **70** each illustratively include a bolt **72** passing through a washer **74** and threadably received within a nut **76**. When installed on the driver side upright **18**, the inner and outer clamping plates **100** and **102** are forced towards each other by the couplers **70**. In turn, the gripping members **80** and **82** compress the protective sleeve **90** around the upright **18**.

[0037] In certain illustrative embodiments, the driver side clamping device **26** may include a mount similar to mount **60** of the passenger side clamping device **24**. For example, driver side clamping device **26** may include a mirror image of mount **60** for supporting driver accessible hardware or accessories.

[0038] A first or driver side portion **106** of the cross member **28** is coupled to the outer clamping plate **102**. Illustratively, the driver side portion **106** comprises a longitudinally extending cylindrical sleeve having a receiving chamber **107**. The driver side portion **106** extends through an opening **108** in the inner clamping plate **100**. A second or passenger side portion **110** of the cross member **28** includes a first end slidably received within the chamber **107** of the driver side portion **106** of cross member **28**. A second end of the passenger side portion **110** of the cross member **28** is slidably received within the sleeve **56** of the passenger side clamping device **124**.

[0039] A pair of openings **112** is formed in the driver side portion **106** and extends perpendicular to chamber **107**. Similarly, a plurality of openings **115** extend through the passenger side portion **110** and are selectively alignable with openings **112** of the driver side portion **106**. A pair of bolts **114** pass through openings **112** and **115** to secure the first and second portions **106** and **110** of the cross member **28** relative to each other. The bolts **114** illustratively pass through washers **116** and are threadably coupled to nuts **118**.

[0040] As noted above, the driver side portion **106** of the cross member **28** is configured to slidably receive the passenger side portion **110**. The plurality of openings **115** in the passenger side portion **110** are configured to selectively align

with the openings **112** formed in the driver side portion **106** and secured in position by the bolts **114**. In other words, the driver side portion **106** slidably receives in a telescoping manner the passenger side portion **110** to provide an adjustment device **120** of the cross member **28**. More particularly, the adjustment device **120** permits a first end **122** of the cross member **28** to be adjusted relative to a second end **124** of the cross member **28**. The bolts **114** received within the aligned openings **112** and **115** of the respective cross member portions **106** and **110** define a locking device **126** to secure the relative position of the portions **106** and **110**, and therefore the first end **122** of the cross member **28** relative to the second end **124** of the cross member **28**.

[0041] A handle **130** may be positioned intermediate the first and second ends **122** and **124** of the cross member **28**. The handle **130** is configured for use by a vehicle occupant to stabilize him during operation of the accessory **22**, particularly when the vehicle **12** is moving.

[0042] With further reference to FIG. **1**, the mount **60** is configured to rotatably support accessory **22**. In the illustrative embodiment, a swing arm **140** is supported by the pintle **64** of mount **60** and includes first and second arms **142** and **144**, respectively. A first end **146** of the swing arm **140** is coupled to the pintle **64** to facilitate rotation of the first arm **142** about a first vertical axis **152**. The swing arm **140** includes a second end **148** supporting the accessory **22** for rotation about a second vertical axis **154**. An intermediate pivot joint **150** is provided between the first end **146** and the second end **148** and is configured to provide for rotational movement of the first arm **142** relative to the second arm **144** about a third vertical axis **156**.

[0043] A cradle **158** is illustratively supported by the second end **148** of the swing arm **140** for rotation about the second vertical axis **154**. In one illustrative embodiment, the cradle **158** is supported for pivoting movement about a horizontal axis **160**. Illustratively, the cradle **158** may be configured to support a 7.62 mm machine gun **162**. In one illustrative embodiment, the swing arm **140** is an SA4 swing arm and the cradle **158** is an H24-6 machine gun mount.

[0044] In the illustrative embodiment, the accessory mounting apparatus **10** is capable of sustaining anticipated forces without yielding of components of the mounting apparatus **10** or roll bar **14**. More particularly, the mount **60** coupled to the passenger side clamping device **24** is configured to withstand without yielding an approximately 639 lb. recoil force and an approximately 180 lb. vertical force on a moment arm of about 36 inches.

[0045] With reference now to FIGS. **1** and **7**, installation of the accessory mounting apparatus **10** will be further detailed. An illustrative installation method includes the steps of providing the roll bar **14** with laterally spaced passenger side and driver side uprights **16** and **18**, respectively. The driver side protective sleeve **90** is snap fit over the driver side upright **18**. More particularly, the slot **92** of the driver side protective sleeve **90** is passed over the driver side upright **18** such that the opposing portions **94***a*, **94***b* of the sleeve **90** bias inwardly toward each other after passing over the circumference of the upright **18** and snap into position. The inner and outer clamping plates **100** and **102** supporting the inner and outer gripping members **80** and **82** are then secured together using the couplers **70**. The second portion **110** of the cross member **28** is then slidably received within the first portion **106** of the cross member **28**. The second and first portions **110** and **106** are then adjusted such that the first and second ends **122** and **124** are positioned with the appropriate spacing for the uprights **16** and **18** of the vehicle roll bar **14**.

[0046] The bolts **114** are then used to secure the second portion **110** of the cross member relative to the first portion **106**. The passenger side protective sleeve **40** is then snap fit over the passenger side upright **16**. Again, the slot **42** of the passenger side protective sleeve **40** is passed over the passenger side upright **16** such that the opposing portions **44***a* and **44***b* are biased over the circumference of the upright **16** and snap into position. The inner clamping plate **50** is then slid over the second portion **110** of the cross member **28** while the sleeve **56** of the outer clamping plate **52** receives the second end **124** of the cross member **28**. The inner and outer clamping plates **50** and **52** supporting the inner and outer gripping members **30** and **32** are then secured together using the couplers **70**. The bolts **72** for both the driver side clamping device **26** and the passenger side clamping device **24** are then torqued to specified values to secure them to the roll bar **14**. The torque values are illustratively those recommended for the selected fastener grade and size.

[0047] Now that the accessory mounting apparatus is secured to the vehicle roll bar **14**, the accessory **22** may be mounted in position. The first end **146** of the swing arm **140** is coupled to the pintle **64**. Next, cradle **158** is rotatably coupled to second end **148** of the swing arm **140**. Machine gun **162** may then be secured to the cradle **158** which, as noted above, is supported for pivoting movement about horizontal axis **160**.

[0048] While this invention has been described as having an exemplary design, the present invention may be further modified within the spirit and scope of this disclosure. This application is therefore intended to cover any variations, uses, or adaptations of the invention using its general principles. Further, this application is intended to cover such departures from the present disclosure as come within known or customary practice in the art to which this invention pertains.

1-19. (canceled)

20. A method of installing an accessory mount on a vehicle, the method comprising the steps of:

providing a roll bar including laterally spaced first and second uprights;

fitting a first protective sleeve over the first upright;

clamping opposing first and second gripping members of a first clamping device around the first protective sleeve;

supporting a pintle from the first clamping device; and

rotatably coupling an accessory to the pintle.

21. The method of claim **20**, wherein the step of fitting the first protective sleeve includes passing the first upright through a slot formed between opposing portions of the first protective sleeve, the opposing portions being biased towards each other toward the slot.

22. The method of claim **20**, wherein the step of clamping opposing first and second gripping members includes the steps of coupling a first clamping plate to the first gripping member, coupling a second clamping plate to the second gripping member, and tightening a fastener extending between the first clamping plate and the second clamping plate to force the first gripping member toward the second gripping member.

23. The method of claim **20**, wherein the step of rotatably coupling an accessory includes the steps of rotatably coupling a first end of a swing arm to the pintle, and rotatably coupling the accessory to a second end of the swing arm.

24. The method of claim **23**, wherein the step of rotatably coupling an accessory further includes the step of rotatably coupling a cradle to the second end of the swing arm, and coupling a machine gun to the cradle.

25. The method of claim **20**, further comprising the steps of:

fitting a second protective sleeve over the second upright;

clamping opposing first and second gripping members of a second clamping device around the second protective sleeve; and

supporting a cross member between the first and second clamping devices.

26. The method of claim **25**, further comprising the steps of adjusting the relative position of a first end of the cross member relative to a second end of the cross member, and securing the adjusted position of the first end relative to the second end.

27. A method of installing an accessory mount on a vehicle, the method comprising the steps of:

providing a roll bar including a driver side upright and a passenger side upright;

snap fitting a driver side protective sleeve over the driver side upright;

coupling together inner and outer clamping plates of a driver side clamping device by a fastener such that inner and outer gripping members secure the driver side protective sleeve to the driver side upright;

supporting a laterally extending driver side portion of a cross member by the driver side clamping device;

slidably coupling a passenger side portion of the cross member with the driver side portion of the cross member;

adjusting the relative position of opposing ends of the cross member;

securing the passenger side portion of the cross member relative to the driver side portion of the cross member;

snap fitting a passenger side protective sleeve over the passenger side upright;

coupling the passenger side portion of the cross member to a passenger side clamping device;

coupling together inner and outer clamping plates of the passenger side clamping device by a fastener such that inner and outer gripping members secure the passenger side protective sleeve to the passenger side upright; and

coupling an accessory to a mount supported by the passenger side clamping device.

28. The method of claim **27**, wherein:

the step of snap fitting the driver side protective sleeve includes passing the driver side upright through a slot formed between opposing portions of the driver side protective sleeve; and

the step of snap fitting the passenger side protective sleeve includes passing the passenger side upright through a slot formed between opposing portions of the passenger side protective sleeve.

29. The method of claim **27**, wherein the step of coupling an accessory includes the steps of rotatably coupling a first end of a swing arm to the mount, and rotatably coupling the accessory to a second end of the swing arm.

30. The method of claim **29**, wherein the step of coupling an accessory further includes the step of rotatably coupling a cradle to the second end of the swing arm, and coupling a machine gun to the cradle.

* * * * *