US008146480B2

(12) **United States Patent**
Schneider et al.

(10) **Patent No.: US 8,146,480 B2**
(45) **Date of Patent: Apr. 3, 2012**

(54) **VEHICLE PROTECTIVE STRUCTURE**

(75) Inventors: **John Schneider**, Huntingburg, IN (US); **Christopher Brown**, Bloomington, IN (US); **Robin Cromwell**, Mitchell, IN (US); **Donald Lowe**, San Antonio, TX (US)

(73) Assignee: **The United States of America as represented by the Secretary of the Navy**, Washington, DC (US)

(*) Notice: Subject to any disclaimer, the term of this patent is extended or adjusted under 35 U.S.C. 154(b) by 0 days.

(21) Appl. No.: **12/844,899**

(22) Filed: **Jul. 28, 2010**

(65) **Prior Publication Data**

US 2011/0154981 A1 Jun. 30, 2011

Related U.S. Application Data

(63) Continuation of application No. 11/998,977, filed on Nov. 10, 2007, now Pat. No. 7,823,498.

(51) **Int. Cl.**
F41H 7/02 (2006.01)

(52) **U.S. Cl.** **89/36.13**; 89/36.08; 89/40.03

(58) **Field of Classification Search** 89/36.08, 89/36.13, 40.03; 296/187.01
See application file for complete search history.

(56) **References Cited**

U.S. PATENT DOCUMENTS

1,928,306	A	9/1933	Brennan	
2,388,873	A	11/1945	Schwab	
2,436,374	A	2/1948	Birdsall	
3,586,236	A	6/1971	Schaffler	
3,942,598	A	3/1976	Council	
4,358,984	A	11/1982	Winblad	
4,715,263	A	12/1987	Kramer	
4,934,246	A	6/1990	Benson et al.	
5,815,302	A	9/1998	McVey et al.	
5,942,716	A	8/1999	Miller	
6,302,010	B1 *	10/2001	Holler	296/187.07
6,622,607	B1	9/2003	Miller	
7,325,475	B2 *	2/2008	Long	89/36.08
D622,182	S *	8/2010	Parimi et al.	D12/12
2005/0188831	A1	9/2005	Squires	
2007/0000377	A1	1/2007	Ohnstad	
2007/0131103	A1	6/2007	McClellan	

OTHER PUBLICATIONS

ArmorHoldings.com, http://adg.armorholdings.com/pdfs/Improved%20Gunner%20Protection%20Kit.pdf, viewed Oct. 29,2007.

(Continued)

Primary Examiner — Stephen M Johnson
(74) *Attorney, Agent, or Firm* — Christopher A. Monsey

(57) **ABSTRACT**

A protective structure for a vehicle having an opening on an upper surface is provided. One embodiment of the invention has at least a partial enclosure around an area defined laterally by the vehicle opening with an overhead and side protective capability. An embodiment of the invention has an overhead cover that is formed to substantially enclose a top area of the enclosure and having multiple panels that may be locked into place or opened by an occupant for exit through a top area of the enclosure. The multiple panels in this embodiment extend upwardly and inwardly from a section of the enclosure's side walls. Ballistic windows are provided on the protective structure such that an occupant can view laterally and vertically through the enclosure and overhead cover. A shield or protective plate can be mounted on one side of the enclosure.

11 Claims, 13 Drawing Sheets

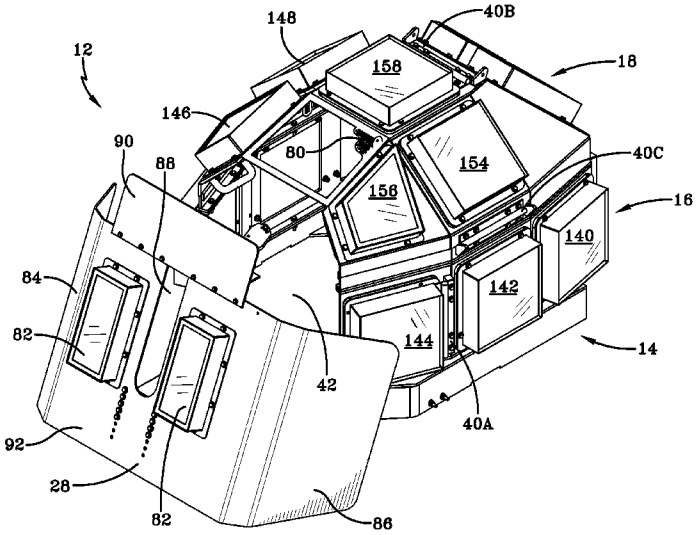

OTHER PUBLICATIONS

Picatinny Designs Latest Advancement in Gunner Protection, http://www.pica.army.mil/PicatinnyPublic/warfighter/index.asp, dated Mar. 29, 2007, viewed Oct. 29, 2007.

Patrick A. Serao, http://www.dtic.mil/ndia/2007armaments/Serao.pdf, Jun. 12, 2007, p. 7, viewed Oct. 29, 2007.

* cited by examiner

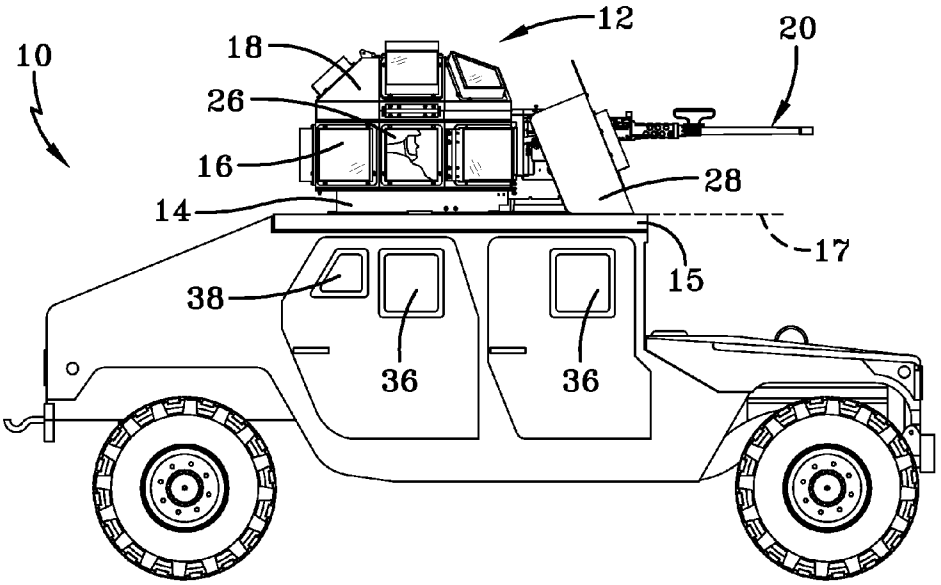

FIG–1

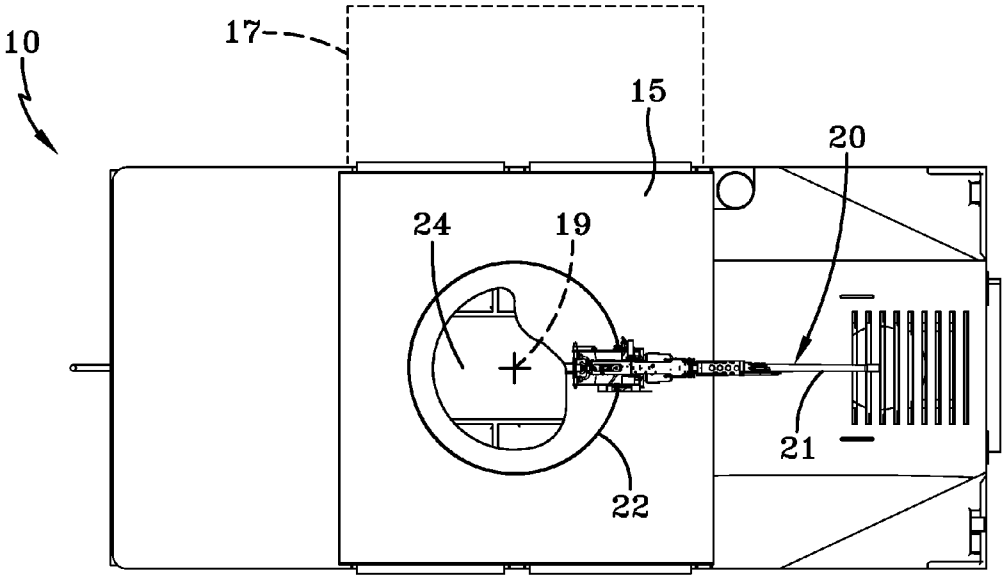

FIG–2

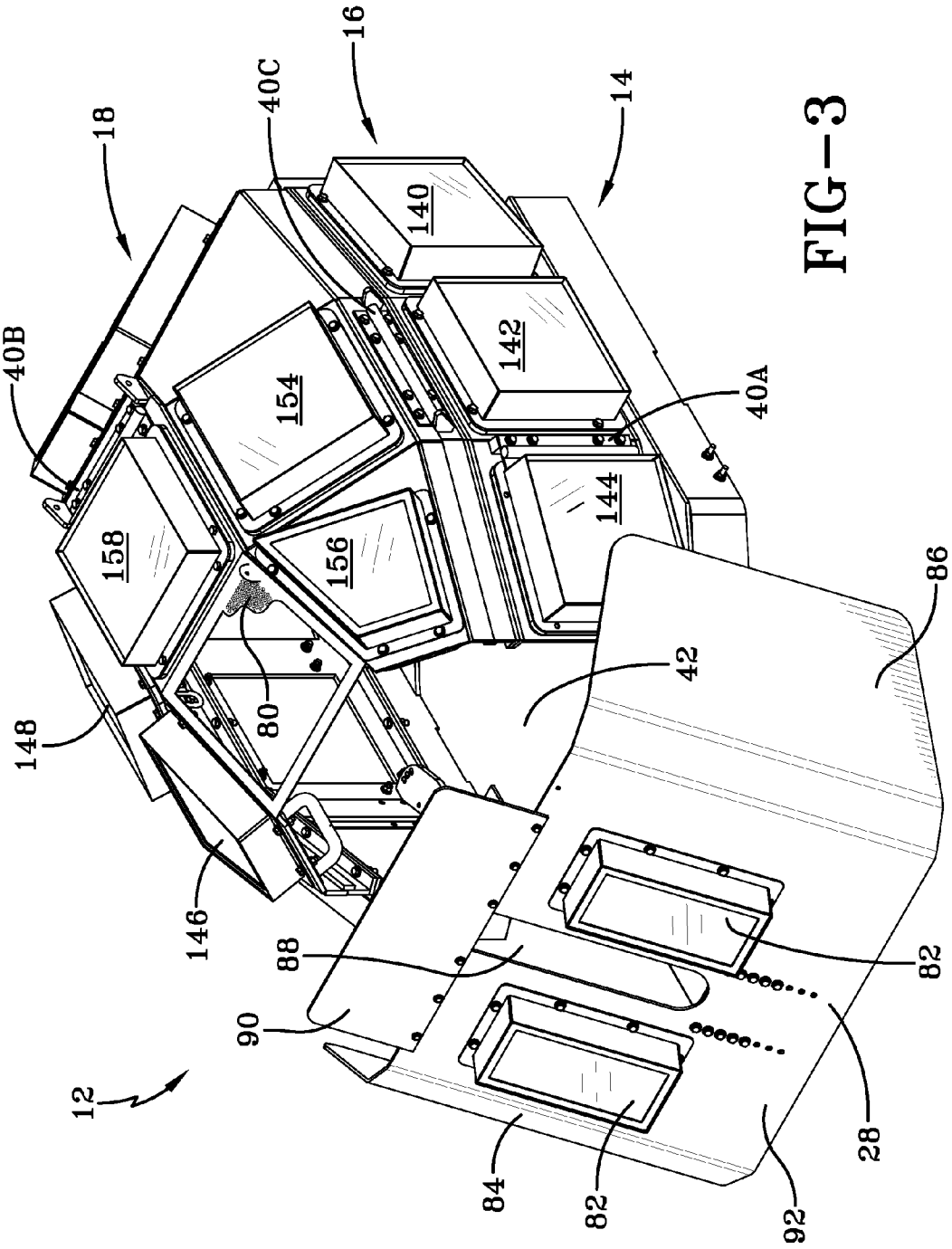
12
14
16
18
40A
40B
40C
42
28
80
82
84
86
88
90
92
140
142
144
146
148
154
156
158

FIG-3

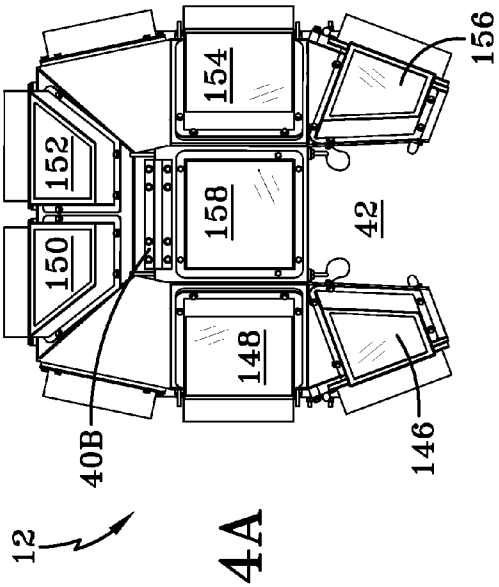

FIG-4A

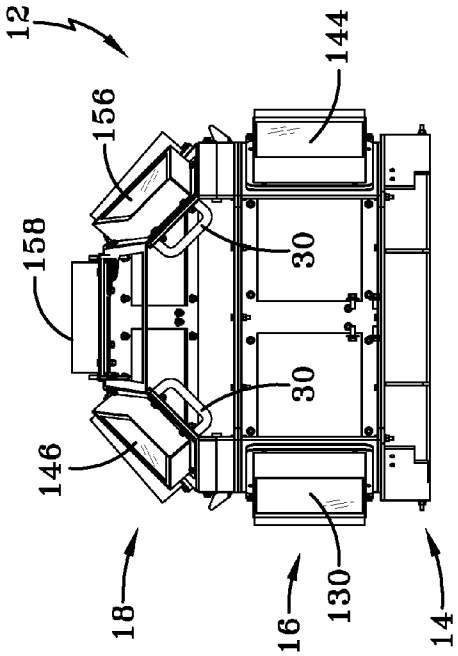

FIG-4B

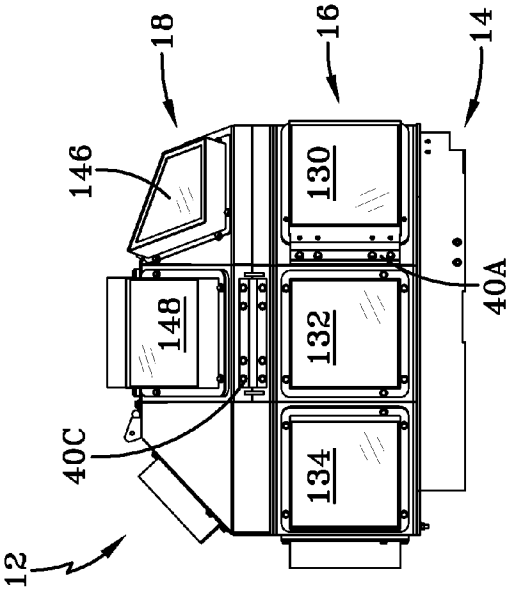

FIG-4C

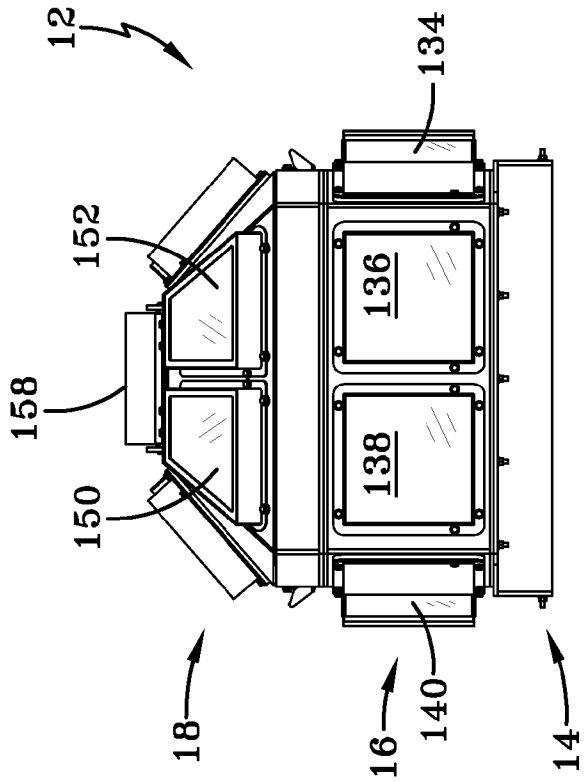
12
134
152
158
150
136
138
18
16
140
14

FIG-4E

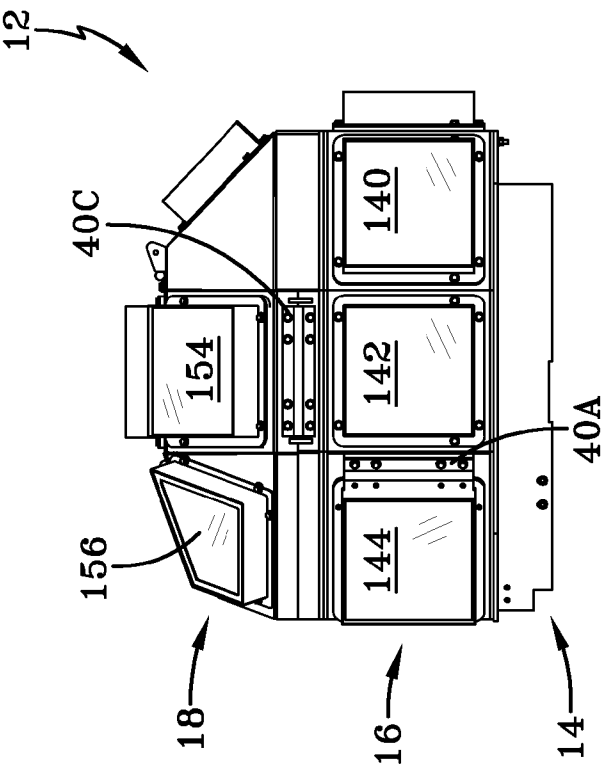
12
40C
154
156
140
142
144
40A
18
16
14

FIG-4D

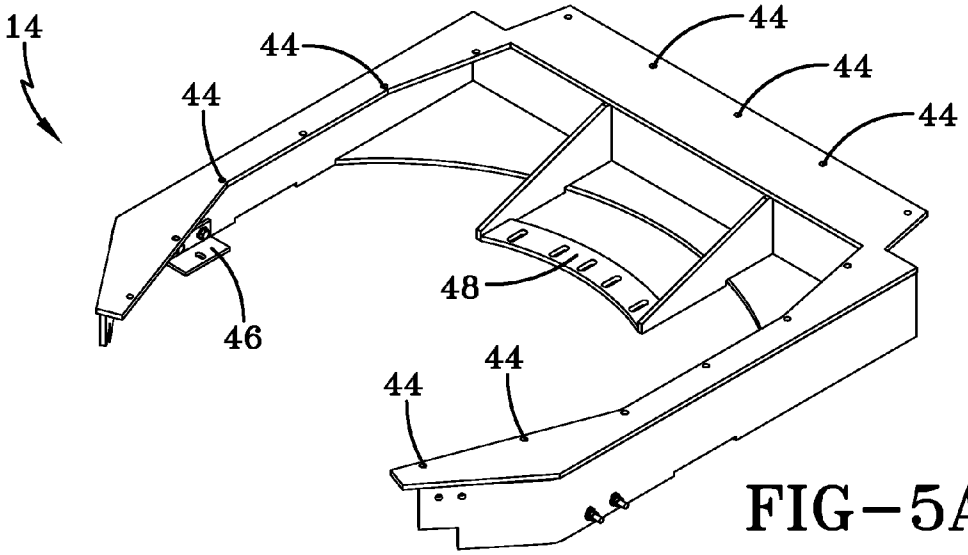
14
44
44
44
44
44
48
46
44
44

FIG–5A

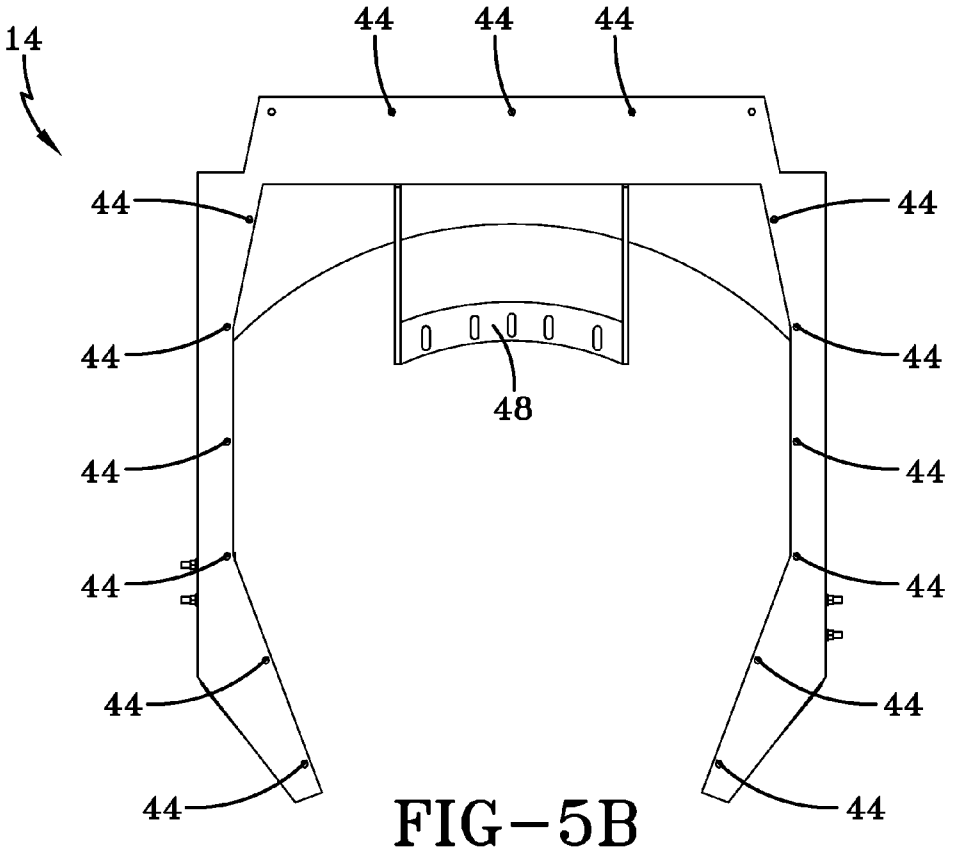
14
44
44
44
44
44
44
48
44
44
44
44
44
44
44
44

FIG–5B

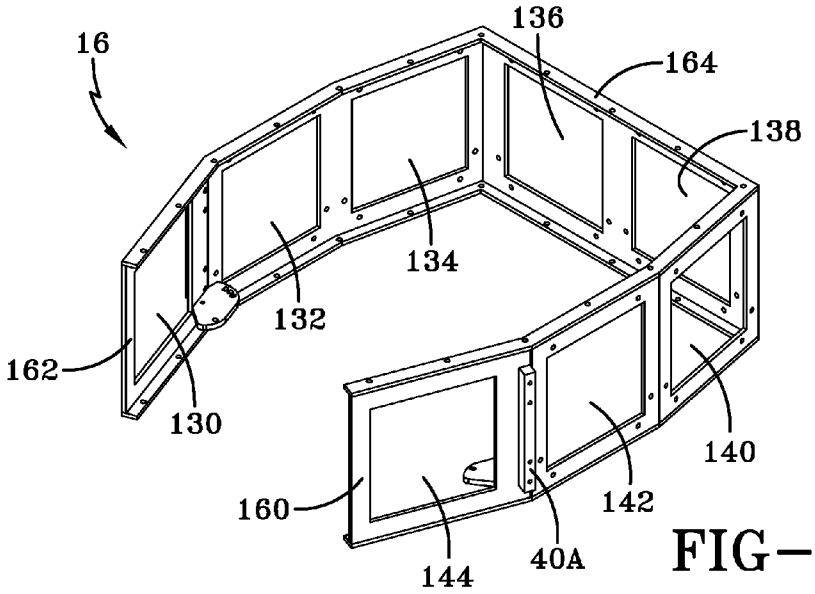

FIG–6A

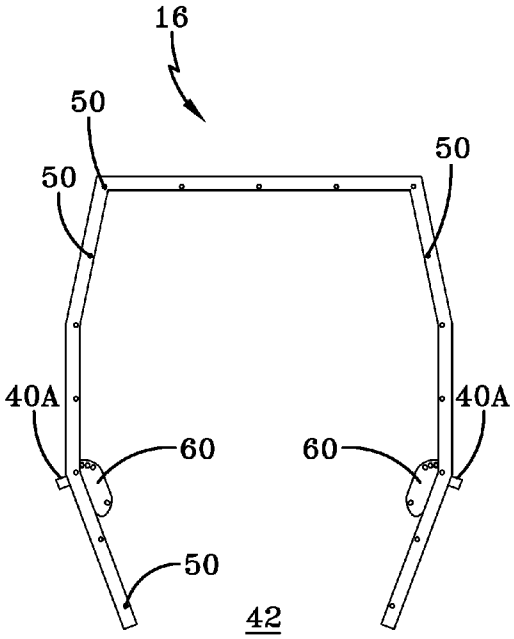

FIG–6B

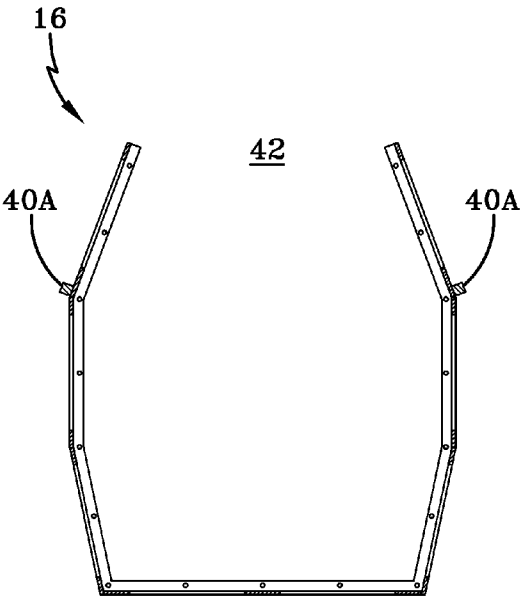

FIG–6C

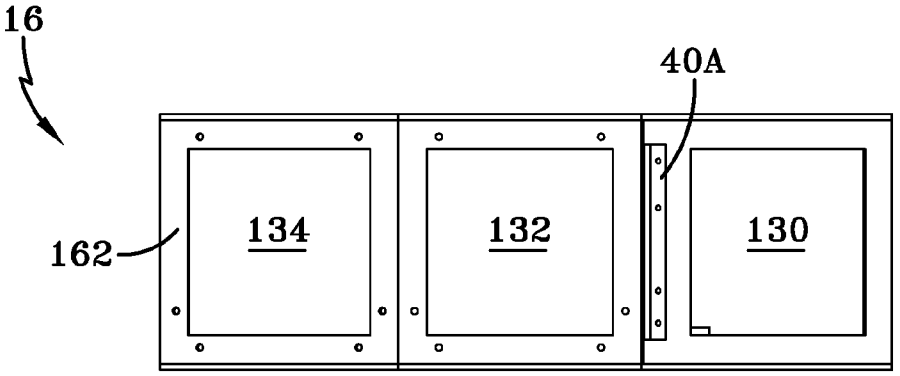

FIG–6D

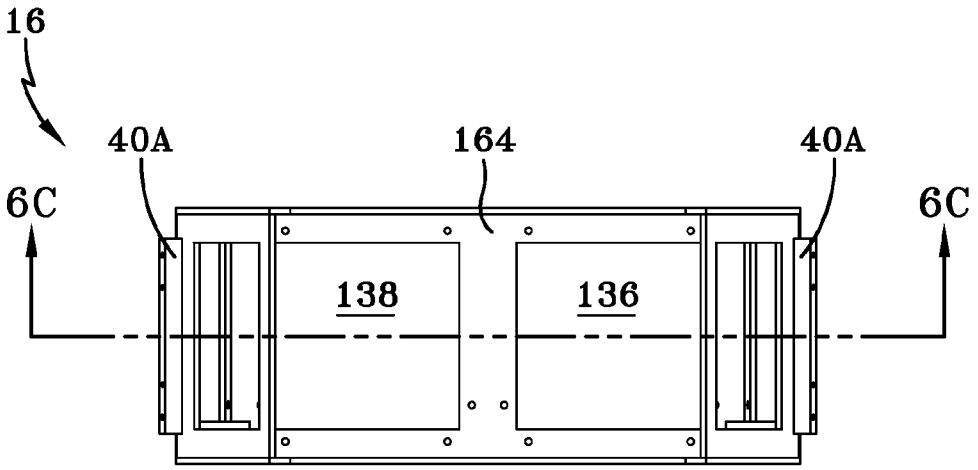

FIG–6E

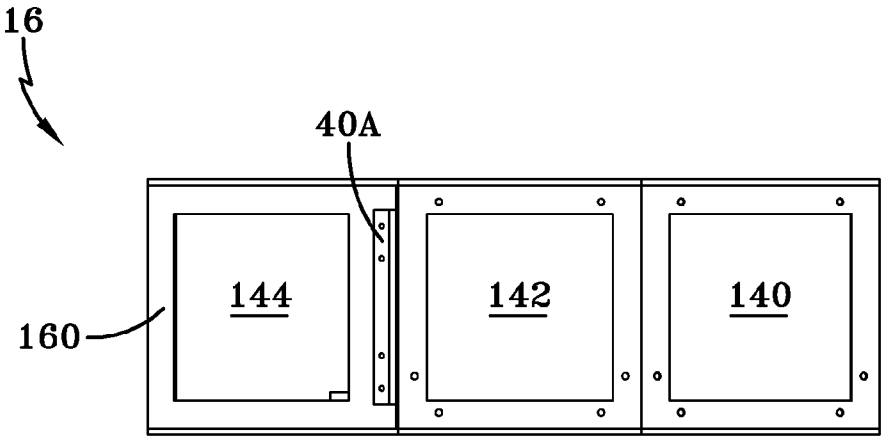

FIG–6F

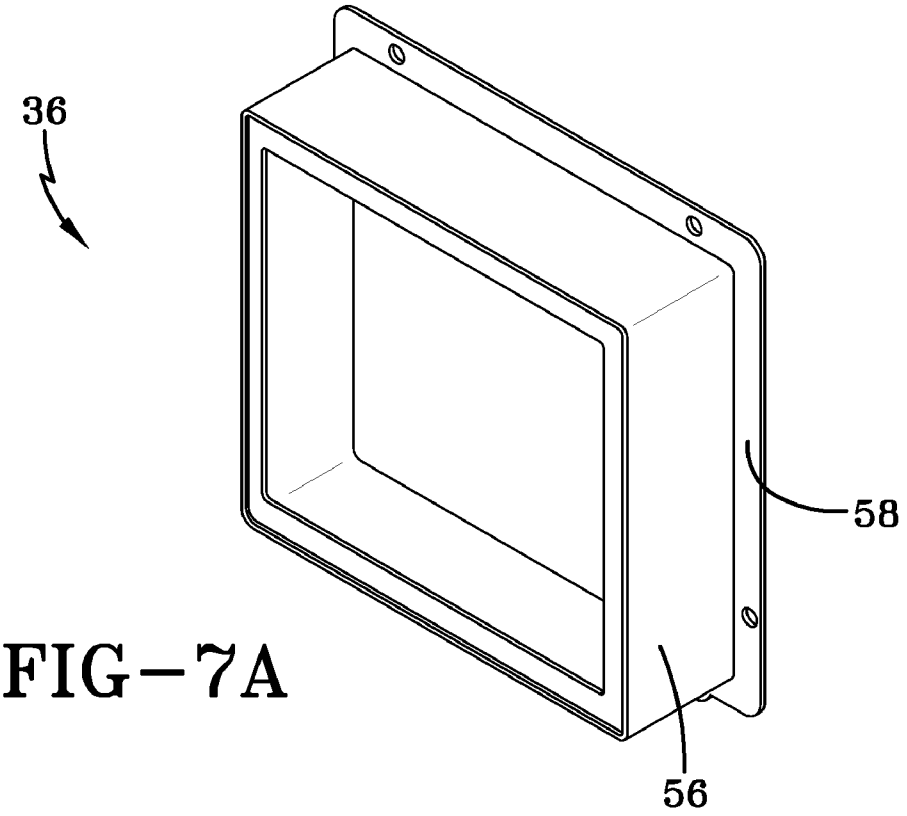

FIG-7A

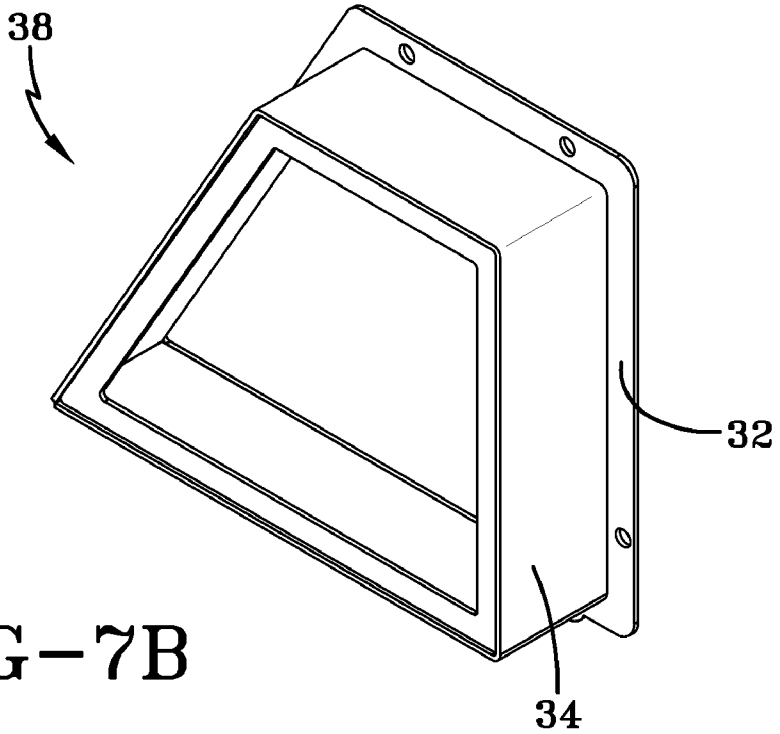

FIG-7B

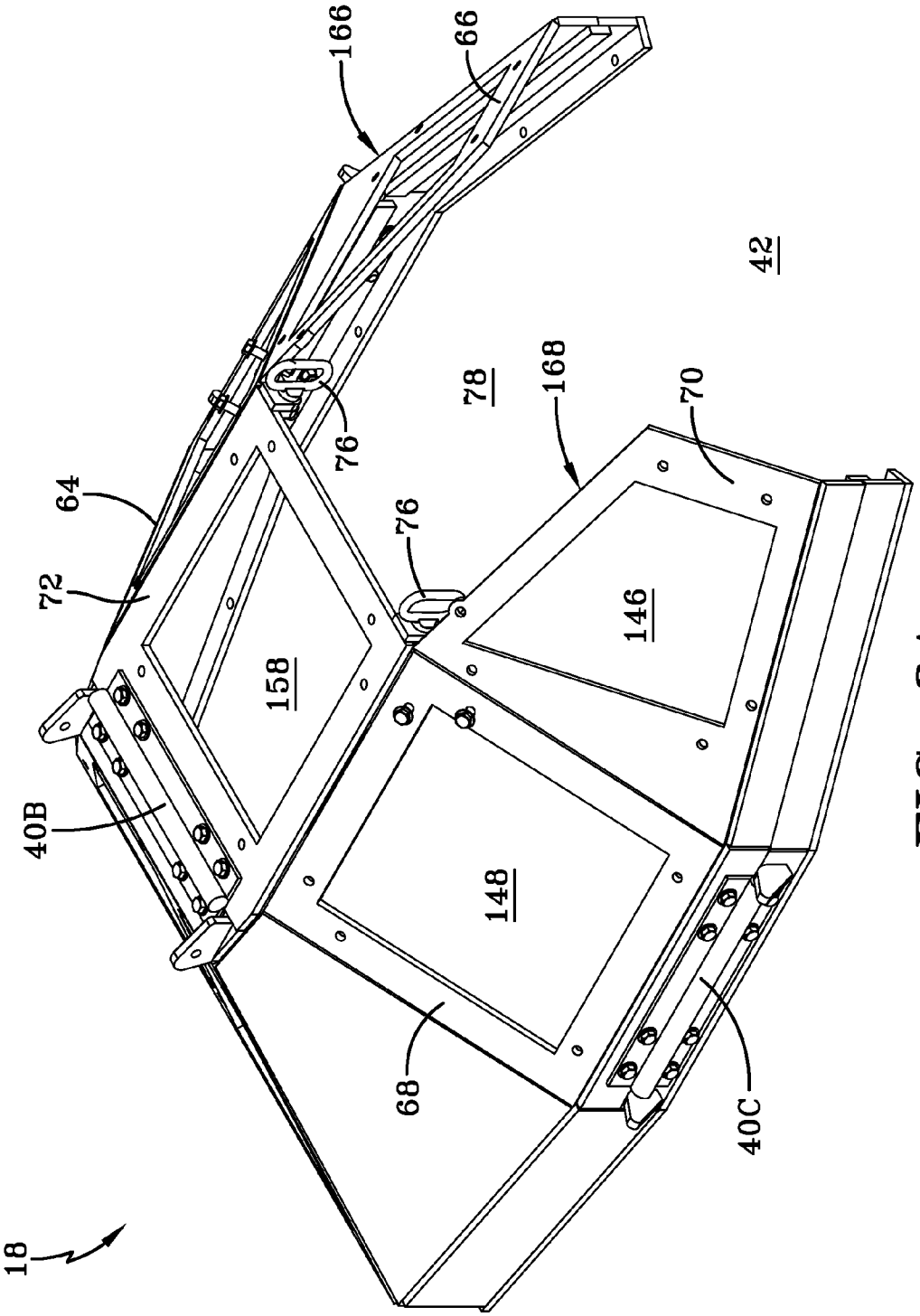

FIG-8A

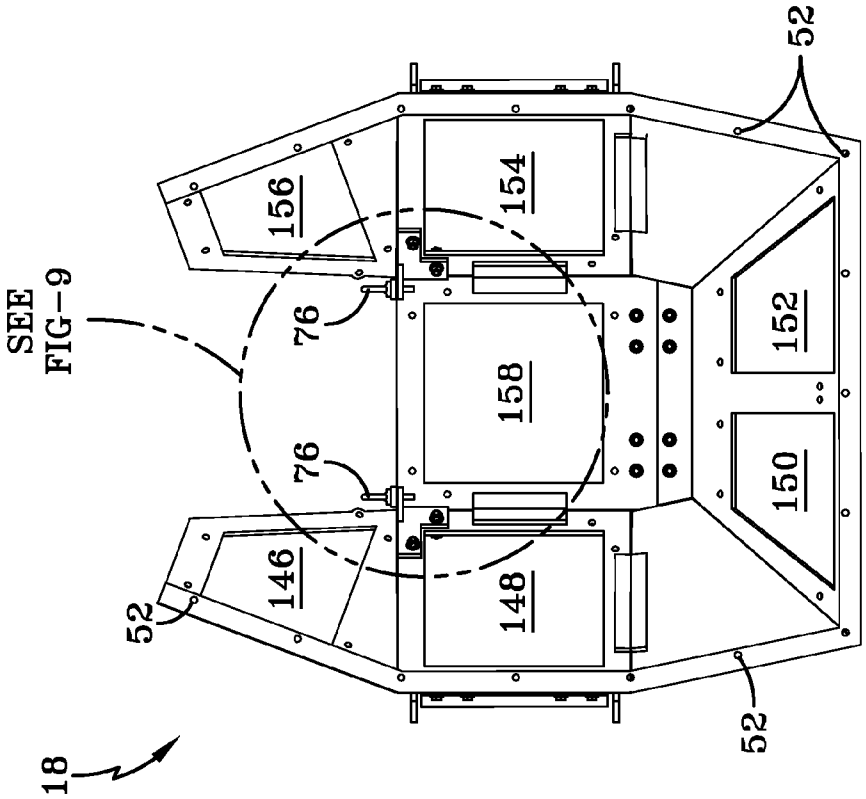
SEE
FIG-9
52
156
154
76
158
152
150
76
146
148
52
52
18

FIG-8C

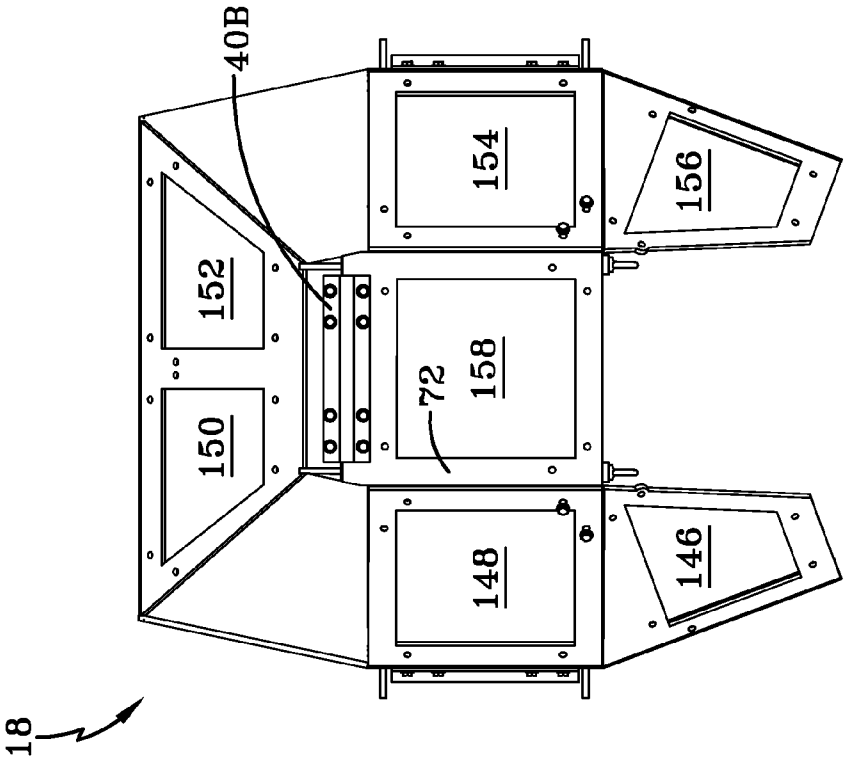
40B
154
156
152
158
72
150
148
146
18

FIG-8B

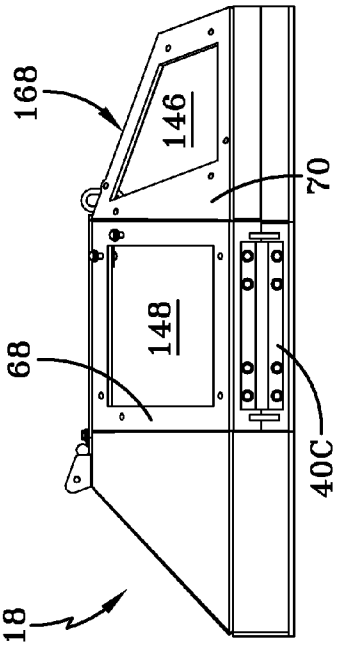

FIG-8D

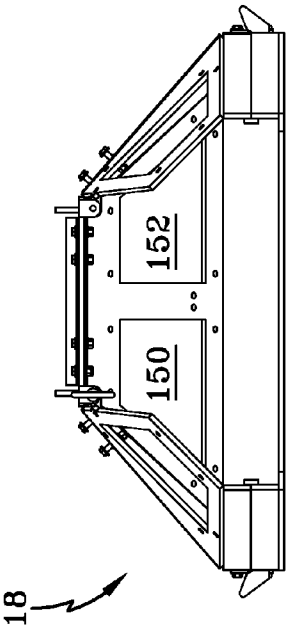

FIG-8E

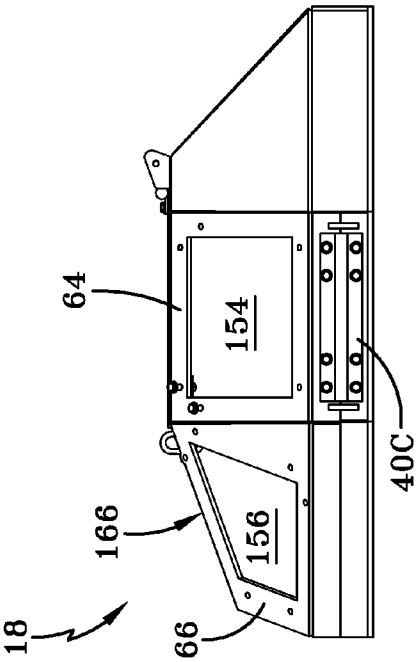

FIG-8F

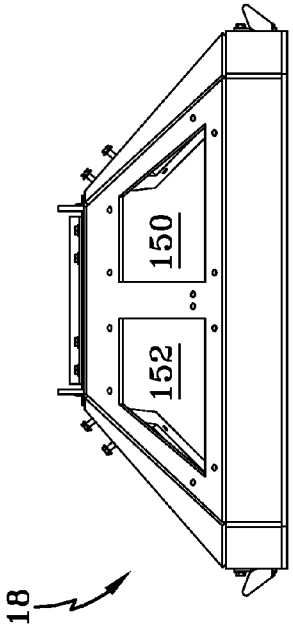

FIG-8G

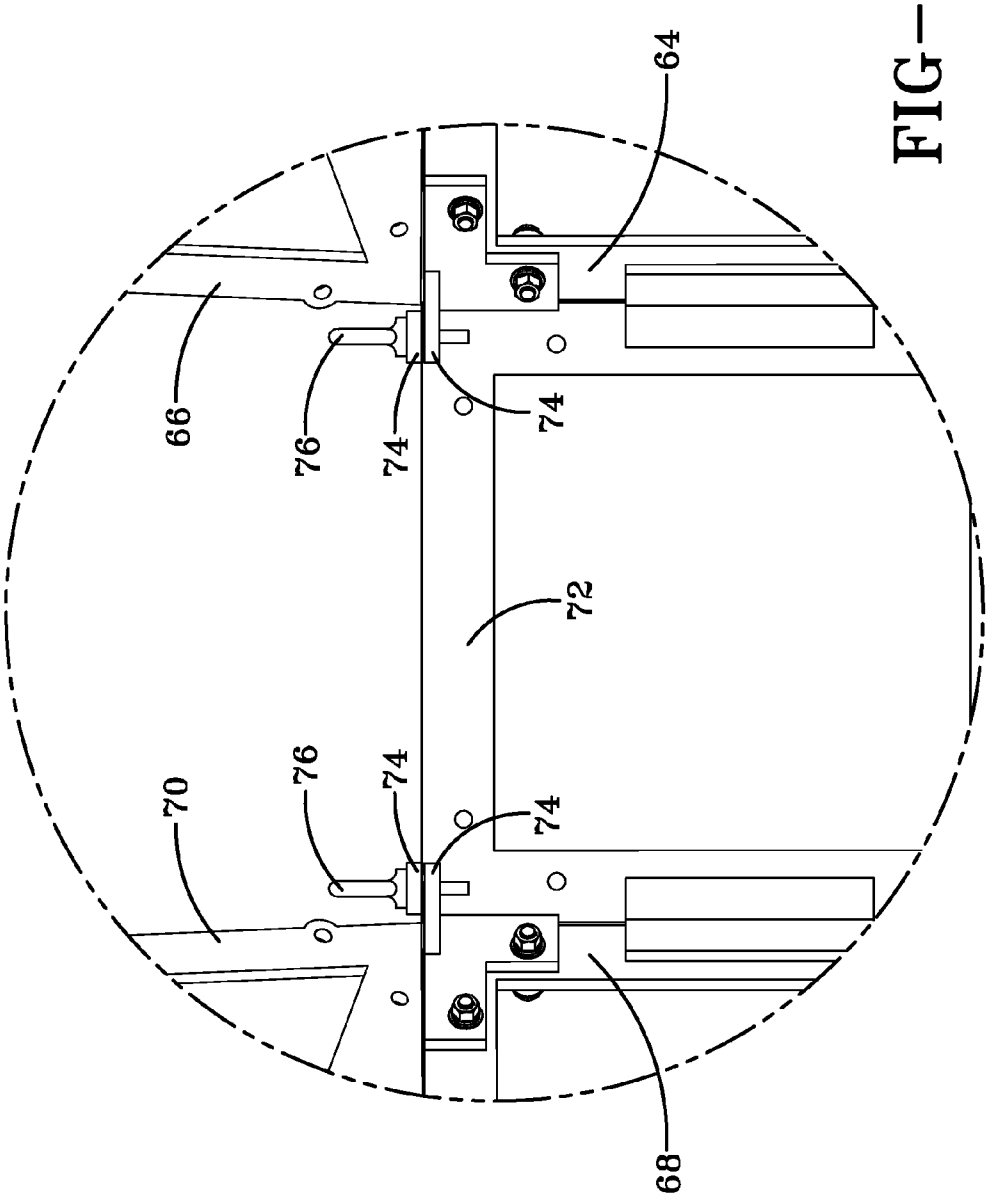

FIG—9

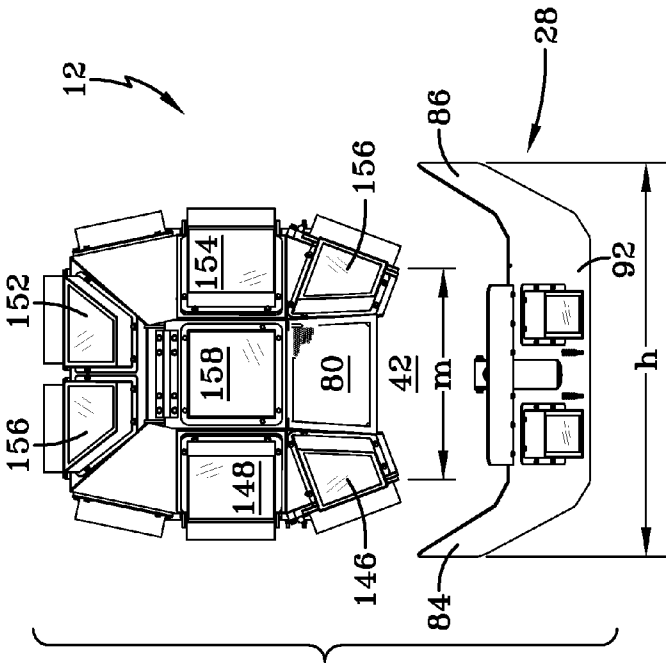

FIG-10B

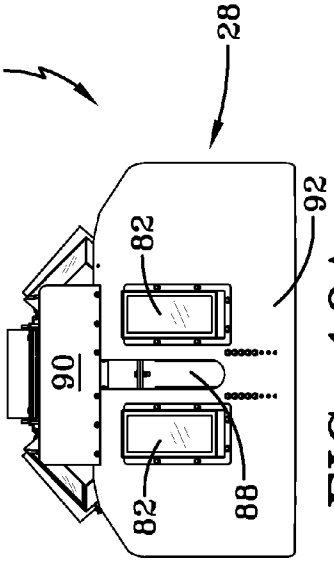

FIG-10A

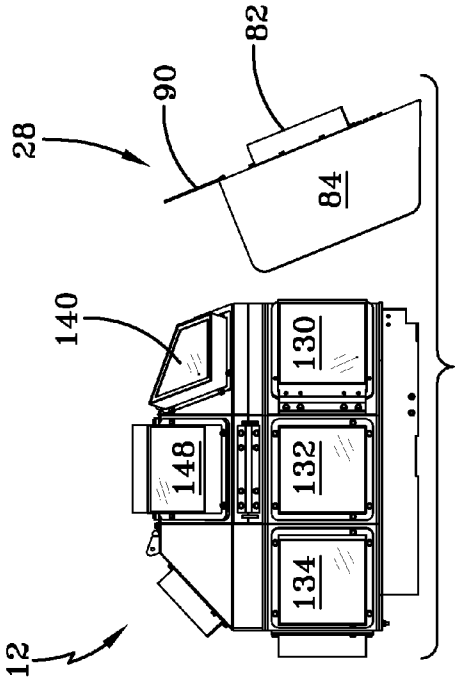

FIG-10C

VEHICLE PROTECTIVE STRUCTURE

CROSS-REFERENCE TO RELATED APPLICATION

This application is a continuation of U.S. patent application Ser. No. 11/998,977, filed Nov. 10, 2007, now U.S. Pat. No. 7,823,498 the disclosure of which is expressly incorporated by reference herein.

STATEMENT REGARDING FEDERALLY SPONSORED RESEARCH OR DEVELOPMENT

The invention described herein was made in the performance of official duties by employees of the Department of the Navy and may be manufactured, used, licensed by or for the United States Government for any governmental purpose without payment of any royalties thereon.

FIELD OF THE INVENTION

The invention generally relates to protective structures. In particular, the invention relates to protective structures used for protection against projectiles.

BACKGROUND OF THE INVENTION

The invention relates to protective structures. There is a significant need for the invention as there are no protective structures available or known which provide the features and benefits of the invention.

SUMMARY OF THE INVENTION

The invention relates to protective structures. The invention relates to protective structures adapted to protect against projective weapons or fragments that in one embodiment is mounted to a vehicle to enclose at least part of an area that a weapons or apparatus operator occupies. Embodiments of the invention have an upper portion which has protective overhead segments that can be locked and positioned such that an occupant of the protective structure have overhead protection as well as the ability to exit from the protective structure by positioning the segments to permit exit or entry from the top area of the protective structure. The structure has a latching mechanism for at least two of the overhead protective segments which are adapted to withstand an impact from projectiles or fragments from bomb blasts. The protective structure has ballistic window placed around the structure, including the overhead protective segments which permit viewing through the windows and protection against expected projectiles or fragments.

BRIEF DESCRIPTION OF THE DRAWING

In the drawings, which are not necessarily to scale, like or corresponding parts are denoted by like or corresponding reference numerals.

FIG. **1** is a side view of a vehicle with an embodiment of the invention mounted thereon;

FIG. **2** is a top view of the vehicle of FIG. **1** without the an embodiment of the invention mounted thereon;

FIG. **3** is a perspective view of one embodiment of a vehicle protective structure;

FIGS. **4**A, **4**B, **4**C **4**D and **4**E are top, front, curb side, driver side and rear views, respectively, of the structure of FIG. **3**, without the shield;

FIGS. **5**A and **5**B are perspective and top views, respectively, of an embodiment of a first portion of a vehicle protective structure;

FIGS. **6**A, B, C, D, E and F are perspective, top, sectional, curb side, rear and driver side views of an embodiment of a second portion of a vehicle protective structure. FIG. **6**C is a sectional view along the line **6**C-**6**C of FIG. **6**E;

FIGS. **7**A and **7**B are perspective views of one type of ballistic windows;

FIGS. **8**A, B, C, D, E, F, and G are perspective, top, bottom, curb side, front, driver side, and rear views, respectively, of an embodiment of an third portion of a vehicle protective structure;

FIG. **9** is an enlarged view of a portion of FIG. **8**C; and

FIGS. **10**A, **10**B, and **10**C are front, top and curb side views, respectively, of FIG. **3**.

DETAILED DESCRIPTION OF THE PREFERRED EMBODIMENTS

FIG. **1** is a side view of a vehicle **10** with one embodiment of a vehicle protective structure **12** mounted thereon. FIG. **2** is a top view of the vehicle **10** of FIG. **1** without the structure **12** mounted thereon. Structure **12** includes a first (lower) portion **14**, a second (intermediate or wall) portion **16** and a third (upper) portion **18**. The first portion **14** is fixed to a turret (traversal portion) **22** (FIG. **2**) on an upper section **15** of the vehicle **10** and disposed around an opening **24** (FIG. **2**). More particularly, the upper section **15** defines a plane **17** through which the opening **24** extends. The turret **22** is configured for rotation about a rotational axis **19** extending through the opening **24** substantially perpendicular to the plane **17**. The second portion **16** is fixed to the first portion **14** and includes a plurality of windows disposed substantially vertically around the opening **24**. As further detailed herein, the second portion **16** at least partially encloses a perimeter of a space extending generally above the opening **24**.

Windows used in these embodiments of the invention are ballistic windows. Ballistic windows are components that are capable of stopping bullets or projectiles, including bomb or explosive fragments, fired at it and can be made of impact resistant materials including materials known as bullet-resistant glass or ballistic windows. The term "bullet" is meant to be used broadly in this case referring to ballistic or high velocity projectiles or weapons, including fragmentary devices and explosives or explosively formed projectiles, which are fired at or in the direction of the window(s) in question. Bullet-resistant glass is frequently constructed using a strong but transparent material such as polycarbonate thermoplastic or by using layers of laminated glass. One desired result is a material with an appearance and light-transmitting behavior of standard glass but offers varying degrees of protection from projectile weapons depending on the weight, configuration and weight requirements or limitations. A polycarbonate layer, including products such as Cyrolon®, Lexan® and Tuffak®, is sometimes sandwiched between layers of regular glass. The use of plastic in the laminate provides impact-resistance, such as physical assault with a hammer, an axe, etc. The plastic provides little in the way of bullet-resistance. The glass, which is much harder than plastic, flattens the bullet and thereby prevents penetration. Ballistic windows, ballistic glass, impact resistant glass or bullet-resistant glass can be 70-75 mm (2.8-3.0 in) thick, but could be more or less depending on the threat or weapons the windows are designed to defeat. Bullet-resistant glass includes glass constructed of laminated glass layers built from glass sheets bonded together with polyvinyl butyral or

polyurethane. The glass can include one-way bullet-resistant glass as well as newer types of bullet-resistant glass or transparent materials such as aluminum oxynitride used as the outside "strike plate" layer.

The third portion **18** is fixed to the second portion **16** and extends upwardly and inwardly from the second portion **16** over the opening **24**. The third portion **18** includes a plurality of windows. A shield **28** may be disposed in front of the first, second and third portions **14**, **16**, **18**. In the case of armed conflict, foreign internal defensive operations or riot control engagements, structure **12** can protect a weapons operator or gunner **26** (FIG. **1**) who operates a weapon, illustratively a gun **20** or other device such as a water cannon, high intensity laser or other anti-personnel or non-lethal personnel weapon system. The gunner or protective structure occupant **26** is located in the opening **24**. However, structure **12** can protect individuals other than a gunner **26**, for example, an observer. Structure **12** can also be used to protect or mount a sensor system or other items of equipment requiring protection and impact resistant windows standing alone or in combination with a weapons system or other anti-personnel or riot control system.

FIG. **3** is a perspective view of the vehicle protective structure **12** without the vehicle **10**. FIGS. **4**A, **4**B, **4**C **4**D and **4**E are top, front, curb side, driver side and rear views, respectively, of the structure **12** of FIG. **3**, without the shield **28**. As best seen in FIGS. **3** and **4**A, the first, second and third portions **14**, **16**, **18** define a front opening **42**. The gun **20** (FIG. **1**) is disposed in the front opening **42** and the shield **28** (FIG. **3**) is mounted adjacent the front opening **42**.

In the embodiment shown in FIGS. **4**A-**4**E, second portion **16** includes windows **130**, **132**, **134**, **136**, **138**, **140**, **142**, **144**. Window **130** is the front curb side window; window **132** is the second curb side window; window **134** is the rear curb side window; window **136** is the right rear window; window **138** is the left rear window; window **140** is the rear driver side window, window **142** is the second driver side window; and window **144** is the front driver side window.

The windows **130**, **132**, **134**, **136**, **138**, **140**, **142**, **144** of the second portion **16** are substantially planar (not curved) and may be rectangular in shape. Second portion **16** may have eight windows as shown, but more or fewer windows may be used.

The eight windows **130**, **132**, **134**, **136**, **138**, **140**, **142**, **144** may be the same size and, additionally, may be the same type of window (i.e., interchangeable) as the windows **36** in the doors of the vehicle **10** of FIG. **1**. "Same type" of window means the windows have substantially the same size and shape and are interchangeable without any modifications. One or more of the windows **130**, **132**, **134**, **136**, **138**, **140**, **142** and **144** may be hinged. In FIGS. **4**A-**4**E, the front driver side and curb side windows **144**, **130** are shown mounted with hinges **40**A to the second portion **16**. Hinges **40**A allow windows **144**, **130** to rotate outward and rearward.

Third portion **18** may have seven windows **146**, **148**, **150**, **152**, **154**, **156**, **158** as shown, but more or fewer windows may be used. Window **146** is the front curb side window; window **148** is the rear curb side window; window **150** is the right rear window; window **152** is the left rear window; window **154** is the rear driver side window; window **156** is the front driver side window; and window **158** is the top window. Windows **146**, **148**, **150**, **152**, **154**, **156** and **158** may be substantially planar.

The windows **148**, **158**, **154** may be the same type of window (i.e., interchangeable) as the windows **130**, **132**, **134**, **136**, **138**, **140**, **142**, **144** of the second portion **16** and the windows **36** of the vehicle doors. Windows **148**, **158** and **154** may be rectangular. Windows **146**, **150**, **152**, **156** may be trapezoidal in shape and be the same type of window (i.e., interchangeable) as the window **38** in the door of vehicle **10** (FIG. **1**). Top window **158** (FIG. **4**A) may be mounted with a hinge **40**B so that window **158** may rotate upwardly and rearwardly.

Front and rear driver side windows **156**, **154** (FIG. **4**C) may be mounted to the second portion **16** as a single unit using hinge **40**C. Thus, front and rear driver side windows **156**, **154** may rotate outwardly and downwardly as a single unit. Front and rear curb side windows **146**, **148** (FIG. **4**D) may be similarly mounted using a hinge **40**C to thereby rotate outwardly and downwardly as a single unit. The front driver and curb side windows **156**, **146** may be the same type of window as window **38** in the door of vehicle **10** (FIG. **1**), that is, substantially trapezoidal. The rear driver and curb side windows **154**, **148** may be the same type of window as window **36** in the door of vehicle **10** (FIG. **1**), that is, substantially rectangular.

Third portion **18** may include right rear and left rear windows **150**, **152**. The two rear windows **150**, **152** may be the same type of window as window **38** in the door of vehicle **10** (FIG. **1**), that is, substantially trapezoidal.

FIGS. **5**A and **5**B are perspective and top views, respectively, of one embodiment of a first portion **14** of the vehicle protective structure **12**. The bolt holes **44** in the first portion **14** form a pattern that may be the same pattern as the bolt hole pattern in both the second portion **16** (FIG. **6**B) and the third portion **18** (FIG. **8**C). First portion **14** includes a pair of mounting brackets **46** and a rear bolt weldment **48** for fixing the first portion **14** to a vehicle, such as vehicle **10**.

FIGS. **6**A, B, C, D, E and F are perspective, top, sectional, curb side, rear and driver side views of an embodiment of a second portion **16** of a vehicle protective structure **12**. FIG. **6**C is a sectional view along the line **6**C-**6**C of FIG. **6**E. The windows **130**, **132**, **134**, **136**, **138**, **140**, **142**, **144** of the second portion **16** are not shown in FIGS. **6**A-**6**F. However, the window openings in second portion **16** for windows **130**, **132**, **134**, **136**, **138**, **140**, **142** and **144** are labeled with the corresponding window reference numeral for clarity.

Referring to FIGS. **6**A and **6**F, the front driver side window **144**, the second driver side window **142**, and the rear driver side window **140** are mounted to a first side frame **160**. Referring to FIGS. **6**A and **6**D, the front curb side window **130**, the second curb side window **132**, and the rear curb side window **134** are mounted to a second side frame **162**. The rear windows **136** and **138** are mounted to an end frame **164**, wherein the end frame **164** is connected between the first side frame **160** and the second side frame **162**.

The gun **20** (FIG. **1**) fits in front opening **42** (FIG. **6**A, B, C). Front opening **42** provides for about 60 degrees of horizontal gun rotation, that is, about 30 degrees each side of the center position. Thus, the first, second and third portions **14**, **16**, **18** provide about 300 degrees of protective to the gunner. The pattern of the bolt holes **50** (FIG. **6**B) may be the same as the pattern of the bolt holes **44** in the first portion **14** (FIG. **5**A) and the pattern of the bolt holes **52** in the third portion **18** (FIG. **8**C).

FIG. **7**A shows a rectangular ballistic window **36** (see also FIG. **1**) that includes a frame **56** and a flange **58**. Windows **36** may be used for windows **130**, **132**, **134**, **136**, **138**, **140**, **142**, **144** of the second portion **16**. Flange **58** may be bolted to second portion **16** so that each window is positioned in a corresponding window opening. The front driver side and front curb side windows **144**, **130** (see also FIGS. **4**D and **4**C), rather than being bolted to the second portion **16**, may be mounted on a hinge **40**A. A manually operated opening and

closing device **60** (FIG. **6**B) (details not shown) may be provided for rotating the front driver side and front curb side windows **144**, **130** outwardly. In certain embodiments, each opening and closing device **60** may include a latching device for securing the window **144**, **130** in a desired (e.g., closed) position, and a biasing device for biasing the window **144**, **130** toward an open position.

FIGS. **8**A, B, C, D, E, F, and G are perspective, top, bottom, curb side, front, driver side, and rear views, respectively, of an embodiment of a third portion **18** of a vehicle protective structure **12**. The windows **146**, **148**, **150**, **152**, **154**, **156**, **158** of the third portion **18** are not shown in FIGS. **8**A-**8**G. However, the window openings in third portion **18** for windows **146**, **148**, **150**, **152**, **154**, **156**, **158** are labeled with the corresponding window reference numeral for clarity. Ballistic window **36** of FIG. **7**A may be used for windows **148**, **158**, **154**. FIG. **7**B shows a ballistic window **38** (see also FIG. **1**) having a frame **34** and a flange **32**. Ballistic window **38** may be used for windows **150**, **152**, **156**. Flange **32** may be bolted to third portion **18** so that each window is positioned in a corresponding window opening.

Referring to FIGS. **8**F and **8**D, the front and rear driver side windows **156**, **154** and the front and rear curb side windows **146**, **148** are fixed to respective frames **66**, **64**, **70**, **68**. Frame **64** is fixed to a hinge **40**C, and frame **66** is fixed to frame **64** to define a first movable frame **166**, such that windows **156**, **154** may be rotated outwardly and downwardly as a single unit. Similarly, frame **68** is fixed to a hinge **40**C, and frame **70** is fixed to frame **68** to define a second movable frame **168**, such that windows **146**, **148** may be rotated outwardly and downwardly. Movable frames **166** and **168** are slanted (extend upwardly and inwardly from the second portion **16**) toward the opening **24** to reduce the potential for blockage by the vehicle during an accident (e.g., rollover). Additionally, movable frames **166** and **168** may each be operably coupled to a biasing device (e.g., spring) for biasing the frame **166**, **168** toward an open position to facilitate quick egress by a vehicle occupant.

Referring to FIG. **8**B, frame **72** for window **158** may be fixed to third portion **18** with a hinge **40** such that window **158** may be rotated upwardly and rearwardly. To secure top window **158**, driver side windows **156**, **154** and curb side windows **146**, **148** in a closed position, flanges or bosses **74** (FIG. **9**) are fixed to frames **72**, **68** and **64**. Frame **72** has two bosses **74** and frames **68**, **64** have one boss each. Each boss **74** includes an opening therein for receiving a quick release pin **76**. Thus, the opening in boss **74** of frame **68** is aligned with the opening in one of the bosses **74** of frame **72** and pin **76** is inserted therein. Similarly, the opening in boss **74** of frame **64** is aligned with the opening in the other of the bosses **74** of frame **72** and pin **76** is inserted therein. To rotate the top window **158** and the side windows **156**, **154** and **146**, **148**, the quick release pins **76** are removed from the openings in the bosses **74**. Pins **76** may be attached to lanyards to prevent misplacing them.

Referring to FIG. **8**A, upper opening **78** in third portion **18** may be closed with an elastic net **80** shown in FIG. **10**B.

Referring to FIG. **8**C, the pattern of the bolt holes **52** (FIG. **8**C) may be the same as the pattern of the bolt holes **44** in the first portion **14** (FIG. **5**A) and the pattern of the bolt holes **50** in the second portion **16** (FIG. **6**B). In one embodiment, the second portion **16** is fixed to the first portion **14** using threaded fasteners all having the same size head and the third portion **18** is fixed to the second portion **16** using threaded fasteners all having the same size head as the fasteners used to fix the second portion **16** to the first portion **14**. In some embodiments of the invention, the second portion **16** is not used and the third portion **18** is fixed directly to the first portion **14**. In other embodiments of the invention, the second portion **16** is fixed to the first portion **14** and the third portion **18** is not included.

Third portion **18** may include one or more handles **30** (FIGS. **4**A and **4**B).

FIGS. **10**A, **10**B, and **10**C are front, top and curb side views, respectively, of FIG. **3**. Shield **28** may be fixed to a pintle (not shown) that is used to mount the gun **20** (FIG. **1**). Shield **28** includes a front portion **92** and right and left side portions **84**, **86** that extend rearwardly from the front portion **92**. Front portion **92** includes at least one ballistic window **82** and an elongated opening or slot **88** for receiving the barrel **21** of gun **20** (FIG. **1**). The transverse extent "h" (FIG. **10**B) of the shield **28** is greater than the transverse extent "m" of the front opening **42**. Front portion **92** may include a top plate **90** that extends above the opening **88**.

Projectile resistant armor (e.g., steel) and ballistic glass may be used to fabricate vehicle protective structure **12**.

While the invention has been described with reference to certain preferred embodiments, numerous changes, alterations and modifications to the described embodiments are possible without departing from the spirit and scope of the invention as defined in the appended claims, and equivalents thereof.

What is claimed is:

1. A vehicle protective structure comprising:

a wall portion configured to be supported by a vehicle, the wall portion including a first side frame, a second side frame, and an end frame connected between the first side frame and the second side frame to at least partially enclose a perimeter, and at least one ballistic window supported within each of the first side frame, the second side frame, and the end frame, the at least on ballistic window including a front driver side window supported within the first side frame, a front curb side window supported within the second side frame, and an end window supported within the end frame, wherein at least one of the front driver side window and the front curb side window is supported for pivoting movement about a substantially vertical rotational axis; and

an upper portion supported by the wall portion, the upper portion including a first movable frame supported above the first side frame of the wall portion for pivoting movement about a substantially horizontal axis between a closed position and an open position outward from the closed position, a second movable frame supported above the second side frame of the wall portion and supported for pivoting movement about a substantially horizontal axis between a closed position and an open position outward from the closed position, and at least one ballistic window supported within each of the first movable frame and the second movable frame.

2. The vehicle protective structure of claim **1**, further comprising a traversal portion adapted to selectively rotate at least one of the wall portion and the upper portion about a rotational axis.

3. The vehicle protective structure of claim **1**, further comprising:

a lower portion positioned below the wall portion and configured to couple to a vehicle including an upper section having an opening.

4. The vehicle protective structure of claim **1**, wherein the plurality of ballistic windows in the wall portion are substantially planar, and the plurality of ballistic windows in the upper portion are substantially planar.

5. The vehicle protective structure of claim **1**, wherein the first and second movable frames of the upper portion extend upwardly and inwardly from the wall portion when in a closed position.

6. The vehicle protective structure of claim **1**, wherein the wall portion and the upper portion define a front opening, the vehicle protective structure further comprising a shield disposed adjacent the front opening.

7. The vehicle protective structure of claim **6**, wherein the shield includes an elongated opening for receiving the barrel of a weapon.

8. The vehicle protective structure of claim **7**, wherein the shield has a transverse extent that is greater than a transverse extent of the front opening of the structure, the shield including at least one window and right and left rearwardly extending side portions.

9. The vehicle protective structure of claim **1**, wherein the at least one ballistic window in the upper portion includes a front driver side window and a rear driver side window supported within the first movable frame, and a front curb side window and a rear curb side window supported within the second movable frame, the front and rear driver side windows being supported to pivot together with the first movable frame, and the front and rear curb side windows being supported to pivot together with the second movable frame.

10. The vehicle protective structure of claim **1**, further comprising:

a first latching mechanism operably coupled to the first movable frame of the upper portion to secure the first movable frame in the closed position; and

a second latching mechanism operably coupled to the second movable frame of the upper portion to secure the second movable frame in the closed position.

11. The vehicle protective structure of claim **10**, wherein:

the first movable frame of the third portion includes a boss with an opening therein;

the second movable frame of the third portion includes a boss with an opening therein;

the top frame includes a pair of bosses with openings therein;

the first latching mechanism includes a first pin first, the first pin releasably coupling the first movable frame with the top frame in a closed position, the first pin being disposed in the opening in the boss of the first movable frame and the opening in one of the bosses of the top frame; and

the second latching mechanism includes a second pin, the second pin releasably coupling the second movable frame with the top frame in a closed position, the second pin being disposed in the opening in the boss of the second movable frame and the opening in the other of the bosses of the top frame.

* * * * *