US008146476B2

(12) **United States Patent**
Schneider et al.

(10) **Patent No.: US 8,146,476 B2**
(45) **Date of Patent: Apr. 3, 2012**

(54) **VEHICLE PROTECTIVE STRUCTURE**

(75) Inventors: **John Schneider**, Huntingburg, IN (US); **Christopher Brown**, Bloomington, IN (US); **Robin Cromwell**, Mitchell, IN (US); **Donald Lowe**, San Antonio, TX (US)

(73) Assignee: **The United States of America, as represented by the Secretary of the Navy**, Washington, DC (US)

(*) Notice: Subject to any disclaimer, the term of this patent is extended or adjusted under 35 U.S.C. 154(b) by 0 days.

(21) Appl. No.: **12/547,815**

(22) Filed: **Aug. 26, 2009**

(65) **Prior Publication Data**

US 2010/0005644 A1 Jan. 14, 2010

Related U.S. Application Data

(62) Division of application No. 11/998,977, filed on Nov. 10, 2007, now Pat. No. 7,823,498.

(51) **Int. Cl.**
F41H 5/20 (2006.01)

(52) **U.S. Cl.** **89/36.08**; 89/36.13

(58) **Field of Classification Search** 89/36.08, 89/36.13, 36.14, 36.15; 109/49.5
See application file for complete search history.

(56) **References Cited**

U.S. PATENT DOCUMENTS

1,928,306	A *	9/1933	Brennan	89/36.08
2,388,873	A	11/1945	Schwab	
2,436,374	A	2/1948	Birdsall	
3,586,236	A	6/1971	Schaffler	
3,942,598	A	3/1976	Council	
4,358,984	A	11/1982	Winblad	
4,715,263	A	12/1987	Kramer	
4,934,246	A	6/1990	Benson et al.	
5,815,302	A	9/1998	McVey et al.	
5,942,716	A	8/1999	Miller	
6,302,010	B1 *	10/2001	Holler	296/187.07
6,622,607	B1	9/2003	Miller	
7,325,475	B2	2/2008	Long	
D622,182	S *	8/2010	Parimi et al.	D12/12
2005/0188831	A1	9/2005	Squires	
2007/0000377	A1	1/2007	Ohnstad	
2007/0131103	A1	6/2007	McClellan	

OTHER PUBLICATIONS

Armor Holdings.Com, Improved Gunner Protection Kit with Integrated Transparent Armor (I-GPK), http://adg.armorholdings.com/pdfs/Improved%20Gunner%20Protection%20Kit.pdf, viewed Oct. 29, 2007.

(Continued)

Primary Examiner — Stephen M Johnson
(74) *Attorney, Agent, or Firm* — Christopher A. Monsey

(57) **ABSTRACT**

A protective structure for a vehicle having an opening on an upper surface is provided. One embodiment of the invention has at least a partial enclosure around an area defined laterally by the vehicle opening with an overhead and side protective capability. An embodiment of the invention has an overhead cover that is formed to substantially enclose a top area of the enclosure and having multiple panels that may be locked into place or opened by an occupant for exit through a top area of the enclosure. The multiple panels in this embodiment extend upwardly and inwardly from a section of the enclosure's side walls. Ballistic windows are provided on the protective structure such that an occupant can view laterally and vertically through the enclosure and overhead cover. A shield or protective plate can be mounted on one side of the enclosure.

18 Claims, 13 Drawing Sheets

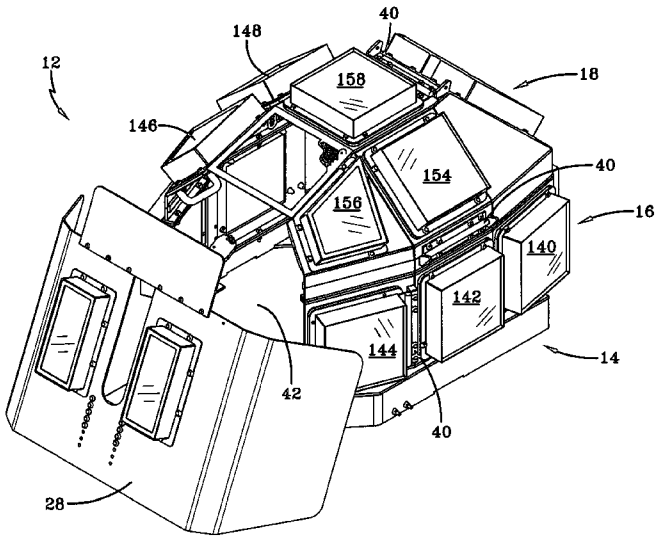

OTHER PUBLICATIONS

Picatinny Arsenal, Picatinny Designs Latest Advancement in Gunner Protection, http://www.pica.army.mil/PicatinnyPublic/warfighter/index.asp, dated Mar. 29, 2007, viewed Oct. 29, 2007.

Patrick A. Serao, U.S. Army Armament Research, Development and Engineering Center (ARDEC) Update, http://www.dtic.mil/ndia/2007armaments/Serao.pdf, Jun. 12, 2007, p. 7, viewed Oct. 29, 2007.

* cited by examiner

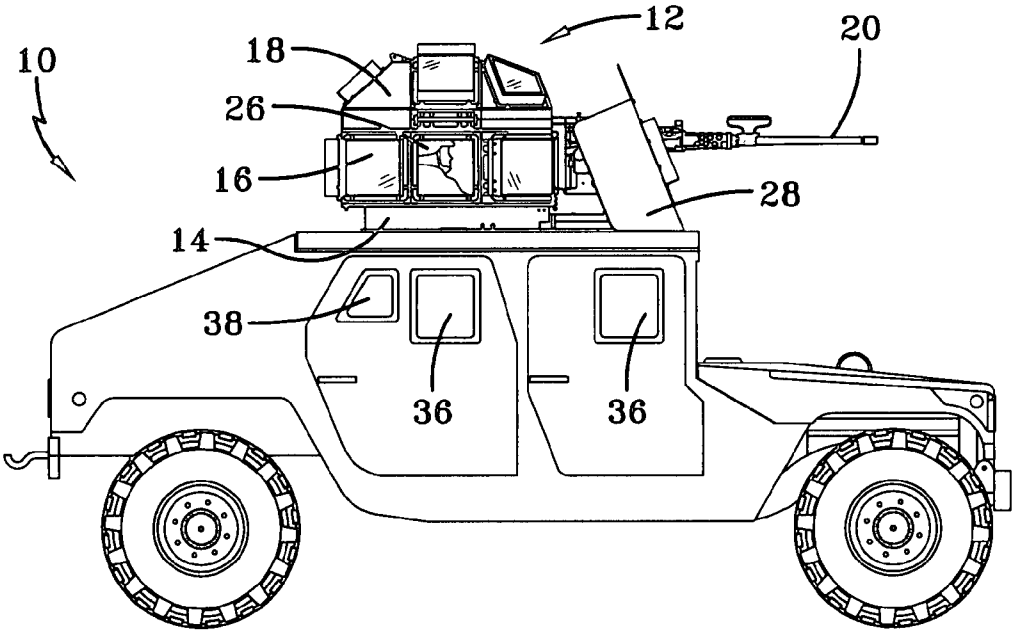

FIG-1

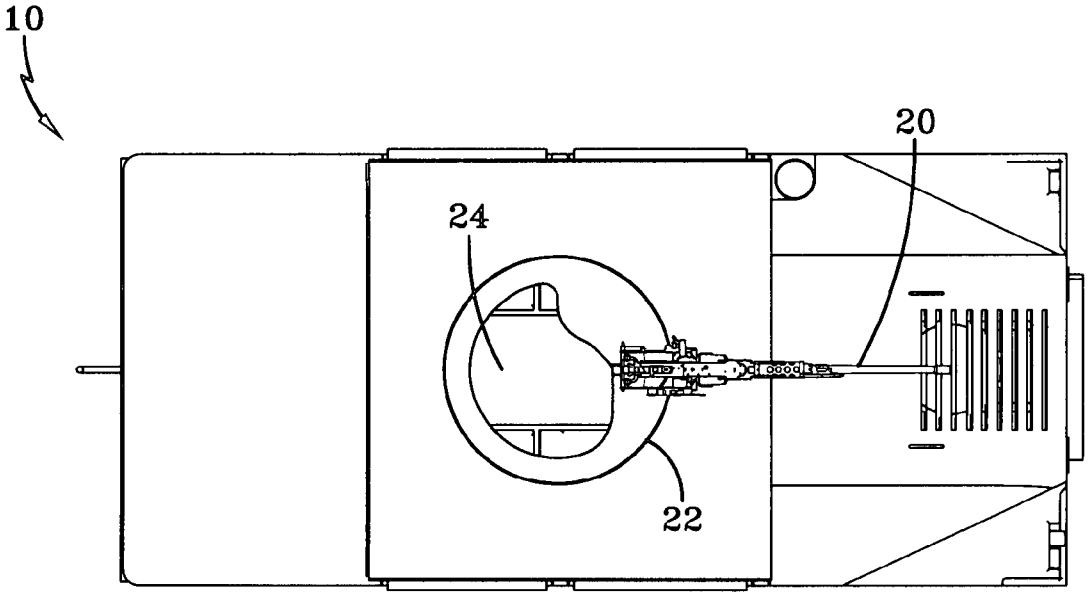

FIG-2

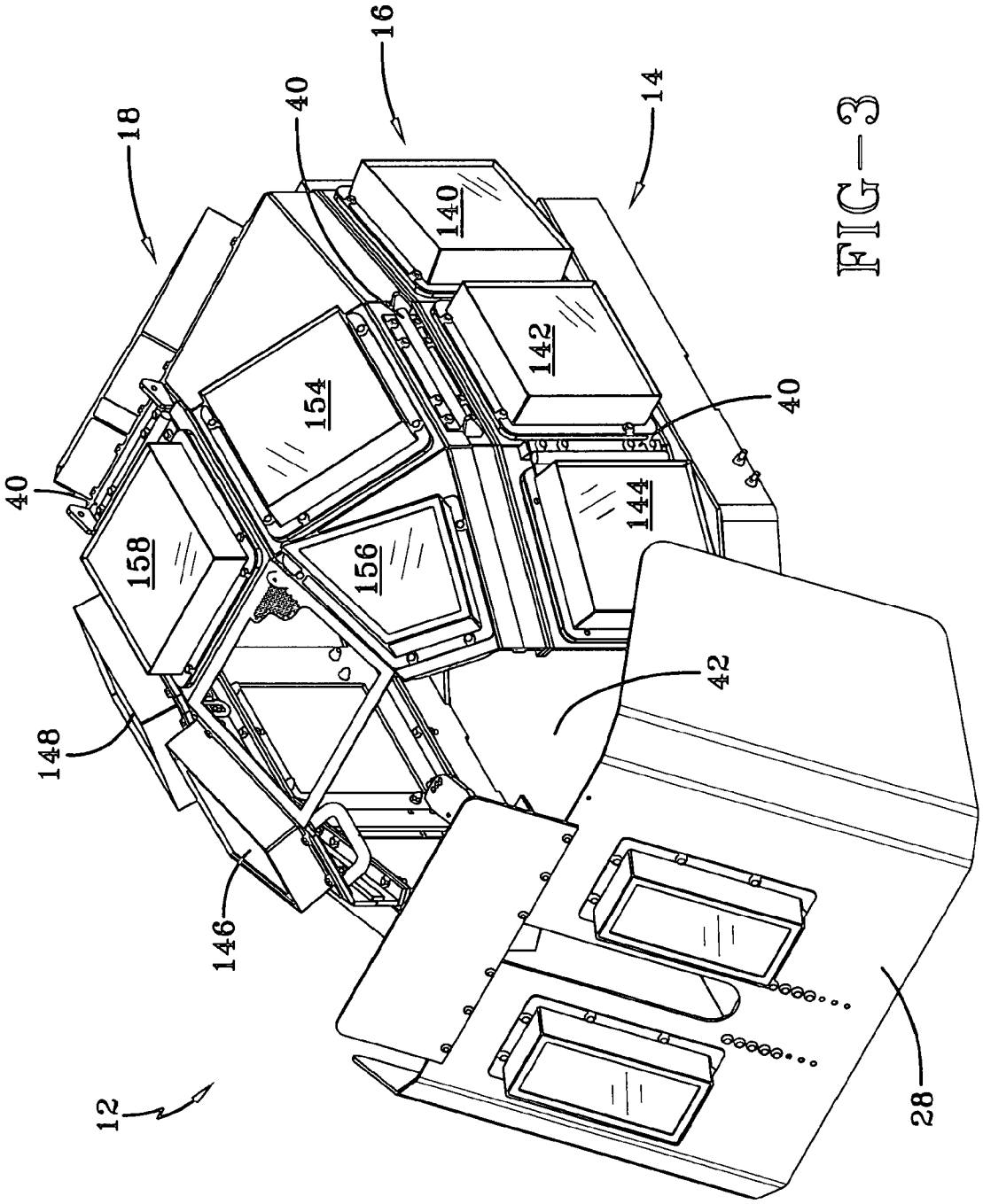

FIG—3

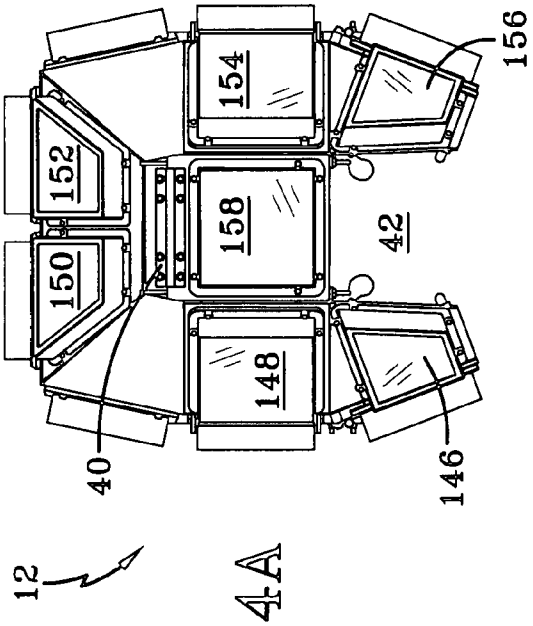

FIG-4A

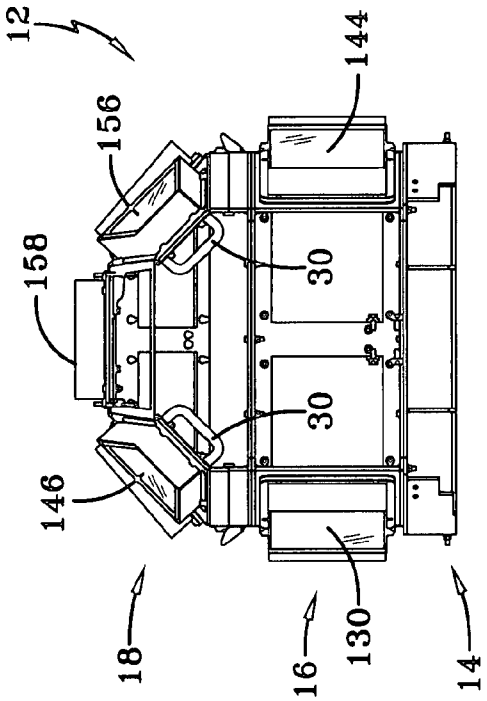

FIG-4B

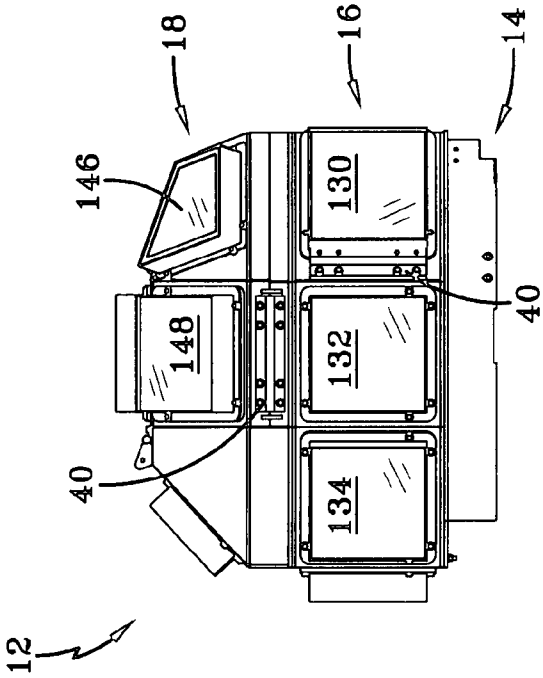

FIG-4C

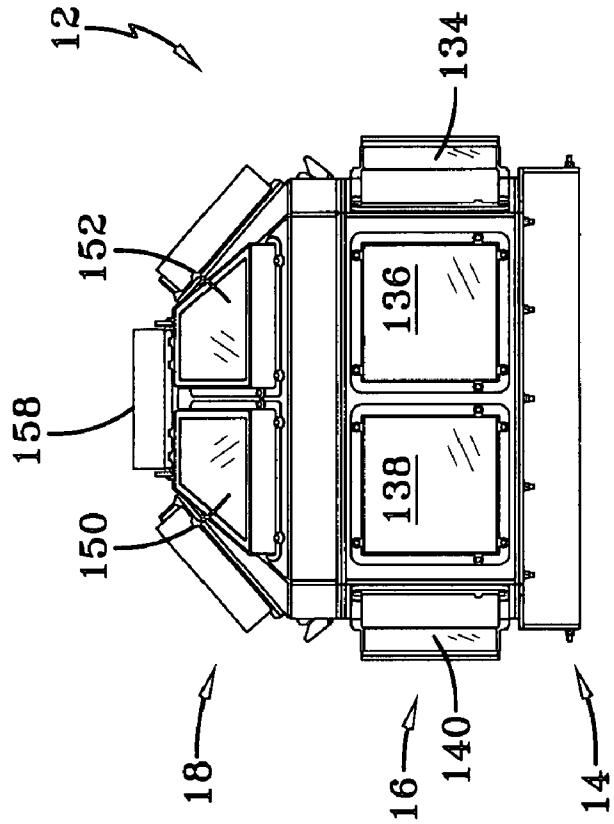
12
134
152
136
158
138
150
18
16
140
14

FIG-4E

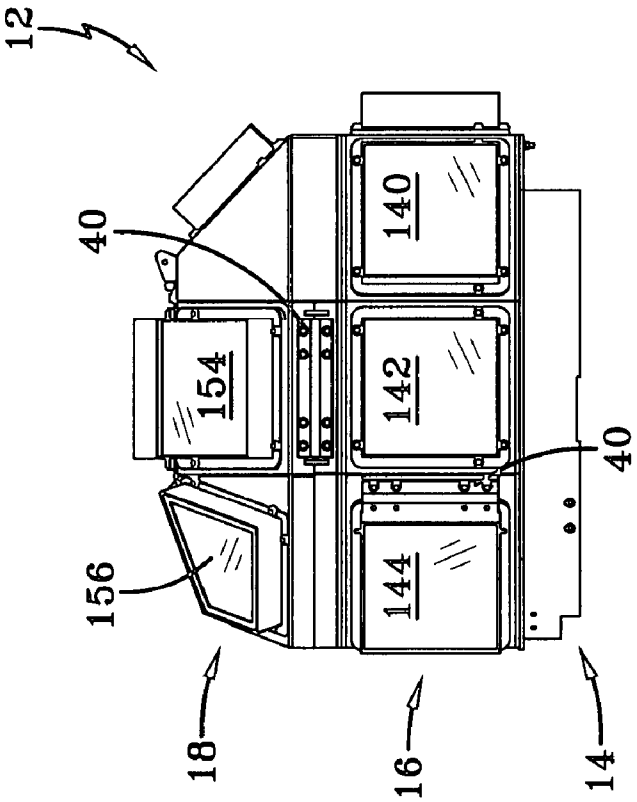
12
40
140
154
142
40
156
144
18
16
14

FIG-4D

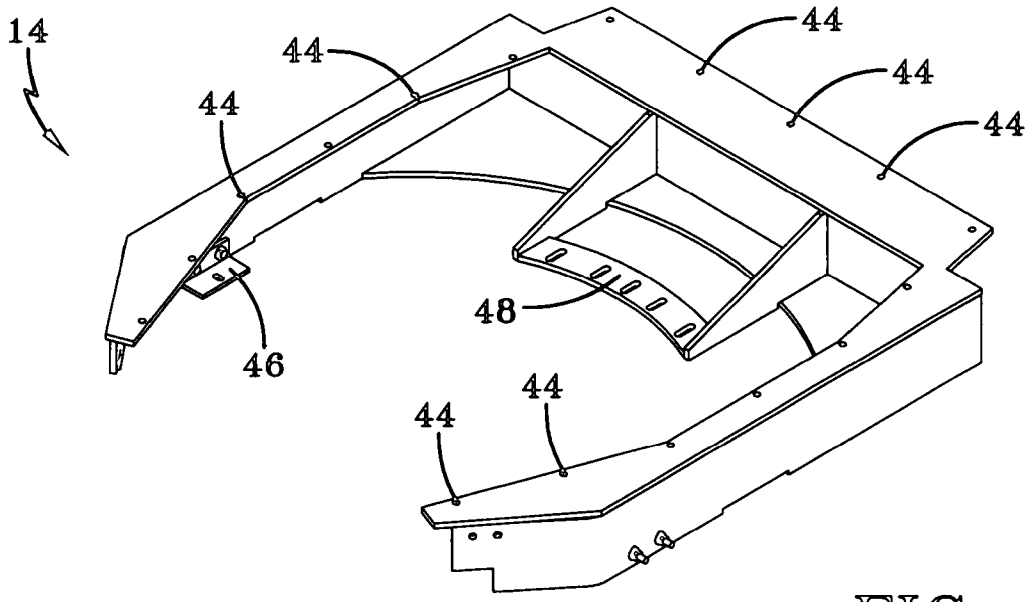
14
44
44
44
44
44
48
46
44
44

FIG-5A

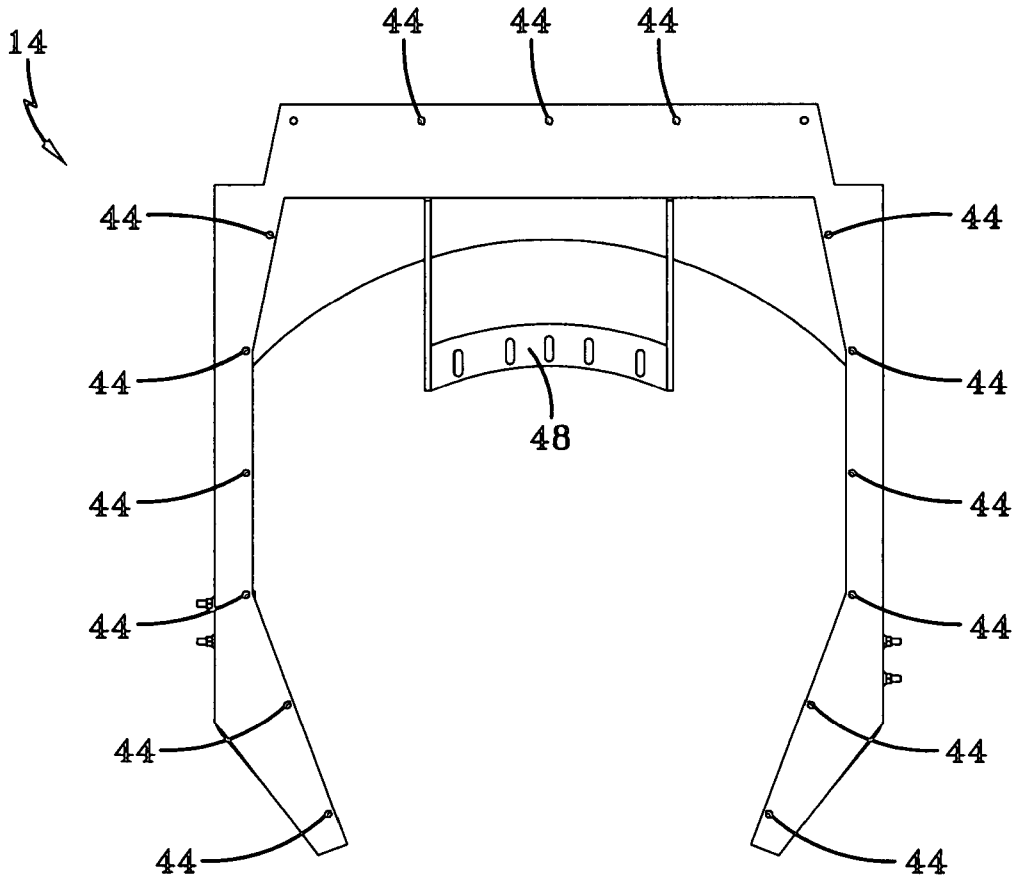
14
44
44
44
44
44
44
44
48
44
44
44
44
44
44
44
44

FIG-5B

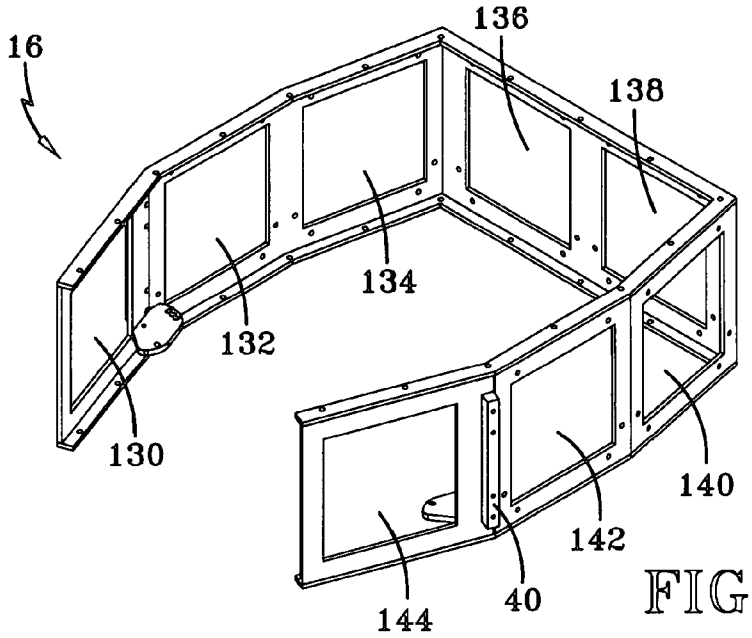

FIG-6A

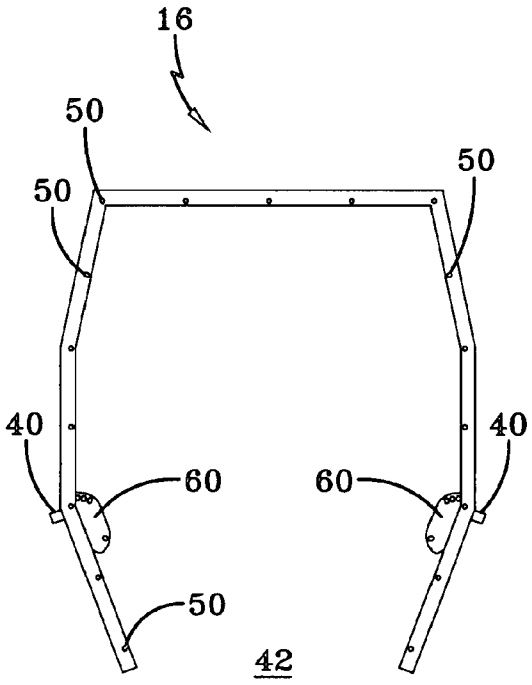

FIG-6B

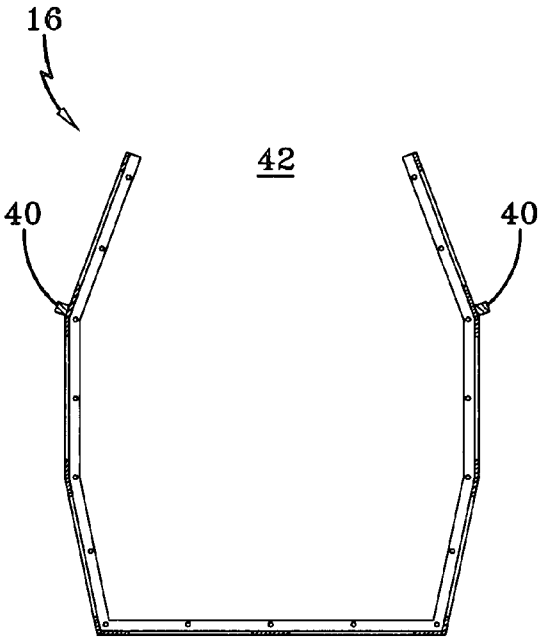

FIG-6C

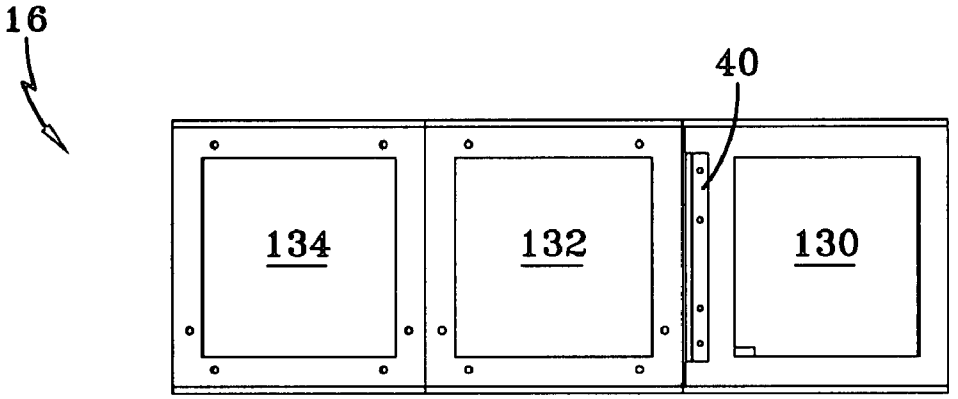

FIG-6D

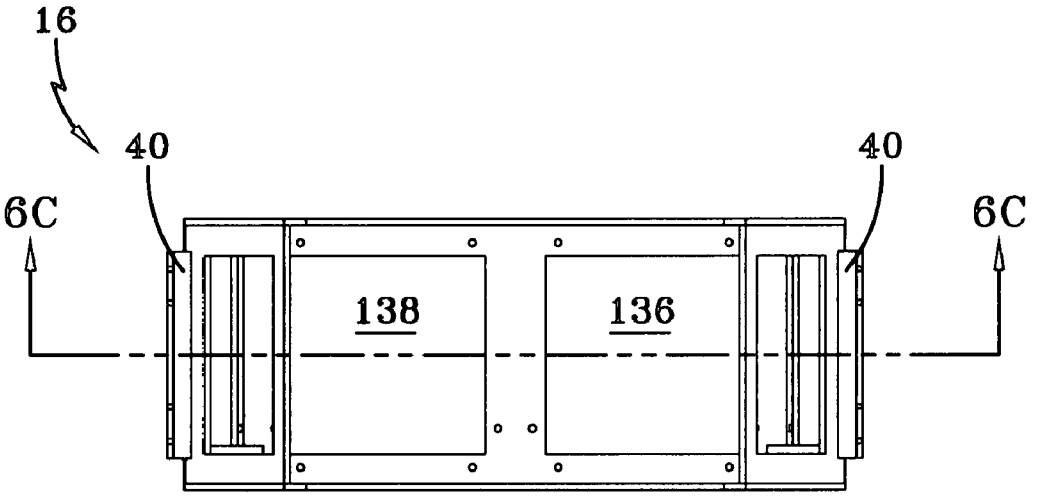

FIG-6E

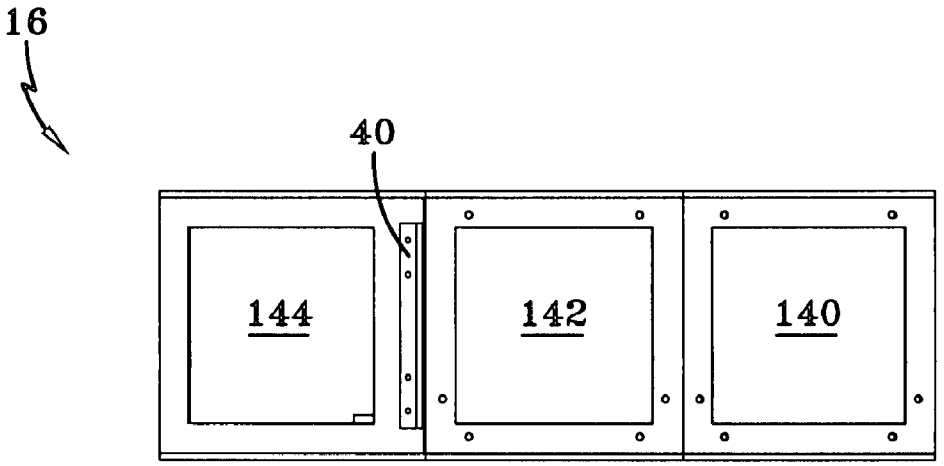

FIG-6F

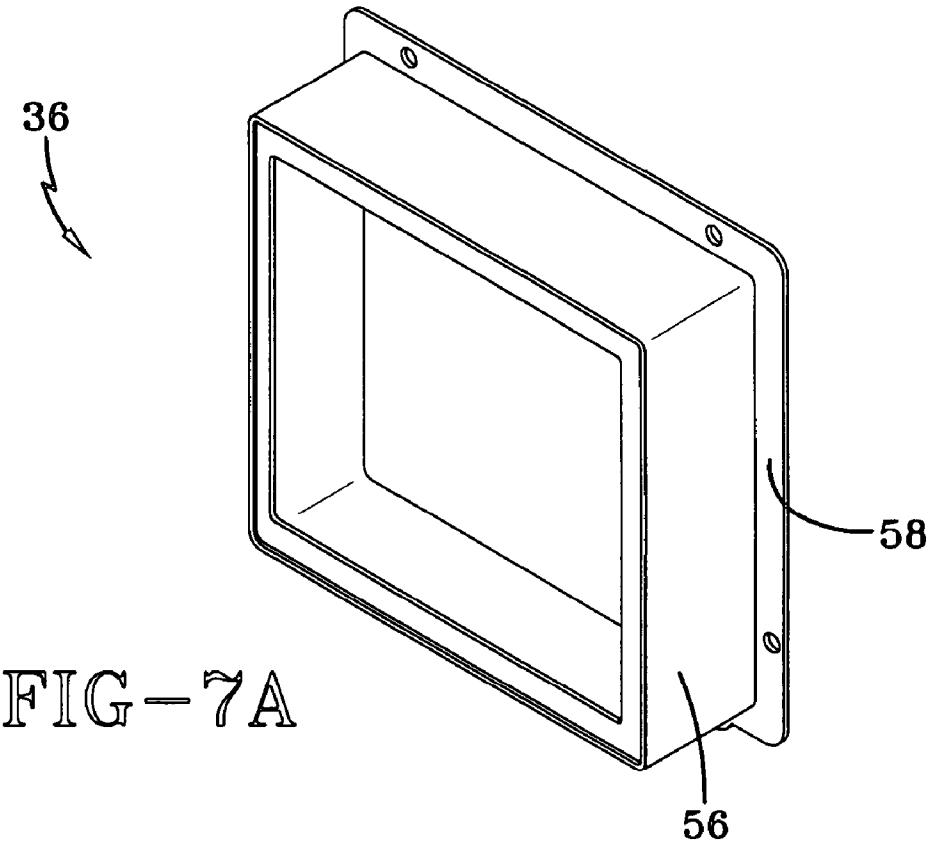

FIG-7A

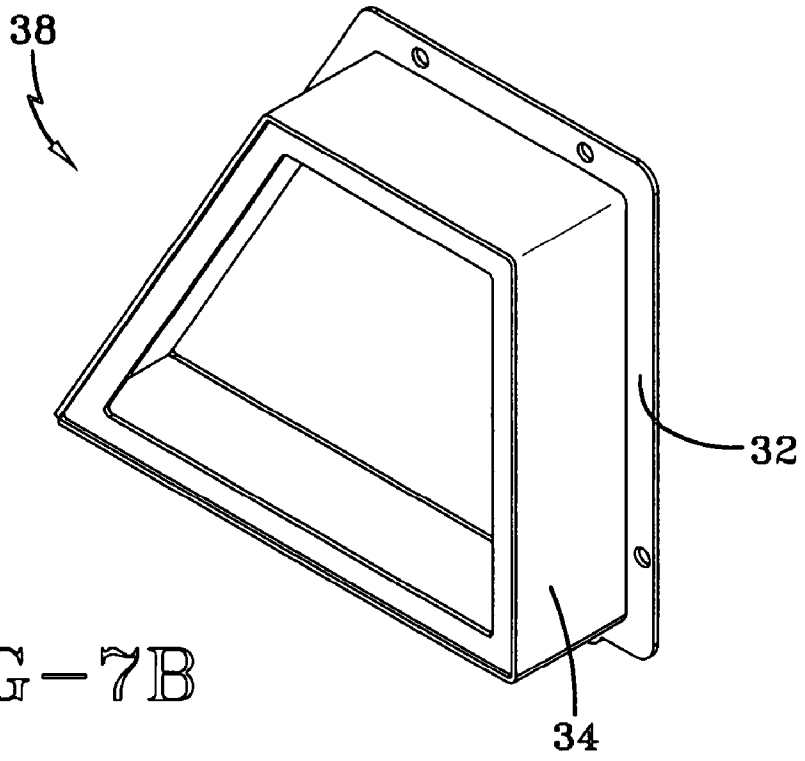

FIG-7B

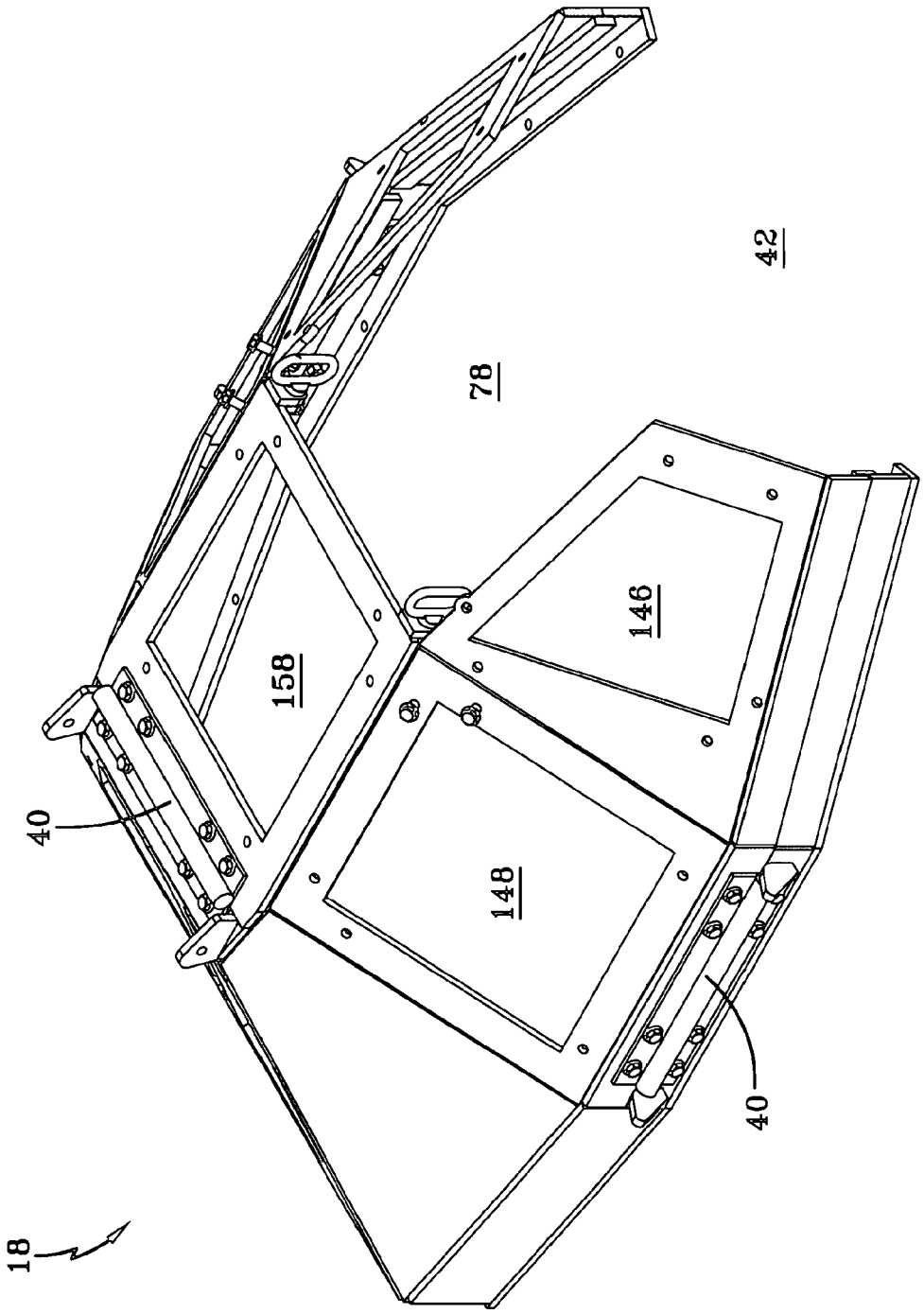

FIG-8A

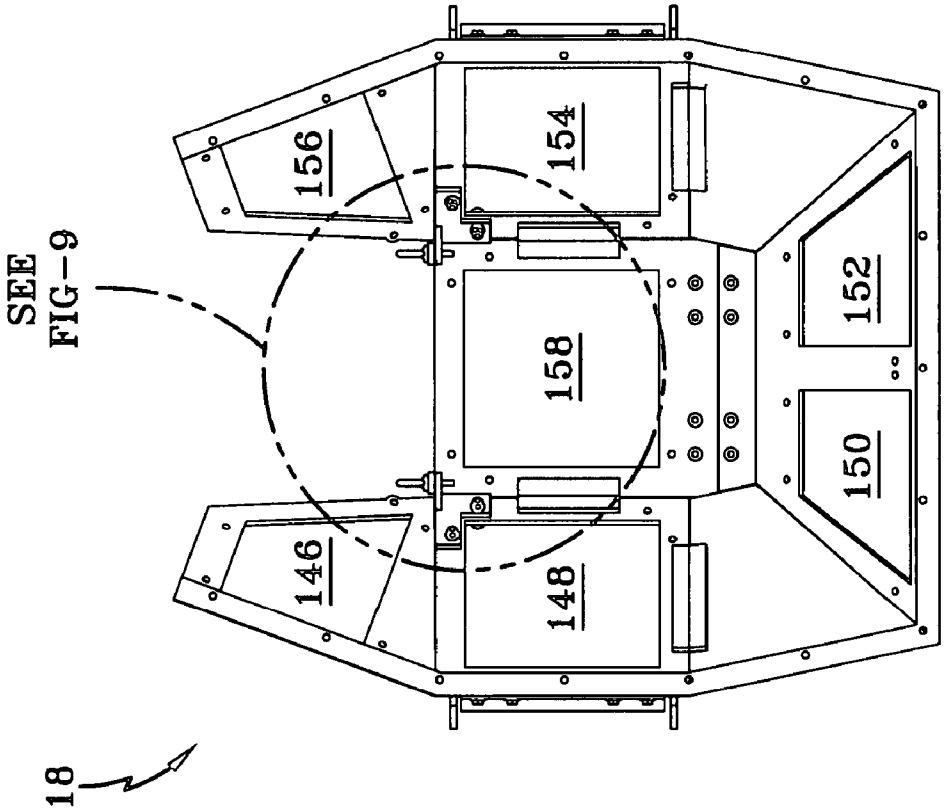
SEE
FIG-9
156
154
158
146
148
152
150
18

FIG-8C

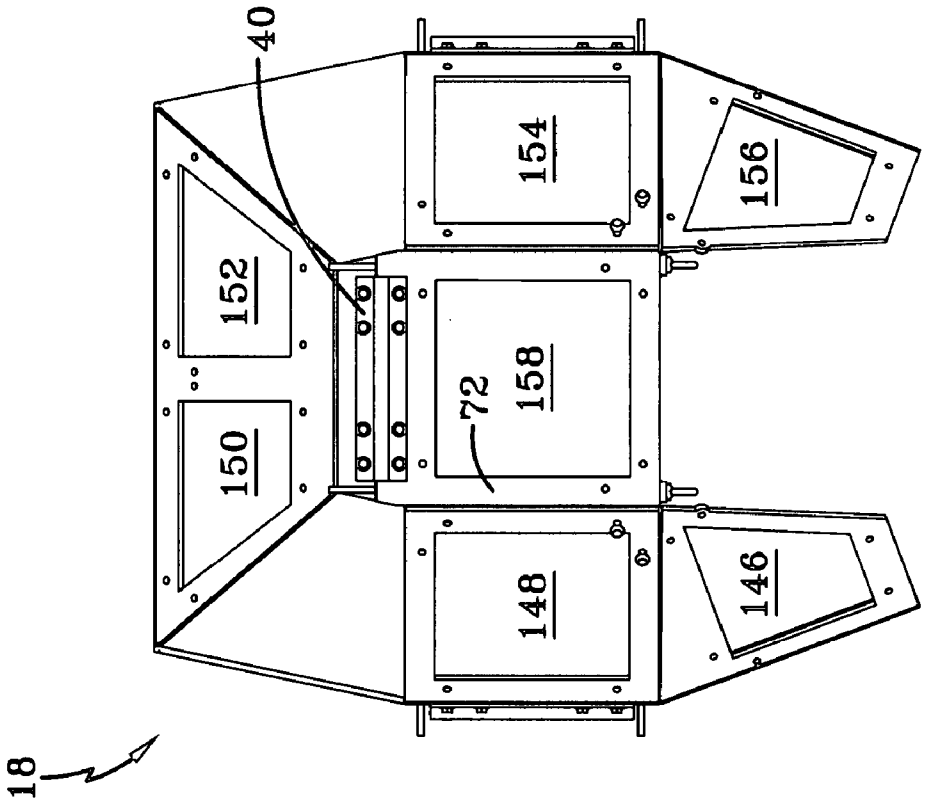
40
152
150
154
158
72
156
148
146
18

FIG-8B

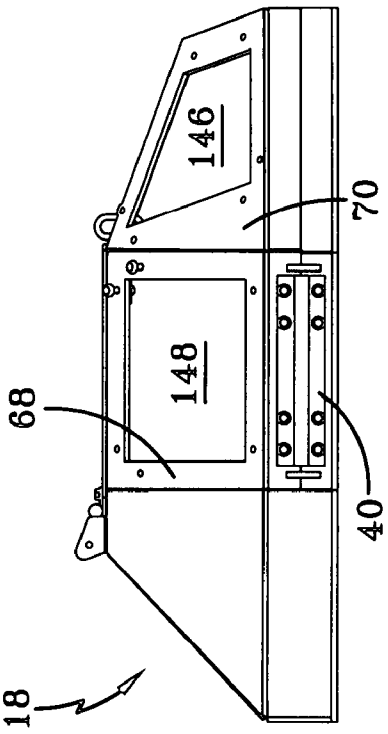

FIG-8D

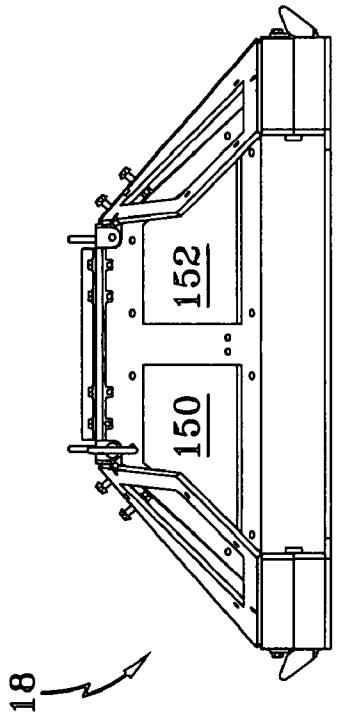

FIG-8E

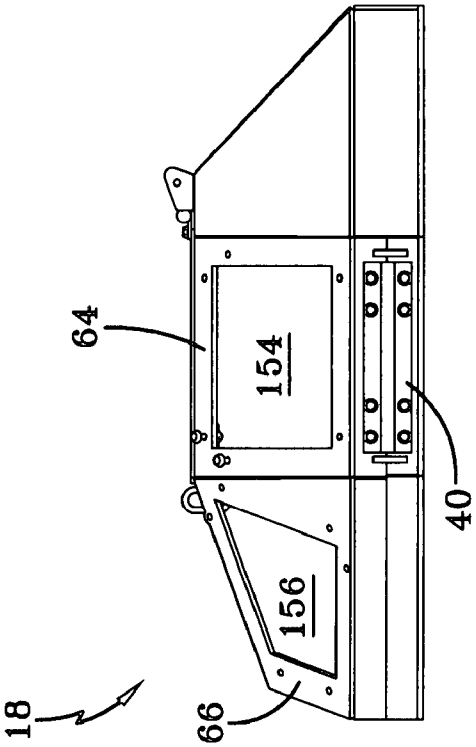

FIG-8F

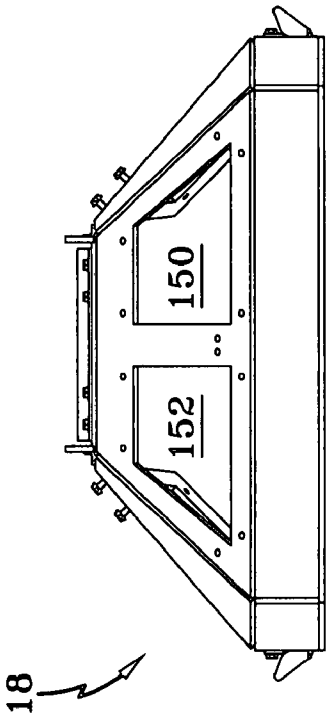

FIG-8G

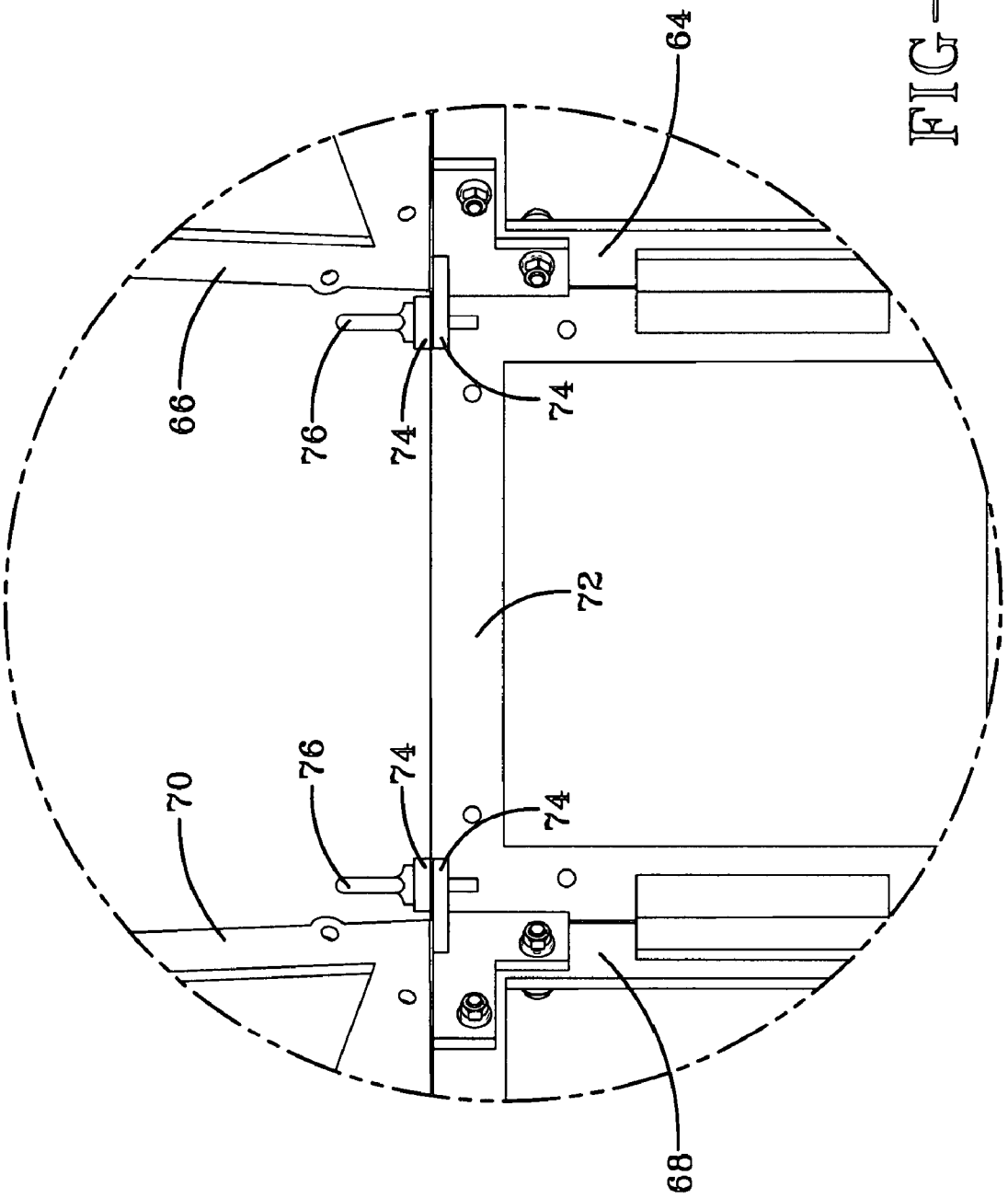

FIG—9

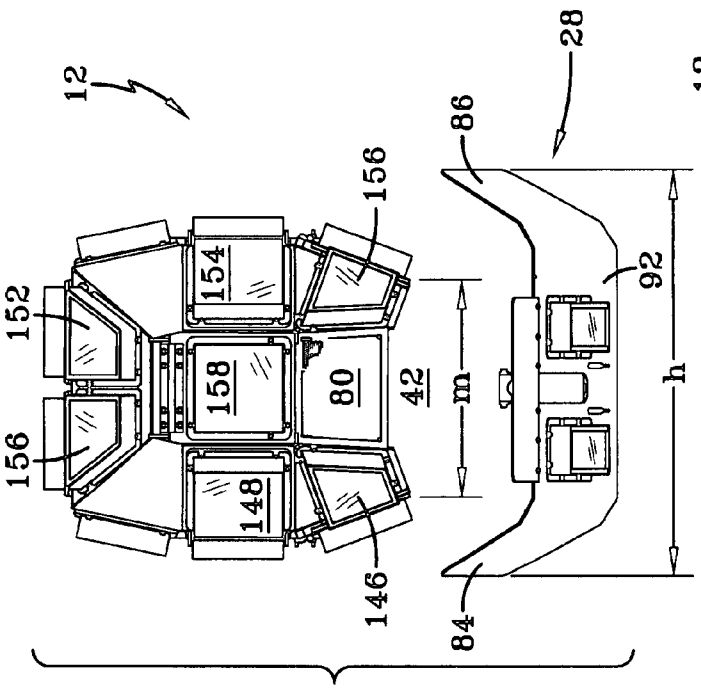

FIG-10B

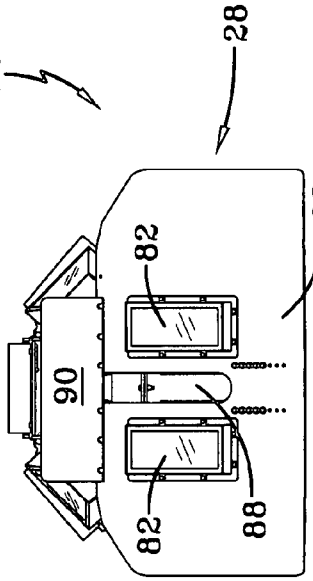

FIG-10A

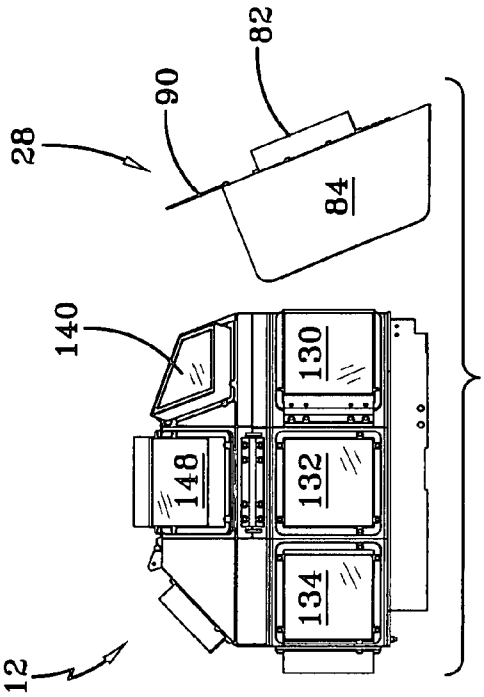

FIG-10C

VEHICLE PROTECTIVE STRUCTURE

CROSS-REFERENCE TO RELATED APPLICATION

This application is a divisional of U.S. patent application Ser. No. 11/998,977, filed Nov. 10, 2007, the disclosures of which are expressly incorporated by reference herein.

STATEMENT REGARDING FEDERALLY SPONSORED RESEARCH OR DEVELOPMENT

The invention described herein was made in the performance of official duties by employees of the Department of the Navy and may be manufactured, used, licensed by or for the United States Government for any governmental purpose without payment of any royalties thereon.

FIELD OF THE INVENTION

The invention generally relates to protective structures. In particular, the invention relates to protective structures used for protection against projectiles.

BACKGROUND OF THE INVENTION

The invention relates to protective structures. There is a significant need for the invention as there are no protective structures available or known which provide the features and benefits of the invention.

SUMMARY OF THE INVENTION

The invention relates to protective structures. The invention relates to protective structures adapted to protect against projective weapons or fragments that in one embodiment is mounted to a vehicle to enclose at least part of an area that a weapons or apparatus operator occupies. Embodiments of the invention have an upper section which has protective overhead segments that can be locked and positioned such that an occupant of the protective structure have overhead protection as well as the ability to exit from the protective structure by positioning the segments to permit exit or entry from the top area of the protective structure. The structure has a latching mechanism for at least two of the overhead protective segments which are adapted to withstand an impact from projectiles or fragments from bomb blasts. The protective structure has ballistic window placed around the structure, including the overhead protective segments which permit viewing through the windows and protection against expected projectiles or fragments.

BRIEF DESCRIPTION OF THE DRAWING

In the drawings, which are not necessarily to scale, like or corresponding parts are denoted by like or corresponding reference numerals.

FIG. **1** is a side view of a vehicle with an embodiment of the invention mounted thereon;

FIG. **2** is a top view of the vehicle of FIG. **1** without the an embodiment of the invention mounted thereon;

FIG. **3** is a perspective view of one embodiment of a vehicle protective structure;

FIGS. **4**A, **4**B, **4**C **4**D and **4**E are top, front, curb side, driver side and rear views, respectively, of the structure of FIG. **3**, without the shield;

FIGS. **5**A and **5**B are perspective and top views, respectively, of an embodiment of a first portion of a vehicle protective structure;

FIGS. **6**A, B, C, D, E and F are perspective, top, sectional, curb side, rear and driver side views of an embodiment of a second portion of a vehicle protective structure. FIG. **6**C is a sectional view along the line **6**C-**6**C of FIG. **6**E;

FIGS. **7**A and **7**B are perspective views of one type of ballistic windows;

FIGS. **8**A, B, C, D, E, F, and G are perspective, top, bottom, curb side, front, driver side, and rear views, respectively, of an embodiment of an third portion of a vehicle protective structure;

FIG. **9** is an enlarged view of a portion of FIG. **8**C; and

FIGS. **10**A, **10**B, and **10**C are front, top and curb side views, respectively, of FIG. **3**.

DETAILED DESCRIPTION OF THE PREFERRED EMBODIMENTS

FIG. **1** is a side view of a vehicle **10** with one embodiment of a vehicle protective structure **12** mounted thereon. FIG. **2** is a top view of the vehicle **10** of FIG. **1** without the structure **12** mounted thereon. Structure **12** includes a first portion **14**, a second portion **16** and a third portion **18**. The first portion **14** is fixed to a turret (traversal portion) **22** (FIG. **2**) on an upper section of the vehicle **10** and disposed around an opening **24** (FIG. **2**). The second portion **16** is fixed to the first portion **14** and includes a plurality of windows disposed substantially vertically around the opening **24**.

Windows used in these embodiments of the invention are ballistic windows. Ballistic windows are components that are capable of stopping bullets or projectiles, including bomb or explosive fragments, fired at it and can be made of impact resistant materials including materials known as bullet-resistant glass or ballistic windows. The term "bullet" is meant to be used broadly in this case referring to ballistic or high velocity projectiles or weapons, including fragmentary devices and explosives or explosively formed projectiles, which are fired at or in the direction of the window(s) in question. Bullet-resistant glass is frequently constructed using a strong but transparent material such as polycarbonate thermoplastic or by using layers of laminated glass. One desired result is a material with an appearance and light-transmitting behavior of standard glass but offers varying degrees of protection from projectile weapons depending on the weight, configuration and weight requirements or limitations. A polycarbonate layer, including products such as Cyrolon®, Lexan® and Tuffak®, is sometimes sandwiched between layers of regular glass. The use of plastic in the laminate provides impact-resistance, such as physical assault with a hammer, an axe, etc. The plastic provides little in the way of bullet-resistance. The glass, which is much harder than plastic, flattens the bullet and thereby prevents penetration. Ballistic windows, ballistic glass, impact resistant glass or bullet-resistant glass can be 70-75 mm (2.8-3.0 in) thick, but could be more or less depending on the threat or weapons the windows are designed to defeat. Bullet-resistant glass includes glass constructed of laminated glass layers built from glass sheets bonded together with polyvinyl butyral or polyurethane. The glass can include one-way bullet-resistant glass as well as newer types of bullet-resistant glass or transparent materials such as aluminum oxynitride used as the outside "strike plate" layer.

The third portion **18** is fixed to the second portion **16** and extends upwardly and inwardly from the second portion **16** over the opening **24**. The third portion **18** includes a plurality

of windows. A shield **28** may be disposed in front of the first, second and third portions **14**, **16**, **18**. In the case of armed conflict, foreign internal defensive operations or riot control engagements, structure **12** can protect a weapons operator or gunner **26** (FIG. **1**) who operates a gun **20** or other device such as a water cannon, high intensity laser or other anti-personnel or non-lethal personnel weapon system. The gunner or protective structure occupant **26** is located in the opening **24**. However, structure **12** can protect individuals other than a gunner **26**, for example, an observer. Structure **12** can also be used to protect or mount a sensor system or other items of equipment requiring protection and impact resistant windows standing alone or in combination with a weapons system or other anti-personnel or riot control system.

FIG. **3** is a perspective view of the vehicle protective structure **12** without the vehicle **10**. FIGS. **4**A, **4**B, **4**C **4**D and **4**E are top, front, curb side, driver side and rear views, respectively, of the structure **12** of FIG. **3**, without the shield **28**. As best seen in FIGS. **3** and **4**A, the first, second and third portions **14**, **16**, **18** define a front opening **42**. The gun **20** (FIG. **1**) is disposed in the front opening **42** and the shield **28** (FIG. **3**) is mounted adjacent the front opening **42**.

In the embodiment shown in FIGS. **4**A-**4**E, second portion **16** includes windows **130**, **132**, **134**, **136**, **138**, **140**, **142**, **144**. Window **130** is the front curb side window; window **132** is the second curb side window; window **134** is the rear curb side window; window **136** is the right rear window; window **138** is the left rear window; window **140** is the rear driver side window, window **142** is the second driver side window; and window **144** is the front driver side window.

The windows **130**, **132**, **134**, **136**, **138**, **140**, **142**, **144** of the second portion **16** are substantially planar (not curved) and may be rectangular in shape. Second portion **16** may have eight windows as shown, but more or fewer windows may be used.

The eight windows **130**, **132**, **134**, **136**, **138**, **140**, **142**, **144** may be the same size and, additionally, may be the same type of window (i.e., interchangeable) as the windows **36** in the doors of the vehicle **10** of FIG. **1**. "Same type" of window means the windows have substantially the same size and shape and are interchangeable without any modifications. One or more of the windows **130**, **132**, **134**, **136**, **138**, **140**, **142** and **144** may be hinged. In FIGS. **4**A-**4**E, the front driver side and curb side windows **144**, **130** are shown mounted with hinges **40** to the second portion **16**. Hinges **40** allow windows **144**, **130** to rotate outward and rearward.

Third portion **18** may have seven windows **146**, **148**, **150**, **152**, **154**, **156**, **158** as shown, but more or fewer windows may be used. Window **146** is the front curb side window; window **148** is the rear curb side window; window **150** is the right rear window; window **152** is the left rear window; window **154** is the rear driver side window; window **156** is the front driver side window; and window **158** is the top window. Windows **146**, **148**, **150**, **152**, **154**, **156** and **158** may be substantially planar.

The windows **148**, **158**, **154** may be the same type of window (i.e., interchangeable) as the windows **130**, **132**, **134**, **136**, **138**, **140**, **142**, **144** of the second portion **16** and the windows **36** of the vehicle doors. Windows **148**, **158** and **154** may be rectangular. Windows **146**, **150**, **152**, **156** may be trapezoidal in shape and be the same type of window (i.e., interchangeable) as the window **38** in the door of vehicle **10** (FIG. **1**). Top window **158** (FIG. **4**A) may be mounted with a hinge **40** so that window **158** may rotate upwardly and rearwardly.

Front and rear driver side windows **156**, **154** (FIG. **4**C) may be mounted to the second portion **16** as a single unit using hinge **40**. Thus, front and rear driver side windows **156**, **154** may rotate outwardly and downwardly as a single unit. Front and rear curb side windows **146**, **148** (FIG. **4**D) may be similarly mounted using a hinge **40** to thereby rotate outwardly and downwardly as a single unit. The front driver and curb side windows **156**, **146** may be the same type of window as window **38** in the door of vehicle **10** (FIG. **1**), that is, substantially trapezoidal. The rear driver and curb side windows **154**, **148** may be the same type of window as window **36** in the door of vehicle **10** (FIG. **1**), that is, substantially rectangular.

Third portion **18** may include right rear and left rear windows **150**, **152**. The two rear windows **150**, **152** may be the same type of window as window **38** in the door of vehicle **10** (FIG. **1**), that is, substantially trapezoidal.

FIGS. **5**A and **5**B are perspective and top views, respectively, of one embodiment of a first portion **14** of the vehicle protective structure **12**. The bolt holes **44** in the first portion **14** form a pattern that may be the same pattern as the bolt hole pattern in both the second portion **16** (FIG. **6**B) and the third portion **18** (FIG. **8**C). First portion **14** includes a pair of mounting brackets **46** and a rear bolt weldment **48** for fixing the first portion **14** to a vehicle, such as vehicle **10**.

FIGS. **6**A, B, C, D, E and F are perspective, top, sectional, curb side, rear and driver side views of an embodiment of a second portion **16** of a vehicle protective structure **12**. FIG. **6**C is a sectional view along the line **6**C-**6**C of FIG. **6**E. The windows **130**, **132**, **134**, **136**, **138**, **140**, **142**, **144** of the second portion **16** are not shown in FIGS. **6**A-**6**F. However, the window openings in second portion **16** for windows **130**, **132**, **134**, **136**, **138**, **140**, **142** and **144** are labeled with the corresponding window reference numeral for clarity.

The gun **20** (FIG. **1**) fits in front opening **42** (FIGS. **6**A, B, C). Front opening **42** provides for about 60 degrees of horizontal gun rotation, that is, about 30 degrees each side of the center position. Thus, the first, second and third portions **14**, **16**, **18** provide about 300 degrees of protective to the gunner. The pattern of the bolt holes **50** (FIG. **6**B) may be the same as the pattern of the bolt holes **44** in the first portion **14** (FIG. **5**A) and the pattern of the bolt holes **52** in the third portion **18** (FIG. **8**C).

FIG. **7**A shows a rectangular ballistic window **36** (see also FIG. **1**) that includes a frame **56** and a flange **58**. Windows **36** may be used for windows **130**, **132**, **134**, **136**, **138**, **140**, **142**, **144** of the second portion **16**. Flange **58** may be bolted to second portion **16** so that each window is positioned in a corresponding window opening. The front driver side and front curb side windows **144**, **130** (see also FIGS. **4**D and **4**C), rather than being bolted to the second portion **16**, may be mounted on a hinge **40**. A manually operated opening and closing device **60** (FIG. **6**B) (details not shown) may be provided for rotating the front driver side and front curb side windows **144**, **130** outwardly.

FIGS. **8**A, B, C, D, E, F, and G are perspective, top, bottom, curb side, front, driver side, and rear views, respectively, of an embodiment of an third portion **18** of a vehicle protective structure **12**. The windows **146**, **148**, **150**, **152**, **154**, **156**, **158** of the third portion **18** are not shown in FIGS. **8**A-**8**G. However, the window openings in third portion **18** for windows **146**, **148**, **150**, **152**, **154**, **156**, **158** are labeled with the corresponding window reference numeral for clarity. Ballistic window **36** of FIG. **7**A may be used for windows **148**, **158**, **154**. FIG. **7**B shows a ballistic window **38** (see also FIG. **1**) having a frame **34** and a flange **32**. Ballistic window **38** may be used for windows **150**, **152**, **156**. Flange **32** may be bolted to third portion **18** so that each window is positioned in a corresponding window opening.

Referring to FIGS. **8**F and **8**D, the front and rear driver side windows **156**, **154** and the front and rear curb side windows **146**, **148** are fixed to respective frames **66**, **64**, **70**, **68**. Frame **64** is fixed to a hinge **40** and frame **66** is fixed to frame **64** such that windows **156**, **154** may be rotated outwardly and downwardly as a single unit. Similarly, frame **68** is fixed to a hinge **40** and frame **70** is fixed to frame **68** such that windows **146**, **148** may be rotated outwardly and downwardly.

Referring to FIG. **8**B, frame **72** for window **158** may be fixed to third portion **18** with a hinge **40** such that window **158** may be rotated upwardly and rearwardly. To secure top window **158**, driver side windows **156**, **154** and curb side windows **146**, **148** in a closed position, flanges or bosses **74** (FIG. **9**) are fixed to frames **72**, **68** and **64**. Frame **72** has two bosses **74** and frames **68**, **64** have one boss each. Each boss **74** includes an opening therein for receiving a quick release pin **76**. Thus, the opening in boss **74** of frame **68** is aligned with the opening in one of the bosses **74** of frame **72** and pin **76** is inserted therein. Similarly, the opening in boss **74** of frame **64** is aligned with the opening in the other of the bosses **74** of frame **72** and pin **76** is inserted therein. To rotate the top window **158** and the side windows **156**, **154** and **146**, **148**, the quick release pins **76** are removed from the openings in the bosses **74**. Pins **76** may be attached to lanyards to prevent misplacing them.

Referring to FIG. **8**A, upper opening **78** in third portion **18** may be closed with an elastic net **80** shown in FIG. **10**B.

Referring to FIG. **8**C, the pattern of the bolt holes **52** (FIG. **8**C) may be the same as the pattern of the bolt holes **44** in the first portion **14** (FIG. **5**A) and the pattern of the bolt holes **50** in the second portion **16** (FIG. **6**B). In one embodiment, the second portion **16** is fixed to the first portion **14** using threaded fasteners all having the same size head and the third portion **18** is fixed to the second portion **16** using threaded fasteners all having the same size head as the fasteners used to fix the second portion **16** to the first portion **14**. In some embodiments of the invention, the second portion **16** is not used and the third portion **18** is fixed directly to the first portion **14**. In other embodiments of the invention, the second portion **16** is fixed to the first portion **14** and the third portion **18** is not included.

Third portion **18** may include one or more handles **30** (FIGS. **4**A and **4**B).

FIGS. **10**A, **10**B, and **10**C are front, top and curb side views, respectively, of FIG. **3**. Shield **28** may be fixed to a pintle (not shown) that is used to mount the gun **20** (FIG. **1**). Shield **28** includes a front portion **92** and right and left side portions **84**, **86** that extend rearwardly from the front portion **92**. Front portion **92** includes at least one ballistic window **82** and an opening **88** for gun **20** (FIG. **1**). The transverse extent "h" (FIG. **10**B) of the shield **28** is greater than the transverse extent "m" of the front opening **42**. Front portion **92** may include a top plate **90** that extends above the opening **88**.

Projectile resistant armor (e.g., steel) and ballistic glass may be used to fabricate vehicle protective structure **12**.

While the invention has been described with reference to certain preferred embodiments, numerous changes, alterations and modifications to the described embodiments are possible without departing from the spirit and scope of the invention as defined in the appended claims, and equivalents thereof.

What is claimed is:

1. A method of making, comprising:

providing a vehicle protective structure comprising a first portion, a second portion and a third portion;

coupling the first portion to a traversal portion of a vehicle, the vehicle comprising an upper section having an opening;

coupling the second portion to the first portion, the second portion having an upper and lower side area adapted to at least partially enclose a perimeter of a space above said opening and having a plurality of ballistic windows disposed substantially around said perimeter; and

coupling the third portion to the second portion, the third portion comprising a first and second member adapted to be selectively positioned above at least a portion of said space above said opening, said first member having a first and a second side, said first side is adapted to permit said first member to be moved along an arc and is coupled to an upper section of either said second portion or a section of said third portion which is in proximity to said second portion, said second side is adapted to be selectively coupled to said second member, said first and second member each further comprising at least one ballistic window.

2. The method of claim **1** further comprising mounting a top window to the third portion with a hinge.

3. The method of claim **2** further comprising mounting windows on a first section and a second section of a first side area of the third portion as a single unit to the third portion with a hinge and mounting windows on a first section and a second section of a second side area of the third portion as a single unit to the third portion with a hinge, wherein the first side area and the second side area of the third portion are on opposing side areas of the third portion.

4. The method of claim **2** wherein coupling the first portion, coupling the second portion, and coupling the third portion includes coupling using fasteners and a bolt hole pattern, wherein the bolt hole pattern is the same for the first, second and third portions.

5. The method of claim **1**, wherein said first and second members each comprise a frame structure which is coupled to said at least one ballistic window.

6. The method of claim **1**, wherein said first and second members are further each provided with at least one quick release coupling section, said quick release coupling sections in adjacent sections of said first and second members, and a quick release pin which selectively couples said first and second members in a first position.

7. A method of manufacture for a protective structure comprising:

providing a base structure; and

providing a rotatable protective structure at least partially enclosing an area that is formed from materials which can withstand an impact event having up to a first force, said rotatable protective structure is rotatably coupled to said base structure and has a plurality of protective sections, pivoting structures, and latching structures;

wherein said plurality of protective sections comprises fixed protective sections and moveable protective sections each having at least one ballistic object resistant transparent section coupled to said protective section, wherein said plurality of moveable protective sections are coupled to said rotatable protective structure with said pivoting structures to permit said plurality of moveable protective structures to selectively move from a closed position to an open position;

wherein at least one said latching mechanism is adapted to couple at least two of said protective structures to each other in said first position.

8. A method of manufacture as in claim **7**, wherein at least one of said latching mechanisms comprises a quick release pin.

9. A method of manufacture as in claim **7**, wherein at least one of said pivoting structures comprise a hinge and at least one of said latching mechanism comprises a quick release latch, at least one of said moveable protective sections are coupled to said protective structure by said hinge on one end and said quick release latch in proximity to a edge section in proximity to an opposing end of said moveable protective structure, said quick release latch couples at least two said moveable protective sections in said closed position.

10. A method of manufacture as in claim **7**, wherein said moveable protective sections, pivoting structures, and latching structures are adapted to cooperatively distribute force from an impact event upon at least one of said moveable protective sections and be sufficiently strong to maintain integrity and ability to be moved up to said first impact force.

11. A method of manufacture as in claim **7**, wherein said first force comprises a force from a ballistic object.

12. A method of manufacture comprising:

providing a vehicle protective structure comprising a first portion, a second portion and a third portion;

coupling the first portion to a traversal portion of a vehicle, the vehicle comprising an upper section having an opening;

coupling the second portion to the first portion, the second portion having an upper and lower side area adapted to at least partially enclose a perimeter of a space above said opening and having a plurality of ballistic windows disposed substantially around said perimeter; and

coupling the third portion to the second portion, the third portion comprising a first and second hatches adapted to be selectively positioned above at least a portion of said space above said opening, said first hatch is defined by a planar surface section with an edge perimeter having a first and a second opposing edge, said first edge is adapted with a hinge section to permit said first portal to be moved along an arc and is coupled to an upper section of either said second portion or a section of said third portion which is in proximity to said second portion, said second side is adapted to be selectively coupled to said second portal, said first and second portal each further comprising at least one ballistic window.

13. The method of claim **12**, further comprising mounting a top window to the third portion with a hinge.

14. The method of claim **12**, further comprising mounting ballistic windows on a first and second section of a first side area of said third portion as a single unit to the third portion with a hinge and mounting ballistic windows on a first and section of a second side area of said third portion as a single unit to the third portion with a hinge, wherein said first area and second side area of said third portion are on opposing side areas of said third portion.

15. The method of claim **12**, further comprising mounting front and rear driver side windows as a single unit to the third portion with a hinge and mounting said ballistic windows on said first and second sections of said first side area of said third portion as a single unit to said third portion with a hinge.

16. The method of claim **12**, wherein coupling the first portion, coupling the second portion, and coupling the third portion includes coupling using fasteners and a bolt hole pattern, wherein the bolt hole pattern is the same for the first, second and third portions.

17. The method of claim **12**, further providing at least one ballistic window in the third portion as a top ballistic window that is mounted to the third portion with a hinge section on one side of said top ballistic window.

18. The method of claim **12**, wherein said first and second hatches includes a first and second boss each with an opening therein, the third portion further comprising a top window frame for the top window, the top window frame including a pair of bosses with openings therein; and a pair of pins for securing the first and second hatches and the top window in a closed position, one pin being disposed in the opening in the boss of said first hatch and the opening in one of the bosses of the top window and the other pin being disposed in the opening in the boss of said second hatch and the opening in the other of the bosses of the top window.

* * * * *