US008210557B2

(12) **United States Patent**
Schneider

(10) **Patent No.: US 8,210,557 B2**
(45) **Date of Patent: Jul. 3, 2012**

(54) **CONVERTIBLE TRAILER**

(75) Inventor: **John Felix Schneider**, Huntingburg, IN (US)

(73) Assignee: **The United States of America as represented by the Secretary of the Navy**, Washington, DC (US)

(*) Notice: Subject to any disclaimer, the term of this patent is extended or adjusted under 35 U.S.C. 154(b) by 413 days.

(21) Appl. No.: **12/609,958**

(22) Filed: **Oct. 30, 2009**

(65) **Prior Publication Data**

US 2011/0101644 A1 May 5, 2011

(51) **Int. Cl.**
B62D 53/08 (2006.01)

(52) **U.S. Cl.** **280/417.1**; 280/441.2; 280/416.1

(58) **Field of Classification Search** 280/417.1, 280/441.2, 416.1
See application file for complete search history.

(56) **References Cited**

U.S. PATENT DOCUMENTS

2,722,433	A		11/1955	Shinn et al.
3,756,443	A		9/1973	Verschage et al.
3,815,936	A		6/1974	Oaks, Jr.
3,883,019	A		5/1975	Hansen, Jr.
3,889,978	A		6/1975	Kann
3,894,645	A	*	7/1975	Verschage 414/481
4,302,022	A		11/1981	Schoeffler et al.
4,635,997	A	*	1/1987	Holt et al. 296/184.1
4,728,114	A	*	3/1988	Bills 280/425.2
4,832,358	A		5/1989	Bull
5,324,061	A		6/1994	Lay
5,566,964	A		10/1996	Leonard
5,797,614	A		8/1998	Hord et al.
6,203,046	B1		3/2001	Meurer
7,163,226	B1	*	1/2007	Norton et al. 280/433
7,175,205	B2	*	2/2007	Simpson 280/789
7,380,873	B2	*	6/2008	Shoemaker 296/182.1
2006/0027997	A1		2/2006	Grace
2009/0115162	A1		5/2009	Lybrook et al.

* cited by examiner

Primary Examiner — Lesley D Morris
Assistant Examiner — Marlon Arce
(74) *Attorney, Agent, or Firm* — Christopher A. Monsey

(57) **ABSTRACT**

A convertible trailer that may be reconfigured for use with different towing hitch arrangements. The trailer includes a first deck, a second deck, and an adjustable neck configured to support the second deck substantially level with the first deck in a pintle configuration and to support the second deck above the first deck in a fifth wheel configuration.

34 Claims, 23 Drawing Sheets

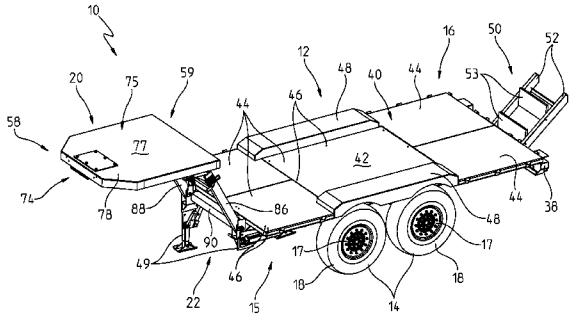

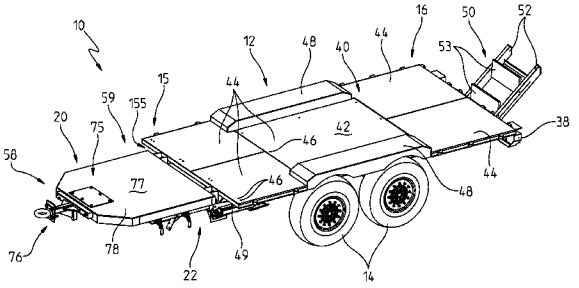

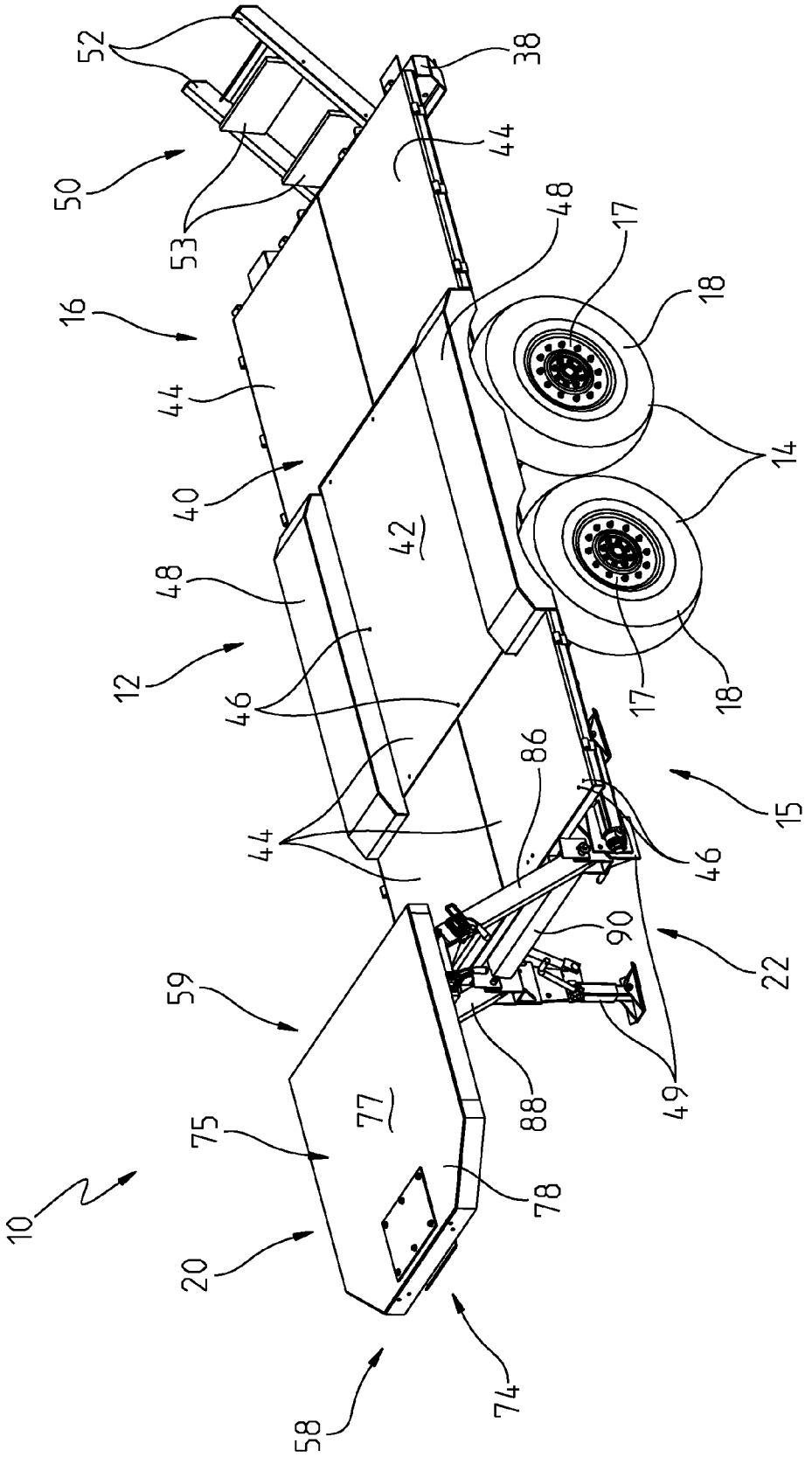
52
38
50
44
53
48
17
16
18
44
14
40
42
48
12
46
17
18
86
15
44
46
90
22
59
49
88
77
75
78
10
20
58
74

FIG. 1

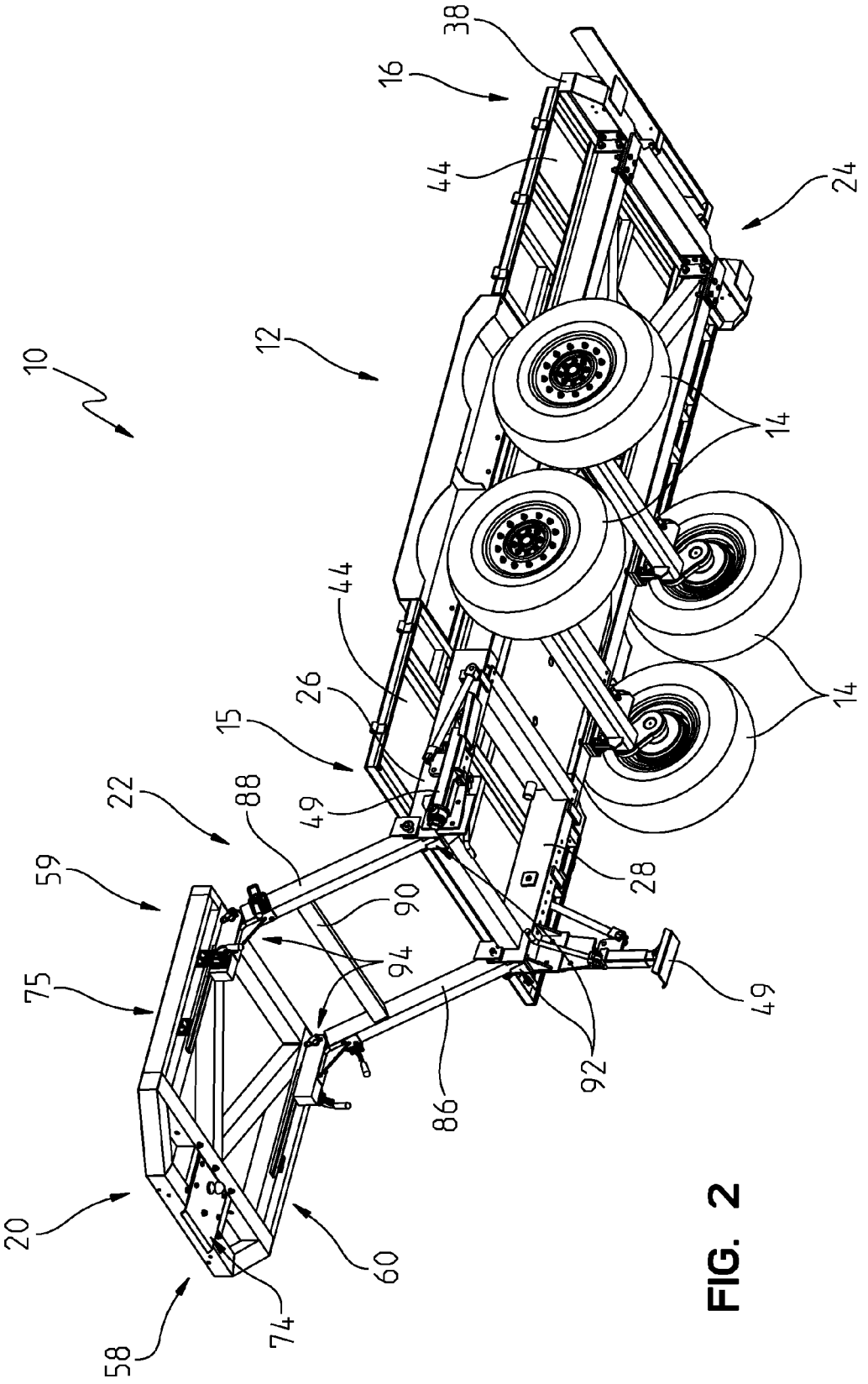
38
16
44
24
12
10
14
44
26
15
22
88
49
59
90
94
75
28
49
86
92
20
60
58
74

FIG. 2

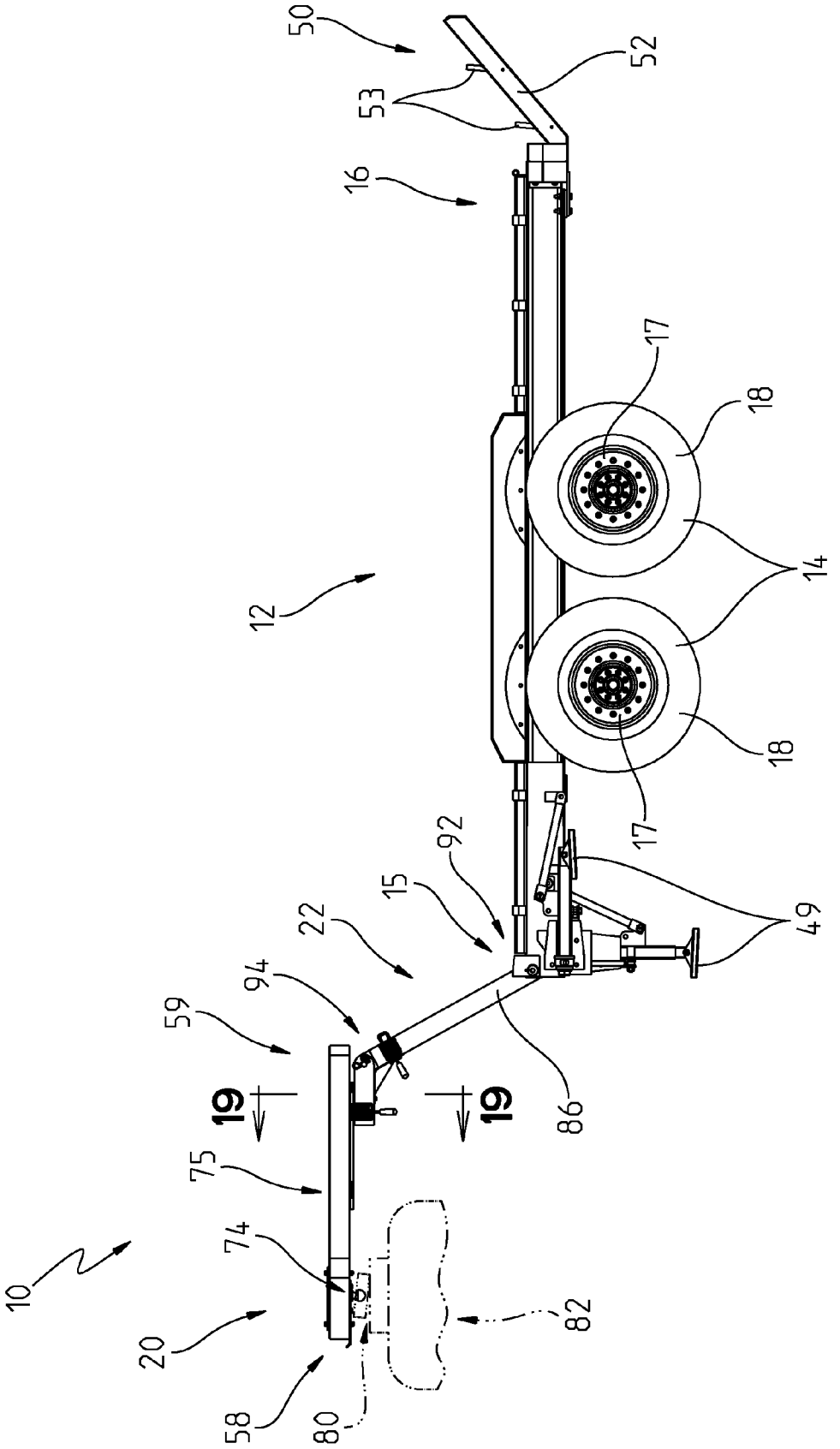
50
52
53
16
17
18
14
12
18
17
92
15
49
22
94
59
19
19
86
75
74
10
20
82
58
80

FIG. 3

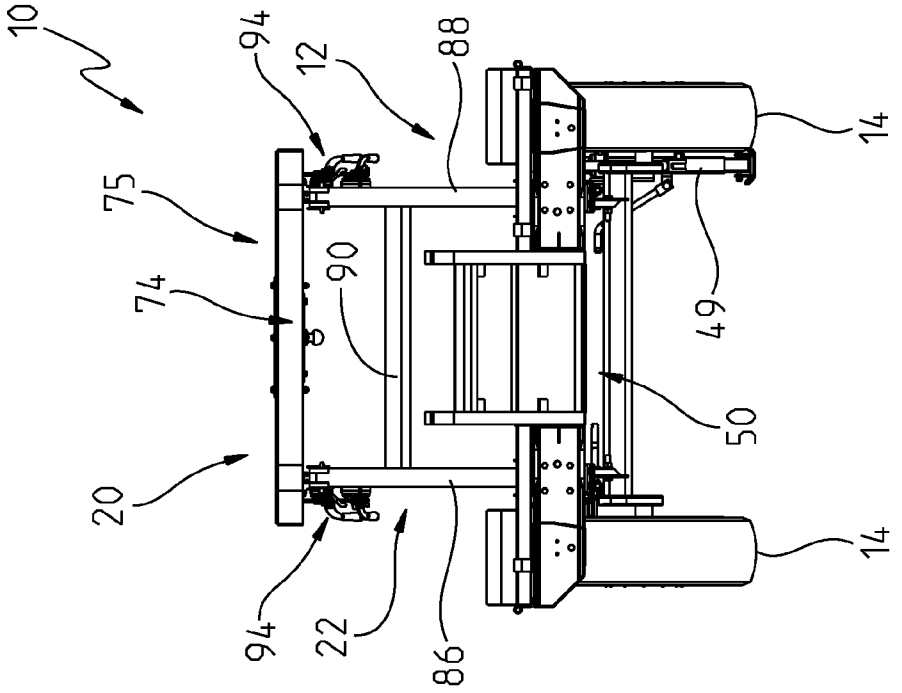
10
94
12
88
75
74
90
20
14
49
50
94
22
86
14

FIG. 5

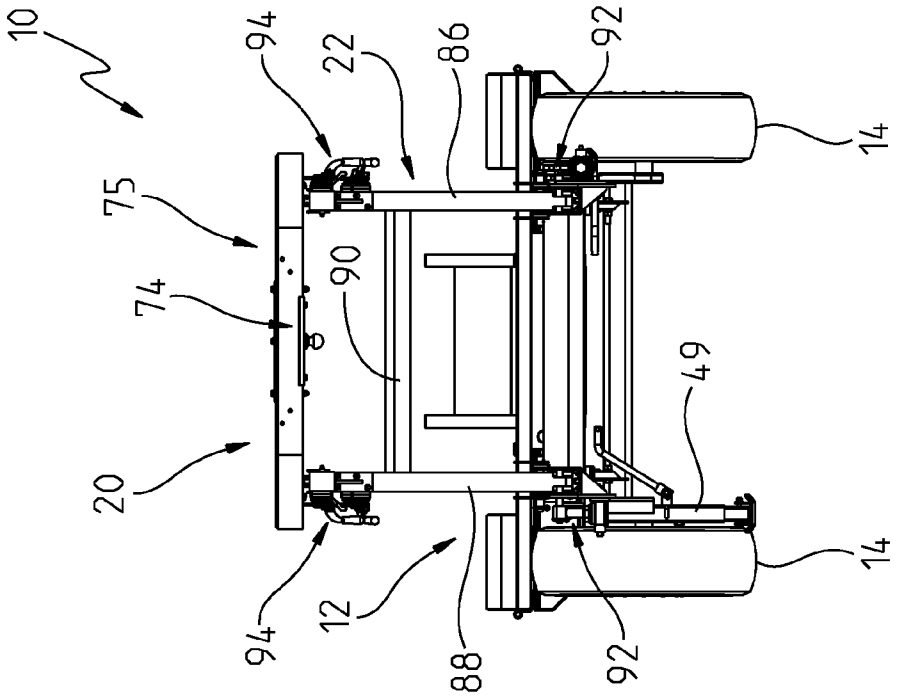
10
94
22
86
92
75
74
90
20
14
49
94
12
88
92
14

FIG. 4

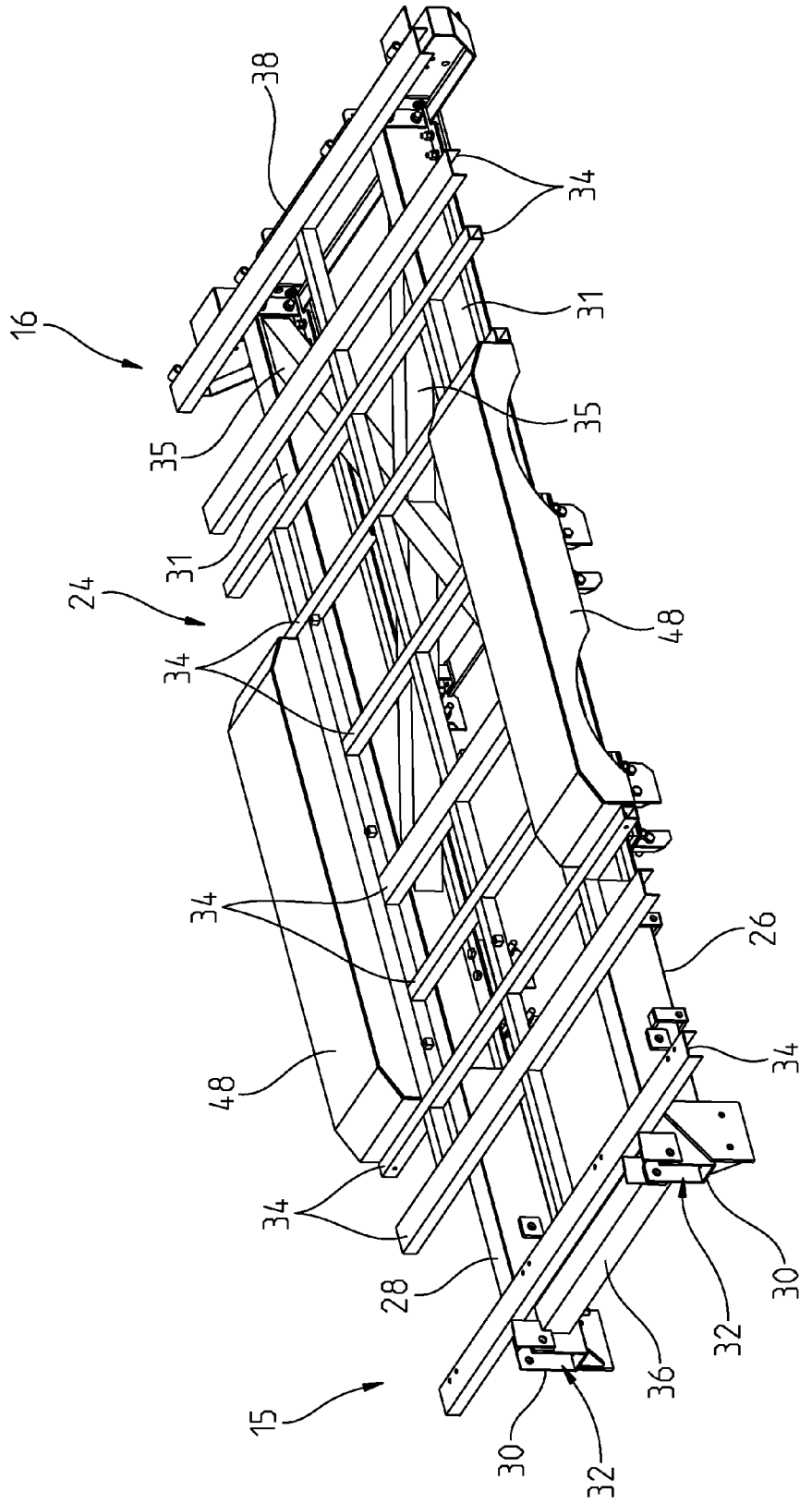

FIG. 6

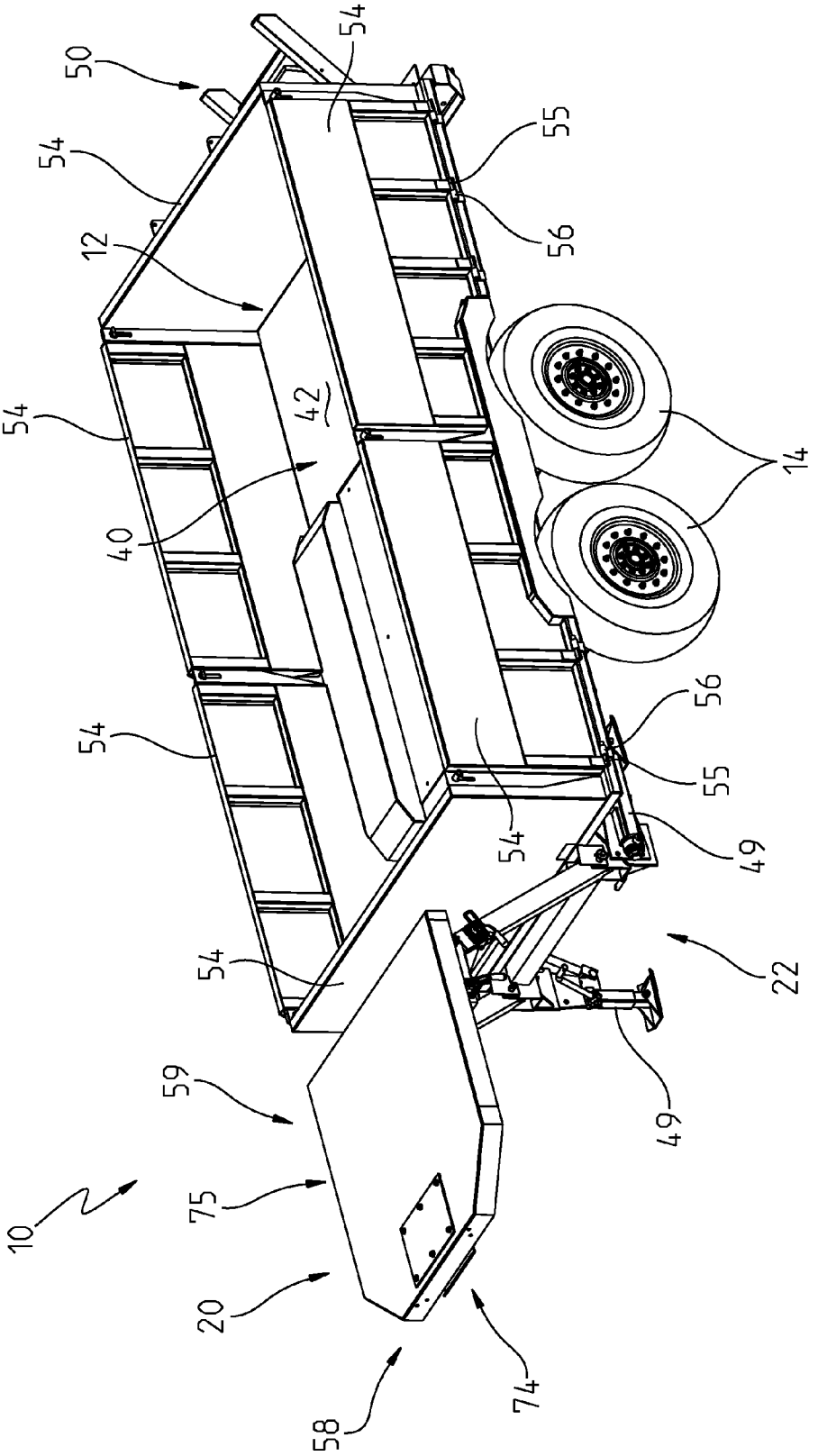

FIG. 7

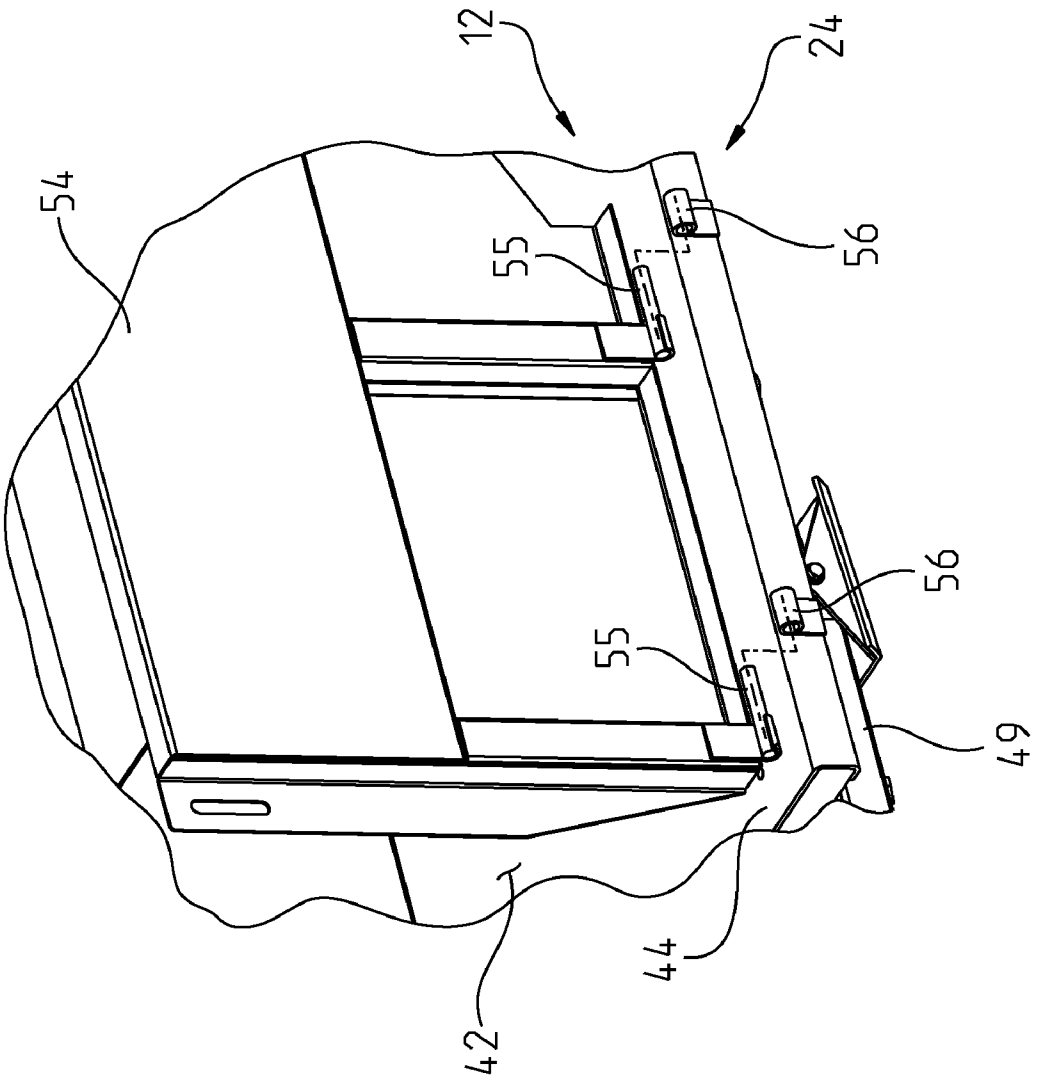

FIG. 8

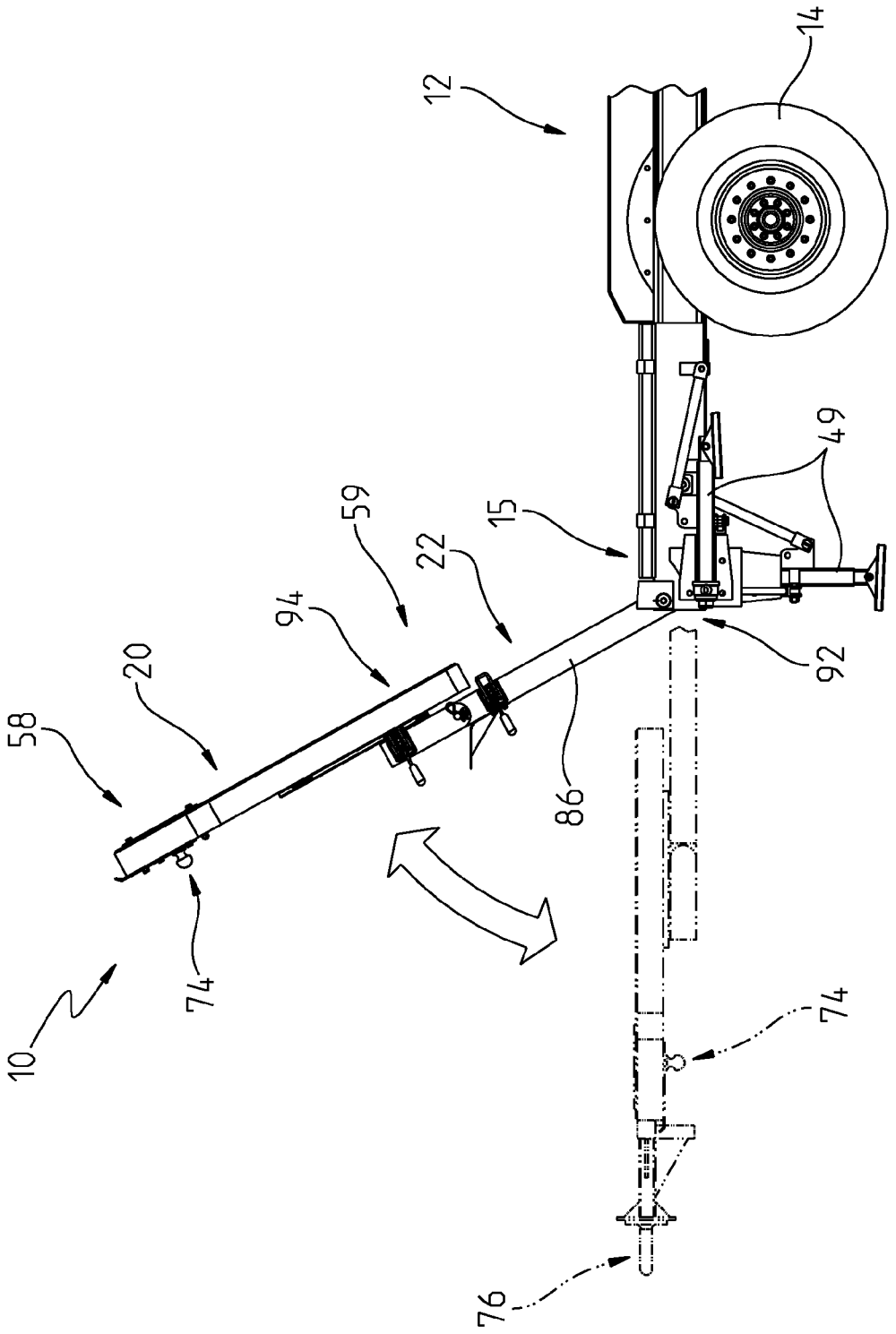

FIG. 9

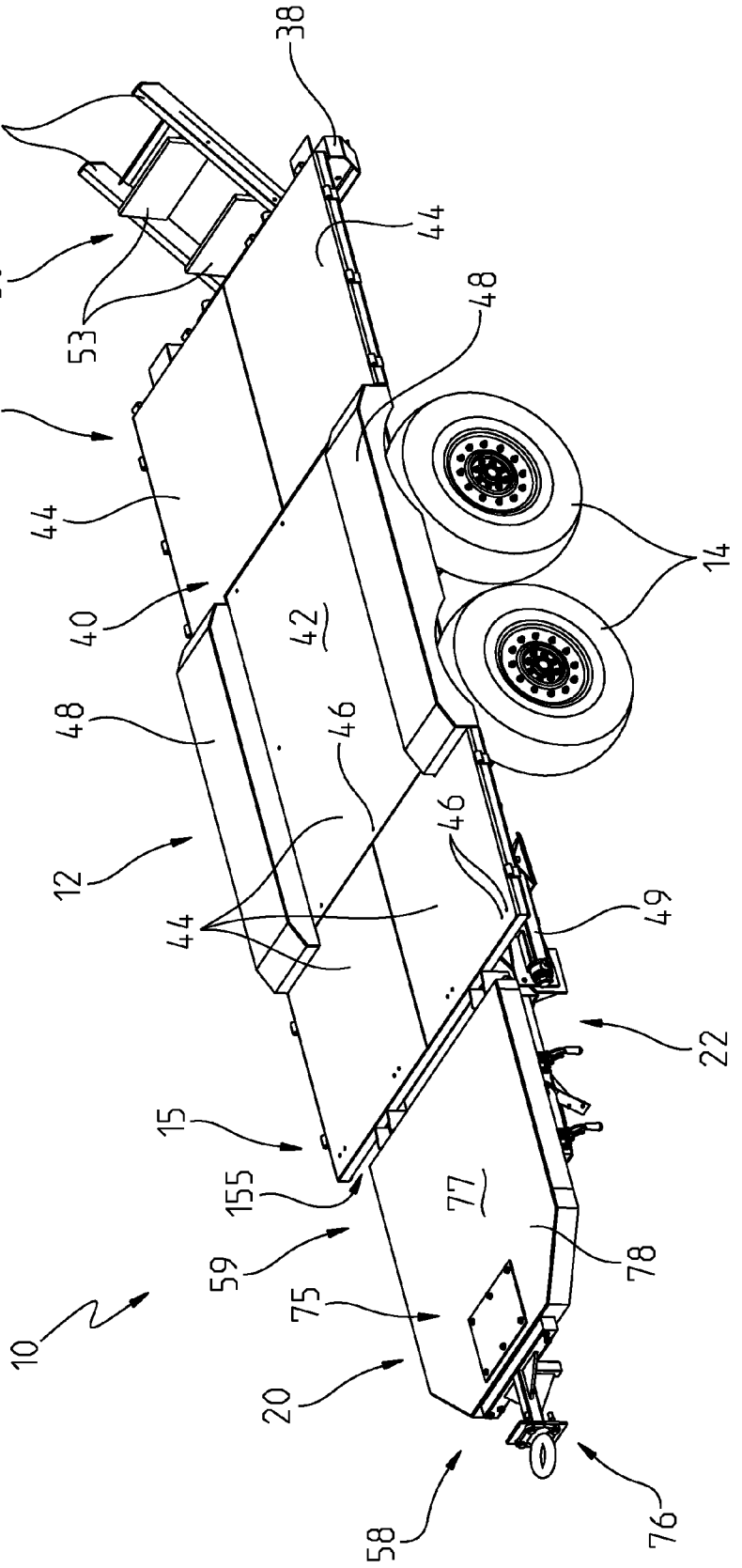
38
52
50
53
44
48
16
44
40
42
14
48
46
46
12
44
49
22
15
155
77
59
78
75
10
20
58
76

FIG. 10

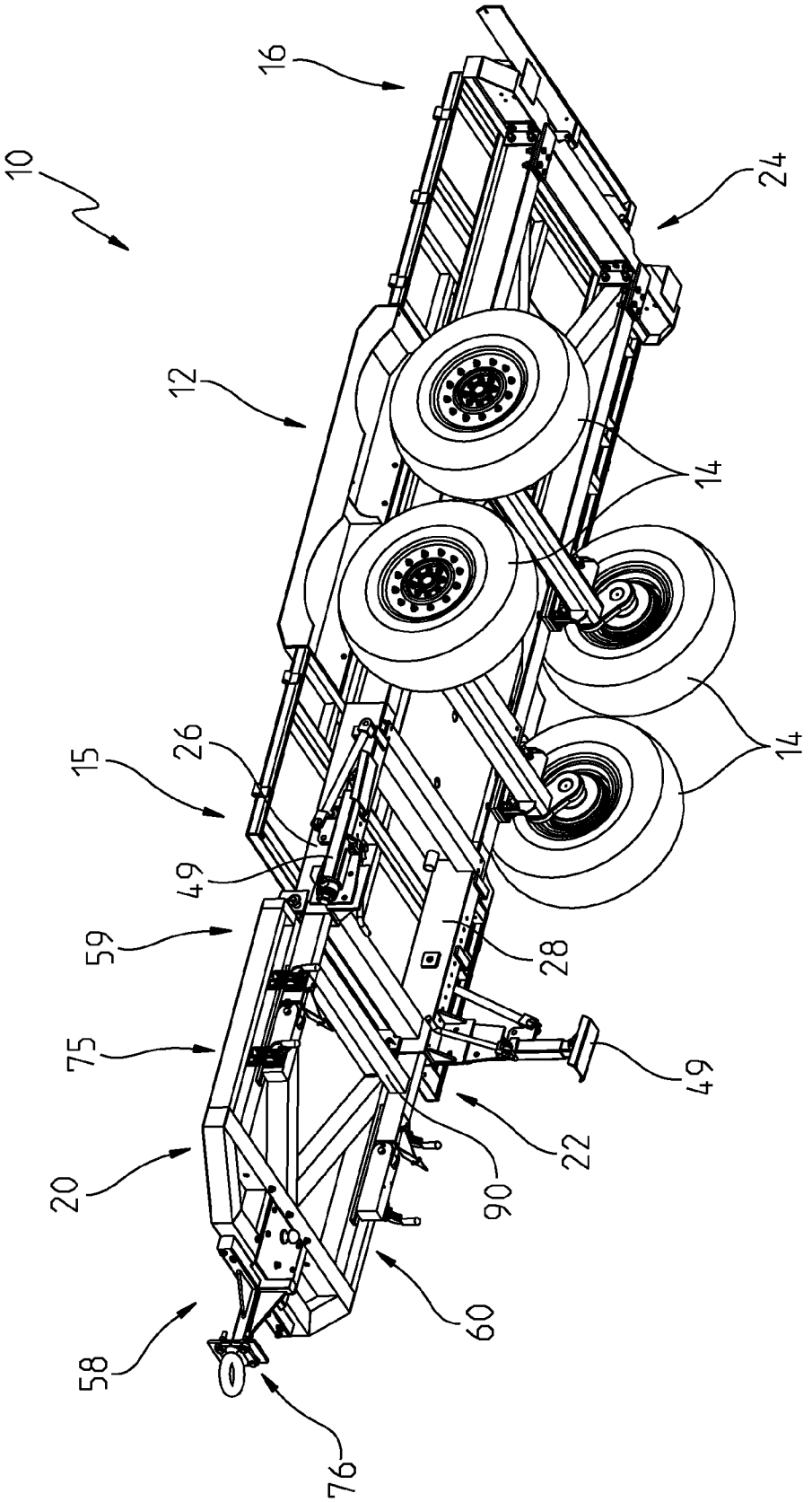

FIG. 11

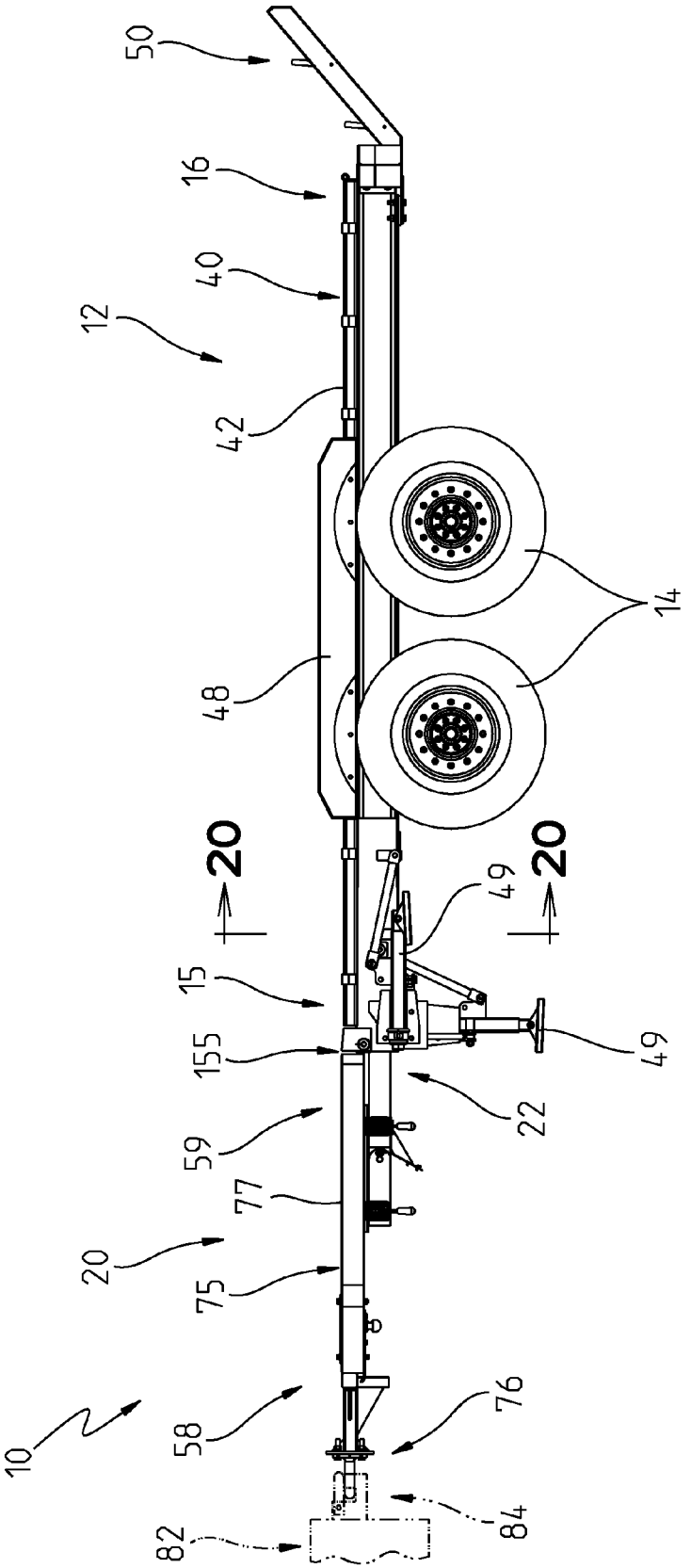

FIG. 12

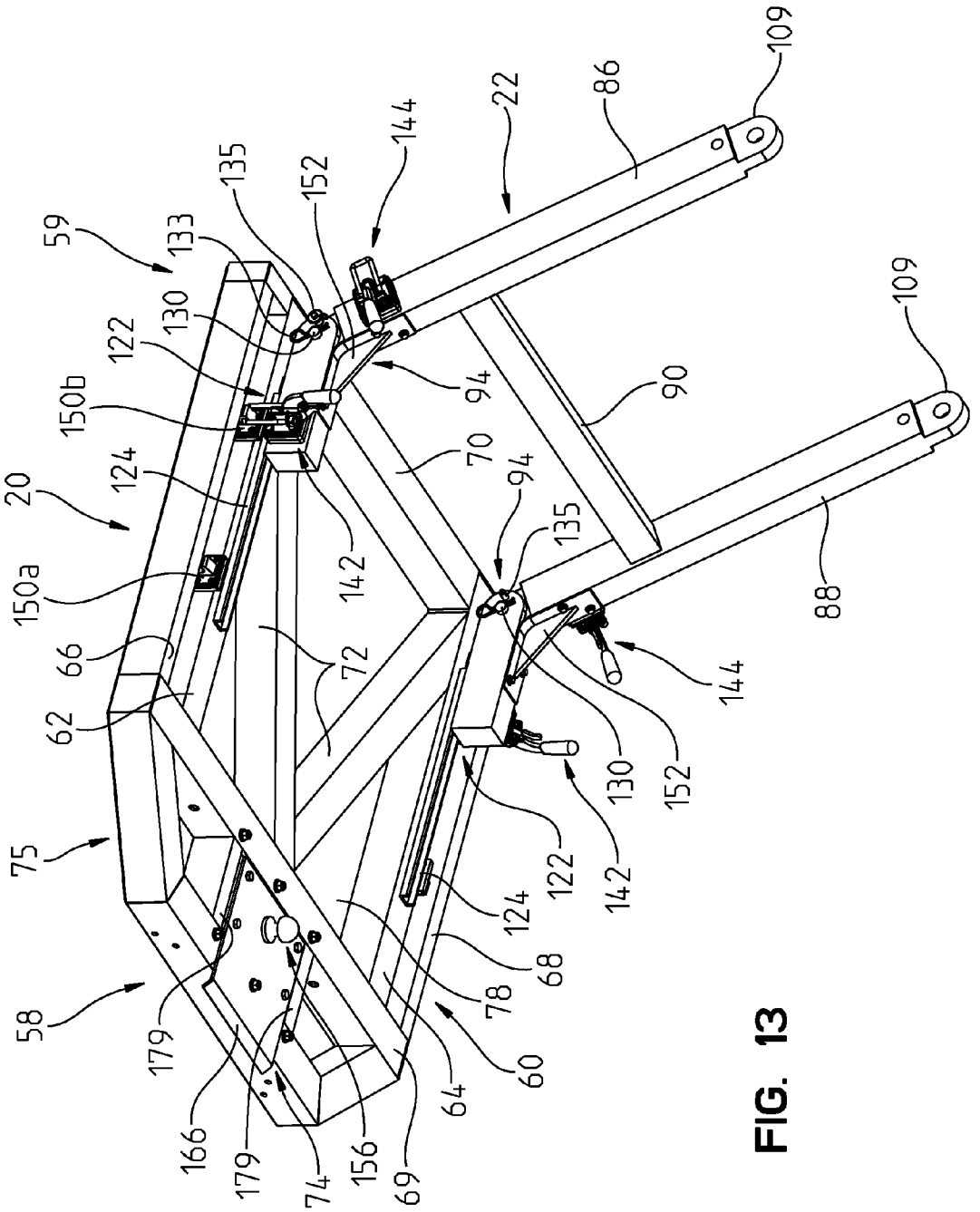
109
86
22
144
152
135
133
59
130
122
150b
124
20
150a
66
62
75
58
179
166
179
74
156
69
64
60
78
68
124
122
142
130
152
144
88
109
90
94
70
94
135
142
72

FIG. 13

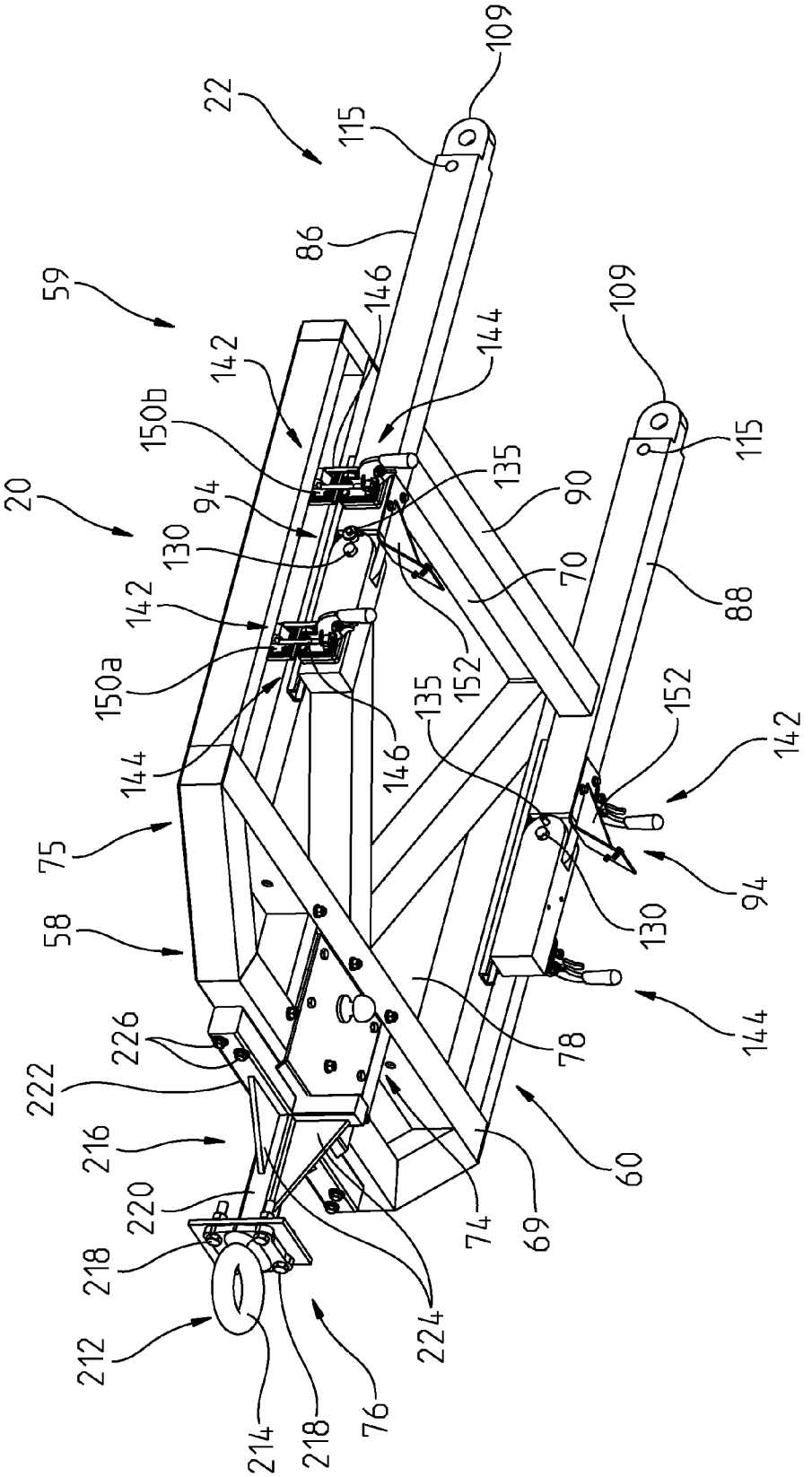
22
109
115
86
59
146
142
144
150b
135
90
20
94
130
70
88
142
150a
152
135
152
144
146
142
75
94
58
130
78
144
226
222
216
60
220
74
69
218
224
212
214
218
76

FIG. 14

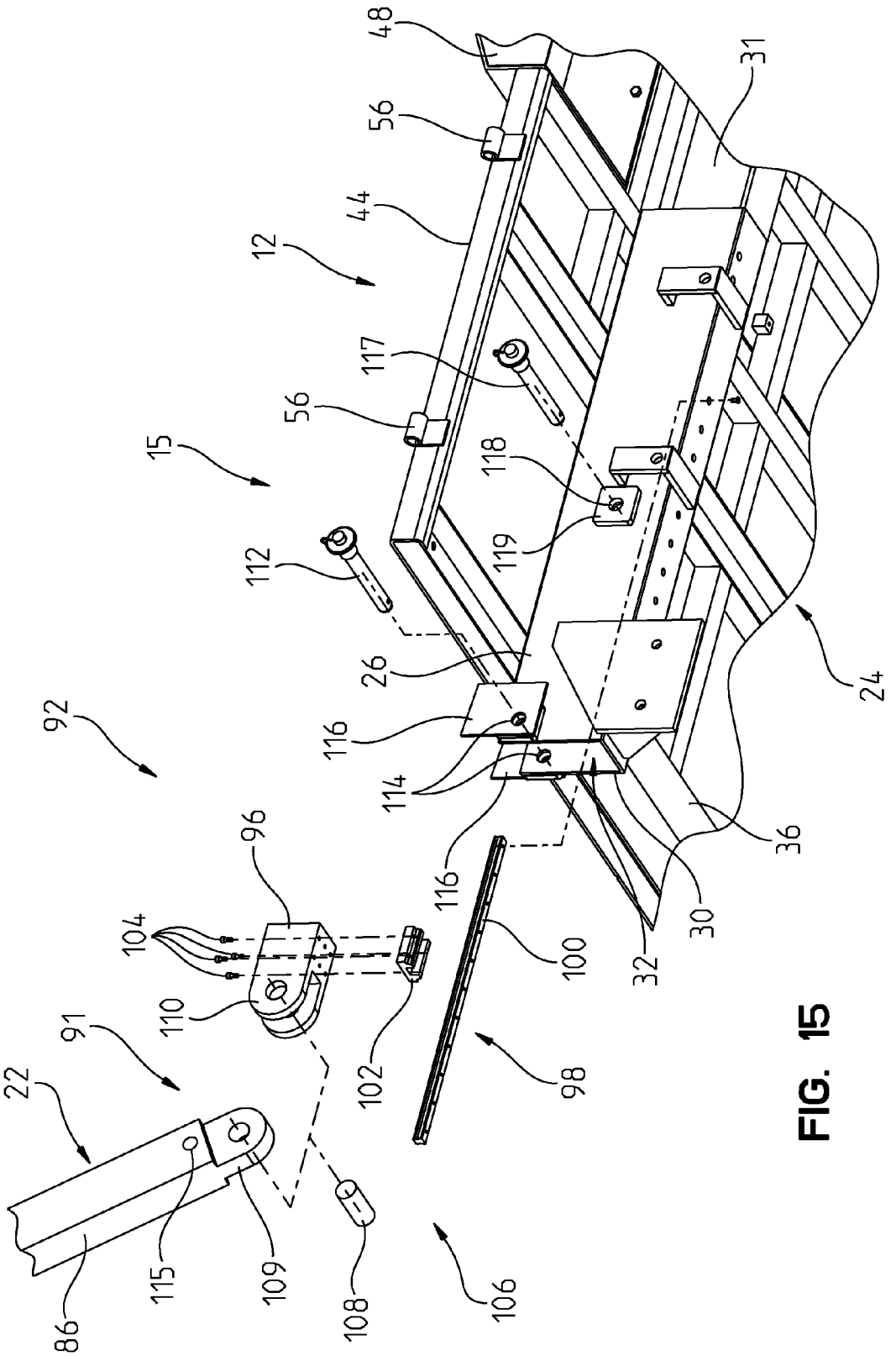
48
56
44
12
31
117
56
15
118
119
112
26
24
92
116
114
116
36
30
32
96
104
100
110
102
91
98
22
115
109
108
106
86

FIG. 15

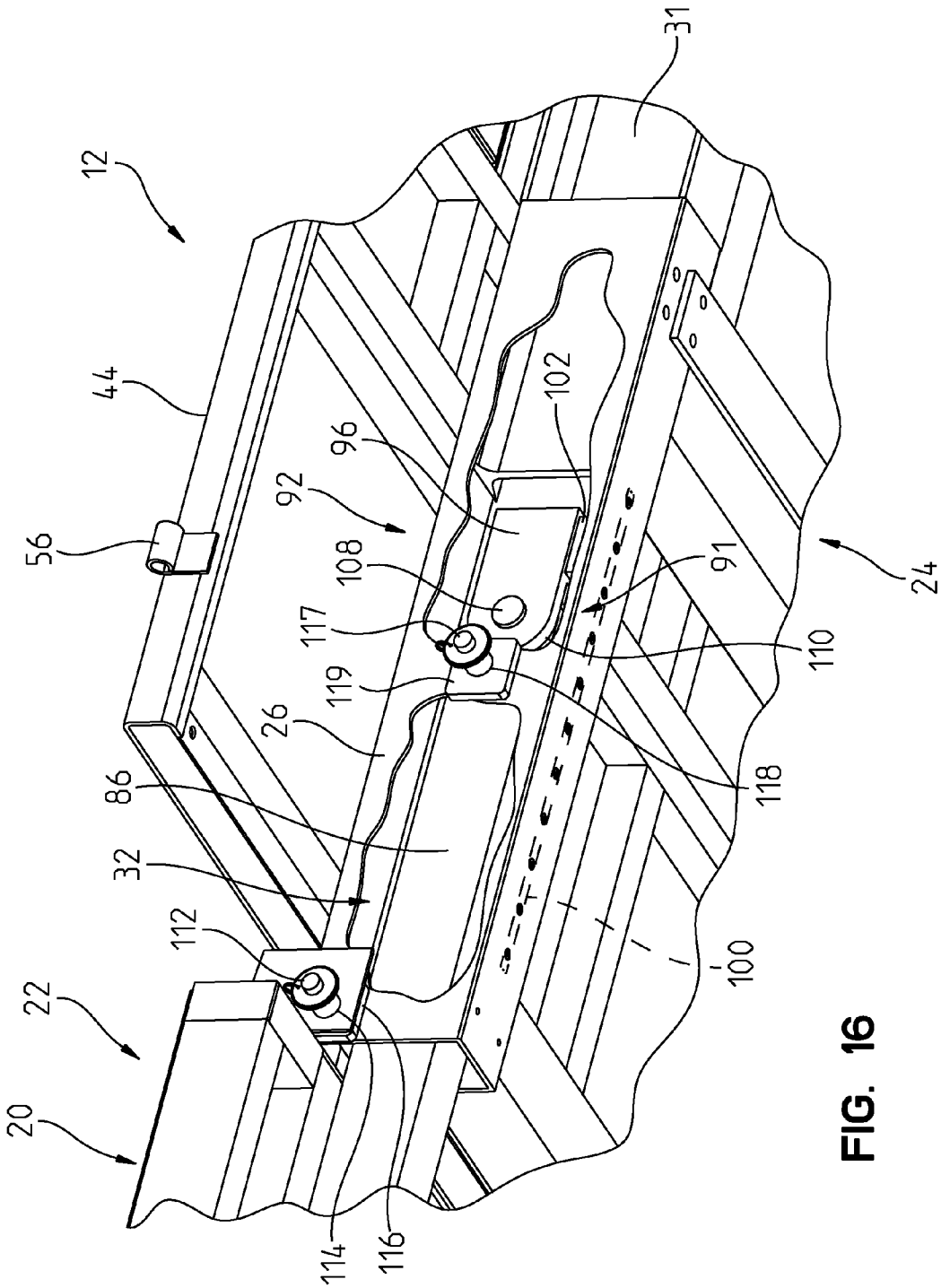
31
12
44
102
96
92
56
108
91
24
117
110
119
26
118
86
32
112
100
22
20
114
116

FIG. 16

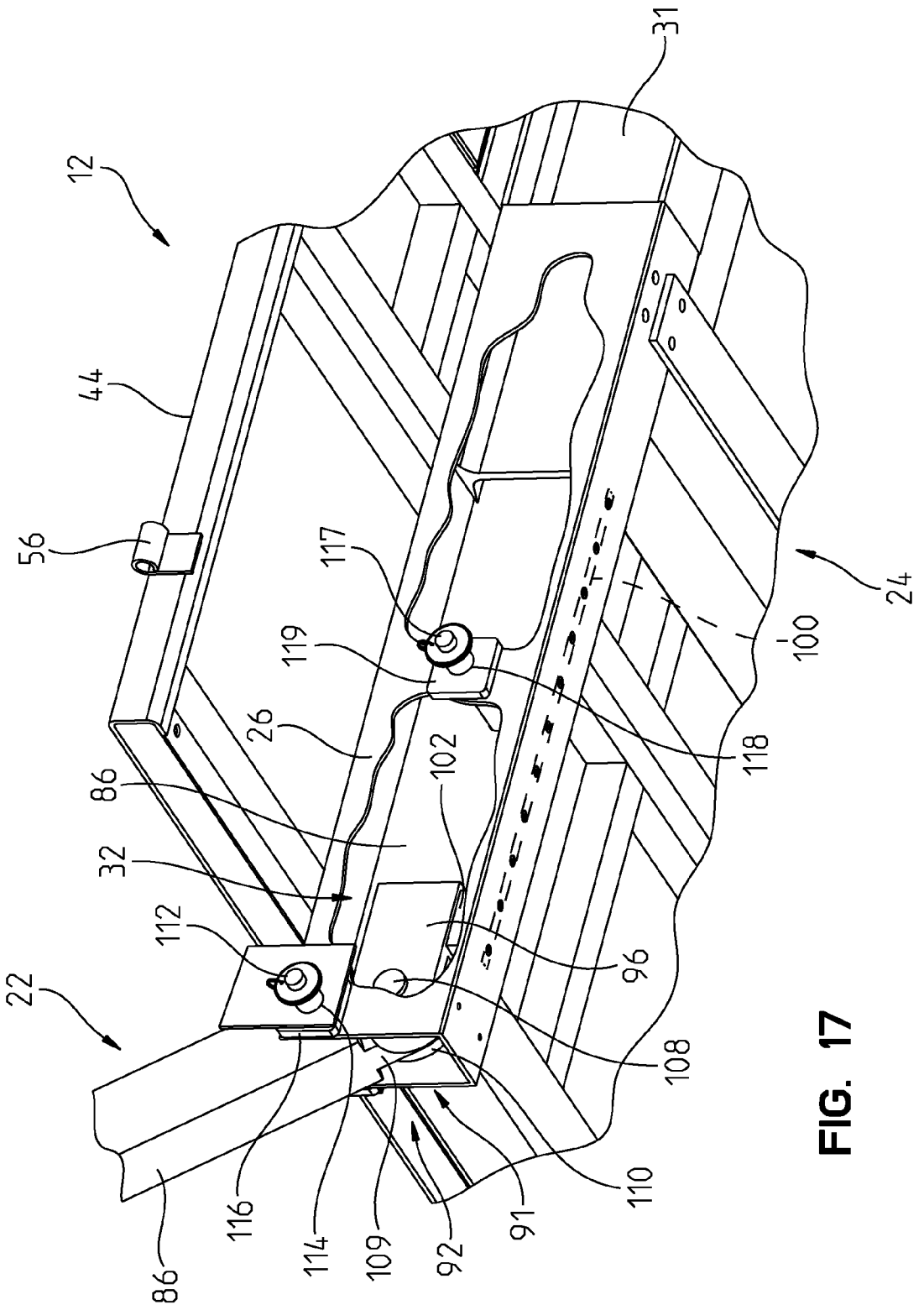
12
31
44
56
117
119
26
86
32
112
22
102
96
108
110
91
92
109
114
116
86
118
100
24

FIG. 17

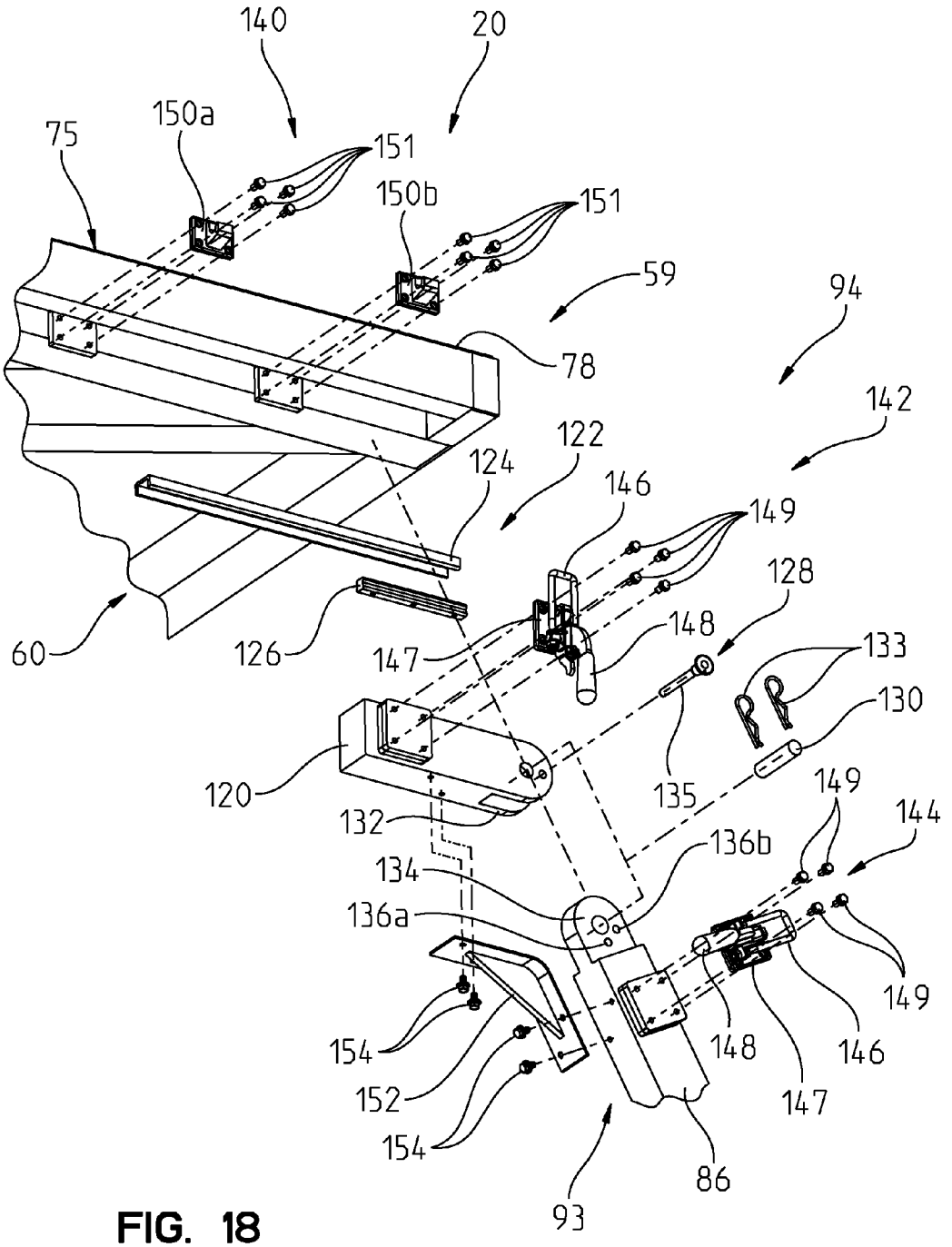
140
20
150a
75
151
150b
151
59
94
78
142
122
124
146
149
128
60
126
147
148
133
130
120
135
132
149
144
136b
134
136a
149
154
148
146
152
147
154
86
93

FIG. 18

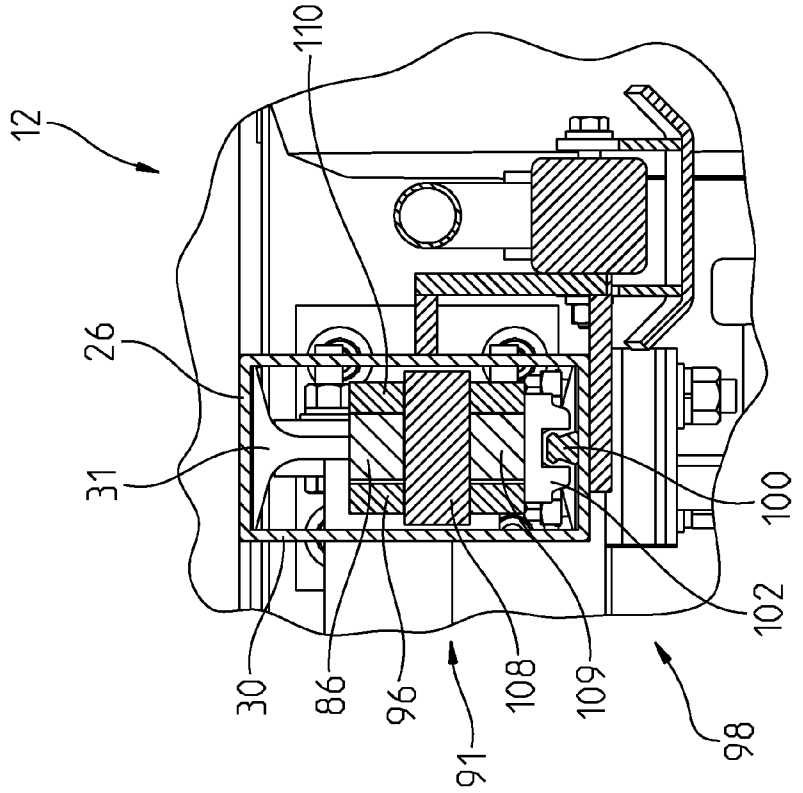
12
110
26
31
30
86
96
91
108
109
98
102
100

FIG. 20

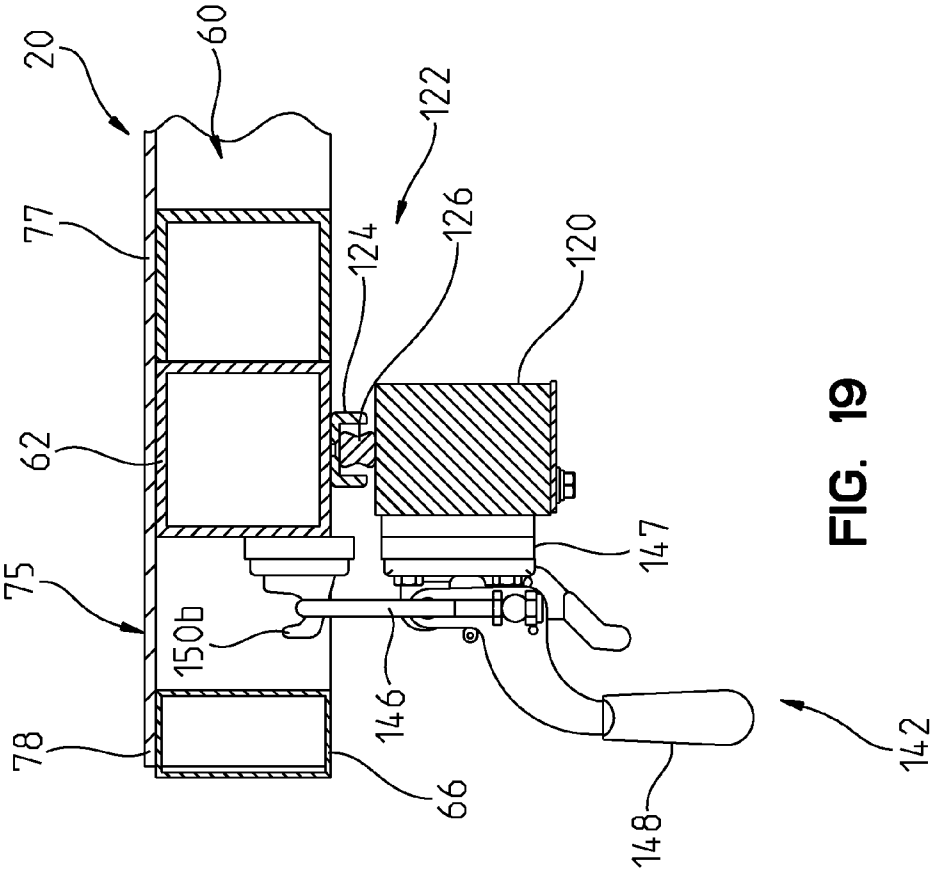
20
60
77
62
75
150b
78
66
122
124
126
120
147
146
148
142

FIG. 19

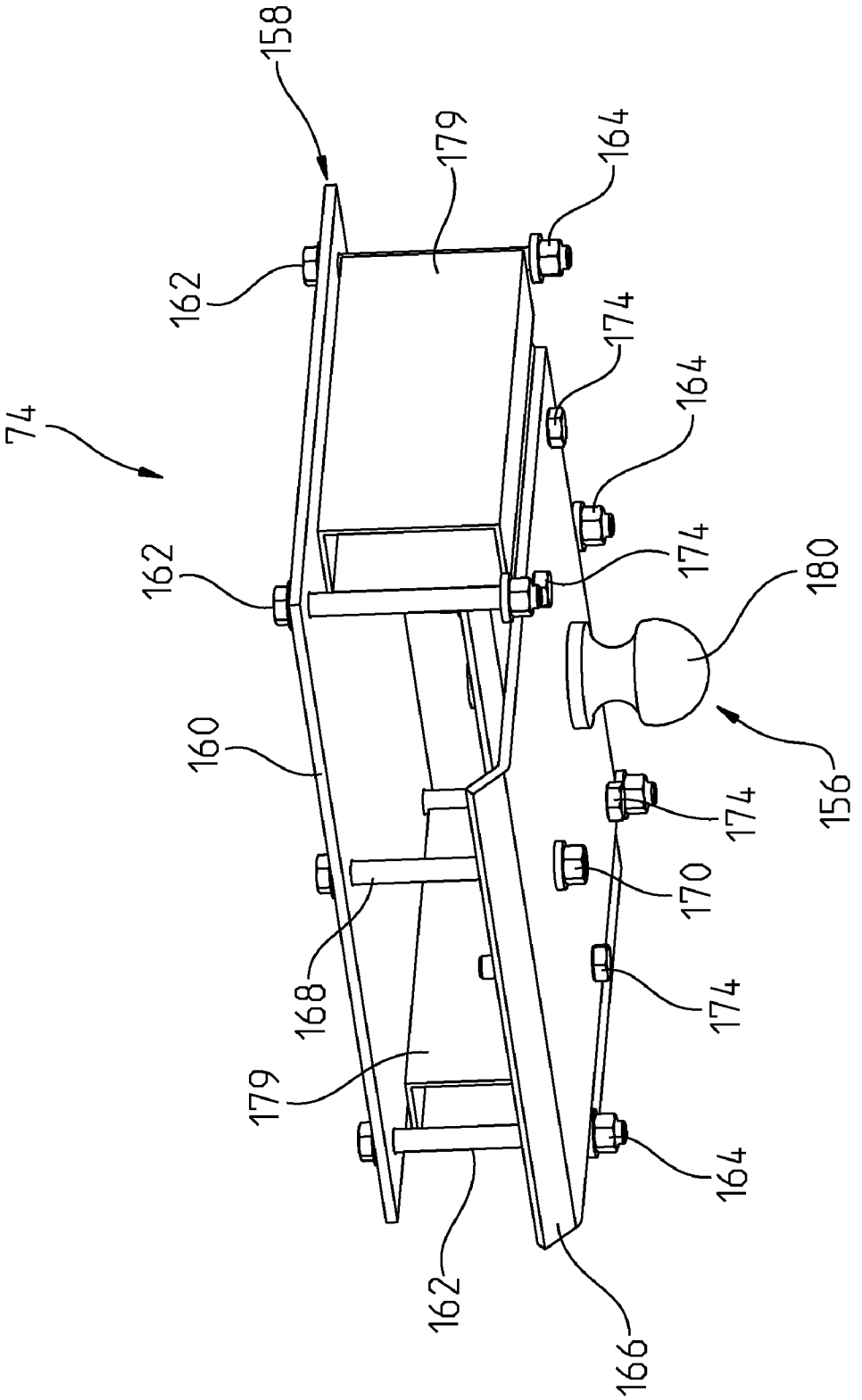
158
179
164
162
174
74
164
162
174
180
160
174
156
170
168
174
179
164
162
166

FIG. 21

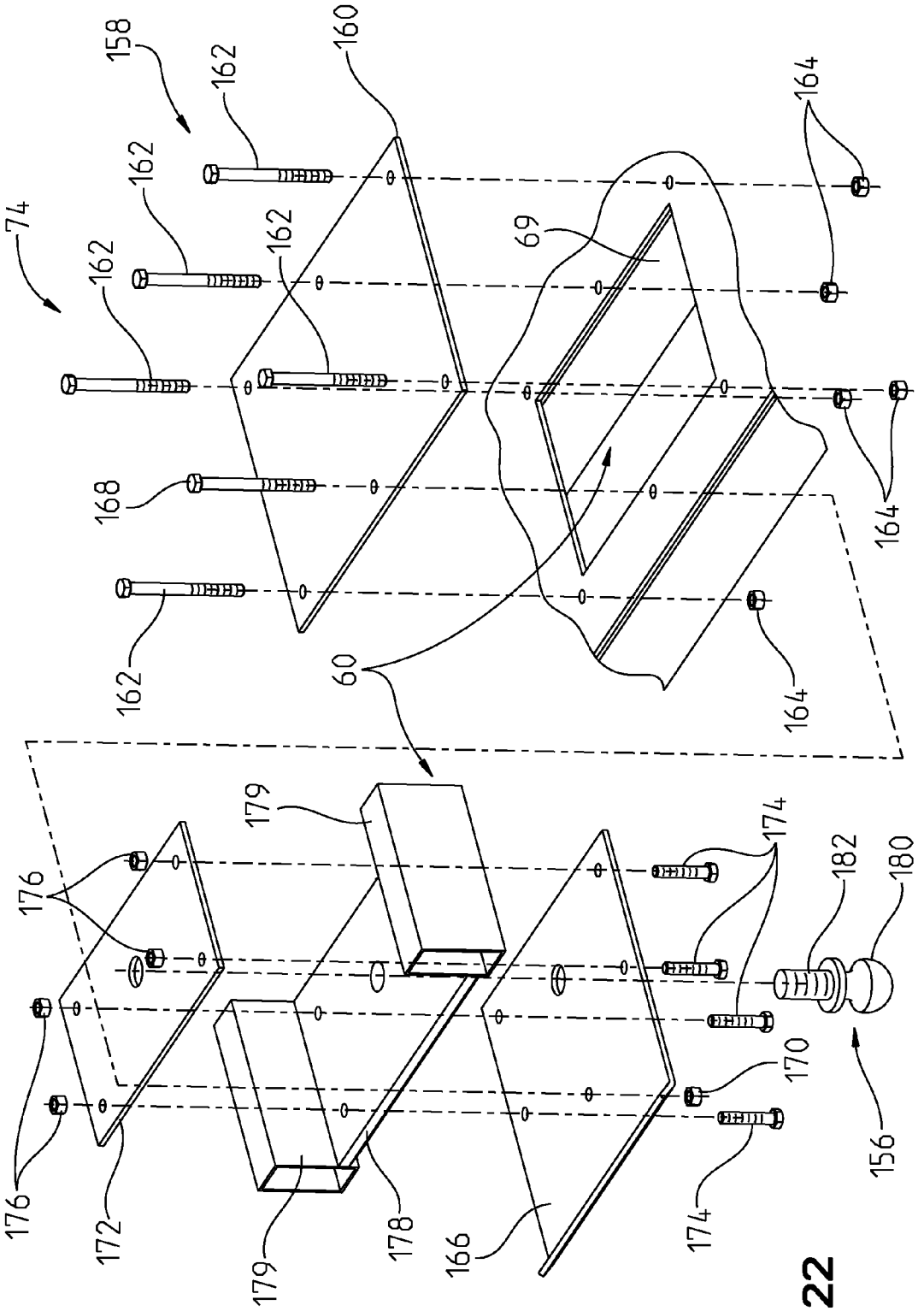
74
158
162
160
164
69
168
60
179
176
174
182
180
170
156
172
178
166

FIG. 22

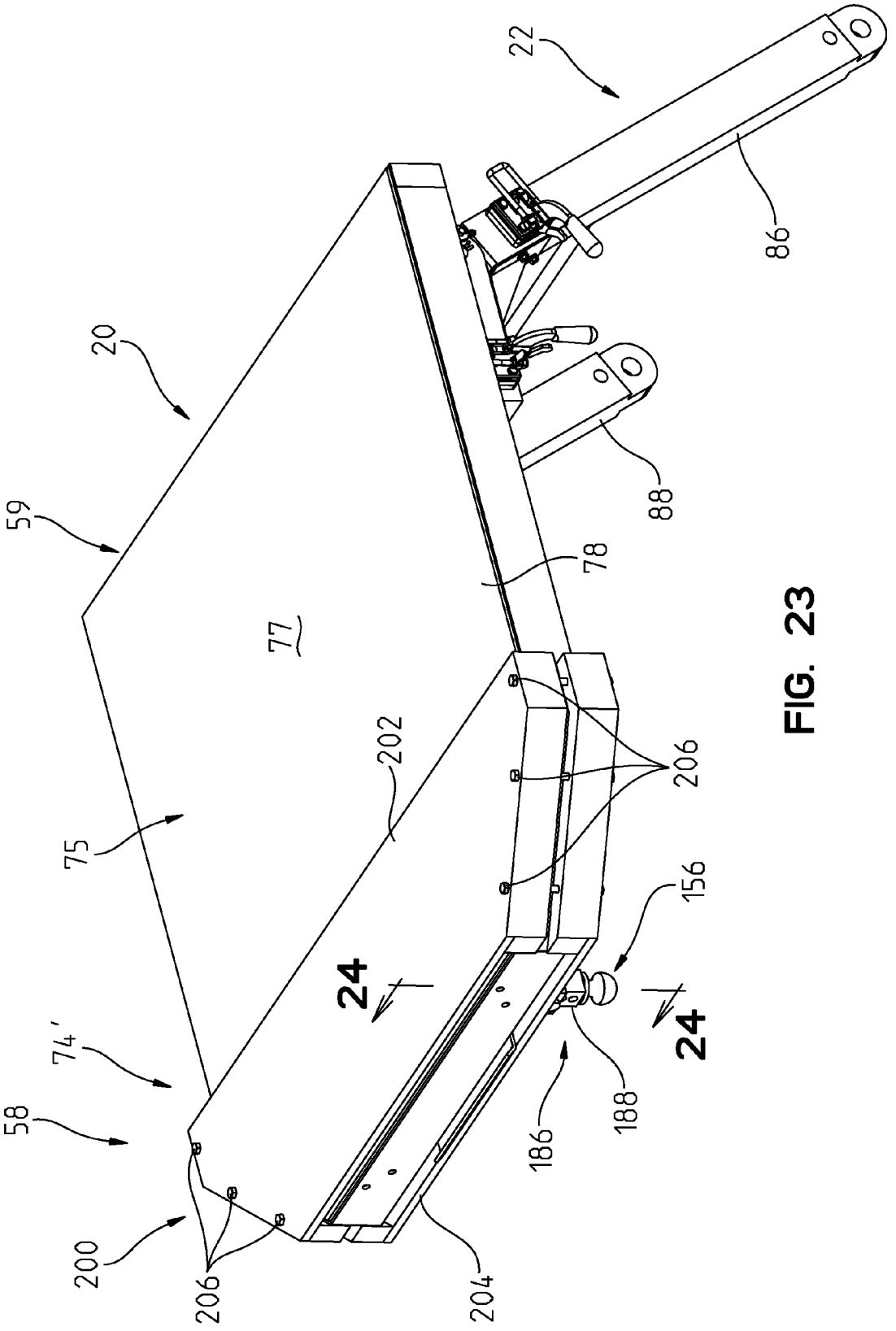

FIG. 23

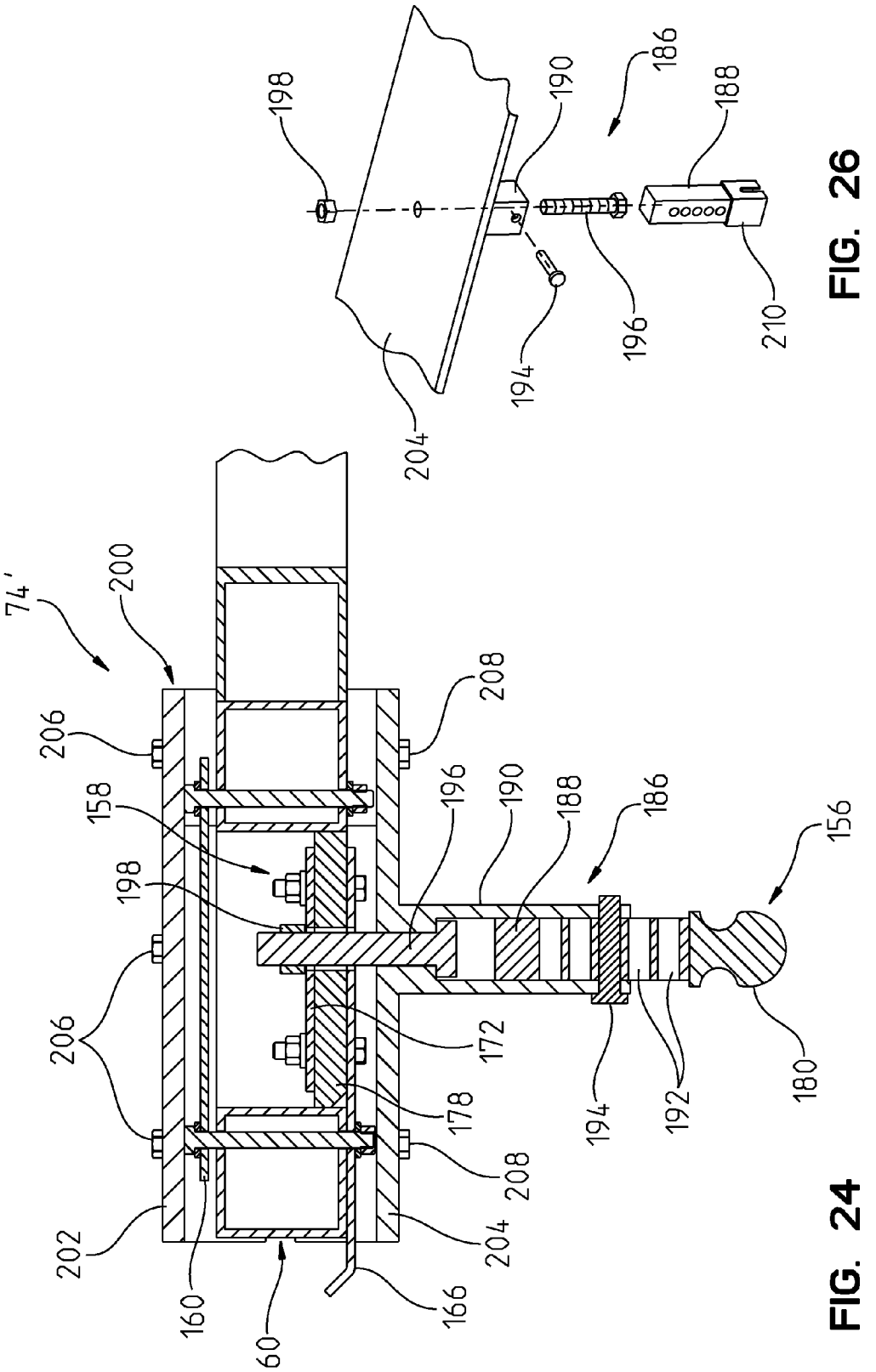
198
190
186
188
196
194
210
204
74'
200
208
206
158
198
196
190
188
186
156
206
172
178
194
192
180
208
202
204
160
60
166

FIG. 26

FIG. 24

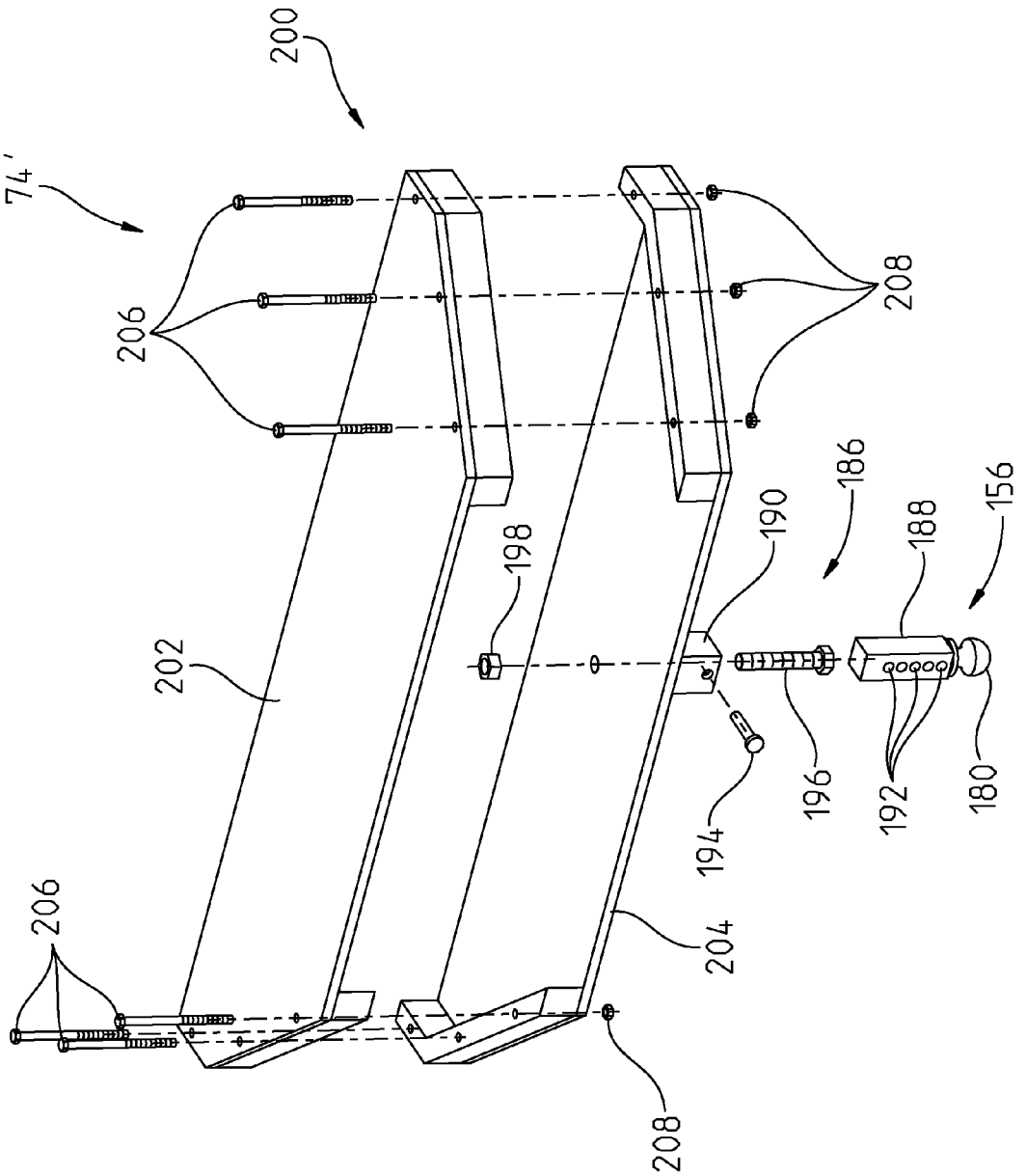
200
74'
206
208
186
156
198
190
188
202
196
192
180
194
206
204
208

FIG. 25

CONVERTIBLE TRAILER

STATEMENT REGARDING FEDERALLY SPONSORED RESEARCH OR DEVELOPMENT

The invention described herein was made in the performance of official duties by an employee of the Department of the Navy and may be manufactured, used and licensed by or for the United States Government for any governmental purpose without payment of any royalties thereon.

BACKGROUND AND SUMMARY OF THE DISCLOSURE

The present invention relates generally to trailers and, more particularly, to trailers that may be converted for use with different towing hitch arrangements.

Different types of hitches are known for towing trailers behind vehicles. For example, pintle hitches (sometimes called bumper tow or tag-along hitches) typically use a pin or ball proximate the rear bumper of a towing vehicle to interlock with a receiver on the trailer to be towed. Another commonly used trailer hitch is a fifth-wheel type trailer hitch, often supported within the bed of a pick-up truck, which better distributes the load from the trailer over the real axle of the towing truck.

The present disclosure provides for a universal or convertible trailer that may be reconfigured for use with different towing hitch configurations. For example, the trailer may be converted between a pintle configuration and a fifth-wheel configuration.

According to an illustrative embodiment of the present disclosure, a trailer includes a first deck having a support platform, a front end and a rear end. A plurality of movable ground engaging members supports the first deck. A second deck includes a support platform and is operably coupled to the first deck. An adjustable neck includes an arm having a first end operably coupled to the front end of the first deck and a second end operably coupled to the second deck. The adjustable neck is configured to support the second deck substantially level with the first deck in a pintle configuration and to support the second deck above the first deck in a fifth-wheel configuration. A first coupling includes a first pivot pin connecting the first end of the arm of the adjustable neck with the first deck, and a first pivot lock to rotatably secure the arm of the adjustable neck in position relative to the first deck. The first coupling may further include a linear slide supporting the first end of the arm of the adjustable neck for sliding movement relative to the first deck. A first slide lock is illustratively provided for securing the first end of the arm of the adjustable neck from sliding movement relative to the first deck. A second coupling illustratively includes a second pivot pin connecting the second end of the arm of the adjustable neck to the second deck, and a second pivot lock to rotatably secure the arm of the adjustable neck in position relative to the second deck. The second coupling may further include a linear slide supporting the second end of the arm of the adjustable neck for sliding movement relative to the second deck. A second slide lock is illustratively provided for securing the second end of the arm of the adjustable neck from sliding movement relative to the second deck. Illustratively, a pintle hitch adapter is coupled to second deck in the pintle configuration. The pintle hitch adapter includes a receiver configured to couple with a pintle of a towing vehicle. Illustratively, a fifth wheel adapter is coupled to the second deck in the fifth wheel configuration. The fifth wheel hitch adapter includes a king pin configured to couple with a fifth wheel hitch of a towing vehicle.

Further illustratively, the support platform of the first deck and the support platform of the second deck define a substantially continuous planar support surface when the second deck is in the pintle configuration. The first slide lock illustratively comprises a locking pin offset from the first pivot pin and configured to couple the arm of the adjustable neck to the first deck. The second slide lock illustratively comprises a first clamp including a hook, a pivotable handle operably coupled to the hook, and a latch fixed to the second deck and configured to releasably couple with the hook. Further illustratively, the first deck includes a longitudinally extending frame member defining a channel and supporting the support platform, wherein the first end of the arm of the adjustable neck is configured to be telescopingly received within the channel of the longitudinally extending member.

According to a further illustrative embodiment of the present disclosure, a method of converting the towing configuration of a trailer includes the steps of providing a main deck, coupling a coupler support to the main deck by an arm of an adjustable neck, and positioning the arm of the adjustable neck such that the coupler support is substantially level with the main deck, thereby defining a pintle configuration. The method further includes the steps of coupling a pintle hitch adapter to the coupler support in the pintle configuration, wherein the pintle hitch adapter includes a receiver configured to couple with the pintle of a towing vehicle. The method further includes the step of positioning the arm of the adjustable neck such that the coupler support is above the main deck, thereby defining a fifth wheel configuration. The method also includes the step of coupling a fifth wheel hitch adapter to the coupler support in the fifth wheel configuration, wherein the fifth wheel hitch adapter includes a king pin configured to couple with a fifth wheel hitch of a towing vehicle.

Additional features and advantages of the present invention will become apparent to those skilled in the art upon consideration of the following detailed description of the illustrative embodiment exemplifying the best mode of carrying out the invention as presently perceived.

BRIEF DESCRIPTION OF THE DRAWINGS

The foregoing aspects and many of the attendant advantages of this invention will become more readily appreciated as the same become better understood by reference to the following detailed description when taken in conjunction with the accompanying drawings.

FIG. **1** is a perspective view of a trailer according to an illustrative embodiment of the present disclosure, with the coupler support elevated to define a fifth wheel configuration;

FIG. **2** is a bottom perspective view of the trailer of FIG. **1**;

FIG. **3** is a side elevational view of the trailer of FIG. **1**;

FIG. **4** is a front end view of the trailer of FIG. **1**;

FIG. **5** is a rear end view of the trailer of FIG. **1**;

FIG. **6** is top perspective view of the main deck of the trailer of FIG. **1**, with the support platform removed to show the frame;

FIG. **7** is a top perspective view of the trailer of FIG. **1**, showing upwardly extending panels coupled to the main deck;

FIG. **8** is a detailed exploded perspective view showing the coupling of a panel with the main deck of FIG. **7**;

FIG. **9** is a partial side elevational view of the trailer of FIG. **1**, showing an adjustment position of the coupler support intermediate the elevated fifth wheel configuration and the lowered pintle configuration;

FIG. **10** is a top perspective view of the trailer of FIG. **1**, with the coupler support lowered to define a pintle configuration;

FIG. **11** is a bottom perspective view of the trailer of FIG. **10**;

FIG. **12** is a side elevational view of the trailer of FIG. **11**;

FIG. **13** is a detailed lower perspective view of the coupler support and adjustable neck of the trailer of FIG. **1** in the fifth wheel configuration;

FIG. **14** is a detailed lower perspective view of the coupler support and adjustable neck of FIG. **10** in the pintle configuration;

FIG. **15** is a detailed exploded perspective view showing the coupling between the adjustable neck and the main deck of the trailer of FIG. **1**;

FIG. **16** is a detailed perspective view, with a partial cutaway, of the coupling between the adjustable neck and the main deck in the pintle configuration;

FIG. **17** is a detailed perspective view, with a partial cutaway, similar to FIG. **16** in the fifth wheel configuration;

FIG. **18** is a detailed exploded perspective view of the coupling between the adjustable neck and the coupler support;

FIG. **19** is a partial cross-sectional view taken along line **19-19** of FIG. **3**;

FIG. **20** is a cross-sectional view taken along line **20-20** of FIG. **12**;

FIG. **21** is a perspective view of an illustrated fifth wheel hitch adapter for use with the trailer of FIG. **1**;

FIG. **22** is an exploded perspective view of the fifth wheel hitch adapter of FIG. **21**;

FIG. **23** is a top perspective view of the coupler support and adjustable neck of FIG. **1**, showing a further illustrative fifth wheel hitch adapter coupled to the coupler support;

FIG. **24** is a cross-sectional view taken along line **24-24** of FIG. **23**;

FIG. **25** is an exploded perspective view of the fifth wheel hitch adapter of FIG. **23**; and

FIG. **26** is a perspective view of a further illustrative fifth wheel hitch adapter.

Corresponding reference characters indicate corresponding parts throughout the several views. Although the drawings represent embodiments of various features and components according to the present disclosure, the drawings are not necessarily to scale and certain features may be exaggerated in order to better illustrate and explain the present disclosure. The exemplification set out herein illustrates embodiments of the invention, and such exemplifications are not to be construed as limiting the scope of the invention in any manner.

DETAILED DESCRIPTION OF THE DRAWINGS

For the purposes of promoting an understanding of the principles of the invention, reference will now be made to the embodiments illustrated in the drawings, which are described below. The embodiments disclosed below are not intended to be exhaustive or limit the invention to the precise form disclosed in the following detailed description. Rather, the embodiments are chosen and described so that others skilled in the art may utilize their teachings. It will be understood that no limitation of the scope of the invention is thereby intended. The invention includes any alterations and further modifications in the illustrated devices and described methods and further applications of the principles of the invention which would normally occur to one skilled in the art to which the invention relates.

Referring initially to FIGS. **1-5**, an illustrative universal or convertible trailer **10** of the present disclosure is shown as including a main or first deck **12** supported by a plurality of movable ground engaging members, illustratively rotatable wheels **14**, positioned intermediate opposing front and rear ends **15** and **16**. The wheels **14** may include rotatable hubs **17** supporting tires **18**. A coupler support, illustratively a second deck **20**, is operably coupled to the front end **15** of the main deck **12** through an adjustable neck **22**. The adjustable neck **22** is configured to convert or reposition the coupler support **20** from between a fifth wheel configuration (FIGS. **1-5** and **13**) and a pintle configuration (FIGS. **10-12** and **14**).

As shown in FIGS. **6** and **15**, the main deck **12** illustratively includes a frame **24** having first and second laterally spaced, longitudinally extending base beams **26** and **28**. The longitudinally extending base beams **26** and **28** are each illustratively formed of aluminum, and include a tubular portion **30** defining a longitudinally extending channel **32**. The tubular portion **30** is illustratively fixed to an I-beam **31**, for example, through welding. With further reference to FIG. **6**, a plurality of laterally extending cross members **34** are fixed, illustratively through welding, to an upper surface of the longitudinally extending base beams **26** and **28**. A pair of diagonally extending braces **35** extend between the longitudinally extending base beams **26** and **28**. A strut **36** extends between the base beams **26** and **28** proximate the front end **15**, while a bumper **38** is secured to the base beams **26** and **28** proximate the rear end **16**.

Referring to FIGS. **1** and **10**, a support platform **40** including an upper surface **42** is illustratively defined by a plurality of deck panels **44** secured the frame **24**. The deck panels **44** are illustratively formed of sheet metal, such as aluminum plate, secured to the frame **24** through conventional means, such as sheet metal screws **46**. Fenders **48** are illustratively supported above the wheels **14** and are coupled to the frame **24**.

A pair of legs **49** are pivotally coupled to the frame **24** for movement between raised and lowered positions (both positions are shown in the figures for illustrative purposes). In the lowered position, the legs **49** support the front end **15** of the main deck **12**. In the raised position, the legs **49** are stowed so as to not interfere with the movement of the trailer **10** when being pulled by a towing vehicle.

A ladder **50** is coupled to the rear end **16** of the main deck **12**. More particularly, the ladder **50** includes laterally spaced stringers **52** supporting a plurality of rungs or steps **53**. The stringers **52** are pivotally supported by the rear bumper **38** of the frame **24**. As such, the ladder **50** may be pivoted between a raised, stowed position and a lowered, use position.

With reference to the illustrative embodiment of FIGS. **7** and **8**, a plurality of upwardly extending panels or guards **54** may be coupled to the main deck **12**. The guards **54** are removably coupled to the frame **24** of the main deck **12** through pins **55** slidably received within brackets **56** (FIG. **8**). Illustratively, the brackets **56** may be welded to the deck panels **44** coupled to the frame **24**.

With reference to FIGS. **13** and **14**, the coupler support **20** illustratively includes a frame **60** extending between opposing front and rear ends **58** and **59**. The frame **60** illustratively includes laterally spaced, longitudinally extending inner base beams **62** and **64** and outer base beams **66** and **68** coupled to a pair of longitudinally spaced, laterally extending cross members **69** and **70**. A pair of diagonal braces **72** extend between the cross member **69** and the inner beams **62** and **64**.

The coupler support **20** is configured to support different types of hitch adapters. For example, the coupler support **20** may support a fifth wheel hitch adapter **74** (FIGS. **2** and **13**) and/or a pintle hitch adapter **76** (FIGS. **10** and **14**).

A support platform **75** including an upper surface **77** is illustratively defined by a panel **78** secured to the frame **60** of the coupler support **20**. The panel **78** is illustratively formed of sheet metal, such as aluminum plate, secured to the frame **60** through conventional means, such as welding or fasteners. As shown in FIGS. **10** and **12**, the upper surfaces **42** and **77** of support platforms **40** and **75**, respectively, are substantially aligned in the same plane when the coupler support **20** is in the lowered pintle configuration.

As noted above, the adjustable neck **22** is configured to move the coupler support **20** between various positions to accommodate different hitch arrangements. More particularly, the adjustable neck **22** is configured to move the coupler support **20** from between the fifth wheel configuration shown in FIGS. **1-5** and **13**, and the pintle configuration shown in FIGS. **10-12** and **14**. In the fifth wheel configuration, the fifth wheel hitch adapter **74** is configured to couple with a fifth wheel hitch **80** of a towing vehicle **82** (FIG. **3**). Fifth wheel hitch **80** may be of any known design, and typically includes receiving jaws to secure a king pin therebetween. In the pintle configuration, the pintle hitch adapter **76** is configured to couple with a pintle hitch **84** of towing vehicle **82** (FIG. **12**). Pintle hitch **84** may be of any known design, and typically includes a pin or hook cooperating with a clamp to secure a receiver thereto.

With reference to FIGS. **2**, **4**, **9**, **13**, and **14**, the adjustable neck **22** illustratively includes laterally spaced first and second arms **86** and **88** extending between the front end **15** of the main deck **12** and the rear end **59** of the coupler support **20**. A brace **90** extends between the arms **86** and **88** to provide additional strength and stability to the adjustable neck **22**. To facilitate conversion of the trailer **10**, each arm **86** and **88** includes a first end **91** coupled to the front end **15** of the main deck **12** via a first coupling **92**, and a second end **93** coupled to the rear end **59** of the coupler support **20** by a second coupling **94**.

In the following description, reference may be made to the first arm **86** of the adjustable neck **22** in connection with the first and second couplings **92** and **94**, respectively. It should be noted that the second arm **88**, and its association with the main deck **12** and the coupler support **20**, is substantially identical to the first arm **86**.

With reference to FIGS. **15-17**, the first coupling **92** is configured to provide both pivoting and sliding movement of the first end **91** of the arm **86**, **88** relative to the main deck **12**. Illustratively, the first coupling **92** includes a support block **96** supported for linear sliding movement in a longitudinal direction relative to frame **24** of the main deck **12**. More particularly, the support block **96** is supported by a linear slide **98** received within the channel **32** of the longitudinally extending beam **26**, **28**. The linear slide **98** illustratively includes a rail **100** guiding a carriage **102**. The support block **96** is illustratively coupled to the carriage **102** through conventional fasteners, such as screws **104** (FIG. **15**).

A pivot coupling **106** is defined between the support block **96** and the arm **86**, **88** of the adjustable neck **22**. More particularly, a pivot pin **108** couples a tab **109** at the first end **91** of the arm **86**, **88** of the adjustable neck **22** to a clevis **110** formed by the support block **96**. A pivot lock in the form of a quick release pin **112** illustratively extends through openings **114** in the beam **26**, **28** and opening **115** within the arm **86**, **88**. The pivot lock pin **112** may comprise a conventional ball detent pin. Reinforcing plates **116** may be welded to the beam **26**, **28** for additional support for the pin **112**. The plates **116** are illustratively welded to opposing sides of the tubular portion **30** of the beam **26**, **28** for dampening stress due to forces applied by the pin **112**. Opening **115** within arm **86**, **88** is illustratively offset from the pivot pin **108** to lock the arm **86**, **88** in the elevated fifth wheel configuration (FIG. **17**).

As shown by FIGS. **16** and **17**, the first end of the arm **86**, **88** is slidably received within the channel **32** defined by the longitudinally extending beam **26**, **28** of the main deck **12**. A slide lock in the form of a quick release pin **117** is configured to secure the support block **96** from sliding when the arm **86**, **88** is in the lowered pintle configuration (FIG. **16**). The slide lock pin **117** extends through openings **118** in the beam **26**, **28** and opening **115** in the arm **86**, **88**, respectively, to prevent sliding movement of the support block **96** along linear slide **98**. The slide lock pin **117** may comprise a conventional ball detent pin.

Since the arms **86** and **88** are configured to be telescopingly received within the tubular portions **30** of the beams **26** and **28**, they provide additional support and structural strength to the frame **24** of the main deck **12** in the pintle configuration (i.e., when retracted within the channel **32** as shown in FIG. **16**). Reinforcing plates **119** may be welded to the beam **26**, **28** for additional support for the pin **117**. The plates **119** are illustratively welded to opposing sides of the tubular portion **30** of the beam **26**, **28** for dampening stress due to forces applied by the pin **117**.

Referring now to FIGS. **3**, **18** and **19**, the second coupling **94** is configured to provide both pivoting and sliding movement of the coupler support **20** relative to the second end **93** of the arm **86**, **88**. Illustratively, the second coupling **94** includes a support block **120** supported by a linear slide **122**. The linear slide **122** may include a rail **124** guiding a carriage **126**. The support block **120** may be secured to the carriage **126** through conventional fasteners (not shown). The support block **120** is coupled to the second end **93** of the arm **86**, **88** of the adjustable neck **22** at a pivot coupling **128**.

With further reference to FIG. **18**, the pivot coupling **128** is illustratively defined by a pivot pin **130** extending through a clevis **132** formed by the support block **120** and a tab **134** of the arm **86**, **88**. Cotter pins **133** may be used to retain the pin **130** within the support block **120** and arm **86**, **88**. A pivot lock in the form of a pin **135** extends through one of a pair of openings **136***a* and **136***b* offset from the pivot pin **130** to rotatably lock the arm **86**, **88** relative to the support block **120** and therefore the coupler support **20**. The pivot lock pin **135** extends through opening **136***a* to prevent pivoting movement of the arm **86**, **88** relative to the coupler support **20** in the lowered pintle configuration, and extends through opening **136***b* to prevent pivoting movement of the arm **86**, **88** relative to the coupler support **20** in the raised fifth wheel configuration. The pivot lock pin **135** may comprise a conventional ball detent pin.

A slide lock **140** is provided to prevent sliding movement of the coupler support **20** relative to the support block **120**, and hence relative to the adjustable neck **22**. Illustratively, the slide lock **140** comprises a first clamp **142** disposed on a first side of the pivot coupling **128** and a second clamp **144** disposed on an opposing side of the pivot coupling **128**. Each clamp **142**, **144** illustratively includes a hook **146**, and a base **147** supporting a pivotable handle or lever **148** operably coupled to the hook **146**. A latch **150** is configured to releasably couple with the hook **146**. Base **147** of the first clamp **142** is secured to the support block **120** through fasteners, such as screws **149**, while the base **147** of the second clamp **144** is secured to the arm **86**, **88** through fasteners, such as screws **149**. The latches **150** are illustratively secured to the frame **60**

of the coupler support **20** through conventional fasteners, such as screws **151**. Illustratively, the clamps **142**, **144** may comprise the type available from De-Sta-Co of Auburn Hills, Mich.

In the elevated fifth wheel hitch configuration (FIG. **13**), the first clamp **142** secures the support block **120** to the frame **60**, and the second clamp **144** is released from the frame **60**. More particularly, the latch **150***b* is coupled to the hook **146** of the first clamp **142**. In the lowered pintle configuration (FIG. **14**), the first clamp **142** secures the support block **120** to the frame **60**, and the second clamp **144** secures the second end of the arm **86**, **88** to the frame **60**. More particularly, the latch **150***a* is coupled to the hook **146** of the first clamp **142**, and the latch **150***b* is coupled to the hook **146** of the second clamp **144**.

As shown in FIG. **18**, a gusset **152** illustratively extends between the second end **93** of arm **86**, **88** of the adjustable neck **22** and the support block **120** when the adjustable neck **22** is in the elevated fifth wheel configuration. The gusset **152** is illustratively fixed in place with fasteners, such as screws **154**, and is configured to further secure the position of the arm **86**, **88** relative to the adjustable neck **22**.

Because of the slides **98** and **122** of the respective first and second couplings **92** and **94**, the support platform **75** of coupler support **20** may be moved generally parallel to the main deck **12**. More particularly, the support platform **75** may be moved from a distal position in the fifth wheel configuration of the coupler support **20** to a proximal position in the pintle configuration of the coupler support **20**. In the pintle configuration, the support platform **75** may be moved toward the proximal position adjacent the support platform **40** of the main deck **12** to reduce the gap therebetween, such that the upper surfaces **42** and **77** define a substantially continuous support surface. In one illustrative embodiment, the gap **155** intermediate the upper surfaces **42** and **77** of the support platforms **40** and **75** is no more than 3.5 inches (FIG. **10**).

With reference to FIGS. **3**, **21** and **22**, illustrative fifth wheel hitch adapter **74** includes a king pin **156** configured to couple with fifth wheel hitch **80** of a towing vehicle **82** (FIG. **3**). The king pin **156** is secured to a mounting assembly **158** fixed to the coupler support **20** (FIG. **14**). An upper mounting plate **160** is secured to the frame through fasteners, such as bolts **162** and cooperating nuts **164**. A lower mounting plate **166** is secured to the upper mounting plate **160** through a fastener, illustratively a bolt **168** and a cooperating nut **170**. A connector plate **172** is secured to the lower mounting plate **166** and to the frame **60** of the coupler support **20**. More particularly, a plurality of fasteners, illustratively bolts **174** and nuts **176** secure the lower mounting plate **166** to the connector plate **172** through a cross plate **178**. The cross plate **178** is secured to forwardly extending frame members **179**, illustratively through welding, and is sandwiched between the lower mounting plate **166** and the connector plate **172**. In turn, frame members **179** may be welded to the cross member **69** of frame **60** (FIG. **13**). The king pin **156** illustratively includes a lower end supporting a ball **180** and an upper end having external threads **182** secured to the plates **172** and **178**.

As shown in FIGS. **23-26**, a further illustrative embodiment fifth wheel hitch adapter **74'** includes an adjustment mechanism **186** is operably coupled to the king pin **156**. The adjustment mechanism **180** may include telescoping members permitting vertical movement of the king pin **156** relative to the coupler support **20**. More particularly, the king pin **156** is supported by an adjustable support **188** telescopingly received within a tubular member **190**. A plurality of openings **192** are formed within the support **188** for receiving a pin **194** to secure to vertical position of the king pin **156**. A fastener, illustratively a bolt **196** and cooperating nut **192** secure the tubular member **190** to a mounting assembly **200** fixed to the coupler support **20** (FIG. **23**).

The mounting assembly **200** includes an upper mounting plate **202** secured to a lower mounting plate **204** around the front end **58** of the coupler support **20** through a plurality of fasteners, illustratively bolts **206** and cooperating nuts **208**. The king pin **156** is further coupled to the frame **60** through the adjustable support **188** and tubular member **190**. More particularly, the bolt **196** and nut **198** secure the tubular member **184** to the plates **166**, **172**, **178** of the mounting assembly **158** detailed above.

While the king pin **156** illustratively includes a ball **180**, other coupling arrangements may be substituted therefore. For example, as shown in FIG. **26**, the king pin **156** may support a receiver or socket **210** at the lower end thereof.

As shown in FIG. **14**, the pintle hitch adapter **76** illustratively includes a receiver **212** configured to receive the pintle supported by towing vehicle **82**. The receiver **212** may comprise a loop or ring **214** coupled to an adapter **216** through conventional fasteners, such as bolts **218**. The adapter **216** may include a longitudinally extending arm **220** secured to a base **222**. A plurality of gussets **224** extend between the arm **220** and the base **222** for added strength and rigidity. The base **222** may be secured to the frame **60** of the coupler support **20** using conventional fasteners, such as bolts **226**.

In operation, the trailer **10** may be converted from between the fifth wheel configuration of FIGS. **1-5** and the pintle configuration of FIGS. **10-12** through manipulation of the adjustable neck **22**. Illustratively, the arms **86** and **88** of the adjustable neck **22** may be initially positioned such that the coupler support **20** is substantially level with the main deck **12**, thereby defining the pintle configuration. In the pintle configuration, the upper surface **42** of the main deck **12** is substantially planar with upper surface **77** of the coupler support **20**, thereby defining a substantially continuous support surface as further detailed herein.

With reference to FIGS. **10**, **11**, **14**, and **16**, in the pintle configuration the arms **86** and **88** of the adjustable neck **22** support the coupler support **20** substantially level with the main deck **12**. The first coupling **92** is retracted and secured in position within the tubular portion **30** of the beams **26** and **28** (FIG. **16**) to prevent both pivoting and sliding movement of the adjustable neck **22** relative to the main deck **12**. More particularly, the slide lock pins **117** prevent sliding movement of the arms **86** and **88** relative to the beams **26** and **28**, while the positioning of the arms **86** and **88** within tubular portion **30** along with pivot lock pins **112** prevent pivoting movement of the arms **86** and **88** relative to the beams **26** and **28**. The second coupling **94** is secured in position to prevent both pivoting and sliding movement of the coupler support **20** relative to the adjustable neck **22**. More particularly, the pivot lock pins **135** rotatably lock the arms **86** and **88** relative to the coupler support **20**, while the clamps **142** and **144** prevent sliding movement of the coupler support **20** relative to the arms **86** and **88**. With reference to FIG. **14**, the first clamps **142** secure the support blocks **120** to the frame **60**, and the second clamps **144** secure the second ends of the arms **86** and **88** to the frame **60**. More particularly, the latch **150***a* is coupled to the hook **146** of the first clamp **142**, and the latch **150***b* is coupled to the hook **146** of the second clamp **144**.

The pintle hitch adapter **76** is secured to the coupler support **20** by securing the base **222** to the frame **60** through bolts **218**. As further detailed herein, the pintle hitch adapter **76** includes a receiver, illustratively loop **214**, configured to couple with the pintle hitch **84** of towing vehicle **82**.

With reference to FIG. **9**, the arms **86** and **88** may be repositioned from the pintle configuration such that the coupler support **20** is above the main deck **12**, thereby defining the fifth wheel configuration. The step of repositioning the arm of the adjustable neck **22** such that the coupler support **20** is above the main deck **12** includes the steps of releasing the slide locks defined by the pins **117** by removing them from the tubular portions **30** of the arms **86** and **88**, and then sliding the arms **86** and **88** outwardly from the tubular portions **30** of the beams **26** and **28**, respectively. The pins **112** are also removed from the tubular portions **30** wherein the extended arms **86** and **88** are free to rotate about pivot pins **108**. The arms **86** and **88** are then pivoted upwardly and the pins **112** inserted through the openings **114** of tubular portions **30** and openings **115** of the arms **86** and **88** to secure the coupler support **20** in the elevated position (FIGS. **9** and **17**).

Next, the pivot lock defined by pin **135** is released from opening **136***a* of the arms **86** and **88**, and the coupler support **20** rotated downwardly relative to the adjustable neck **22** such that the platform is substantially parallel with the platform of the main deck **12**. The pin **135** is then reinserted into the support blocks **120** and openings **136***b* of the arms **86** and **88** to prevent further rotation of the coupler support **20** about pivot pin **130**. The clamps **142** are also secured to prevent further sliding movement of the arms **86** and **88** relative to the main deck **12**. More particularly, the hooks **146** of the first clamps **142** are coupled to the latches **150***b*. Gussets **152** may be fixed in place with screws **154** to further secure the position of the arms **86** and **88** relative to the adjustable neck **22**.

The fifth wheel hitch adapter **74** is then secured to the coupler support **20** and includes king pin **156** configured to couple with fifth wheel hitch **80** of the towing vehicle **82**. More particularly, a plurality of bolts **174** and nuts **176** secure the lower mounting plate **166** to the connector plate **172** through the cross plate **178**. As further detailed herein, the cross plate **178** is secured to forwardly extending frame members **179**, and is sandwiched between the lower mounting plate **166** and the connector plate **172**.

In a further illustrative embodiment, mounting assembly **200** may be coupled to the coupler support **20** for supporting fifth wheel hitch adapter **74'** including adjustment mechanism **186** operably coupled to the king pin **156**. More particularly, upper mounting plate **202** is secured to a lower mounting plate **204** around the front end **58** of the coupler support **20** through a plurality of fasteners, illustratively bolts **206** and cooperating nuts **208**. The vertical position of the king pin **156** may be moved by operation of the adjustment mechanism **186**.

While this invention has been described as having an exemplary design, the present invention may be further modified within the spirit and scope of this disclosure. This application is therefore intended to cover any variations, uses, or adaptations of the invention using its general principles. Further, this application is intended to cover such departures from the present disclosure as come within known or customary practice in the art to which this invention pertains.

What is claimed is:

1. A trailer comprising:

a main deck having a front end and a rear end;

a plurality of movable ground engaging members supporting the main deck;

a coupler support operably coupled to the main deck;

an adjustable neck including an arm having a first end operably coupled to the front end of the main deck and a second end operably coupled to the coupler support;

wherein the adjustable neck is configured to support the coupler support substantially level with the main deck in a pintle configuration and to support the coupler support above the main deck in a fifth wheel configuration;

a first coupling including a first pivot pin connecting the first end of the arm of the adjustable neck with the main deck;

a second coupling including a second pivot pin connecting the second end of the arm of the adjustable neck with the coupler support;

a pintle hitch adapter coupled to the coupler support in the pintle configuration, the pintle hitch adapter including a receiver configured to couple with a pintle of a towing vehicle; and

a fifth wheel hitch adapter coupled to the coupler support in the fifth wheel configuration, the fifth wheel hitch adapter including a king pin configured to couple with a fifth wheel hitch of a towing vehicle;

wherein the first coupling further comprises a linear slide operably coupled to the main deck and supporting the first end of the arm of the adjustable neck for sliding movement relative to the main deck; and

further comprising a slide lock for securing the first end of the arm from sliding movement relative to the main deck.

2. The trailer of claim **1**, further comprising a first pivot lock configured to rotatably secure the arm of the adjustable neck in position relative to the main deck, and a second pivot lock configured to rotatably secure the arm of the adjustable neck in position relative to the coupler support.

3. The trailer of claim **1**, wherein the second coupling further comprises a linear slide operably coupled to the coupler support and supporting the second end of the arm of the adjustable neck for sliding movement relative to the coupler support.

4. The trailer of claim **1**, wherein the fifth wheel hitch adapter includes an adjustment mechanism operably coupled to the king pin, the adjustment mechanism permitting vertical movement of the king pin relative to the coupler support.

5. The trailer of claim **1**, wherein the fifth wheel hitch adapter further includes one of a ball and a ball receiver supported by the king pin.

6. The trailer of claim **1**, wherein the pintle hitch adapter includes a loop configured to receive a pintle.

7. The trailer of claim **1**, wherein the main deck includes a rear platform and the coupler support includes a front platform, the rear and front platforms being vertically aligned to define a substantially continuous platform surface in the pintle mode of operation.

8. The trailer of claim **1**, further comprising a plurality of upwardly extending panels removably coupled to the main deck.

9. The trailer of claim **8**, wherein each of the upwardly extending panels includes a pin and the main deck includes a plurality of receivers, each of the receivers configured to slidably receive one of the pins for coupling the panels to the main deck.

10. A trailer comprising:

a main deck having a front end and a rear end;

a plurality of movable ground engaging members supporting the main deck;

a coupler support operably coupled to the main deck;

an adjustable neck including an arm having a first end operably coupled to the front end of the main deck and a second end operably coupled to the coupler support;

wherein the adjustable neck is configured to support the coupler support substantially level with the main deck in a pintle configuration and to support the coupler support above the main deck in a fifth wheel configuration;

a first coupling including a first pivot pin connecting the first end of the arm of the adjustable neck with the main deck;

a second coupling including a second pivot pin connecting the second end of the arm of the adjustable neck with the coupler support;

a pintle hitch adapter coupled to the coupler support in the pintle configuration, the pintle hitch adapter including a receiver configured to couple with a pintle of a towing vehicle; and

a fifth wheel hitch adapter coupled to the coupler support in the fifth wheel configuration, the fifth wheel hitch adapter including a king pin configured to couple with a fifth wheel hitch of a towing vehicle;

wherein the first coupling further comprises a linear slide operably coupled to the main deck and supporting the first end of the arm of the adjustable neck for sliding movement relative to the main deck;

wherein the second coupling further comprises a linear slide operably coupled to the coupler support and supporting the second end of the arm of the adjustable neck for sliding movement relative to the coupler support; and

a slide lock for securing the second end of the arm from sliding movement relative to the coupler support.

11. A trailer comprising:

a main deck having a front end and a rear end;

a plurality of movable ground engaging members supporting the main deck;

a coupler support operably coupled to the main deck;

an adjustable neck including an arm having a first end operably coupled to the front end of the main deck and a second end operably coupled to the coupler support;

wherein the adjustable neck is configured to support the coupler support substantially level with the main deck in a pintle configuration and to support the coupler support above the main deck in a fifth wheel configuration;

a first coupling including a first pivot pin connecting the first end of the arm of the adjustable neck with the main deck;

a second coupling including a second pivot pin connecting the second end of the arm of the adjustable neck with the coupler support;

a pintle hitch adapter coupled to the coupler support in the pintle configuration, the pintle hitch adapter including a receiver configured to couple with a pintle of a towing vehicle; and

a fifth wheel hitch adapter coupled to the coupler support in the fifth wheel configuration, the fifth wheel hitch adapter including a king pin configured to couple with a fifth wheel hitch of a towing vehicle;

wherein the first coupling further comprises a linear slide operably coupled to the main deck and supporting the first end of the arm of the adjustable neck for sliding movement relative to the main deck;

wherein the main deck includes a longitudinally extending member defining a channel, and a platform supported by the longitudinally extending member; and

the first end of the arm is configured to be telescopingly received within the channel of the longitudinally extending member.

12. A trailer comprising:

a main deck having a front end and a rear end;

a plurality of movable ground engaging members supporting the main deck;

a coupler support operably coupled to the main deck;

an adjustable neck including an arm having a first end operably coupled to the front end of the main deck and a second end operably coupled to the coupler support;

wherein the adjustable neck is configured to support the coupler support substantially level with the main deck in a pintle configuration and to support the coupler support above the main deck in a fifth wheel configuration;

a first coupling including a first pivot pin connecting the first end of the arm of the adjustable neck with the main deck;

a second coupling including a second pivot pin connecting the second end of the arm of the adjustable neck with the coupler support;

a pintle hitch adapter coupled to the coupler support in the pintle configuration, the pintle hitch adapter including a receiver configured to couple with a pintle of a towing vehicle;

a fifth wheel hitch adapter coupled to the coupler support in the fifth wheel configuration, the fifth wheel hitch adapter including a king pin configured to couple with a fifth wheel hitch of a towing vehicle; and

a gusset extending between the arm of the adjustable neck and the coupler support when the adjustable neck is in the fifth wheel configuration, the gusset strengthening the connection between the coupler support and the adjustable neck.

13. A trailer comprising:

a main deck having a front end and a rear end;

a plurality of movable ground engaging members supporting the main deck;

a coupler support operably coupled to the main deck;

an adjustable neck including an arm having a first end operably coupled to the front end of the main deck and a second end operably coupled to the coupler support;

wherein the adjustable neck is configured to support the coupler support substantially level with the main deck in a pintle configuration and to support the coupler support above the main deck in a fifth wheel configuration;

a first coupling including a first pivot pin connecting the first end of the arm of the adjustable neck with the main deck;

a second coupling including a second pivot pin connecting the second end of the arm of the adjustable neck with the coupler support;

a pintle hitch adapter coupled to the coupler support in the pintle configuration, the pintle hitch adapter including a receiver configured to couple with a pintle of a towing vehicle; and

a fifth wheel hitch adapter coupled to the coupler support in the fifth wheel configuration, the fifth wheel hitch adapter including a king pin configured to couple with a fifth wheel hitch of a towing vehicle;

wherein the adjustable neck includes laterally spaced apart first and second arms, and a strut extending between the first and second arms.

14. A trailer comprising:

a first deck including a support platform;

a second deck including a support platform and configured to be adjusted from between a raised position and a lowered position, wherein in the raised position the support platform of the second deck is positioned above the support platform of the first deck, and in the lowered position the support platform of the second deck is positioned substantially planar with the support platform of the first deck;

an adjustable neck including an arm having a first end operably coupled to the main deck and a second end operably coupled to the second deck;

a first coupling including a first pivot pin connecting the first end of the arm of the adjustable neck with the first deck, and a first pivot lock to rotatably secure the arm of the adjustable neck in position relative to the first deck;

the first coupling further comprising a first linear slide supporting the first end of the arm of the adjustable neck for sliding movement relative to the first deck;

a second coupling including a second pivot pin connecting the second end of the arm of the adjustable neck with the second deck, and a second pivot lock to rotatably secure the arm of the adjustable neck in position relative to the second deck; and

a slide lock for securing the first end of the arm of the adjustable neck from sliding movement relative to the first deck;

wherein the second coupling further comprises a second linear slide supporting the second end of the arm of the adjustable neck for sliding movement relative to the second deck.

15. The trailer of claim **14**, wherein the support platform of the first deck and the support platform of the second deck define a substantially continuous planar support surface when the second deck is in the lowered position.

16. The trailer of claim **14**, further comprising a pintle hitch adapter configured to be removably coupled to the second deck, the pintle hitch adapter including a receiver configured to receive a pintle of a towing vehicle when the second deck is in the lowered position.

17. The trailer of claim **16**, further comprising a fifth wheel hitch adapter configured to be removably coupled to the second deck, the fifth wheel hitch adapter including a king pin configured to be received within a fifth wheel hitch of a towing vehicle when the second deck is in the raised position.

18. The trailer of claim **17**, wherein the fifth wheel hitch adapter includes an adjustment mechanism operably coupled to the king pin, the adjustment mechanism permitting vertical movement of the king pin relative to the second deck.

19. The trailer of claim **17**, wherein the fifth wheel hitch adapter includes one of a ball and a ball receiver supported by the king pin.

20. The trailer of claim **17**, wherein the pintle hitch adapter includes a loop configured to receive a pintle.

21. The trailer of claim **14**, wherein the slide lock comprises a locking pin offset from the pivot pin and configured to couple the arm of the adjustable neck to the first deck.

22. The trailer of claim **14**, wherein:

the first deck includes a longitudinally extending member defining a channel supporting the support and a platform; and

the first end of the arm of the adjustable neck is configured to be telescopingly received within the channel of the longitudinally extending member.

23. The trailer of claim **14**, further comprising a gusset extending between the arm of the adjustable neck and the second deck when the adjustable neck is in the raised position, the gusset securing the position of the second deck relative to the adjustable neck.

24. The trailer of claim **14**, wherein the adjustable neck includes laterally spaced first and second arms, and a strut extending between the first and second arms.

25. A trailer comprising:

a first deck including a support platform;

a second deck including a support platform and configured to be adjusted from between a raised position and a lowered position, wherein in the raised position the support platform of the second deck is positioned above the support platform of the first deck, and in the lowered position the support platform of the second deck is positioned substantially planar with the support platform of the first deck;

an adjustable neck including an arm having a first end operably coupled to the main deck and a second end operably coupled to the second deck;

a first coupling including a first pivot pin connecting the first end of the arm of the adjustable neck with the first deck, and a first pivot lock to rotatably secure the arm of the adjustable neck in position relative to the first deck;

the first coupling further comprising a first linear slide supporting the first end of the arm of the adjustable neck for sliding movement relative to the first deck;

a second coupling including a second pivot pin connecting the second end of the arm of the adjustable neck with the second deck, and a second pivot lock to rotatably secure the arm of the adjustable neck in position relative to the second deck;

the second coupling further comprising a second linear slide supporting the second end of the arm of the adjustable neck for sliding movement relative to the second deck; and

a slide lock for securing the second end of the arm of the adjustable neck from sliding movement relative to the second deck.

26. The trailer of claim **25**, wherein the slide lock comprises a first clamp including a hook, a pivotable handle operably coupled to the hook, and a latch secured to the second deck and configured to releasably couple with the hook.

27. The trailer of claim **26**, wherein the slide lock further comprises a second clamp positioned on an opposite side of the pivot pin from the first clamp, the second clamp including a hook, a pivotable handle operably coupled to the hook, and a latch configured to releasably couple with the hook.

28. The trailer of claim **27**, wherein the first clamp is secured to the first latch and the second clamp is released from the first latch when the second deck is in the raised position, and the first clamp is secured to the first latch and the second clamp is secured to the second latch when the second deck is in the lowered position.

29. A trailer comprising:

a first deck having a support platform, a front end and a rear end;

a plurality of movable ground engaging members supporting the first deck;

a second deck having a support platform and operably coupled to the first deck;

an adjustable neck including an arm having a first end operably coupled to the front end of the first deck and a second end operably coupled to the second deck, wherein the adjustable neck is configured to support the second deck substantially level with the first deck in a pintle configuration and to support the second deck above the first deck in a fifth wheel configuration;

a first coupling including a pivot pin connecting the first end of the arm of the adjustable neck with the first deck, and a pivot lock to rotatably secure the arm of the adjustable neck in position relative to the first deck;

the first coupling further comprising a linear slide supporting the first end of the arm of the adjustable neck for sliding movement relative to the first deck;

a first slide lock for securing the first end of the arm of the adjustable neck from sliding movement relative to the first deck;

a second coupling including a pivot pin connecting the second end of the arm of the adjustable neck with the second deck, and a pivot lock to rotatably secure the arm of the adjustable neck in position relative to the second deck;

the second coupling further comprising a linear slide supporting the second end of the arm of the adjustable neck for sliding movement relative to the second deck;

a second slide lock for securing the second end of the arm of the adjustable neck from sliding movement relative to the second deck;

a pintle hitch adapter configured to be removably coupled to the second deck in the pintle configuration, the pintle hitch adapter including a receiver configured to couple with a pintle of a towing vehicle; and

a fifth wheel hitch adapter configured to be removably coupled to the second deck in the fifth wheel configuration, the fifth wheel hitch adapter including a king pin configured to couple with a fifth wheel hitch of a towing vehicle.

30. The trailer of claim **29**, wherein the support platform of the first deck and the support platform of the second deck define a substantially continuous support surface when the second deck is in the lowered position.

31. The trailer of claim **29**, wherein the first slide lock comprises a locking pin offset from the pivot pin and configured to couple the arm to the first deck.

32. The trailer of claim **31**, wherein the second slide lock comprises a first clamp including a hook, a pivotable handle operably coupled to the hook, and a latch configured to releasably couple with the hook.

33. The trailer of claim **32**, wherein the second slide lock further comprises a second clamp positioned on an opposite side of the pivot pin from the first clamp, the second clamp including a hook, a pivotable handle operably coupled to the hook, and a latch configured to releasably couple with the hook.

34. The trailer of claim **29**, wherein:

the first deck includes a longitudinally extending member defining a channel, and a platform supported by the longitudinally extending member; and

the first end of the arm of the adjustable neck is configured to be telescopingly received within the channel of the longitudinally extending member.

* * * * *