US008669504B2

(12) **United States Patent**
Miller et al.

(10) **Patent No.: US 8,669,504 B2**
(45) **Date of Patent: Mar. 11, 2014**

(54) **HAND LAUNCHABLE UNMANNED AERIAL VEHICLE**

(71) Applicants: **Gerald Miller**, Bedford, IN (US); **James Stewart**, Bloomington, IN (US)

(72) Inventors: **Gerald Miller**, Bedford, IN (US); **James Stewart**, Bloomington, IN (US)

(73) Assignee: **The United States of America as represented by the Secretary of the Navy**, Washington, DC (US)

(*) Notice: Subject to any disclaimer, the term of this patent is extended or adjusted under 35 U.S.C. 154(b) by 0 days.

(21) Appl. No.: **13/790,655**

(22) Filed: **Mar. 8, 2013**

(65) **Prior Publication Data**

US 2014/0027579 A1 Jan. 30, 2014

Related U.S. Application Data

(62) Division of application No. 13/623,551, filed on Sep. 20, 2012, which is a division of application No. 12/640,585, filed on Dec. 17, 2009, now Pat. No. 8,366,054.

(51) **Int. Cl.**
F41F 7/00 (2006.01)

(52) **U.S. Cl.**
USPC **244/3.1**; 244/3.15; 244/63

(58) **Field of Classification Search**
USPC 244/3.1, 3.15–3.18, 3.21, 63
See application file for complete search history.

(56) **References Cited**

U.S. PATENT DOCUMENTS

3,945,588	A	3/1976	Maglio, Jr.	
4,553,718	A *	11/1985	Pinson	244/3.15
4,733,609	A *	3/1988	Goodwin et al.	102/213
4,859,054	A	8/1989	Harrison	
5,049,740	A	9/1991	Pines et al.	
5,211,356	A	5/1993	McWilliams et al.	
6,157,875	A	12/2000	Hedman et al.	
6,244,535	B1 *	6/2001	Felix	244/3.16
6,761,117	B1	7/2004	Benz	
7,481,145	B1	1/2009	Turner, Jr.	
2003/0116677	A1 *	6/2003	Young et al.	244/63
2004/0015273	A1	1/2004	Leonard et al.	
2004/0237825	A1	12/2004	Ronn et al.	
2006/0196383	A1	9/2006	Parker et al.	
2006/0278757	A1	12/2006	Kelleher	
2009/0039197	A1	2/2009	Maynard et al.	
2012/0037749	A1 *	2/2012	Lance et al.	244/3.12

* cited by examiner

Primary Examiner — Tien Dinh
Assistant Examiner — Nicholas McFall
(74) *Attorney, Agent, or Firm* — Christopher A. Monsey

(57) **ABSTRACT**

An unmanned aerial vehicle including a controller operating in a search mode of operation where a receiver of an acquisition sensor searches for a target and causes flight control surfaces to guide the vehicle in a downward spiral path, a terminal mode of operation where the acquisition sensor detects a target and causes flight control surfaces to direct the vehicle toward the target, and an activation mode of operation where a trigger sensor detects a target within a predetermined distance to the vehicle and the controller activates a responder.

11 Claims, 10 Drawing Sheets

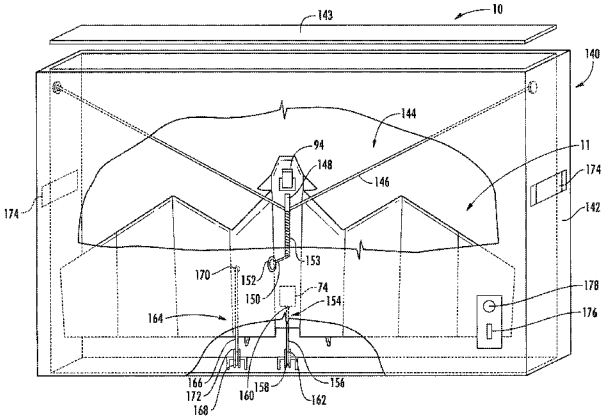

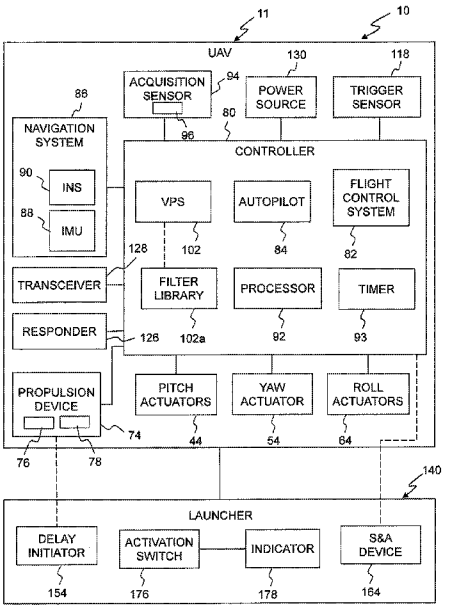

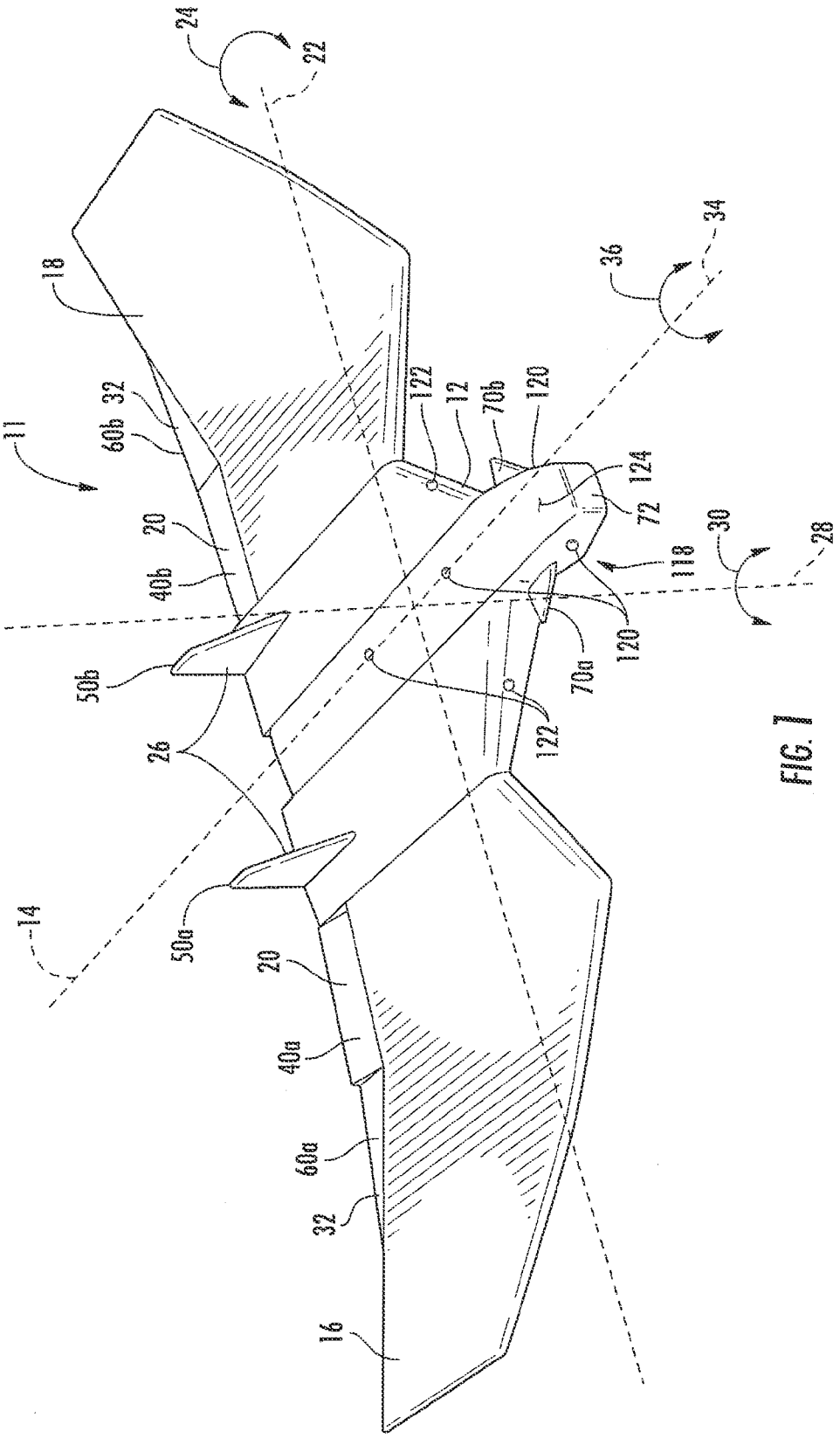
24
22
18
11
32
60b
20
40b
50b
26
14
50a
20
40a
60a
32
16
122
12
70b
120
124
72
118
120
70a
122
36
34
30
28

FIG. 1

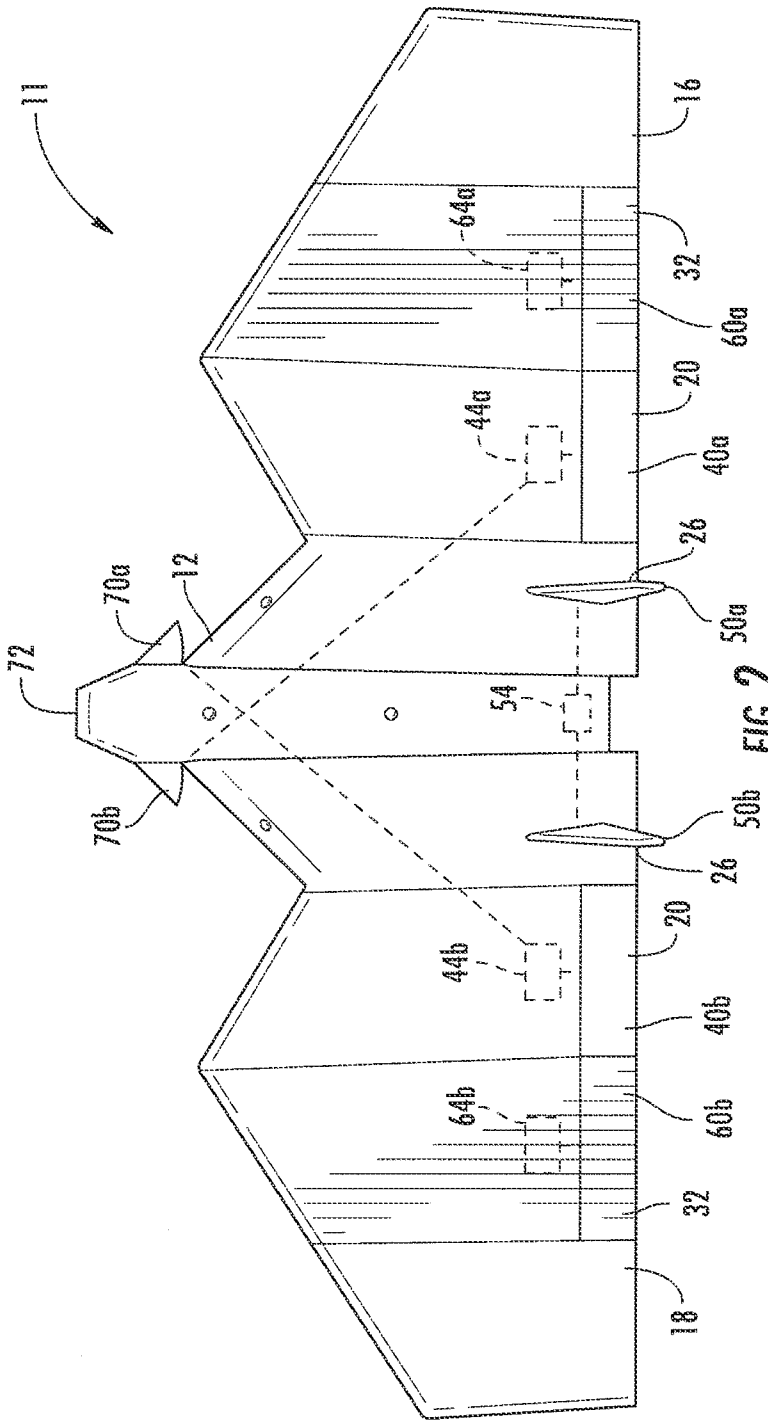
11
16
64a
32
60a
20
44a
40a
26
50a
70a
12
72
54
70b
50b
26
20
44b
40b
64b
60b
32
18

FIG. 2

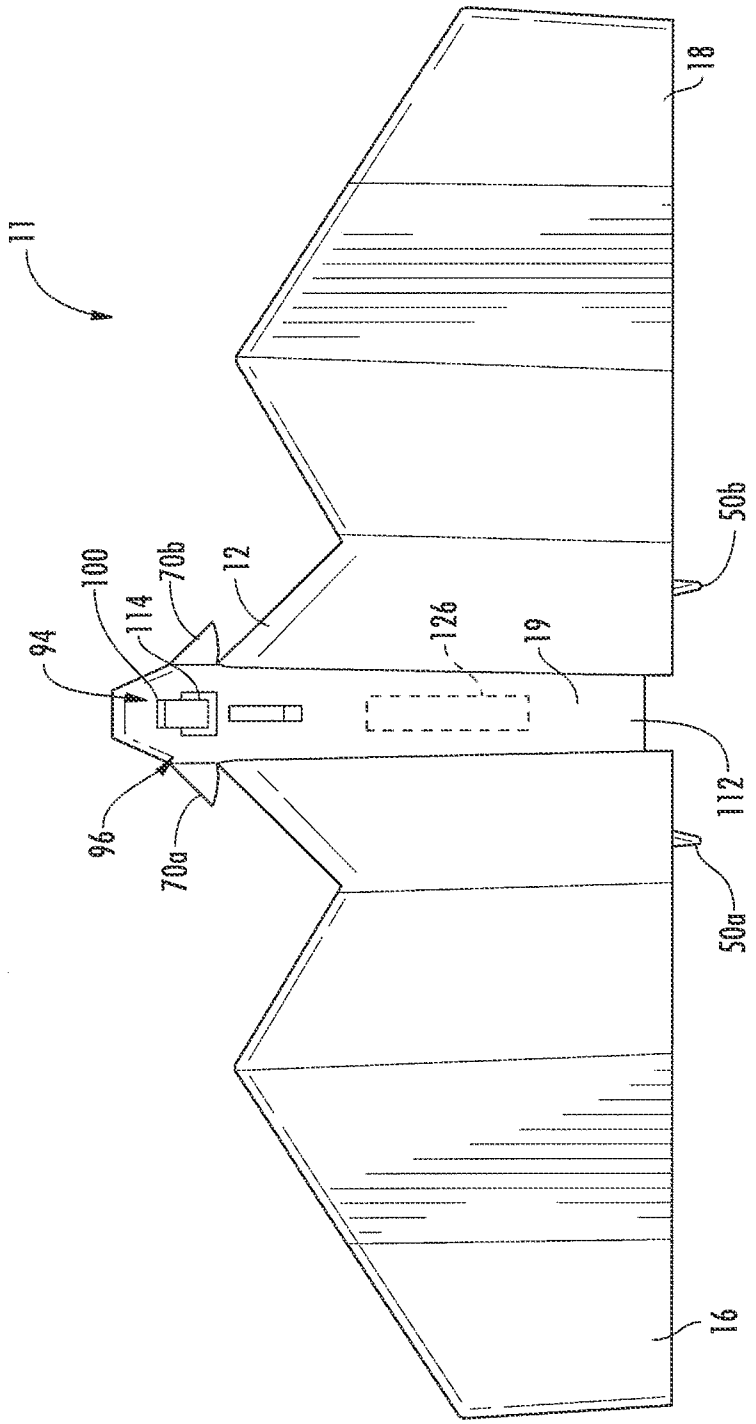

FIG. 3

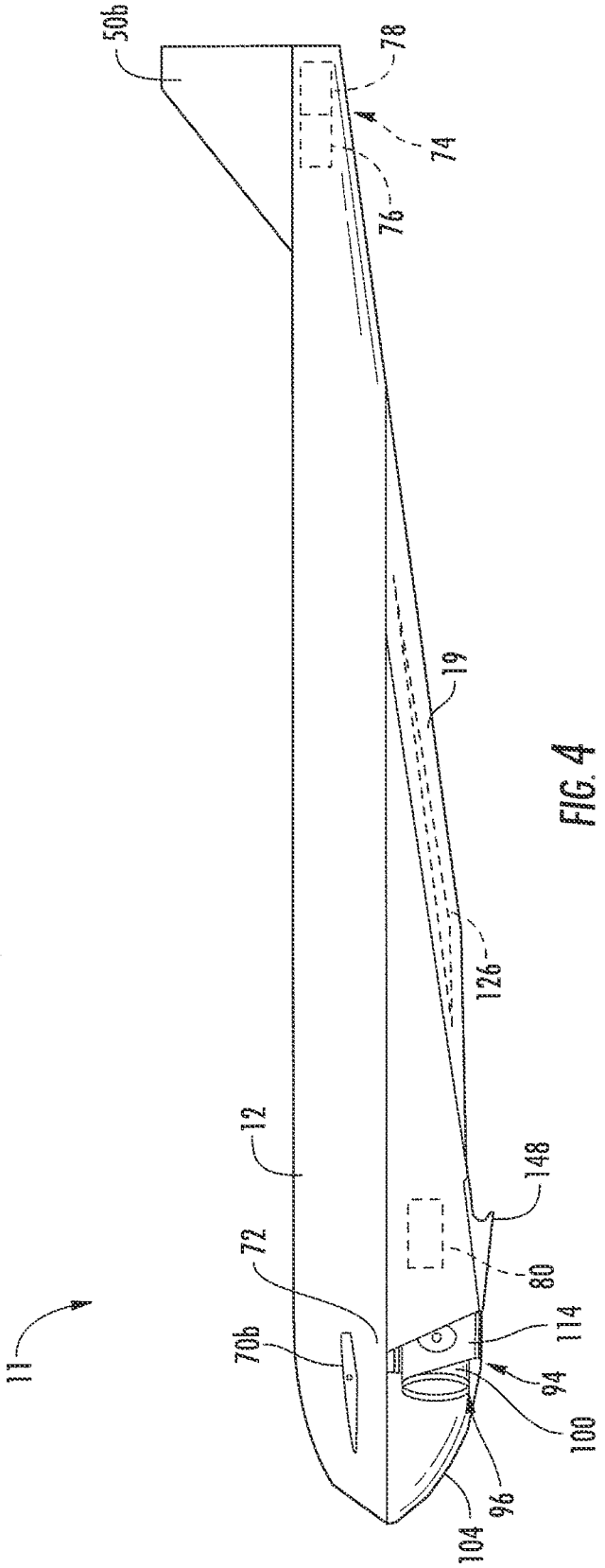

FIG. 4

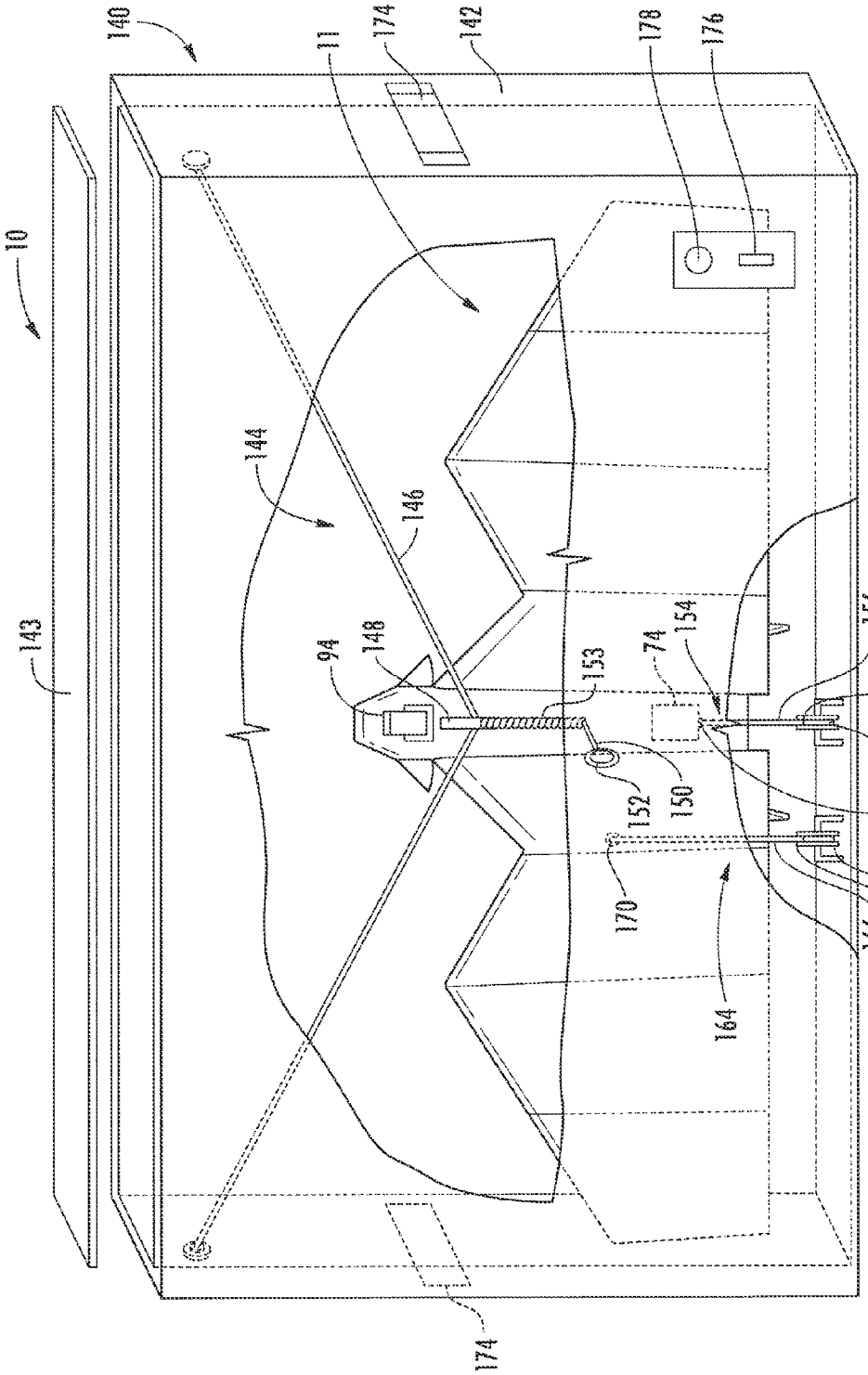
10
140
11
174
142
178
176
143
144
146
94
148
153
74
154
156
162
152
150
158
160
170
166
172
168
164
174

FIG. 5

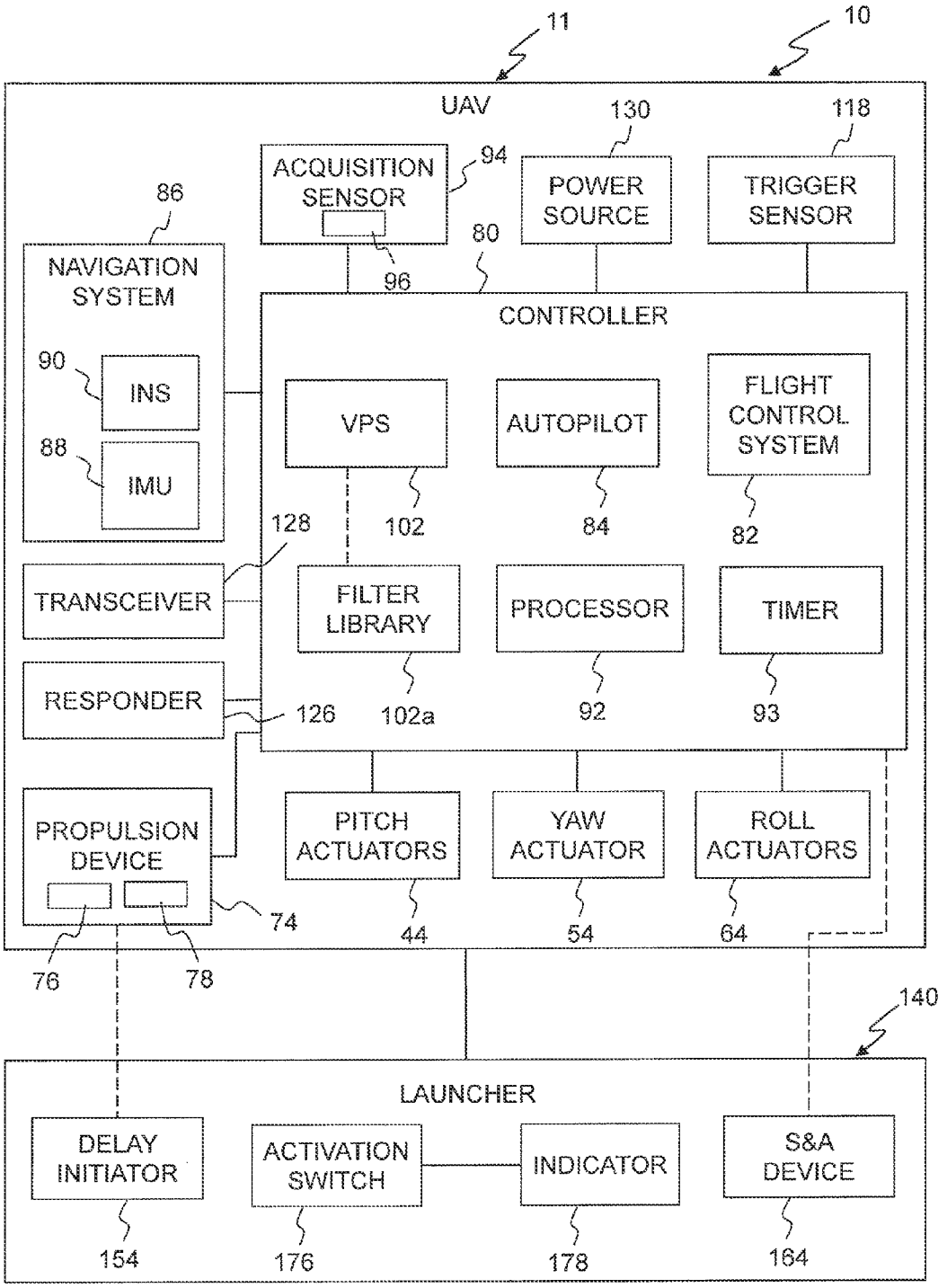
11
10
UAV
130
118
ACQUISITION SENSOR
94
POWER SOURCE
TRIGGER SENSOR
86
80
NAVIGATION SYSTEM
96
CONTROLLER
90
INS
VPS
AUTOPILOT
FLIGHT CONTROL SYSTEM
88
IMU
128
102
84
82
TRANSCEIVER
FILTER LIBRARY
PROCESSOR
TIMER
RESPONDER
126
102a
92
93
PROPULSION DEVICE
PITCH ACTUATORS
YAW ACTUATOR
ROLL ACTUATORS
74
44
54
64
76
78
140
LAUNCHER
DELAY INITIATOR
ACTIVATION SWITCH
INDICATOR
S&A DEVICE
154
176
178
164

FIG. 6

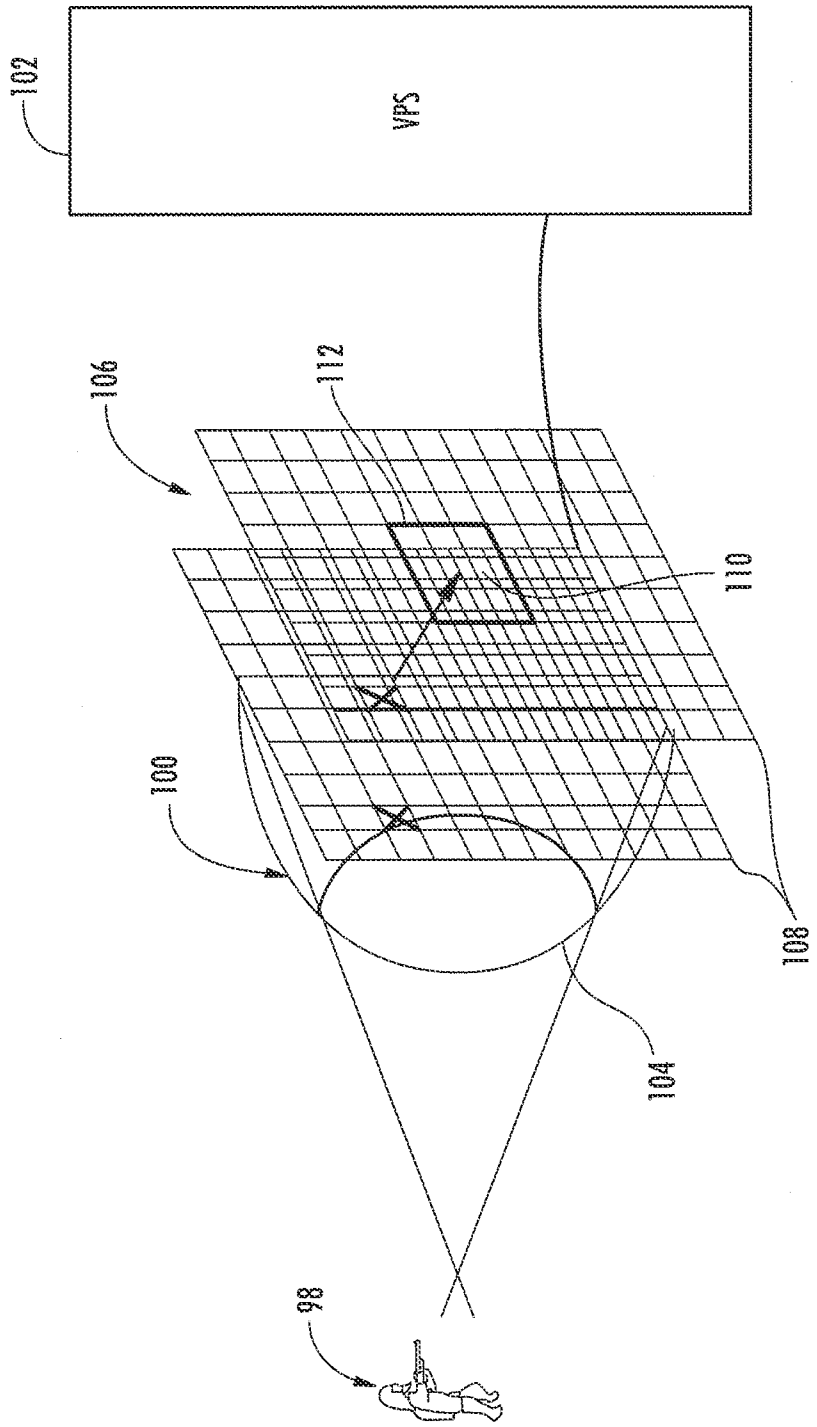

FIG. 7

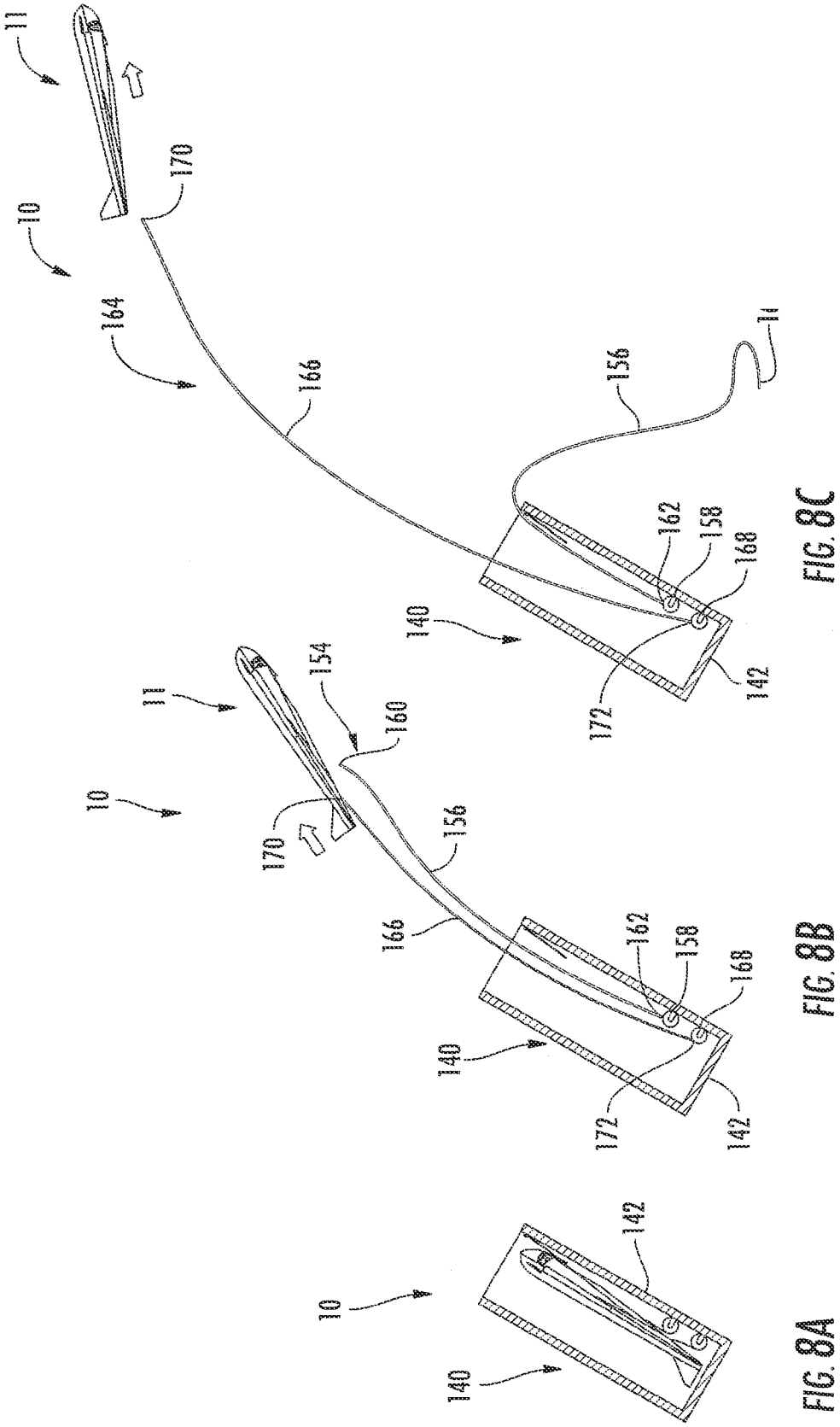
11
10
170
164
166
156
14
162
158
168
140
142
172
154
160
FIG. 8C
FIG. 8B
FIG. 8A

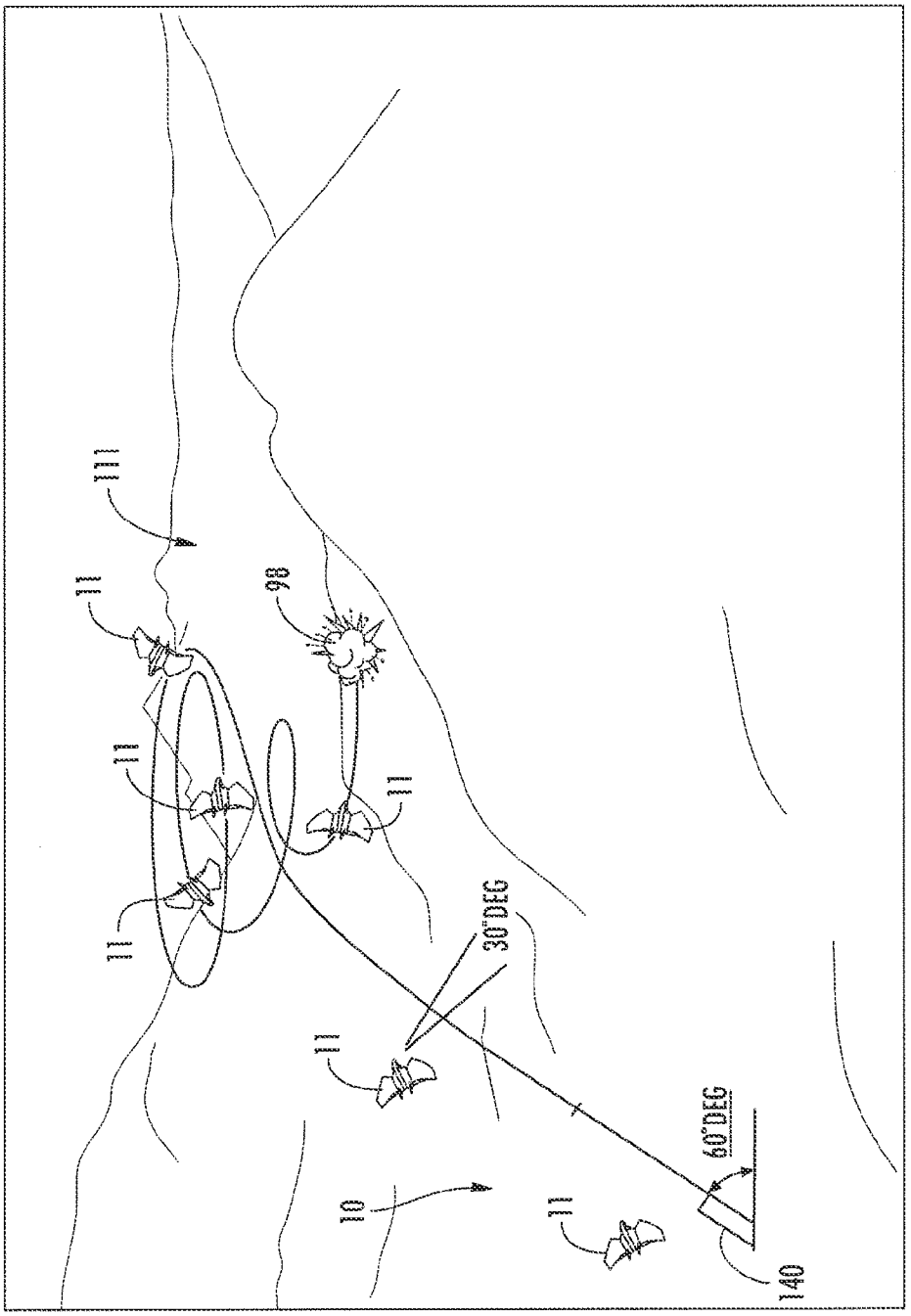

FIG. 9

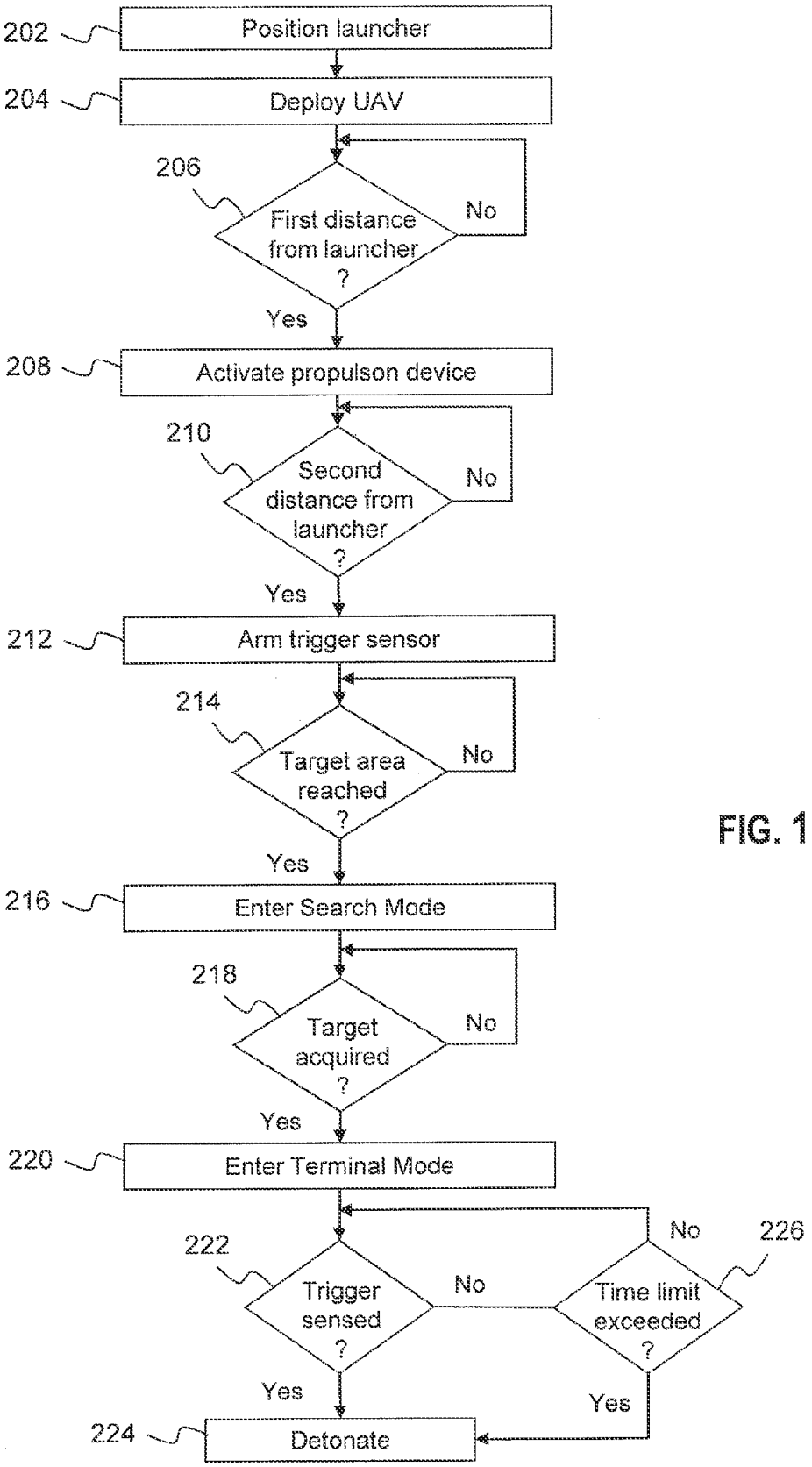
202
Position launcher
204
Deploy UAV
206
First distance from launcher ?
No
Yes
208
Activate propulson device
210
Second distance from launcher ?
No
Yes
212
Arm trigger sensor
214
Target area reached ?
No
Yes
216
Enter Search Mode
218
Target acquired ?
No
Yes
220
Enter Terminal Mode
222
Trigger sensed ?
No
Yes
226
Time limit exceeded ?
No
Yes
224
Detonate

FIG. 10

HAND LAUNCHABLE UNMANNED AERIAL VEHICLE

CROSS-REFERENCE TO RELATED APPLICATION

This application is a divisional of U.S. patent application Ser. No. 13/623,551, filed Sep. 20, 2012, titled "HAND LAUNCHABLE UNMANNED AERIAL VEHICLE", which is a divisional of U.S. Pat. No. 8,366,054, issued Feb. 5, 2013, titled "HAND LAUNCHABLE UNMANNED AERIAL VEHICLE", the disclosures of which are expressly incorporated by reference herein.

STATEMENT REGARDING FEDERALLY SPONSORED RESEARCH OR DEVELOPMENT

The invention described herein was made in the performance of official duties by employees of the Department of the Navy and may be manufactured, used and licensed by or for the United States Government for any governmental purpose without payment of any royalties thereon.

BACKGROUND AND SUMMARY OF THE DISCLOSURE

The present invention relates generally to aerial vehicles and, more particularly to unmanned aerial vehicles configured to be guided to a target.

It is known to utilize unmanned aerial vehicles (UAV) for reconnaissance and for directing to a desired target, illustratively through a remote user interface.

According to an illustrative embodiment of the present disclosure, an unmanned vehicle includes a body defining a longitudinal axis, a first wing extending laterally in a first direction from the body, and a second wing extending laterally in a second direction from the body, the second direction being opposite the first direction. A first flight control surface is supported by the body and is configured to control pitch of the vehicle. A first actuator is operably coupled to and configured to pivot the first flight control surface. A second flight control surface is supported by the body and is configured to control yaw of the vehicle. A second actuator is operably coupled to and configured to pivot the second flight control surface. A controller includes a flight control system in electrical communication with the first actuator and the second actuator. A propulsion device is operably coupled to the body. An acquisition sensor is operably coupled to the body and is in electrical communication with the controller. The acquisition sensor includes a receiver directed downwardly from the body and is configured to identify a target. A trigger sensor is operably coupled to the body and is in electrical communication with the controller. The trigger sensor includes a receiver configured to detect proximity to a target. A responder is operably coupled to the body and is in electrical communication with the controller. The controller operates in a search mode of operation where the receiver of the acquisition sensor searches for a target and causes the first actuator and the second actuator to direct the vehicle in a downward spiral path, a terminal mode of operation where the acquisition sensor detects the target and causes the first actuator and the second actuator to direct the vehicle toward the target, and an activation mode of operation where the trigger sensor detects the target within a predetermined distance to the vehicle and activates the responder.

According to a further illustrative embodiment of the present disclosure, a method of operating an unmanned aerial vehicle includes the steps of storing an aerial vehicle within a holder of a portable launcher, releasing a deployment mechanism to propel the aerial vehicle upwardly into the air, and activating a propulsion device at a first distance from the launcher. The method further illustratively includes the steps of arming a trigger sensor at a second distance from the launcher, modifying flight control surfaces to guide the aerial vehicle in a downward spiral path in a search mode of operation, and searching for a target in the search mode of operation. The method also illustratively includes the steps of acquiring the target, and modifying the flight control surfaces to guide the vehicle toward the target in a terminal mode of operation. Further illustratively, the method includes the steps of detecting a stimulus at the trigger sensor, and activating a responder in response to the detected stimulus in an activation mode of operation.

Additional features and advantages of the present invention will become apparent to those skilled in the art upon consideration of the following detailed description of the illustrative embodiment exemplifying the best mode of carrying out the invention as presently perceived.

BRIEF DESCRIPTION OF THE DRAWINGS

The foregoing aspects and many of the attendant advantages of this invention will become more readily appreciated as the same become better understood by reference to the following detailed description when taken in conjunction with the accompanying drawings.

FIG. **1** is a perspective view of an illustrative unmanned aerial vehicle (UAV) of the present disclosure;

FIG. **2** is a top plan view of the UAV of FIG. **1**;

FIG. **3** is a bottom plan view of the UAV of FIG. **1**;

FIG. **4** is a side elevational view of the UAV of FIG. **1**, with the wings removed for clarity;

FIG. **5** is a perspective view of an aerial vehicle system, showing the UAV of FIG. **1** in a stored position within a portable launcher of the present disclosure, with a partial cutaway of the launcher;

FIG. **6** is a block diagram illustrating interconnection between various components of the system of FIG. **1**;

FIG. **7** is a diagrammatic representation of a focal plane array of the optical sensor of the present disclosure;

FIGS. **8**A-**8**C illustrate the system of FIG. **1** in stored and launched modes of operation;

FIG. **9** is a diagrammatic view demonstrative an illustrative operation of the UAV of FIG. **1**; and

FIG. **10** is a flow chart of an illustrative method of operation of the UAV of FIG. **1**.

Corresponding reference characters indicate corresponding parts throughout the several views. Although the drawings represent embodiments of various features and components according to the present disclosure, the drawings are not necessarily to scale and certain features may be exaggerated in order to better illustrate and explain the present disclosure. The exemplification set out herein illustrates embodiments of the invention, and such exemplifications are not to be construed as limiting the scope of the invention in any manner.

DETAILED DESCRIPTION OF THE DRAWINGS

For the purposes of promoting an understanding of the principles of the invention, reference will now be made to the embodiments illustrated in the drawings, which are described below. The embodiments disclosed below are not intended to be exhaustive or limit the invention to the precise form disclosed in the following detailed description. Rather, the

embodiments are chosen and described so that others skilled in the art may utilize their teachings. It will be understood that no limitation of the scope of the invention is thereby intended. The invention includes any alterations and further modifications in the illustrated devices and described methods and further applications of the principles of the invention which would normally occur to one skilled in the art to which the invention relates.

Referring initially to FIGS. **1-4**, an aerial vehicle system **10** according to an illustrative embodiment of the present disclosure includes an unmanned aerial vehicle **11** having a body **12** defining a longitudinal axis **14**. A first wing **16** extends laterally outwardly from the body **12** in a first direction, while a second wing **18** extends laterally outwardly from the body **12** in a second direction opposite from the first direction. Illustratively, the body **12** and wings **16** and **18** are formed of a durable, light weight material such as a carbon fiber composite. A payload compartment **19** may be removably coupled to the body **12** (FIG. **4**).

With further reference to FIGS. **1** and **2**, a first flight control surface **20** is supported by the body **12** and is configured to control pitch of the vehicle **11**. Rotation of the vehicle **11** about a lateral axis **22** (shown by arrow **24** in FIG. **1**) is typically called pitch. Similarly, a second flight control surface **26** is supported by the body **12** and is configured to control yaw of the vehicle **11**. Rotation of the vehicle **11** about a vertical axis **28** (shown by arrow **30** in FIG. **1**) is typically called yaw. Finally, a third flight control surface **32** is illustratively supported by the body **12** and is configured to control roll of the vehicle **11**. Rotation of the vehicle **11** about a longitudinal axis **34** (shown by arrow **36** in FIG. **1**) is typically called bank or roll.

In the illustrative embodiment, the first flight control surface **20** is defined by first and second elevators or horizontal stabilizers **40***a* and **40***b* supported by the first and second wings **16** and **18**, respectively. The elevators **40***a* and **40***b* are operably coupled to first or pitch actuators **44***a* and **44***b*, such as servo motors or hydraulic cylinders, to pivot the elevators **40***a* and **40***b* relative to the wings **16** and **18**, respectively. In the illustrative embodiment, the second flight control surface **26** is defined by first and second rudders or vertical stabilizers **50***a* and **50***b* supported by the first and second wings **16** and **18**, respectively. A second or yaw actuator **54** is illustratively operably coupled to the rudders **50***a* and **50***b* and is configured to pivot the rudders **50***a* and **50***b* relative to the wings **16** and **18**, respectively. The third flight control surface **32** is illustratively defined by ailerons **60***a* and **60***b* supported by the wings **16** and **18** and disposed laterally outwardly from the elevators **40***a* and **40***b*. Third or roll actuators **64***a* and **64***b* are illustratively operably coupled to and configured to pivot the ailerons **60***a* and **60***b* relative to the wings **16** and **18**, respectively. The ailerons **60***a* and **60***b* are optional, in that the elevators **40***a* and **40***b* may perform the function of the ailerons **60***a* and **60***b*. Moreover, the elevators **40***a* and **40***b* may control both pitch and roll of the vehicle **11**.

Optional canards **70***a* and **70***b* illustratively supported near a nose portion **72** of the body **12**. The canards **70***a* and **70***b* may be pivotally moved by the actuators **44***a* and **44***b* and may be used to increase responsiveness of the vehicle **11**. For example, when coupled to movement of the elevators **40***a* and **40***b*, the canards **70***a* and **70***b* improve flight performance of the vehicle **11**. The actuators **44**, **54**, and **64** may comprise directional servo motors or hydraulic actuators coupled to the respective flight control surfaces **20**, **26**, and **32** by appropriate couplers, such as conventional mechanical linkages.

With reference to FIGS. **4** and **6**, a propulsion device **74** is operably coupled to the body **12** and is configured to propel the vehicle **11** in the air. The propulsion device **74** may comprise a conventional solid rocket motor **76** including an igniter or trigger **78**. The igniter **78** may be a conventional charge that ignites or actuates the rocket motor **76**.

As shown in FIG. **6**, a controller **80** includes a flight control system **82** in electrical communication with the actuators **44**, **54**, and **64**. An autopilot **84** may be provided in communication with the flight control system **82**. The autopilot **84** coordinates with the flight control system **82** to coordinate flight of the vehicle **11**. As further detailed herein, a flight path for the vehicle **11** may be preset and stored within the autopilot **84**. The autopilot **84** may comprise one of the Piccolo systems available from Cloud Cap Technology of Hood River, Oreg.

The vehicle **11** illustratively further includes a navigation system **86** in electrical communication with the controller **80**. The navigation system **86** illustratively includes an inertial measurement unit (IMU) **88** to detect changes in pitch, roll, and yaw of the vehicle **11**. More particularly, the IMU **88** is illustratively a 3-axis device providing calibrated rate and acceleration data to the controller **80**. Navigation system **86** further illustratively includes an inertial navigational system (INS) **90** to determine position, orientation, and velocity of the vehicle **11**. The INS **90** may include a global positioning system (GPS) to provide vector flight guidance to the flight control system **82**. The navigation system **86** illustratively provides information from the IMU **88** and the INS **90** to a processor **92** of the controller **80**. The processor **92** illustratively includes memory for storing operation software. A clock or timer **93** is illustratively in communication with the processor **92**. In one illustrative embodiment, the IMU **88** and the INS **90** be of the types available from Cloud Cap Technology.

With reference to FIGS. **4** and **6**, an acquisition sensor **94** is operably coupled to the body **12** and is in electrical communication with the controller **80**. The acquisition sensor **94** illustratively includes a receiver **96** directed downwardly from the body **12** and configured to collect light from a target **98**. The receiver **96** of the acquisition sensor **94** illustratively comprises an optical sensor **100** configured to receive short wave infrared (SWIR) light. The controller **80** illustratively includes a video processor or VPS **102** configured to receive input from the receiver **96**, to identify and acquire the target **98**, and to coordinate with the autopilot **84** and the flight control system **82** to provide terminal guidance to the target **98**.

A lens **104** is configured to protect and direct infrared light to the optical sensor **100** for processing by the VPS **102**. The lens **104** is illustratively formed of a non-SWIR interfering polyethylene. As shown in FIG. **7**, the VPS **102** includes a focal plane array **106** having a software generated collector grid **108** to receive infrared light collected from the lens **104** as a collected image **110** of the target **98**, wherein the VPS **102** compares the collected image **110** to a stored image of the desired target **98**. More particularly, filter software with masking conditions look for a "hot spot" in a target area **111** below the vehicle **11**. For example, a filter library **102***a* may be saved within filter software stored within the VPS **102** and includes a plurality of stored images of known targets. More particularly, the filter library **102***a* may illustratively store a plurality of mask forms and pattern pixilations for known targets.

If the VPS **102** determines that the collected image **110** and a stored image within the filter library **102***a* are substantially identical, then the controller **80** acquires the target **98**. Moreover, the VPS **102** attempts to match parametric goals and target recognition by comparing temperature indications to pixels in mask. When a "hot spot" is found, then the next filter

is applied by the VPS **102** as a comparison with stored mask forms and pattern recognitions within the filter library **102***a* (e.g., enemy hot weapon, etc.). Additional library parameters may be stored within the filter library **102***a*, the VPS **102** and/or the processor **92**, such as body temperature, enemy combatant form, and other "not friend" indicators. In certain embodiments, the filter library **102***a* may also be used to filter out undesired "noise," such as chlorophyll in jungle environments.

Once acquired, the controller **80** then adjusts the actuators **44**, **54**, and **64** to alter the flight path of the vehicle **11** and reposition the collected image **110** of the target **98** within a center portion **112** of the collector grid **108**. More particularly, the processor **92** receives input from the VPS **102** and coordinates with the autopilot **84** and the flight control system **82** to activate the actuators **44**, **54**, and **64** as needed to maintain the image **110** within the center portion **112** of the collector grid **108**. In one illustrative embodiment, the optical sensor **100** comprises a SU640KTS NTSC SWIR camera available from BF Goodrich of Princeton, N.J.

With further reference to FIG. **4**, the optical sensor **100** is illustratively supported below the nose portion **72** of the body **12** by a gimbal device **114**. The gimbal device **114** is illustratively motorized to provide for pivoting movement of the optical sensor **100** about perpendicular axes. In one illustrative embodiment, the gimbal device **114** may the TASE LT gimbal available from Cloud Cap Technology.

A trigger sensor **118** is operably coupled to the body **12** and is in electrical communication with the controller **80**. Illustratively, the trigger sensor **118** includes a receiver configured to detect proximity to the target **98**. In the illustrative embodiment, the trigger sensor **118** includes a plurality of light emitting diodes (LEDs) including emitters **120** and cooperating receivers **122**. The emitters **120** and receivers **122** may be supported in various locations on an outer surface **124** of the body **12** of the vehicle **11** (FIG. **1**). The receivers **122** are configured to receive light from the emitters **120** and to transmit a signal to the controller **80** when sufficient light is detected (typically between 30 feet and 1 foot). Illustratively, the signal is transmitted when sufficient light from the respective emitter **120** is reflected off of a surface within a desired proximity thereto and received by the corresponding receiver **122**.

As shown in FIGS. **4** and **6**, a responder **126** is operably coupled to the body **12** and is in electrical communication with the controller **80**. The responder **126** is configured to be activated by the controller **80** in response to a stimulus. Illustratively, the responder **126** comprises an explosive received within the payload compartment and detonated by the controller **80** in response to a signal from the trigger sensor. In other illustrative embodiments, the responder **126** may comprise a non-lethal weapon (such as rubber projectiles or bullets), a crowd dispersal device (such as tear gas), or reconnaissance devices (such as electronic surveillance equipment).

With further reference to FIG. **6**, a transceiver **128** may be in electrical communication with the controller **80** for providing wireless communication with a remote unit, such as a base controller (not shown). A power source **130** is supported within the body **12** and is electrically coupled to the controller **80** for supplying electrical components of the vehicle **11**. Illustratively, the power source **130** includes a plurality of lithium ion batteries.

With reference to FIG. **5**, the system **10** further includes a launcher **140** including a support or case **142** to hold the vehicle **11** in a stored mode of operation. An optional cover **143** may be used to protect the vehicle **11** prior to launch. The launcher **140** further includes a deployment mechanism **144** configured to launch or propel the vehicle **11** upwardly into the air in a launch mode of operation. In the illustrative embodiment, the deployment mechanism **144** comprises a spring biased catapult or bow **146** operably coupled to the support **142**. The body **12** of the vehicle **11** includes a hook **148** configured to engage the catapult **146** in a stored mode of operation. A holder in the form of a pin **150** secures the catapult in a biased, downward position. By pulling a handle **152** coupled to the pin **150**, the catapult **146** releases the spring **153** biasing the catapult **146**, and forces the hook **148** and therefore the body **12** upwardly such that the vehicle **11** is propelled upwardly into the air away from the launcher **140**.

With reference to FIGS. **5** and **8**B, the launcher **140** includes a delay initiator **154** for activating the propulsion device **74** when the vehicle **11** has reached a first predetermined distance from the launcher **140** (illustratively 10 feet from the launcher **140**). Illustratively, the delayed initiator **154** comprises a tether **156** extending between the launcher **140** and the igniter **78** of the propulsion device **74**. Prior to launch, the tether **156** is wound onto a rotatably supported reel **158**. Upon launch, an upper end **160** of the tether **156** is attached to the igniter **78** of the propulsion device **74**, such that the tether **156** unwinds from the reel **158**. A lower end **162** of the tether **156** is fixed to the launcher **140**, such that when the vehicle **11** travels the length of the tether **156**, the upper end **160** disconnects from the igniter **78** thereby activating the igniter **78** of the propulsion device **74**.

Further illustratively, a safe and arm device **164** is supported by the body **12** and is configured to arm the responder **126** when the vehicle **11** has reached a second predetermined distance from the launcher **140** (illustratively 100 feet from the launcher **140**). Illustratively, the safe and arm device **164** includes a fiber optics cable **166** releasably coupled to the controller **80** in an unarmed condition. Prior to launch, the fiber optics cable **166** is wound onto a rotatably supported reel **168**. Upon launch, an upper end **170** of the fiber optics cable **166** is attached to the controller **80**, such that the cable **166** unwinds from the reel **168**. A lower end **172** of the fiber optics cable **166** is fixed to the launcher **140**, such that when the vehicle **11** travels the length of the cable **166**, the upper end **170** disconnects from the controller **80**. In response, the controller **80** activates the trigger sensor **118**.

The case **142** is portable such that it may be easily transported by a single operator. Handles **174** may be coupled to the exterior of the case **142** to facilitate manipulation of the launcher **140**. An activation switch **176** may be provided to conduct a pre-launch system check. Upon activation of the switch **176**, an indicator or ready light **178** may be illuminated to provide a ready indication to the operator.

An illustrative method of operation of the system **10** of the present disclosure is shown in FIGS. **8**A-**10**. Initially at step **202** of FIG. **10** and as illustrated in FIG. **8**A, the launcher **140** is positioned in a deployment position and the cover **143** is removed from the case **142** thereby exposing the vehicle **11**. As noted above, the launcher **140** is portable and illustratively may be supported by the operator. Alternatively, the launcher **140** may be supported on the ground or by a support stand (not shown). Once the case **142** is properly supported, the operator moves the activation switch **176** to an "ON" or "ARM" position. The controller **80** initializes the system **10** and conducts a components check. The ready light **178** is illuminated to indicate system ready status.

Once the launcher **140** is ready to launch, at block **204** the operator aims the case **142** in a desired vector (typically from between negative 30 degrees to positive 60 degrees relative to horizontal). Next, the operator pulls the release pin. The

spring biased catapult thereby forces the vehicle **11** upwardly into the air and away from the launcher **140** as shown in FIG. **8**B.

At decision block **206**, a first distance from the launcher **140** is measured by the delay initiator **154**, illustratively the tether **156**. If the first distance exceeds a predetermined value defined by the length of the tether **156** (illustratively 10 feet), then the propulsion device **74** is activated at block **208**. More particularly, the tether **156** causes a pin to puncture the igniter **78** and cause activation of the rocket motor **76**. The vehicle **11** continues under power by the propulsion device **74** and under guidance from the flight control system **82** and the autopilot **84**. Illustratively, the vehicle **11** travels with the nose portion **72** elevated by approximately 60 degrees in this mode.

At decision block **210** and as shown in FIG. **8**C, a second distance from the launcher **140** is measured by the safe and arm device **164**, illustratively the fiber optics cable **166**. If the second distance exceeds a predetermined value defined by the length of the fiber optics cable **166** (illustratively 100 feet), then the trigger sensor **118** is armed at block **212**. More particularly, the upper end **170** of the fiber optics cable **166** is disconnected from the controller **80**. At this point, the controller **80** detects the disconnection of the fiber optics cable **166** and the trigger sensor **118** is thereby armed.

In certain further illustrative embodiments, the responder **126** will include a second safe and arm device that will arm the responder **126** only if multiple preconditions are satisfied. Illustratively, the responder **126** will be armed if the controller **80** determines that: (1) the vehicle **11** is travelling on the proper flight vector; (2) the trigger sensor **118** has been armed; and (3) the fiber optics cable **166** has been disconnected from the controller **80**. If any of these conditions are false, then the controller **80** executes a "dead-man" failsafe condition and flight of the vehicle **11** is suspended. The vehicle **11** may then be retrieved by the operator.

At decision block **214** and as shown in FIG. **9**, the navigation system **86** of the controller **80** determines when the vehicle **11** has reached the desired target area **111**. Once the target area **111** has been reached the controller **80** enters a search mode at block **216**, where the acquisition sensor **94** starts looking for a desired target **98**. More particularly, the optical sensor **100** is positioned downwardly by the gimbal device **114**, illustratively at a 30 degree downward view angle.

During the search mode, the flight control system **82** and the autopilot **84** of the controller **80** causes the vehicle **11** to begin a downward spiral path as shown in FIG. **9**. During this downward spiral path, the optical sensor **100** is searching for predetermined target **98**. More particularly, the VPS **102** compares the collected image **110** to a stored image of the desired target **98**. As further detailed herein, filter software with masking conditions look for a "hot spot" in a target area **111** below the vehicle **11**. If the VPS **102** determines that the collected image **110** and the stored image are substantially identical, then the controller **80** acquires the target **98**. Moreover, the VPS **102** attempts to match parametric goals and target recognition by comparing temperature indications to pixels in mask. When a "hot spot" is found, then the next filter is applied by the VPS **102** as a comparison with a stored mask forms and pattern recognition library (e.g. enemy hot weapon, etc.). Upon a match, the target is acquired and the controller **80** enters a terminal mode at block **220**.

In the terminal mode, the flight control system **82** and the autopilot **84** direct the vehicle **11** directly to the target **98** (i.e. begins a "terminal dive"). During terminal flight to the target **98**, the VPS **102** updates the flight path to the target **98** during regular intervals (i.e. every 0.2 seconds). If the target **98** moves, the VPS **102** will track the target and send corrected data to the autopilot **84**. If the target **98** is lost by the VPS **102**, then the autopilot **84** may enter a coast track mode and fly to the last best estimate of the target **98** coordinates.

If no target is acquired at block **218** (or the controller **80** fails to enter the coast track mode identified above), then the vehicle **11** may continue on a vector flight until the propulsion device **74** exhausts its fuel supply. The controller **80** may cause self-destruction of the vehicle **11** based upon a trigger signal from a heat sensor (not shown) in thermal communication with the propulsion device **74**.

In other illustrative embodiments, the controller **80** may cause self-destruction of the vehicle **11** after completing a predefined number (illustratively three) of circular orbits in the search mode. In this final search mode, the vehicle **11** illustratively makes counter clockwise orbits in long sweeping circular patterns. If no target **98** is acquired or if the vehicle **11** comes in proximity to the ground, the vehicle **11** will self-destruct. If the target **98** is acquired in the final target search mode, then vehicle **11** will be directed to the target **98** via the controller **80** in the manner detailed above.

Upon reaching desired proximity to the target **98** as determined in block **222**, the trigger sensor **118** is activated at block **224**. More particularly, the light emitted from the LED emitter **120** is received by the receiver **122** thereby defining a stimulus. Upon receiving of the light by the receiver **122**, the responder **126** is activated. Illustratively, the responder **126** may be an explosive which is thereby detonated. If the trigger is not sensed at block **222** after the vehicle **11** enters the terminal phase, and after a predetermined time limit is exceeded at block **226**, the explosive may detonate at block **224**.

While this invention has been described as having an exemplary design, the present invention may be further modified within the spirit and scope of this disclosure. This application is therefore intended to cover any variations, uses, or adaptations of the invention using its general principles. Further, this application is intended to cover such departures from the present disclosure as come within known or customary practice in the art to which this invention pertains.

What is claimed is:

1. An aerial vehicle system, the system comprising:

an unmanned aerial vehicle and a portable launcher;

wherein said unmanned aerial vehicle comprises:

a body defining a longitudinal axis,

a first wing extending laterally in a first direction from the body,

a second wing extending laterally in a second direction from the body, the second direction being opposite the first direction,

a first flight control surface supported by the body and configured to control pitch of the vehicle,

a second flight control surface supported by the body and configured to control yaw of the vehicle,

a controller including a flight control system operably coupled to the first flight control surface and the second flight control surface,

a propulsion device operably coupled to the body;

an acquisition sensor including an optical receiver for detecting a target, the optical receiver including a video processor and a lens to direct light to the video processor, wherein the video processor including a focal plane array having a collector grid to receive the light from the lens;

a navigation system including an inertial measurement system for detecting pitch, roll, and yaw of the aerial

vehicle, and an inertial navigational system to determine position, orientation, and velocity of the aerial vehicle;

a trigger sensor configured to generate a signal in response to a predefined stimulus; and

a responder in electrical communication with the controller and configured to be activated in response to the signal from the trigger sensor;

wherein said portable launcher including a support to hold the body in a stored mode of operation, and a deployment mechanism to propel the body upwardly into the air in a launch mode of operation;

wherein the deployment mechanism comprises a catapult operably coupled to the support, the body supporting a hook configured to engage the catapult in the stored mode;

wherein the controller is in communication with the acquisition sensor, and the controller adjusts the flight control surfaces to reposition the target within the center of the collector grid of the video processor;

wherein the trigger sensor includes a plurality of light emitting diodes and a plurality of receivers configured to receive light from the plurality of light emitting diodes and in electrical communication with the controller;

wherein said acquisition sensor is mounted within a repositionable receiver assembly adapted to direct said optical receiver downwardly from the body and configured to commence target identification processing when the navigation system determines the aerial vehicle has reached an area of interest and enters a search mode.

2. The system of claim **1**, further comprising:

a responder in electrical communication with the controller; and

a safe and arm device configured to arm the responder at a predetermined distance from launch.

3. The system of claim **2**, wherein the safe and arm device includes a fiber optics cable releasably coupled to the controller in an unarmed condition.

4. The system of claim **1**, wherein the controller operates in said search mode of operation when the acquisition sensor actively seeks to identify the target and causes the flight control surfaces to direct the aerial vehicle in a downward spiral flight path, a terminal mode of operation when the acquisition sensor detects a predefined target and causes the flight control surfaces to direct the body toward the target, and an activation mode of operation when the trigger sensor detects the predefined stimulus.

5. The system of claim **1**, wherein the responder comprises an explosive detonated by the controller in response to a signal from the trigger sensor.

6. The system of claim **1**, wherein said plurality of light emitting diodes are positioned on different positions of the unmanned aerial vehicle including a front, top, and side sections of said unmanned aerial vehicle.

7. The system of claim **1**, wherein said acquisition sensor is adapted to compare a collected image to a stored image of the target.

8. The system as of claim **7**, wherein said acquisitions sensor further comprises a filter processing section with masking conditions adapted to determine if said collected image has a hot spot in said area of interest below the unmanned aerial vehicle, wherein if said acquisition sensor determines that a collected image and the stored image are substantially identical, then the controller acquires the target and activates additional filter processing sections to determine if said target is a valid target.

9. The system as in claim **8**, wherein said additional filter processing comprises attempts to match parametric goals and engage in target recognition by comparing temperature indications to pixels in a mask, wherein when said hot spot is found, then a next filter is applied by the acquisition sensor as a comparison with at least one or more stored mask forms and pattern recognition library.

10. The system as in claim **9**, wherein the controller operates in said search mode of operation when the acquisition sensor actively seeks to identify the target and causes the flight control surfaces to direct the aerial vehicle in a downward spiral flight path, said controller operates in a terminal mode of operation when the acquisition sensor detects a predefined target upon a match of at least one said stored said mask forms or at least one pattern recognition data in said pattern recognition library and causes the flight control surfaces to direct the body toward the target, and said controller operates in an activation mode of operation when the trigger sensor detects the predefined stimulus.

11. The system as in claim **1**, where said catapult is adapted to engage with said hook such that said catapult applies force to said hook to launch said body away from said deployment mechanism.

* * * * *