US007885001B2

(12) **United States Patent**
Greer et al.

(10) **Patent No.: US 7,885,001 B2**
(45) **Date of Patent: Feb. 8, 2011**

(54) **TILT LOCK MECHANISM AND METHOD FOR A MOVEABLE OPTICAL OR DISPLAY DEVICE**

(75) Inventors: **Charles Greer**, Bloomington, IN (US); **Travis Davis**, Loogootee, IN (US)

(73) Assignee: **The United States of America as represented by the Secretary of the Navy**, Washington, DC (US)

(*) Notice: Subject to any disclaimer, the term of this patent is extended or adjusted under 35 U.S.C. 154(b) by 87 days.

(21) Appl. No.: **12/027,572**

(22) Filed: **Feb. 7, 2008**

(65) **Prior Publication Data**

US 2009/0200447 A1 Aug. 13, 2009

(51) **Int. Cl.**
G02B 23/00 (2006.01)

(52) **U.S. Cl.** **359/409**; 359/408; 359/410

(58) **Field of Classification Search** 248/682; 359/409, 408, 407, 405, 430, 413, 414
See application file for complete search history.

(56) **References Cited**

U.S. PATENT DOCUMENTS

4,170,792 A * 10/1979 Higgs 2/10
4,449,787 A 5/1984 Burbo et al.
4,689,834 A 9/1987 McCarthy et al.
5,179,735 A 1/1993 Thomanek
5,506,730 A * 4/1996 Morley et al. 359/815
5,703,354 A * 12/1997 Wannagot et al. ..... 250/214 VT
5,914,816 A 6/1999 Soto et al.
5,949,575 A * 9/1999 Matsumoto 359/412
6,457,179 B1 * 10/2002 Prendergast 2/6.2
6,462,867 B2 10/2002 Choinere
6,462,894 B1 10/2002 Moody
6,472,776 B1 10/2002 Soto et al.
6,493,137 B1 * 12/2002 Solinsky et al. 359/409
6,662,370 B1 12/2003 Buchanan, Jr.
6,667,832 B2 * 12/2003 Caplan et al. 359/409
6,912,727 B2 7/2005 Buchanan, Jr.
6,924,931 B1 * 8/2005 Lam et al. 359/404
6,957,449 B2 10/2005 Prendergast
2005/0111097 A1 * 5/2005 Iannarelli et al. 359/409
2006/0143764 A1 * 7/2006 Reed et al. 2/6.2
2007/0012830 A1 * 1/2007 Prendergast 248/200

* cited by examiner

Primary Examiner—Amy J Sterling
(74) *Attorney, Agent, or Firm*—Christopher A. Monsey

(57) **ABSTRACT**

An optical device may include at least one optical element and a coupling section adapted to control relative movement between the at least one optical element and the coupling section. The coupling section may include an engaging element and a detent mechanism adapted to adjustably lock the at least one optical element in a plurality of rotational positions. The rotational positions may include rotational positions around a first axis that is substantially perpendicular to a second axis of the at least one optical element, the second axis being a substantially longitudinal axis of the at least one optical element.

15 Claims, 3 Drawing Sheets

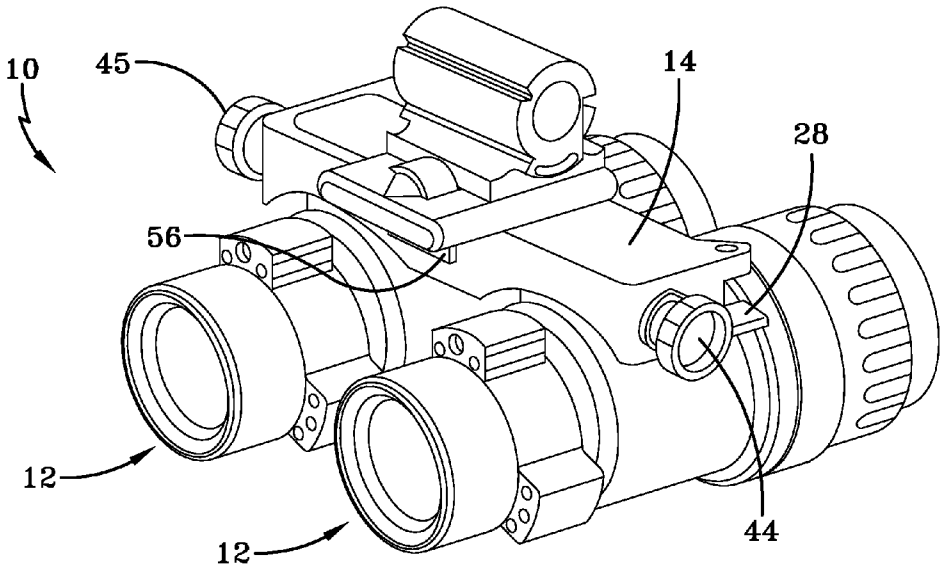

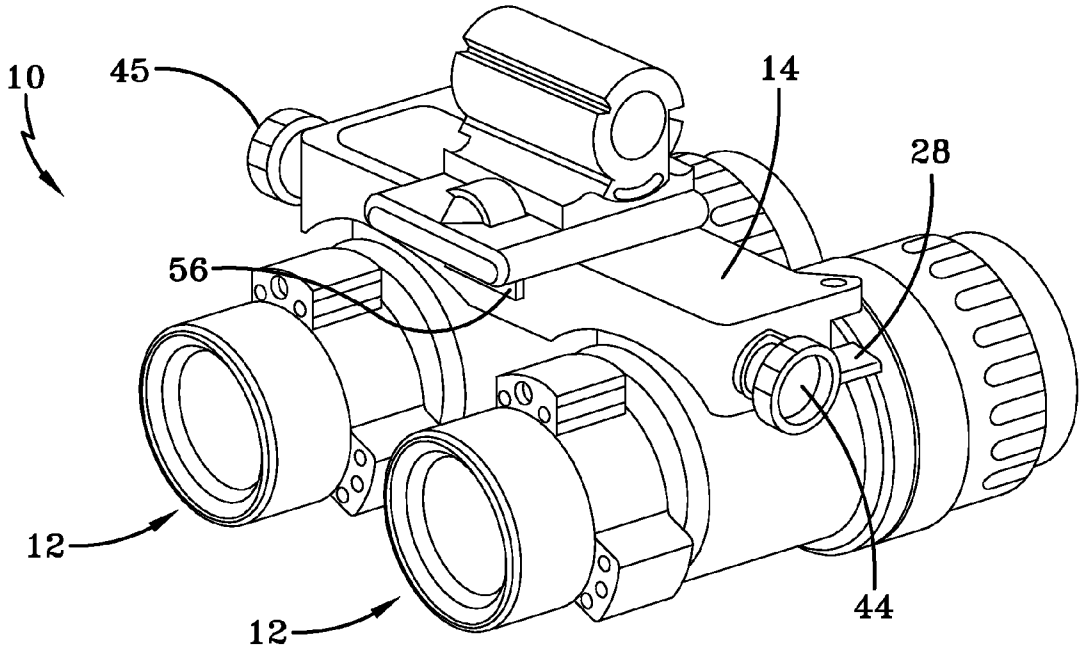

FIG-1

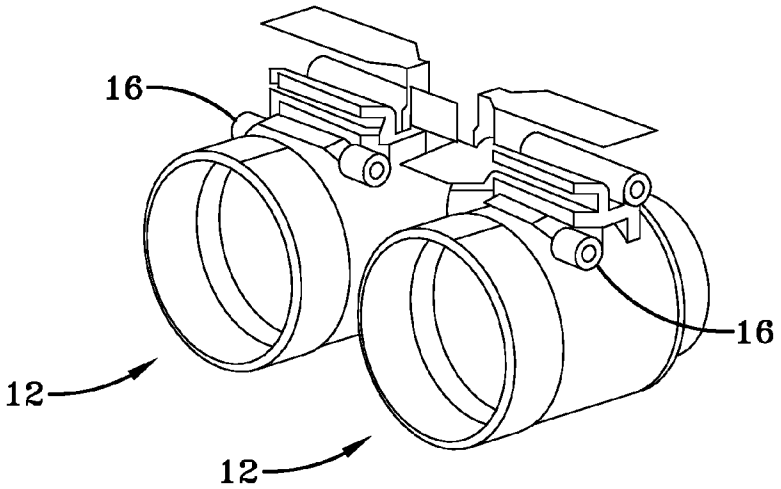

FIG-2

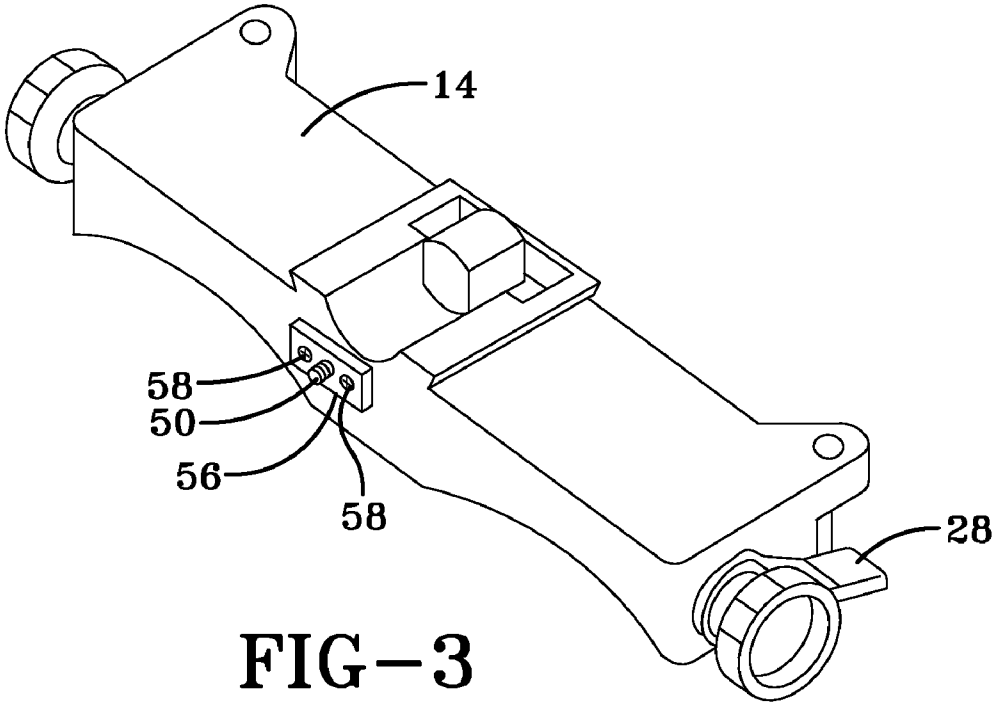

FIG-3

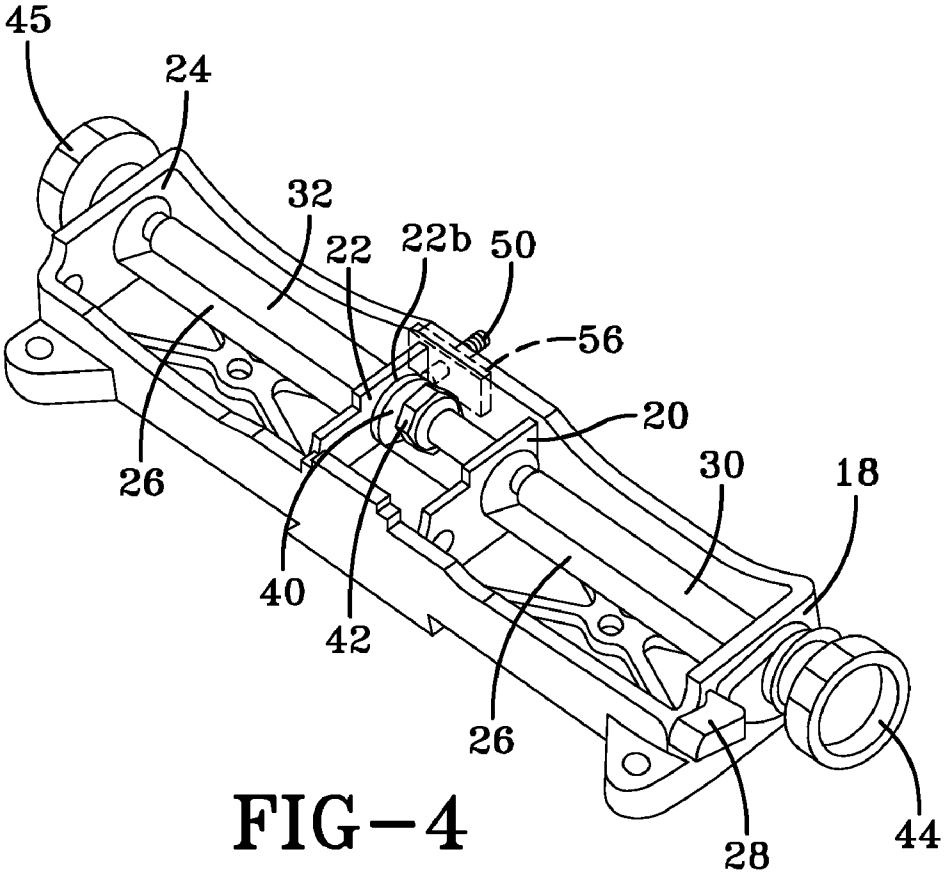

FIG-4

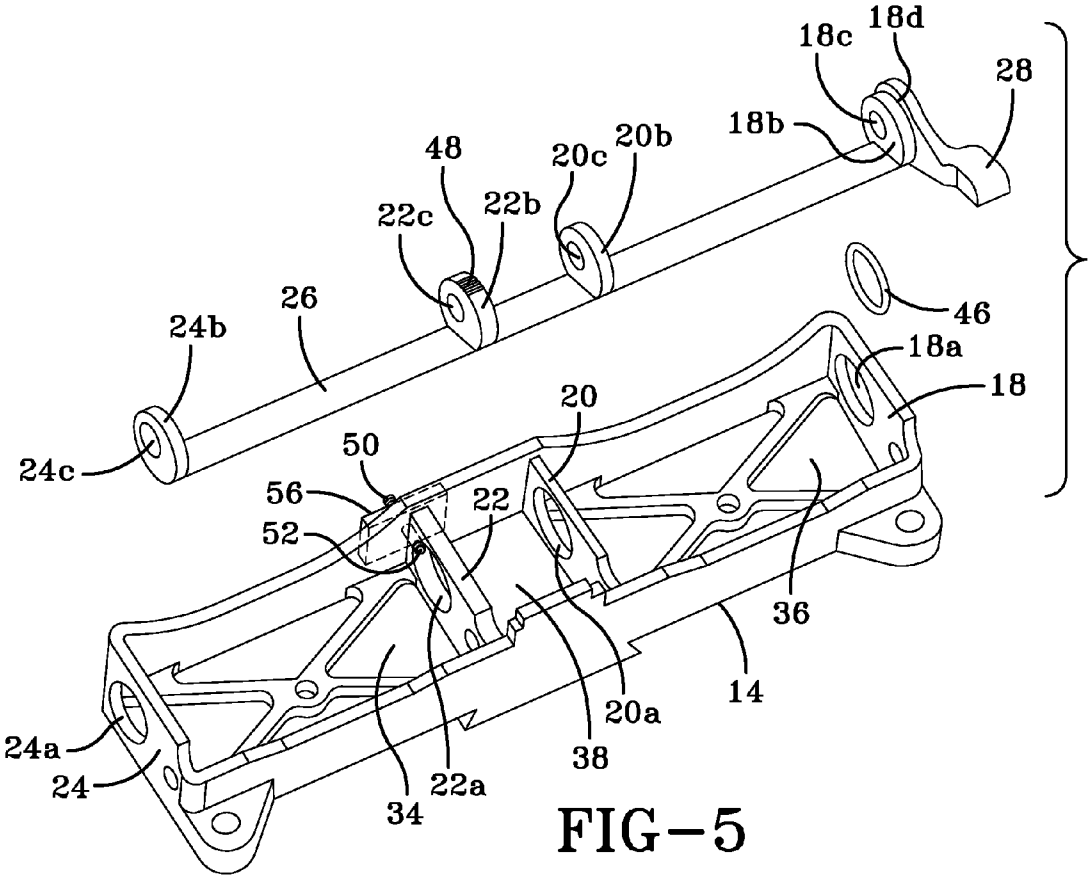

FIG-5

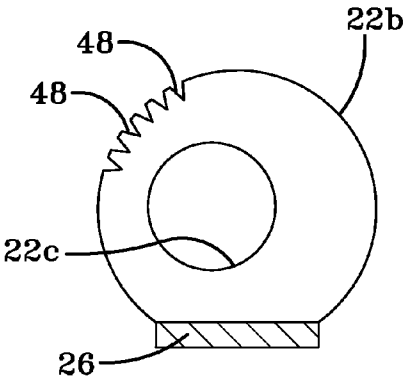

FIG-6

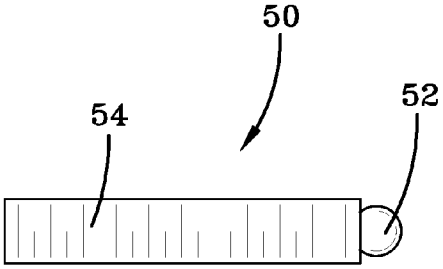

FIG-7

TILT LOCK MECHANISM AND METHOD FOR A MOVEABLE OPTICAL OR DISPLAY DEVICE

STATEMENT REGARDING FEDERALLY SPONSORED RESEARCH OR DEVELOPMENT

The inventions described herein may be manufactured, used and licensed by or for the U.S. Government.

BACKGROUND OF THE INVENTION

The invention relates to tilt lock mechanisms. A need exists to improve locking mechanisms for optical devices based on new designs which correlate eye orientation with exterior objects. For example, virtual reality, head mounted heads up displays/visors or Night Vision Goggles (NVG) worn by airline pilots may be integrated with onboard system. Failure of the NVG to remain locked in a selected position may cause a system to fail to operate or interact with other systems which require a specific orientation, steadiness of the head mounted device or spatial relationship with exterior objects.

SUMMARY OF THE INVENTION

In one aspect, the invention may include at least one optical element and a coupling section adapted to control relative movement between the at least one optical element and the coupling section. The coupling section may include an engaging element and a detent mechanism adapted to adjustably lock the at least one optical element in a plurality of rotational positions. The rotational positions may include rotational positions around a first axis that is substantially perpendicular to a second axis of the at least one optical element, the second axis being a substantially longitudinal axis of the at least one optical element.

The engaging element and the detent mechanism are adapted to allow movement around the first axis when a force is applied to rotate the at least one optical element around the first axis, the force being sufficient to displace a first element of the engaging element and thus permit incremental rotational movement of the at least one optical element.

BRIEF DESCRIPTION OF THE DRAWING

In the drawings, which are not necessarily to scale, like or corresponding parts are denoted by like or corresponding reference numerals.

FIG. **1** is a perspective view of a binocular night vision goggle.

FIG. **2** is a perspective view showing how the binocular night vision assembly is coupled to a housing.

FIG. **3** is a top perspective view of a housing for supporting a binocular night vision goggle.

FIG. **4** is a bottom perspective view of a housing for supporting a binocular night vision goggle.

FIG. **5** is an exploded perspective view of a housing, eccentric shaft, and o-ring.

FIG. **6** is a side view of a flange.

FIG. **7** is a side view of a plunger.

DETAILED DESCRIPTION OF THE PREFERRED EMBODIMENTS

FIG. **1** is a perspective view of a binocular night vision goggle **10**. The binocular night vision goggle **10** may use a pair of monocular night vision scopes (optical elements) **12**

that may be mounted and associated with one another in such a way as to provide the user of the device **10** with binocular vision. The night vision monoculars **12** may be suspended in front of a user's eyes by an elongated housing (shelf) **14**. Housing **14** may have a generally rectangular shape. Depending from the housing **14** may be a pair of spaced apart mounts **16** (FIG. **2**) for mounting the monoculars **12**.

The interpupillary distance (IPD) is defined as the distance between the user's pupils. To adjust the horizontal spacing between the monoculars **12** to match the IPD of a user, an IPD adjustment mechanism may move the monoculars **12** toward each other and away from each other. Part of the IPD mechanism may be located on the outside of housing **14** and part of it may be located between the walls of housing **14**.

Referring to FIGS. **4** and **5**, the bottom of housing **14** may be divided into three sections **34**, **36**, **38** by four walls **18**, **20**, **22**, and **24**. A circular aperture may be located inside each of the walls **18**, **20**, **22**, **24**. Aperture **18***a* may be located in wall **18**, aperture **20***a* may be located in wall **20**, aperture **22***a* may be located in wall **22**, and aperture **24***a* may be located in wall **24**.

Flanges **18***b*, **20***b*, **22***b*, and **24***b* of an eccentric shaft **26** may be rotatably received in the apertures **18***a*, **20***a*, **22***a*, **24***a*. Eccentric shaft **26** may be a thin elongate blade member. Inside each of the flanges **18***b*, **20***b*, **22***b*, **24***b* may be off-center apertures **18***c*, **20***c*, **22***c*, and **24***c*. A pivot lever **28** of the eccentric shaft **26** may be part of flange **18***b* and may extend outwardly of one end of the housing **14**.

Rotatably received in apertures **18***c* and **20***c* may be an IPD threaded shaft **30**. A monocular **12** (FIGS. **1** and **2**) may be mounted onto IPD threaded shaft **30**. One end of IPD threaded shaft **30** may extend through aperture **18***c* in flange **18***b*, which may be in aperture **18***a* of wall **18**. Consequently, this end of IPD threaded shaft **30** may extend from the space in section **36** at the underside of housing **14** to the outside of wall **18**. The other end of IPD threaded shaft **30** may extend through aperture **20***c* in flange **20***b*, which may be in aperture **20***a* of wall **20**. Consequently, this end of IPD threaded shaft **30** may extend from space **36** at the underside of housing **14** into the space in section **38** at the underside of housing **14**.

Rotatably received in apertures **22***c* and **24***c* may be an IPD threaded shaft **32**. Another monocular **12** (FIGS. **1** and **2**) may be mounted onto IPD threaded shaft **32**. One end of IPD threaded shaft **32** may extend through aperture **24***c* in flange **24***b*, which may be in aperture **24***a* of wall **24**. Consequently, this end of IPD threaded shaft **32** may extend from the space in section **34** at the underside of housing **14** to the outside of wall **24**. The other end of IPD threaded shaft **32** may extend through aperture **22***c* in flange **22***b*, which may be in aperture **22***a* of wall **22**. Consequently, this end of IPD shaft **32** may extend from space **34** at the underside of housing **14** into the space in section **38** at the underside of housing **14**.

The end of IPD threaded shaft **32** that may extend into space **38** from space **34** may be threaded and may carry a washer member **40** which may be secured axially on the IPD threaded shaft **32** by a threaded nut **42**. Consequently, IPD threaded shaft **32** may not move out of aperture **22***c* in flange **22***b*. The end of IPD threaded shaft **30** that may extend into space **38** from space **36** may be threaded and may carry a washer member (not shown) which may be secured axially on the IPD threaded shaft **30** by a threaded nut (not shown). Consequently, IPD threaded shaft **30** may not move out of aperture **20***c* in flange **20***b*.

The end of IPD threaded shaft **32** that may extend from space **34** to the outside of wall **24** may be attached to a control knob **44**. The end of IPD threaded shaft **30** that may extend from space **36** to the outside of wall **18** may be attached to a

control knob **45**. Each of the monoculars **12** may be respectively coupled to the IPD shafts **30** and **32**. Control knobs **44** and **45** may be rotated independently of each other. When control knobs **44** and **45** are rotated, they may respectively cause IPD shafts **30** and **32** to rotate thereby moving the monoculars **12** toward and away from each other to adjust for varying eye separations.

As explained above, lever **28** may be part of flange **18***b*. Each of the flanges **18***b*, **20***b*, **22***b*, **24***b* may be connected together by the eccentric shaft **26**. Each of the flanges **18***b*, **20***b*, **22***b*, **24***b* may have an off-center aperture. Off-center apertures **18***c* and **20***c* may receive IPD threaded shaft **30** and off-center apertures **22***c* and **24***c* may receive IPD threaded shaft **32**. Rotation of lever **28** may rotate eccentric shaft **26** and flanges **18***b*, **20***b*, **22***b*, **24***b*, shaft **30** and shaft **32** relative to housing **14**.

Because the monoculars **12** may be coupled to shafts **30** and **32**, rotation of lever **28** may tilt each of the monoculars **12** relative to housing **14** and relative to a user's eyes. Thus, the eccentric shaft **26** and its associated flanges provide a means of tilting the line-of-sight (longitudinal axis) of the two monoculars **12** simultaneously. The lever **28** may be used to adjust the tilt of the monoculars **12** to align with the user's line-of-sight. That is, the lever **28** may be used to rotate the monoculars **12** about an axis that is substantially perpendicular to the longitudinal axis through the monoculars **12**.

As shown in FIG. **5**, the eccentric shaft **26** may use an o-ring **46** to provide rotational friction between the eccentric shaft **26** and the housing **14**. The o-ring **46** may be placed in a groove **18***d* of flange **18***b*, near adjustment lever **28**. After the eccentric shaft **26** is assembled to the housing assembly, the o-ring **46** may provide frictional resistance against the housing **14**. The rotational friction force may occur between o-ring **46** and aperture **18***a* of wall **18** when flange **18***b* is inserted into aperture **18***a*. Thus, the o-ring **46** may act as a frictional resistor between the eccentric shaft **26** and the housing **14**.

The frictional interface between o-ring **46** and aperture **18***a* may be controlled by tight tolerances between flange **18***b* of the eccentric shaft **26**, the housing **14**, and the o-ring **46**. The o-ring **46** may provide some rotational friction for shaft **26**. Further rotational friction and a tilt adjustment lock may be provided by a plunger and detent mechanism.

FIG. **6** is an enlarged, side view of flange **22***b* shown in FIG. **5**. Flange **22***b* may include a plurality of detents **48** formed on its circumference. Detents **48** may be in the form of, for example, dimples, grooves, etc. As shown in FIG. **6**, detents **48** may comprise substantially V-shaped grooves that extend transversely across the width of the flange **22***b*. The sides of the V-shaped grooves may form about a 45 degree angle. Each detent **48** may correspond to a locked position of the device **10**. The number of detents **48** may vary depending on the number of locked positions desired. The circumferential extent and spacing of the detents **48** may vary depending on the range and precision of tilt adjustment desired. In one embodiment, six detents **48** are circumferentially spaced about 10 degrees apart to produce six locked settings over a sixty degree range of tilt.

FIG. **7** is an exemplary enlarged, side view of a plunger **50** shown in FIGS. **3-5**. Plunger **50** may include a first element comprising a tip **52** for engaging the detents **48**. Tip **52** may be spherical. Tip **52** is outwardly biased by an internal spring (not shown) in plunger **50**. Plunger **50** may include threads **54** for threading into housing **14**. The thickness of housing **14** in the vicinity of plunger **50** may be increased by mounting an exterior plate **56** (FIGS. **3-5**) to housing **14** using, for example, fasteners **58**, plastic welding, adhesives, etc. Plunger **50** may be mounted to housing **14** such that the tip **52** abuts a detent **48** in flange **22***b*. As shown in FIG. **5**, the tip **52** may be located at wall **22**.

As lever **28** (FIGS. **4** and **5**) is rotated, shaft **26** with flange **22***b* rotates. As flange **22***b* rotates, the tip **52** of plunger **50** moves in and out of the detents **48** due to the spring in the plunger **50**. When the desired tilt position is reached, the tip **52** seats in the chosen detent **48** and locks the device **10** in position. The force required to rotate lever **28** to change tilt positions may be altered by, for example, changing the spring force in the plunger **50**. In one embodiment, the plunger **50** is a 4 millimeter diameter plunger with a spring force in the range of about 2.5 Newtons minimum (uncompressed) to about 12.5 Newtons maximum (fully compressed). Of course, other spring forces may be used. The spring force may be small enough to allow one-handed adjustment by the user, yet large enough to prevent movement of the optical elements caused by, for example, vibration.

Another way to adjust the spring force is to move the entire plunger **50** toward or away from the detents **48**. If the plunger **50** is threaded into the housing **14**, the plunger may be adjusted by threading it into or out of the housing **14**. Of course, the tip and internal spring must have sufficient travel to bear against the detents **48** and also be retracted into the plunger **50** as the shaft **26** rotates.

The tilt adjustment and lock mechanism has been described with reference to a night vision goggle. However, the inventive mechanism may be incorporated into a variety of optical devices and may be used for adjustments other than tilt.

While the invention has been described with reference to certain preferred embodiments, numerous changes, alterations and modifications to the described embodiments are possible without departing from the spirit and scope of the invention as defined in the appended claims, and equivalents thereof.

What is claimed is:

1. An optical device, comprising:

at least one optical element; and

a coupling section adapted to control relative movement between said at least one optical element and said coupling section, said coupling section comprising an engaging element and a detent mechanism adapted to adjustably lock said at least one optical element in a plurality of rotational positions around a first axis that is substantially perpendicular to a second axis of said at least one optical element wherein said engaging element comprises a first and second element, said second axis comprising a substantially longitudinal axis of said at least one optical element, wherein said engaging element and said detent mechanism are adapted to allow movement around said first axis when a force is applied to rotate said at least one optical element around said first axis, said force being sufficient to displace said first element of said engaging element and thus permit incremental rotational movement of said at least one optical element, wherein said first element of said engaging element comprises a tip that is removably disposable in said plurality of detents, wherein said engaging element is adapted to be removable from said optical device and adjustable such that said second element of said engaging element is adapted to be selectively positioned to move said first element closer to or farther from said detent mechanism and thereby selectively increase or decrease a compressive or recovery force exerted on said detent mechanism by said first element;

said detent mechanism further comprises an aperture formed through said detent mechanism parallel with said first axis, said aperture is formed in said detent mechanism such that an outer surface of said detent mechanism defines an eccentric rotation around said first axis when said detent mechanism is rotated around said first axis and thereby positions said plurality of detents closer or farther away from said engaging element.

2. The optical device of claim **1** further comprising a first member rotatably supported by said coupling section and a frictional member adapted to restrict relative movement between said coupling section and said first member, said first member including said detent mechanism.

3. The optical device of claim **2** wherein said detent mechanism comprises a curved surface of said first member, said curved surface including a plurality of detents formed thereon and circumferentially spaced apart.

4. The optical device of claim **3** wherein said first member is a generally elongated member that includes a pivot lever.

5. The optical device of claim **4** wherein said at least one optical element is fixed to said first member for rotation with said first member.

6. The optical device of claim **5** wherein said coupling section comprises a housing, said engaging element is fixed to said housing.

7. The optical device of claim **6** wherein said coupling section comprises a shelf.

8. The optical device of claim **3** wherein said plurality of detents comprise generally V-shaped grooves.

9. The optical device of claim **6** wherein said tip is generally spherical.

10. The optical device of claim **1** wherein said optical device is a night vision goggle.

11. The optical device of claim **10** wherein said at least one optical element comprises two night vision monoculars.

12. The optical device of claim **3** wherein said curved surface comprises a flange.

13. The optical element of claim **6** wherein said engaging element adjustably engages said coupling section with threads.

14. An optical device as in claim **1**, wherein said second element of said engaging element is formed with a plurality of threads on an outer surface of said second element which are adapted to be removably and selectively received into a threaded aperture adapted to receive said engaging element in a housing portion of said optical device.

15. An optical device as in claim **1**, further comprising a longitudinal assembly having at least one section formed into a cylindrical form, said longitudinal assembly is disposed within said aperture of said detent mechanism, said longitudinal assembly also is formed such that said longitudinal assembly extends through apertures formed in opposing sides of said coupling section, said section formed into a cylindrical form is further formed with threads, said at least one optical element is coupled to said section formed into a cylindrical form such that rotation of said longitudinal assembly moves said at least one optical element laterally along a long axis of said longitudinal assembly.

* * * * *