US007966763B1

(12) **United States Patent**
Schneider et al.

(10) **Patent No.: US 7,966,763 B1**
(45) **Date of Patent: Jun. 28, 2011**

(54) **TARGETING SYSTEM FOR A PROJECTILE LAUNCHER**

(75) Inventors: **John F. Schneider**, Huntingburg, IN (US); **Christopher Brown**, Bloomington, IN (US)

(73) Assignee: **The United States of America as represented by the Secretary of the Navy**, Washington, DC (US)

(*) Notice: Subject to any disclaimer, the term of this patent is extended or adjusted under 35 U.S.C. 154(b) by 383 days.

(21) Appl. No.: **12/125,600**

(22) Filed: **May 22, 2008**

(51) **Int. Cl.**
F41C 27/06 (2006.01)

(52) **U.S. Cl.** **42/105**

(58) **Field of Classification Search** 42/105, 42/75.02, 75.04, 77, 75.01; 89/126, 13.1, 89/1.41, 41.16, 41.02, 203, 41.17
See application file for complete search history.

(56) **References Cited**

U.S. PATENT DOCUMENTS

12,522	A *	3/1855	Wolter	89/41.16
1,031,279	A *	7/1912	Maxim	89/41.16
1,270,293	A *	6/1918	Hoexter et al.	124/29
1,311,860	A *	7/1919	Holzwarth	89/1.41
2,876,679	A *	3/1959	Dietsch et al.	89/41.16
2,949,825	A *	8/1960	Walton et al.	89/41.16
3,550,300	A *	12/1970	Roder	42/106
3,641,691	A *	2/1972	Ellis et al.	42/105
3,824,699	A *	7/1974	Lenz et al.	33/334
3,955,299	A *	5/1976	Bullis	42/106
4,195,432	A *	4/1980	Hickman	42/106
4,326,340	A *	4/1982	Blomqvist et al.	89/204
4,574,685	A	3/1986	Sanborn et al.	
4,635,526	A *	1/1987	Mottana et al.	89/1.41
4,689,911	A *	9/1987	White	42/105
4,695,161	A	9/1987	Reed	
5,171,933	A	12/1992	Eldering	
5,555,662	A	9/1996	Teetzel	
5,669,174	A	9/1997	Teetzel	
5,831,718	A	11/1998	Desai et al.	
6,014,923	A *	1/2000	Canaday et al.	89/127
6,269,726	B1	8/2001	McNulty, Sr.	
6,568,118	B1	5/2003	Teetzel	
6,708,597	B2	3/2004	Meyers et al.	
6,886,287	B1	5/2005	Bell et al.	
6,973,865	B1 *	12/2005	Duselis et al.	89/41.05
7,021,188	B1	4/2006	Berkovich et al.	
7,089,845	B2 *	8/2006	Friedli et al.	89/41.05
7,143,539	B2	12/2006	Cerovic et al.	
7,171,776	B2	2/2007	Staley, III	
7,210,392	B2 *	5/2007	Greene et al.	89/41.03
2003/0177897	A1 *	9/2003	Bar	89/41.02
2004/0050240	A1	3/2004	Greene et al.	
2005/0132874	A1 *	6/2005	Cianciolo	89/41.02
2006/0162226	A1	7/2006	Tai	
2008/0148931	A1 *	6/2008	Svensson et al.	89/41.05

* cited by examiner

Primary Examiner — Bret Hayes
Assistant Examiner — Reginald Tillman, Jr.
(74) *Attorney, Agent, or Firm* — Christopher A. Monsey

(57) **ABSTRACT**

A targeting system for determining the distance to a target and, in response thereto, altering the angular position of a projectile launcher relative to a hand held support.

8 Claims, 5 Drawing Sheets

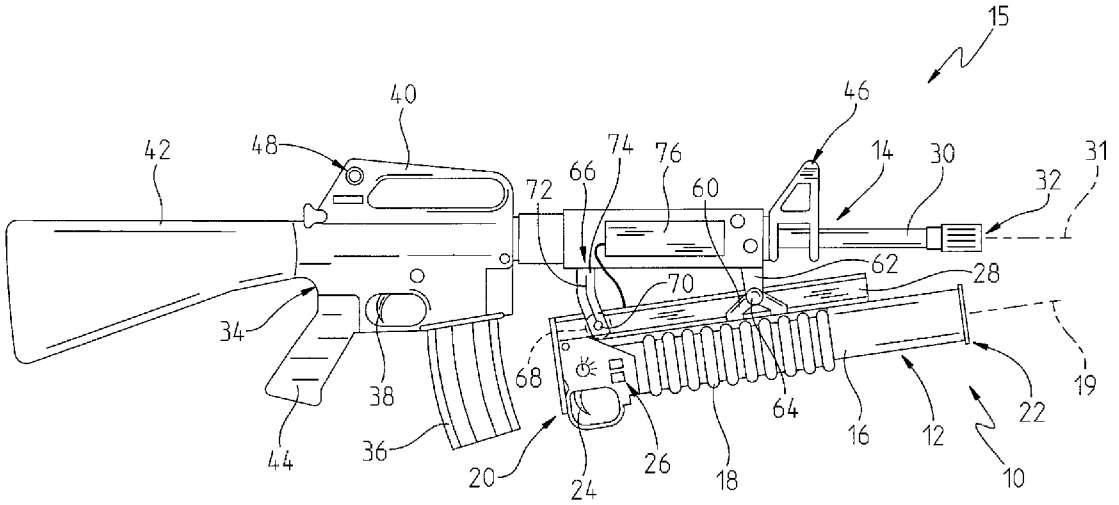

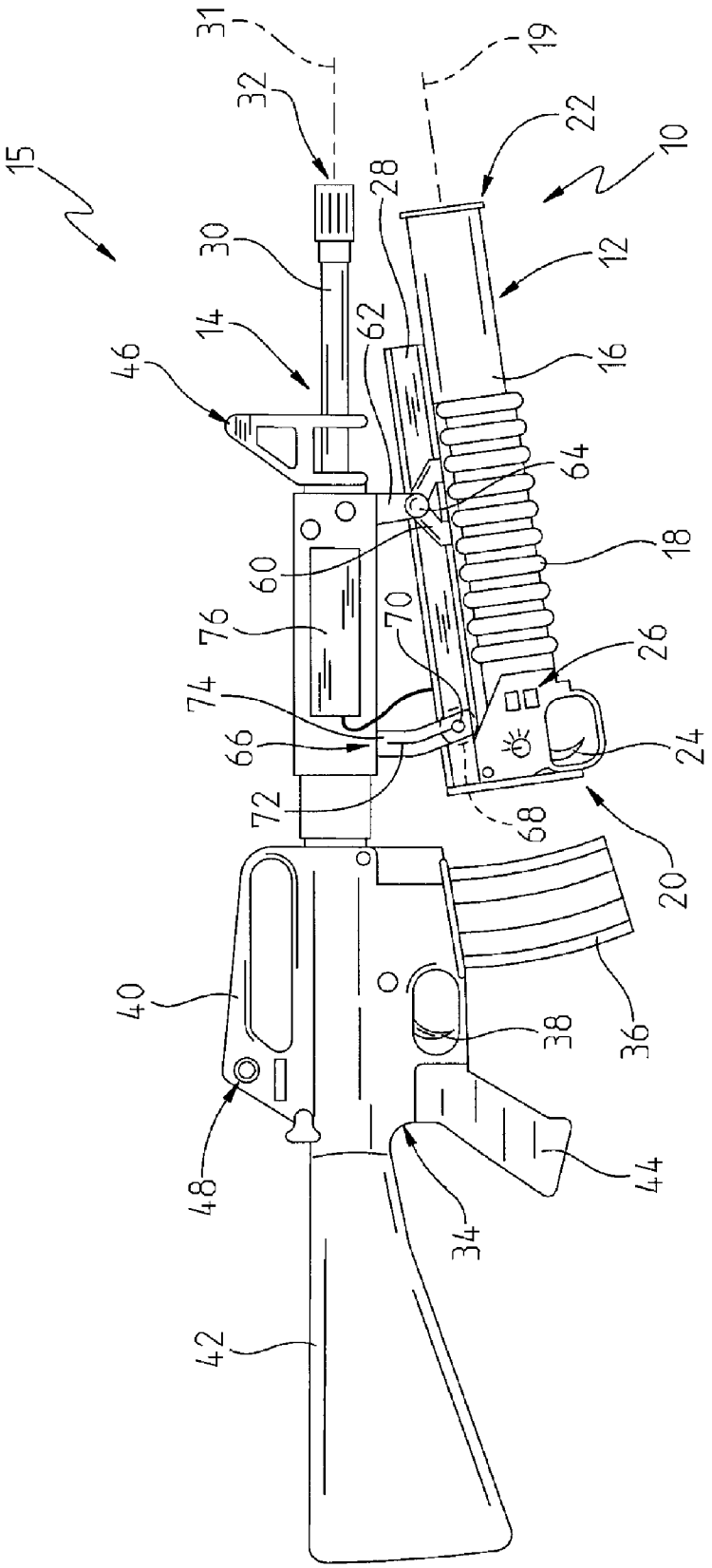
15
31
32
30
14
46
19
22
10
28
12
62
16
64
18
60
76
70
26
74
66
24
72
68
20
40
38
36
48
44
34
42

FIG. 1

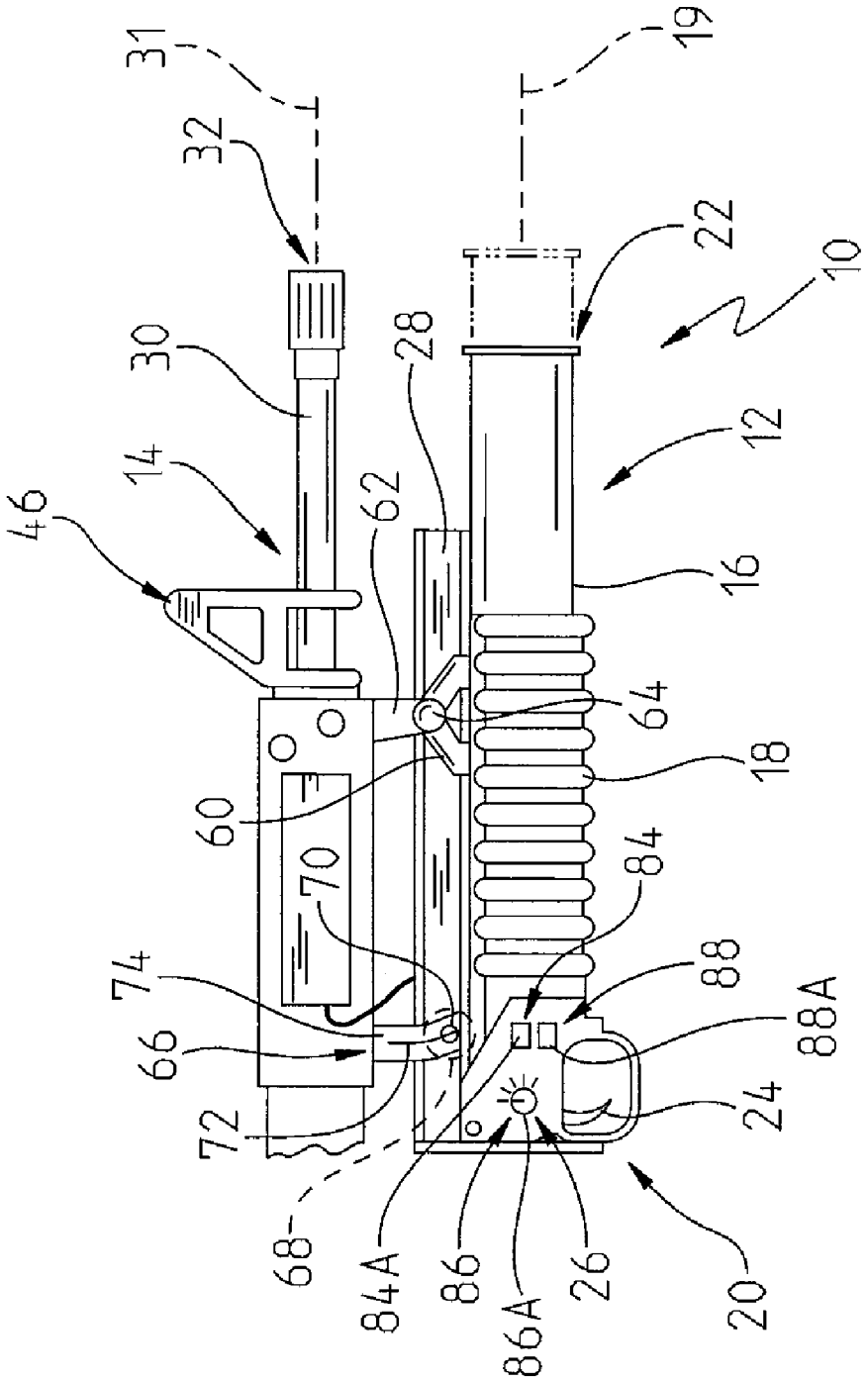
31
32
30
14
46
19
22
10
28
12
62
16
64
18
60
70
84
74
88
66
88A
72
24
68
84A
86
86A
26
20

FIG. 2

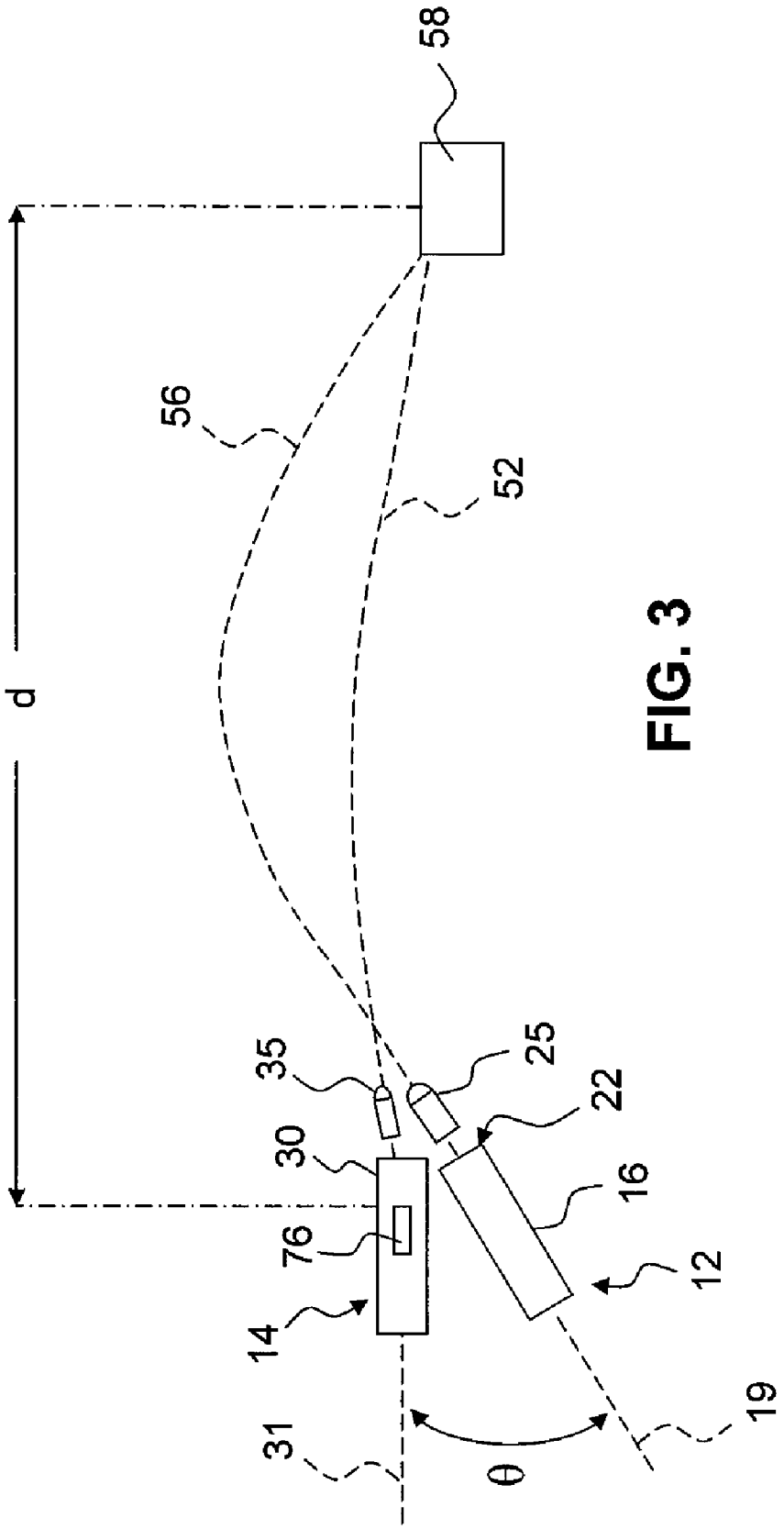

FIG. 3

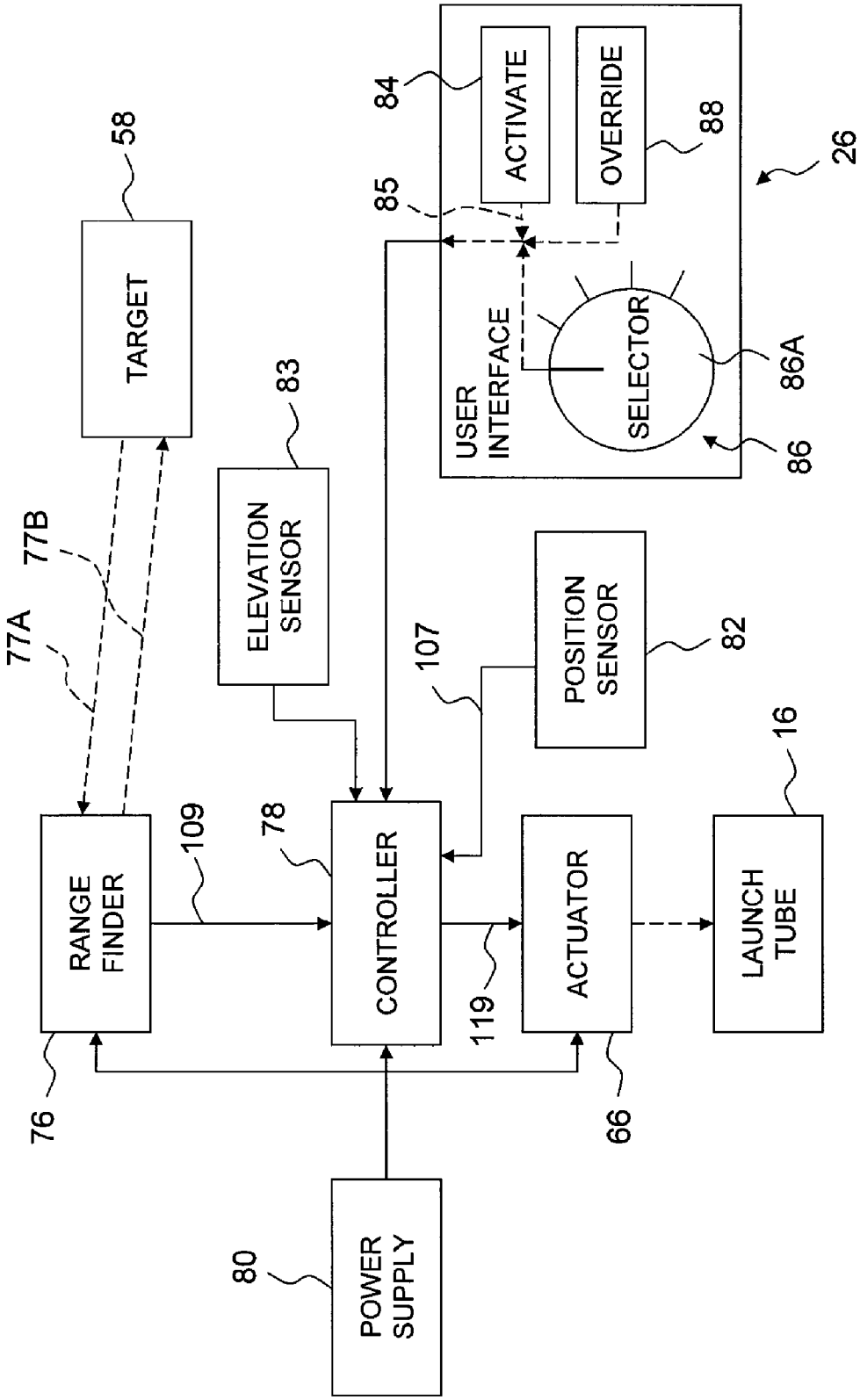
TARGET
58
77A
77B
RANGE FINDER
76
109
ELEVATION SENSOR
83
CONTROLLER
78
107
POSITION SENSOR
82
ACTUATOR
66
119
LAUNCH TUBE
16
POWER SUPPLY
80
USER INTERFACE
ACTIVATE
84
OVERRIDE
88
85
SELECTOR
86A
86
26

FIG. 4

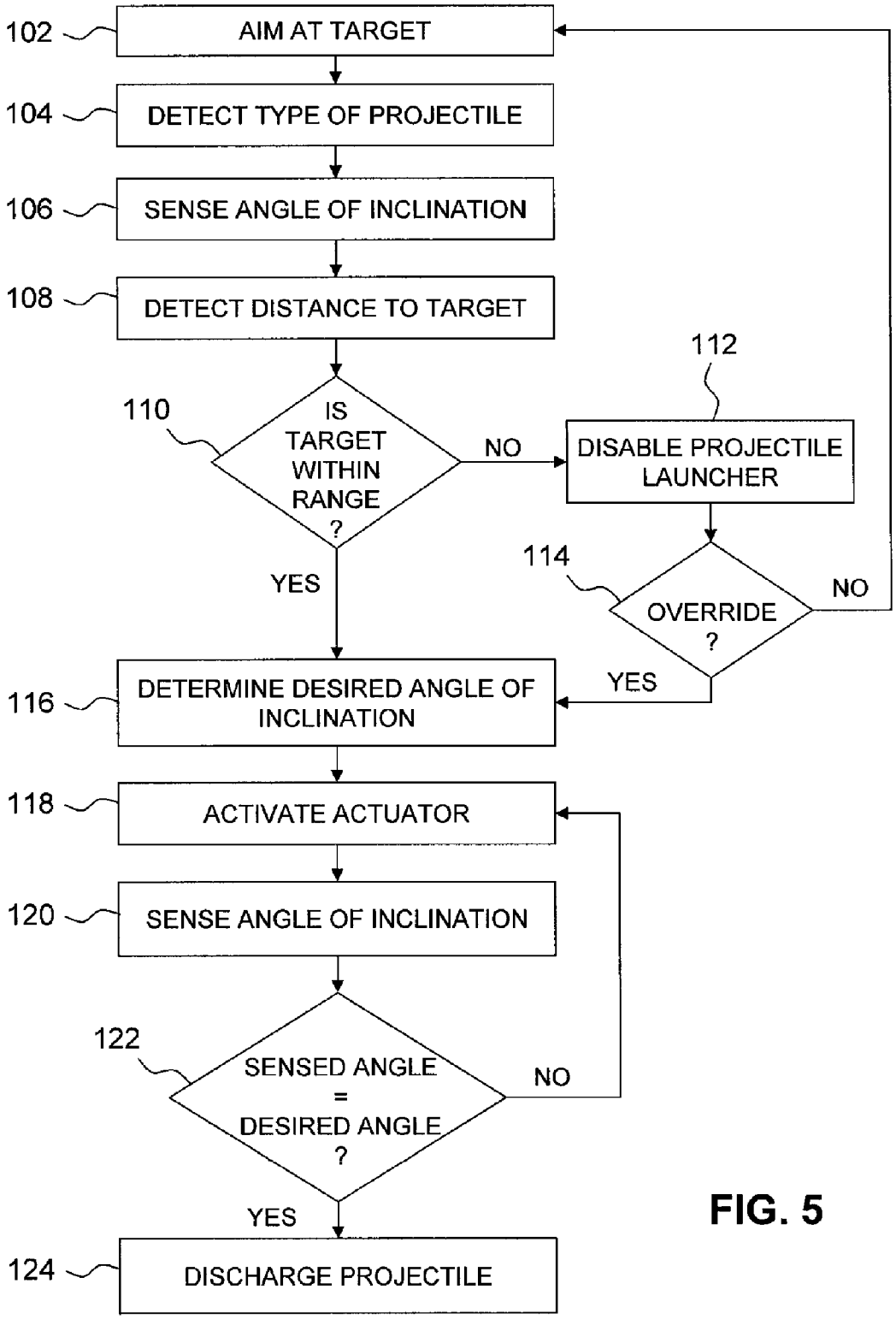
102
AIM AT TARGET
104
DETECT TYPE OF PROJECTILE
106
SENSE ANGLE OF INCLINATION
108
DETECT DISTANCE TO TARGET
110
IS TARGET WITHIN RANGE ?
NO
112
DISABLE PROJECTILE LAUNCHER
114
OVERRIDE ?
NO
YES
YES
116
DETERMINE DESIRED ANGLE OF INCLINATION
118
ACTIVATE ACTUATOR
120
SENSE ANGLE OF INCLINATION
122
SENSED ANGLE = DESIRED ANGLE ?
NO
YES
124
DISCHARGE PROJECTILE

FIG. 5

TARGETING SYSTEM FOR A PROJECTILE LAUNCHER

STATEMENT REGARDING FEDERALLY SPONSORED RESEARCH OR DEVELOPMENT

The invention described herein was made in the performance of official duties by employees of the Department of the Navy and may be manufactured, used and licensed by or for the United States Government for any governmental purpose without payment of any royalties thereon.

BACKGROUND OF THE INVENTION

The present invention relates generally to devices for aiming weapons and, more particularly, to a targeting system for a projectile launcher supported by a hand held support structure.

It is known to couple a projectile launcher to a rifle, thereby giving the user an integrated weapon that may selectively deliver two different types of projectiles. More particularly, the rifle discharges a projectile with a low arc trajectory (such as a bullet), while the projectile launcher discharges a projectile with a high arc trajectory (such as a grenade). Typically, a first targeting sight is provided for the rifle, and a separate second targeting sight is provided for the projectile launcher. As such, the user must switch between different sights for tracking a target when alternating between use of the rifle and the projectile launcher. Switching between sights in order to engage a target can often be a time consuming exercise. Further, targeting for the projectile launcher has conventionally been accomplished through the use of a leaf sight often requiring significant experience for efficient use thereof. As such, there has been an increased emphasis on improving the targeting systems on rifle mounted projectile launchers.

SUMMARY OF THE INVENTION

According to an illustrative embodiment of the present disclosure, a projectile launching apparatus includes a barrel configured to discharge a first projectile, and a projectile launcher supported by the barrel and configured to discharge a second projectile. An actuator is operably coupled to the barrel and the projectile launcher. The actuator is configured to adjust an angle of inclination of the projectile launcher relative to the barrel.

BRIEF DESCRIPTION OF THE DRAWINGS

The foregoing aspects and many of the attendant advantages of this invention will become more readily appreciated as the same become better understood by reference to the following detailed description when taken in conjunction with the accompanying drawings.

FIG. **1** is a side elevational view of the targeting system of the present disclosure operably coupling a projectile launcher to a barrel of a rifle;

FIG. **2** is a detailed side view of FIG. **1**, showing an optional active position of the projectile launcher in phantom;

FIG. **3** is a diagrammatic view showing an illustrative low arc trajectory from a projectile discharged from the barrel of the rifle of FIG. **1**, and a illustrative high arc trajectory of a projectile discharged from the projectile launcher of FIG. **1**;

FIG. **4** is a block diagram showing interaction between various illustrative components of the targeting system of FIG. **1**; and

FIG. **5** is a flow chart of an illustrative method of operating the targeting system of FIG. **1**.

Corresponding reference characters indicate corresponding parts throughout the several views. Although the drawings represent embodiments of various features and components according to the present disclosure, the drawings are not necessarily to scale and certain features may be exaggerated in order to better illustrate and explain the present disclosure. The exemplification set out herein illustrates embodiments of the invention, and such exemplifications are not to be construed as limiting the scope of the invention in any manner.

DETAILED DESCRIPTION OF THE DRAWINGS

For the purposes of promoting an understanding of the principles of the invention, reference will now be made to the embodiments illustrated in the drawings, which are described below. The embodiments disclosed below are not intended to be exhaustive or limit the invention to the precise form disclosed in the following detailed description. Rather, the embodiments are chosen and described so that others skilled in the art may utilize their teachings. It will be understood that no limitation of the scope of the invention is thereby intended. The invention includes any alterations and further modifications in the illustrated devices and described methods and further applications of the principles of the invention which would normally occur to one skilled in the art to which the invention relates.

Referring initially to FIG. **1**, a targeting system **10** according to the present disclosure is shown operably coupling a projectile launcher **12** to a hand held support structure, illustratively a rifle **14**. The projectile launcher **12** and the rifle **14** together define a dual projectile weapons platform **15**. In the illustrative embodiment, the projectile launcher **12** comprises an M203 grenade launcher, while the rifle **14** comprises an M16 (AR**15**) assault rifle. However, it should be appreciated that any suitable projectile launcher **12** may be utilized in connection with the targeting system **10** of the present disclosure. Furthermore, the targeting system **10** of the present disclosure may be utilized with any hand held support structure, including a wide variety of small arms, such as rifle **14**.

With reference now to FIGS. **1** and **2**, the projectile launcher **12** illustratively includes a launch tube or barrel **16** supporting a barrel grip **18**. The launch tube **16** extends along a longitudinal axis **19** between a receiving end **20** and a discharge end **22**. A trigger **24** is operably coupled to the tube **16** in order to mechanically interface with the projectile **25** positioned within the receiving end **20** of the tube **16** and cause activation of a propellant to launch or discharge the projectile from the discharge end **22**. A user interface **26** is supported by the tube **16** and is positioned proximate the receiving end **20** above the trigger **24**. A housing **28** is illustratively coupled to and supported above the tube **16**.

With further reference to FIG. **1**, the rifle **14** includes a barrel **30** having a longitudinal axis **31** and a discharge end **32**. A receiver **34** is coupled to the barrel **30** and is configured to receive projectiles **35** (i.e., bullets) from a magazine **36**. The receiver **34** includes a trigger **38** which is configured to mechanically impact bullets **35** and cause the discharge thereof from the discharge end **32** of the barrel **30**. A handle **40** and a buttstock **42** are coupled to the receiver **34**. A pistol grip **44** is also coupled to the receiver **34** and extends downwardly therefrom in spaced relation to the magazine **36**. A front sight **46** is coupled to the barrel **30**, while a rear sight **48** is supported by the receiver **34**. The front sight **46** and the rear sight **48** are utilized together by a user to aim or engage a target.

As mentioned above, the rifle **14** is configured to discharge projectile **35**, such as a bullet, having a low arc trajectory **52** as diagrammatically illustrated in FIG. **3**. The projectile launcher **12** is configured to discharge projectile **25**, such as a grenade, having a high arc trajectory **56**. As may be appreciated, the angle of inclination θ between the axis **19** of the projectile launcher **12** and the axis **31** of the rifle **14** must be properly established in order for the projectile **25** to reach the intended target **58**.

With reference now to FIGS. **1-4**, the projectile launcher **12** is operably coupled to the rifle **14** for angular movement therebetween and thereby setting the angle of inclination θ to a desired value. More particularly, the projectile launcher **12** includes an upwardly extending bracket **60** coupled to a lower bracket **62** through a pivot pin **64**. An actuator **66** is configured to pivotally move the receiving end **20** of the projectile launcher **12** upwardly and downwardly about the pivot pin **64**. In one illustrative embodiment, the actuator **66** includes a stepper motor **68** operably coupled to a drive wheel or roller **70** configured to move within a track **72** formed within a support bracket **74**. The stepper motor **68** may be operably coupled to the roller **70** through a conventional worm gear mechanism (not shown).

A range input device, illustratively a range finder **76**, is coupled to the rifle barrel **30** and is configured to determine a distance d to the target **58**. More particularly, the range finder **76** may be a conventional laser range finder configured to emit and receive a laser beam **77** aimed at a target. Such laser range finders are known in the art and typically operate by measuring the time difference between the finder **76** from sending a laser beam pulse **77**A to target **58**, to receiving a laser beam pulse **77**B reflected off of the target **58**. While a laser range finder **76** is shown in the illustrative embodiment, other range finders may be used to determine the distance d to the target **58**. In alternative embodiments, the range input device may be configured to permit manual input of the distance d to the target **58**, thereby eliminating the laser range finder **76**.

The range finder **76** is operably coupled to a controller **78**. The controller **78** may comprise a conventional EPROM based control circuit, although software operated controllers could be substituted therefore. A power supply **80**, illustratively a battery, is operably coupled to the range finder **76**, the controller **78**, and the actuator **66**. Both the controller **78** and the power supply **80** are illustratively received within the housing **28** of the projectile launcher **12**. A position sensor **82** is also operably coupled to the controller **78** and is configured to provide an indication of the angle of inclination θ of the longitudinal axis **19** of the projectile launcher **12** to the longitudinal axis **31** of the rifle **14**. In one illustrative embodiment, the position sensor **82** is incorporated within the actuator **66** (e.g. a stepper motor providing feedback by counting the number of increments or "steps" that it takes) such that a separate device is not necessary. An elevation sensor **83** may also be operably coupled to the controller **78** and is configured to provide an indication of the angle of elevation of the longitudinal axis **31** of the riffle barrel **30** to horizontal (i.e. level or cant of the riffle **14**), thereby providing a reference point for the controller **78**.

In further illustrative embodiments, the controller **78** may receive GPS or reference coordinates of the launcher **12** which are compared to firing or target coordinates of the target **58** provided by the user, another person/spotter, an unmanned aerial vehicle (UAV) or other platform. In other words, the target coordinates define the range signal for the controller **78** to determine the required amount and direction of angular movement of the launch tube **16**. Illustratively, the reference and target coordinates may be provided by an automatic information system, such as the Global Command and Control System (GCCS).

The user interface **26** illustratively includes an activate input **84**, such as a push button **84**A, configured to enable the controller **78** to activate the actuator **66**. When the controller **78** is in an inactive or disabled mode, the actuator **66** will not adjust the projectile launcher tube **16** relative to the rifle **14**. As such, the actuator **66** will not unnecessarily adjust the launcher **12** when targeting is not desired. By depressing input **84**, an activate signal **85** is sent to the controller **78** to enable operation of the actuator **66**. In a further illustrative embodiment, the activate input may include a sensor (not shown) operably coupled to the controller **78** and configured to detect forward movement of the launch tube **16**. More particularly, when the projectile launch tube **16** is slid forward relative to the barrel **30** (shown in phantom in FIG. **2**), the controller **78** is enabled to activate the actuator **66**.

The user interface **26** further includes a selector **86**, such as a rotary switch **86**A, which may be manipulated by the user to select between different types of projectiles **25**. For example, various projectiles **25** having different trajectories **56** (due to, for example, propellants providing different initial projectile velocities, and different projectile aerodynamics) may be utilized within the launcher **12**. Such projectiles may include high explosive grenades, non-lethal rounds (e.g., bean bags and rubber bullets), illuminating grenades, smoke grenades, CS gas (i.e., tear gas) grenades, and high explosive dual purpose grenades. By selecting different types of projectiles, the controller **78** provides for the proper adjustment of the launch tube based upon the anticipated trajectory.

The controller **78** may also be configured to deactivate or disable the trigger **24** of the launcher **12** should the distance d detected by the range finder **76** exceed the maximum range of the projectile **25** as determined by the controller **78**. As such, the controller **78** prevents the user from discharging rounds or projectiles which are not likely to hit the target **58**. An override input **88**, such as a push button **88**A, may be manipulated by the user in order to enable the trigger **24** to fire the projectile **25** from the launch tube **16** even if the distance detected d exceeds the maximum range of the projectile **25**.

Referring now to FIG. **5**, an illustrative method of operation of the targeting system **10** of the present disclosure is shown. At block **102**, the user aims at the desired target **58**. At block **104**, the controller **78** detects the type of projectile **25** based upon the input from the selector **86** as manipulated by the user. More particularly, the user illustratively engages target **58** by using the sights **46** and **48** supported by the rifle **14**. Next, at block **106**, the controller **78** receives a position signal **107** from the position sensor **82** representative of the angle of inclination θ of the launch tube **16** relative to the barrel **30**. The range finder **76** detects distance d to the target **58** and provides a range signal **109** indicative thereof to the controller **78** at block **108**. By knowing the type of projectile **25** in the launch tube **16**, and the angle of inclination θ, the controller **78** can determine a projected trajectory **56** based upon the anticipated velocity of the projectile **25** at the discharge end **22** of the launch tube **16**.

At block **110**, the controller **78** queries whether the target **58** is within the maximum range of the projectile **25**. If the distance d exceeds the maximum range of the projectile **25**, then the projectile launcher trigger **24** is disabled at block **112**. A block **114**, the controller **78** queries for activation of the override **88**. If the override **88** is not activated, then the launcher **12** remains disabled. If the override **88** is activated, then the desired angle of inclination θ is calculated by the controller **78**.

The controller **78** illustratively determines the desired angle of inclination θ based upon the formula

$$d = \frac{v^2}{g}\sin\theta,$$

where g is the gravitational acceleration (usually taken to be 9.81 m/s^2 near the Earth's surface); θ is the angle at which the projectile **25** is launched; v is the velocity at which the projectile **25** is launched; and d is the total horizontal distance traveled by the projectile **25**. As such, the angle of inclination θ is dependent upon discharge velocity (characteristic of the projectile **25** as input by the selector **86**) and distance d to the target **58**.

As is known, the trajectory of projectile **25**, and therefore the angle of inclination θ required to reach the target **58**, may vary based upon other conditions (such as elevation differences between the discharge end **22** of the launch tube **16** and the target **58**, and environmental factors including wind speed/direction, temperature and humidity). Input devices, such as sensors, may be provided to supply signals indicative of these conditions to the controller **78**. In further illustrative embodiments, such condition signals may be manually input by the user through the user interface **26**. In one illustrative embodiment, the elevation sensor **83** detects the level or cant of the riffle **14** and provides a signal indicative thereof to the controller **78**, thereby accounting for elevation differences between the discharge end **22** of the launch tube **16** and the target **58** when determining the adjustment required of the launch tube **16** relative to the barrel **30**.

The process continues at block **118**, where the controller **78** sends a control signal **119** to the actuator **66**, which then activates to move the launch tube **16** about the pivot point **64** thereby changing the angle of inclination θ. At block **120**, the position sensor **82** determines the current angle of inclination θ and provides a position signal **107** to the controller **78**. Once the sensed or current angle θ equals the desired angle θ calculated by the controller **78** (block **122**), then the projectile **25** may be discharged by the user depressing the trigger **24** at block **124**. A visual or audible output may also be provided to the user to indicate that the desired angle of inclination θ has been achieved.

While this invention has been described as having an exemplary design, the present invention may be further modified within the spirit and scope of this disclosure. This application is therefore intended to cover any variations, uses, or adaptations of the invention using its general principles. Further, this application is intended to cover such departures from the present disclosure as come within known or customary practice in the art to which this invention pertains.

The invention claimed is:

1. A projectile launching apparatus comprising:

a barrel configured to discharge a first projectile;

a projectile launcher supported by the barrel and configured to discharge a second projectile;

a first and second aiming mechanism, wherein said first aiming mechanism is coupled to said projectile launching apparatus and comprises at least one aiming structure for determining a path of said first projectile, said second aiming mechanism is coupled to said projectile launching apparatus and comprises a plurality of sections comprising:

an actuator operably coupled to the barrel and the projectile launcher, the actuator configured to adjust an angle of inclination of the projectile launcher relative to the barrel;

a positioning section adapted to determine at least one position data comprising a first position data, wherein said positioning section comprises a range finder configured to generate said first position data comprising a range signal indicative of a distance to a target from said range finder;

a controller comprising a memory, an input and output portion, and a digital logic portion adapted to process machine readable instructions which are stored in said memory, wherein said machine readable instructions comprises a plurality of processing sequences comprising a first processing sequence;

an inclination sensor operably coupled to the controller and configured to generate a second position data comprising a position signal indicative of the angle of inclination of the projectile launcher to the barrel; and

an override operably coupled to the controller, the controller configured to prevent operation of the projectile launcher if the range signal indicates a distance beyond the maximum range of the projectile, absent activation of the override;

wherein said controller is operably coupled to the range finder and inclination sensor, said controller and said first processing sequence is configured to send a first control signal to the actuator in response to the range signal to adjust the angle of inclination of the projectile launcher relative to the barrel wherein said controller is adapted to selectively adjust said angle of inclination in a plurality of arc trajectories based on said range signal.

2. The apparatus of claim **1**, wherein the range finder is a laser range finder configured to transmit a laser beam to the target.

3. The apparatus of claim **1**, further comprising a projectile selector operably coupled to the controller, the selector configured to be manipulated by a user for selecting between a plurality of different types of projectiles for discharge by the projectile launcher and having different representative trajectory profiles, the angle of inclination being varied by the controller based upon the selected type of projectile, wherein said controller further selectively adjusts said actuator and said angle of inclination based on a setting of said projectile selector, said first position data comprising said range signal, and said second position data produced by said inclination sensor.

4. The apparatus of claim **1**, wherein the first projectile has a first arc trajectory profile, and the second projectile has a second arc trajectory profile, wherein said first arc trajectory is higher than said second arc trajectory as measured from a first and second reference associated with a path of said first and second projectiles.

5. The apparatus of claim **4**, wherein the high arc trajectory projectile comprises at least one of a high explosive grenade, a non-lethal round, an illuminating grenade, a smoke grenade, a CS gas grenade, and a high explosive dual purpose grenade.

6. The apparatus of claim **1**, further comprising a power supply operably coupled to the actuator.

7. The apparatus of claim **1**, wherein said positioning section further comprises a global positioning system adapted to produce a third position data comprising a point of origin location data for identifying a location of a portion of said projectile launcher, wherein said controller is further adapted to selectively adjust said actuator and said angle of inclination based on said first position data comprising said range signal, said second position data comprising said position signal, and said third position data.

8. The apparatus of claim **7**, wherein said controller selectively adjusts said actuator and said angle of inclination based on said first position data, second position data, and inclination signal.

* * * * *