Naval Surface Warfare Center

Battery Charger and Power Reduction System and Method
Patent No. US 7,573,235 B2

Mini Market Study

August 17, 2011

Prepared for:

NSWC-Crane Division

John Dement, Director of Tech Transfer
Joe Gaines, Chief Technology Officer
Evan C. Hand, Inventor

Prepared By:

Integrated Technology Transfer Network

Janeya Griffin, Consultant, ITTN Fellow

Distribution Statement A: Approved for Public Release; Distribution is Unlimited

Technology Synopsis

Battery Charger and Power Reduction System and Method

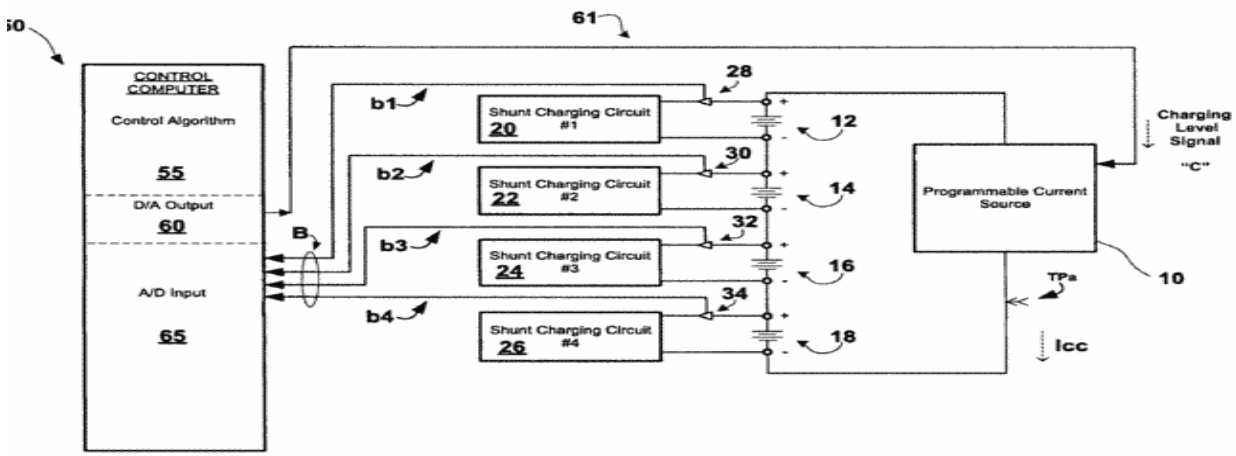

- **Shunt-type, Lithium-ion battery charging device with a power dissipation/power reduction method. The method :**
  - **Controls the amount of power being used by the battery charger by:**
    - **Monitoring the batteries level of charge during charging**
    - **Reducing the magnitude of the charging current**
    - **Ability to charge Lithium-ion batteries in series while still maintaining control of the individual cells.**
  - **Used to reduce:**
    - **Likelihood of overcharged or exploding batteries**
    - **Shortened battery life cycles**
    - **Devastating effects to the charger caused by the generation of heat.**

Distribution Statement A: Approved for Public Release; Distribution is Unlimited

Value Proposition

- **Ability to charge Lithium-ion batteries in series while still maintaining control of the individual cells**
- **Unique algorithm has the ability to automatically manage the system by:**
  - **Reducing overcharging, as well as the ability to reduce the likelihood of an exploding battery, even if the insulating layers or separators of current battery management systems fail.**
- **Current technology focuses on minimizing internal shortages and overheating, but not on the fact of the battery being overcharged**
  - **Shortening battery life**
  - **Causing damage to the battery charger from excessive heat**
- **Precise control in regards to battery modeling**
  - **The more precise the modeling equipment, the better the battery model**

Distribution Statement A: Approved for Public Release; Distribution is Unlimited

Competitive Matrix

Company Name	Product Name	Application
Electro Craft Systems	Battery Management System	protects Lithium Battery packs from over-charge and over-discharge
GS YUASA LITHIUM POWER	LEV50, Lithium ion Rechargeable Battery	Satellites – Thermal management
QUALLION	Matrix & Safe Lyte	Satellites and Electrical Vehicles
A123 SYSTEMS	Energy Core pack	*EV, HEV, PHEV
LG Chem LG Chem Power Inc.	Lithium-ion battery pack	*unique safety-reinforced separator to minimize potential thermal runaway due to an internal short
SANYO Electric Co – SANYO Panasonic ideas for life	Lithium-ion battery module (18650-type)	*heat-resistant metal oxide insulating layer between positive and negative electrodes to prevent short circuits and overheating
NAVSEA CRANE Surface Warfare Center Division	Battery Charger and Power reduction system and method	**Precise control: building Li-ion model, Unique algorithm to reduce battery overcharge and overheating**

* Electric Vehicles(EV)/Plug-In Hybrid Electric Vehicles(PHEV)/Hybrid Electric Vehicles(HEV)

Distribution Statement A: Approved for Public Release; Distribution is Unlimited

Potential Applications

Industry	Industry Segments	Application Segments
A. Global Battery	1. Lithium-ion (Industrial size)* **Market Size**: 11.8 million units (slide 12)	1. Battery management systems for Alternative energy vehicles (EV, HEV, PHEV) 2. Battery modeling
B. Military**	1. Aerospace	1. Satellites – Thermal management

*The focus is on industrial sized batteries, although the algorithm could be incorporated into a microchip, it does not make sense to use it for standard batteries having low voltages, such as for consumer products (laptops, cell phones, etc.)

**In regards to the Military industry, the satellite community has already shown interest in this technology, but it requires additional R&D and major modifications for use.

Distribution Statement A: Approved for Public Release; Distribution is Unlimited

Potential Targets for Licensing

Potential Licensees

- Panasonic – Sanyo Electric, Co Ltd.
- A123 Systems
- LG Chem Power Inc.
- Quallion LLC
- GS-Yuasa
- ElectroCraft Systems

TABLE 5 Developers of Lithium-Ion Technology Cells for HEV Applications

Company	Cathode	Anode	Packaging	Structure	Shape
Toyota	NCA	graphite	metal	spiral	prismatic
Panasonic	NMC	blend	metal	spiral	prismatic
JCS	NCA	graphite	metal	spiral	cylindrical
Hitachi	NMC/LMO	hard carbon	metal	spiral	cylindrical
NEC-Lamilin	LMO/NCA	hard carbon	pouch	stacked	prismatic
Sanyo	NMC/LMO	blend	metal	spiral	cylindrical
GS Yuasa	LMO/NCA	hard carbon	metal	spiral	prismatic
A123 Systems	LFPO	graphite	metal	spiral	cylindrical
LG Chem.	LMO	hard carbon	pouch	stacked	prismatic
Samsung	LMo/NMC	graphite	metal	spiral	cylindrical
SK Corp.	LMO	graphite	pouch	spiral	prismatic
EnerDel	LMO	LTO	pouch	spiral	prismatic
AltairNano	NMC/LCO	LTO	pouch	stacked	prismatic

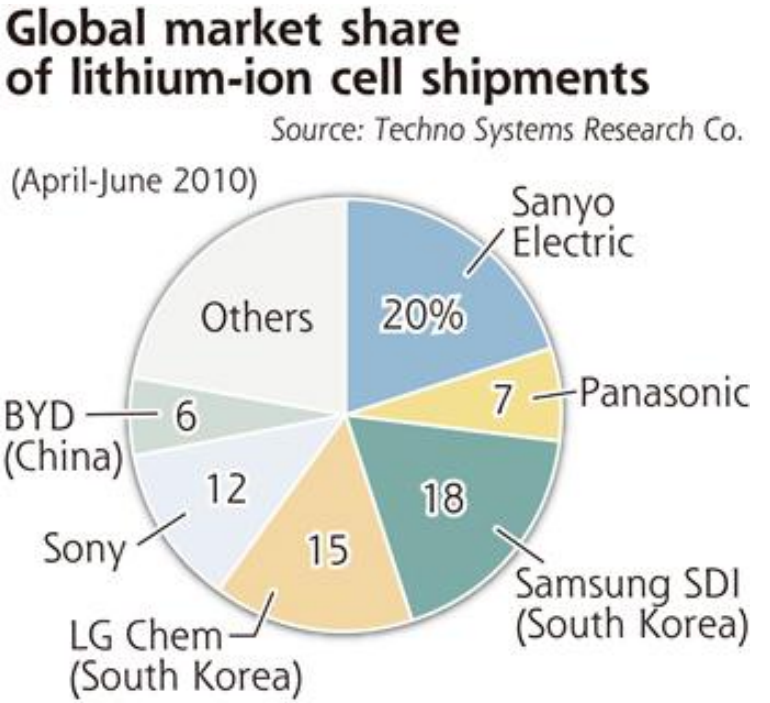

Distribution Statement A: Approved for Public Release; Distribution is Unlimited

Industry Insights

- "We would be interested in using the technology for battery management on space applications for the manufacturing of space batteries. Focusing on the Mechanical and thermal aspect. If the technology can provide reliability and lower manufacturing costs, that is what we would be most interested in"
- Curtis Aldrich: Sales and marketing manager Phone: 1.888.479.8272 Email: Curtis.aldrich@gsyuasa-lp.com

---

- Shima Hatami: Sanyo Technology Center Phone: 406.861.8424

- Dr. Bart Riley Founder/VP R&D/CTO Phone: 617.778.5700 ext: 111704

- Dr. Mohamed Alamgir: Research Director Phone: 248.307.1800 ext: 102 Email: Alamgir@lgpci.com

---

Distribution Statement A: Approved for Public Release; Distribution is Unlimited

Recommendations

- **Get feedback from the head of R&D to understand what elements a performance test should include in order for them to evaluate the technology**
  - Conduct additional performance tests against competitors technology to quantify competitive advantage
  - Get new testing results from Jason Leonard: recently began testing against comparable technologies. Use results when presenting to interested parties
- **Contact manufacturers of battery management systems having a special focus on alternative energy vehicles (ie: LG Chem, A123 systems, Panasonic Group – Sanyo Electric Co. Ltd., etc.) (refer to industry insight slide)**
  - Leverage their opportunities and goals to advance lithium-ion technologies
- **Contact Curtis Aldrich of GS-Yuasa Lithium power to integrate the technology into their product line for use with Lithium-ion batteries in satellites. (refer to industry insight slide)**
  - Focus on leveraging the technology's opportunity to lower manufacturing costs and its reliability
- **Attend the advanced automotive battery conference as an exhibitor to bring awareness to the technology.**
  - *February 6 - 10, 2012 Omni Orlando Resort at ChampionsGate*. Email to sign-up: Exhibitor-sponsors@advancedautobat.com
- **Attend National Alliance for Advanced Technology Batteries annual meeting/conference**
  - **NAATBATT 2011: September 7-8, 2011 - Louisville, Kentucky:** James Greenberger Email: jgreenberger@naatbatt.org or (312) 588-0477
  - http://events.r20.constantcontact.com/register/event?oeidk=a07e3yxwr9k4d31bff3&llr=5kjlyfdab

Distribution Statement A: Approved for Public Release; Distribution is Unlimited

Naval Surface Warfare Center

Battery Charger and Power Reduction System and Method
Patent No. US 7,573,235 B2

For further discussions, contact:
NSWC-Crane Division

Director of Tech Transfer: John Dement
Chief Technology Officer: Joe Gaines
Inventor: Evan Hand

By Email: John.dement@navy.mil

Distribution Statement A: Approved for Public Release; Distribution is Unlimited

Status To Date

Status	Required Tasks
Completed	Draft interview agenda/questions. Obtain mentor approval prior to interviews.
Completed	Perform in person interview with inventor(s) and/or subject matter experts (SME) in accordance with a provided checklist
Completed	Develop a short succinct (1-2 paragraphs) common language description
Completed	Perform a web search for similar / competing products.
Completed	Identify potential markets for the technology including an abbreviated horizontal and vertical analysis and potential company lists.
Awaiting Responses and feedback	For the top 2-3 markets, contact potential companies to determine interest, issues, etc.

Distribution Statement A: Approved for Public Release; Distribution is Unlimited

Situational Summary

- Inventor Evan C. Hand of the NAVSEA Crane Lab invented the Battery Charger and Power Reduction system and method because:
  - There was a requirement from major sponsors to charge lithium ion batteries in series, but be able to control the individual cells as well.
- The technology has been deployed within the battery testing lab at Crane
- Applications for the device are in the commercial and military fields
- Both primary and secondary research indicate market potential

Distribution Statement A: Approved for Public Release; Distribution is Unlimited

Market Study Goals

1. Conduct an abbreviated study assessment to:
   a. Define technology in common language for priority commercial and military application
   b. Create collateral material for industry outreach
   c. Validate collateral material communication through:
      - Primary research to validate potential market interest
      - Secondary research to validate market size

Distribution Statement A: Approved for Public Release; Distribution is Unlimited

Market Opportunity

- According to JP Morgan, the global EV market will expand from 740,000 units this year to around 12.9 million units by 2020.

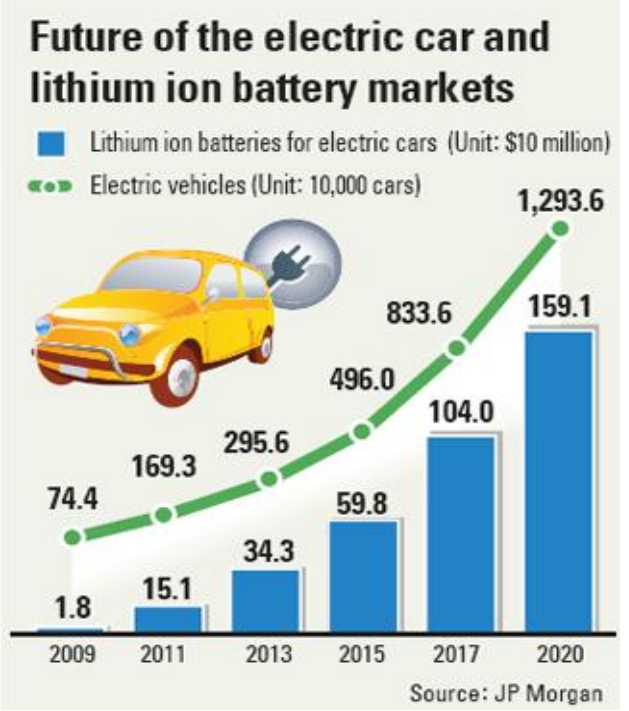

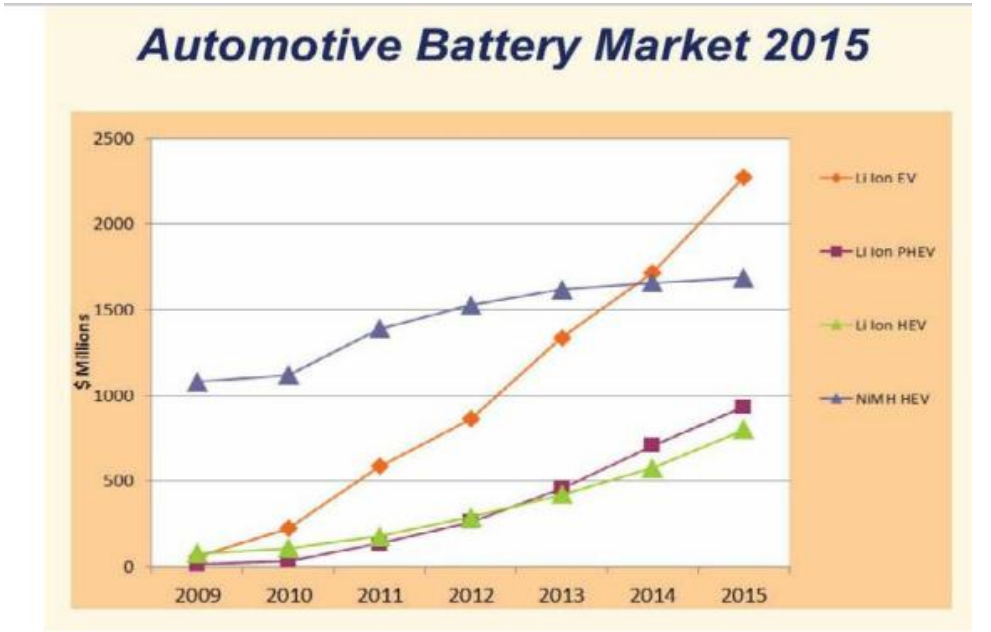

- Global battery chargers market, which is said to exceed US $11.9 Billion by 2015

- Up to now, the lithium ion battery market has been predominantly consumer (90% as of today) but new, diversified applications including alternative energy vehicles and ESS (Electrical Storage Systems), are expected to provide the new growth engines.

Source: 1. http://www.renewableenergyworld.com/rea/partner/amadeecompany/news/article/2011/02/global-lithium-ion-batteries-market-to-reach-43-billion-by-2020
2. http://www.electronics.ca/presscenter/articles/1325/1/Global-Battery-Chargers-Market-to-Exceed-US119-Billion-by-2015/Page1.html

Distribution Statement A: Approved for Public Release; Distribution is Unlimited

Company Name	Product Name	Validation
ElectroCraft Systems	Battery Management System	- Design-Manufacture innovative Chargers, Controllers and Instruments to help advance the Electric Transportation and Sustainable Energy fields towards a better world to live in
Gs-Yuasa Lithium Power	LEV50, Lithium ion Rechargeable Battery	- **creates complete battery systems for North American clients within the Military, Aviation, Space, HEV, EV, and Undersea industries** - Currently they are in the process of expanding their advanced prototyping and test capability for battery and charger products
Quallion LLC	Matrix & Safe Lyte	- Quallion's CEO and CTO, Dr. Tsukamoto, has been researching lithium ion batteries for over 30 years and is acknowledged worldwide as one of the leading experts on lithium ion battery technology
A123 systems	Energy Core pack	- develops and manufactures advanced lithium-ion batteries and energy storage systems - **Last year, A123 Systems got a $249 million federal grant to open at least three lithium-ion-battery plants in Michigan**
LG Chem Power Inc.	Lithium-ion battery pack	- Accumulated expertise in the development of safe, high-power/high-energy, compact, and lightweight lithium-ion battery systems - **poised to become one of the world's principal battery manufacturers for the HEV, PHEV, and EV industries**
SANYO Electric Co – Panasonic Corp	Lithium-ion battery module (18650-type)	- Panasonic recently took a majority stake in Sanyo, the world's biggest lithium-ion battery manufacturer - **Tesla Motors' announced that the electric Giant Panasonic will be the automaker's sole supplier of electric vehicle battery packs**

Distribution Statement A: Approved for Public Release; Distribution is Unlimited