US007811092B2

(12) **United States Patent**
Brown et al.

(10) **Patent No.: US 7,811,092 B2**
(45) **Date of Patent: Oct. 12, 2010**

(54) **ROTARY ELECTRICAL CONTACT DEVICE**

(75) Inventors: **Christopher Allen Brown**, Bloomington, IN (US); **John Felix Schneider**, Huntingburg, IN (US)

(73) Assignee: **The United States of America as represented by the Secretary of the Navy**, Washington, DC (US)

(*) Notice: Subject to any disclaimer, the term of this patent is extended or adjusted under 35 U.S.C. 154(b) by 0 days.

(21) Appl. No.: **12/546,068**

(22) Filed: **Aug. 24, 2009**

(65) **Prior Publication Data**

US 2010/0151700 A1 Jun. 17, 2010

Related U.S. Application Data

(62) Division of application No. 12/334,070, filed on Dec. 12, 2008, now Pat. No. 7,635,266.

(51) **Int. Cl.**
H05G 1/60 (2006.01)

(52) **U.S. Cl.** **439/25**; 439/24; 378/15

(58) **Field of Classification Search** 439/25, 439/24; 378/15

See application file for complete search history.

(56) **References Cited**

U.S. PATENT DOCUMENTS

2,820,207	A	1/1958	Roy et al.	
2,854,647	A	9/1958	Nugent	
3,517,369	A	6/1970	Buschbom	
4,098,526	A	7/1978	DuBois	
4,209,214	A	6/1980	Martinez	
4,798,540	A	1/1989	Bernardi	
4,850,881	A	7/1989	Lagier et al.	
5,470,236	A	11/1995	Wissler	
6,068,490	A	5/2000	Salzberg	
7,037,126	B2	5/2006	Tsutsumi et al.	
7,497,689	B2	3/2009	Sommer	
2007/0029801	A1 *	2/2007	Caiozza	290/44
2008/0238106	A1 *	10/2008	Lanie	290/55

* cited by examiner

Primary Examiner—Gary F. Paumen
(74) *Attorney, Agent, or Firm*—Christopher A. Monsey

(57) **ABSTRACT**

A rotary electrical contact device includes a stationary member configured to be coupled to a base, and a rotatable member supported for rotation relative to the stationary member and defining a center opening. A raceway includes a plurality of axially spaced annular contact rings supported by one of the stationary member and the rotatable member. A blade tower includes a plurality of axially spaced blade assemblies and is supported by the other of the rotatable member and the stationary member. Each blade assembly includes a radially extending contact blade in electrical communication with one of the axial spaced contact rings of the raceway.

5 Claims, 8 Drawing Sheets

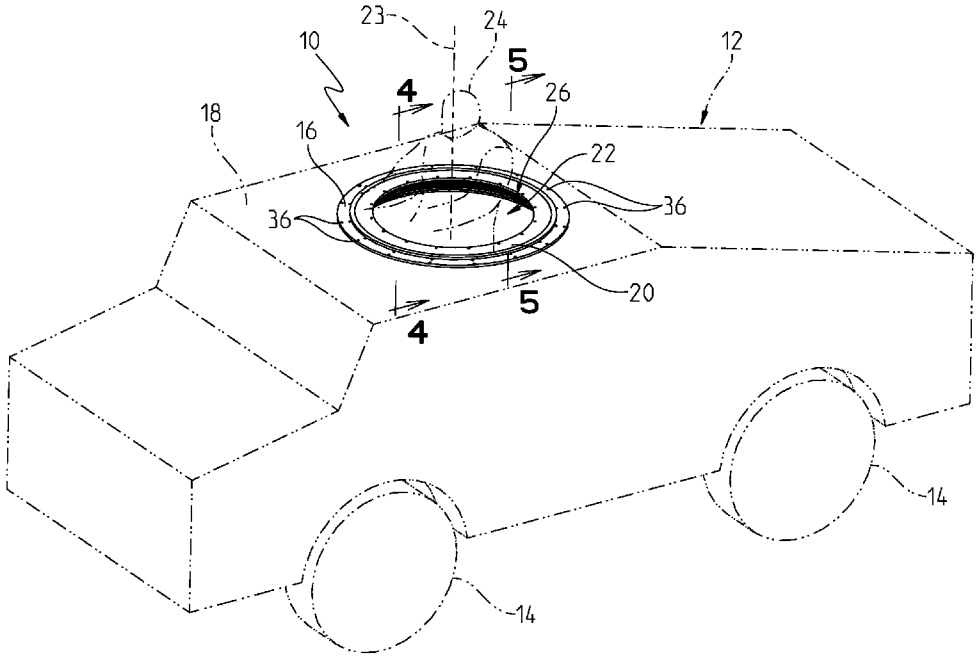

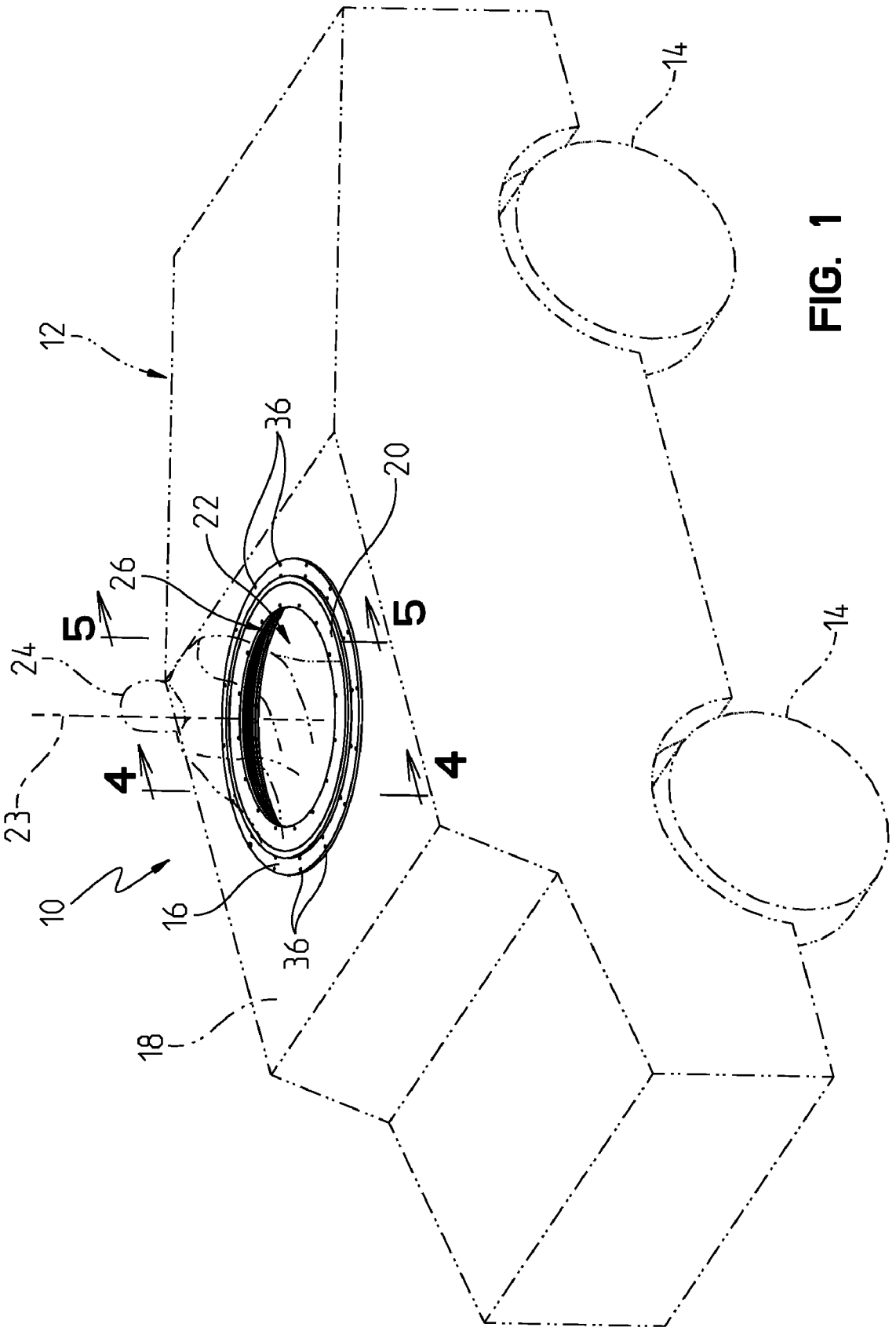

FIG. 1

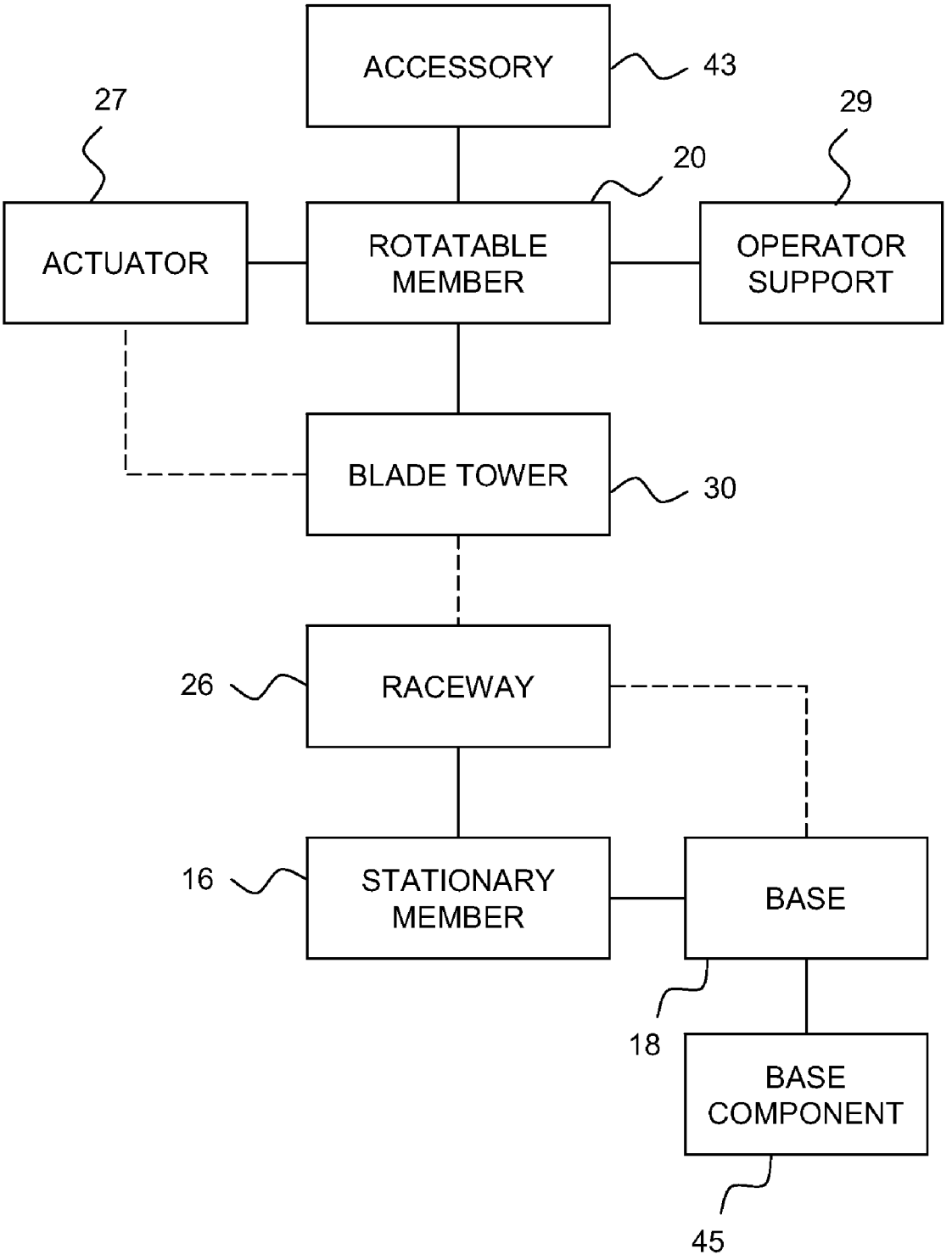
ACCESSORY
43
27
29
20
ACTUATOR
ROTATABLE MEMBER
OPERATOR SUPPORT
BLADE TOWER
30
26
RACEWAY
16
STATIONARY MEMBER
BASE
18
BASE COMPONENT
45

FIG. 2

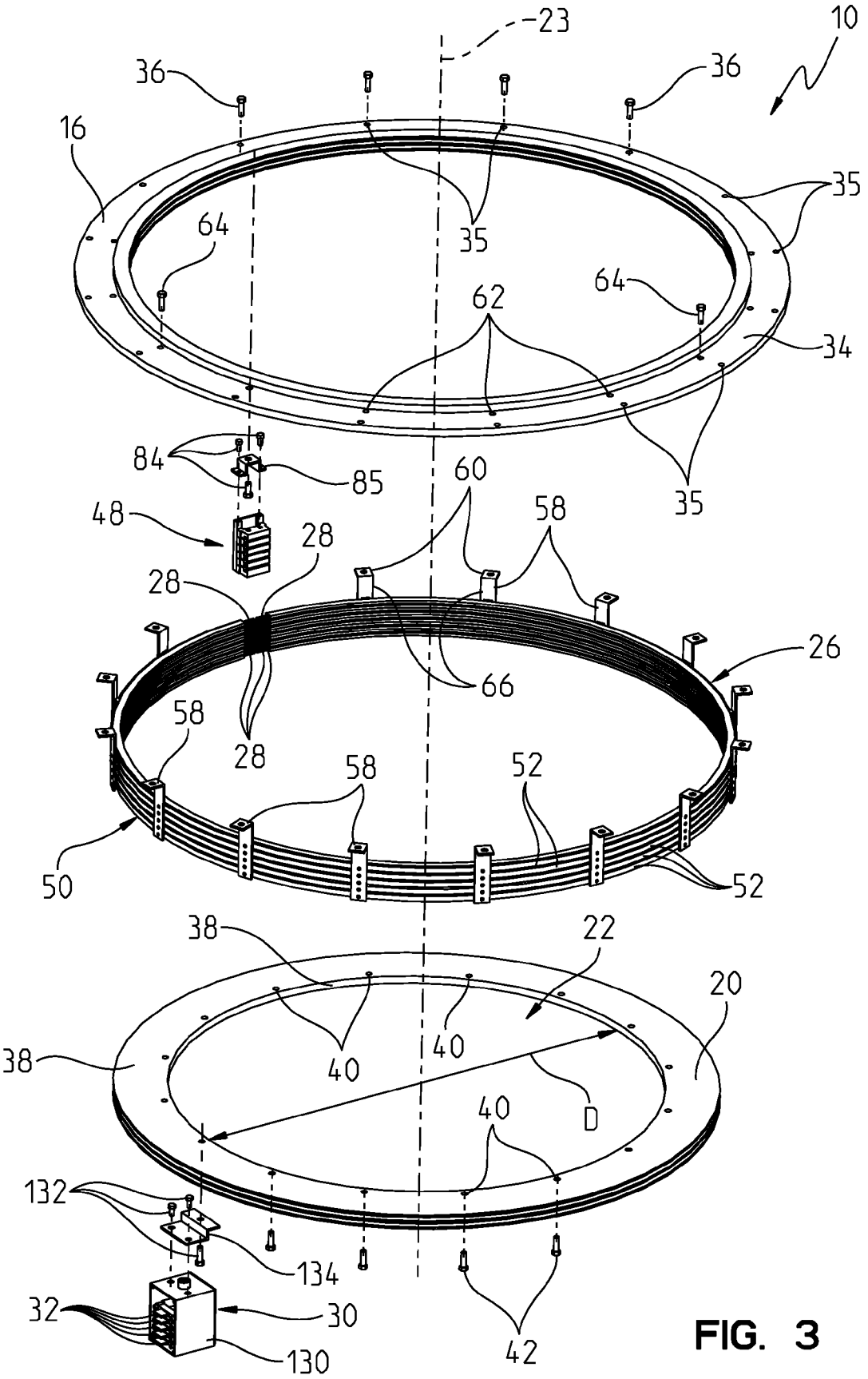
23
10
36
36
16
35
35
64
64
62
34
35
84
85
60
48
58
28
28
26
66
58
28
58
52
50
52
38
22
20
38
40
40
D
40
132
134
32
30
130
42

FIG. 3

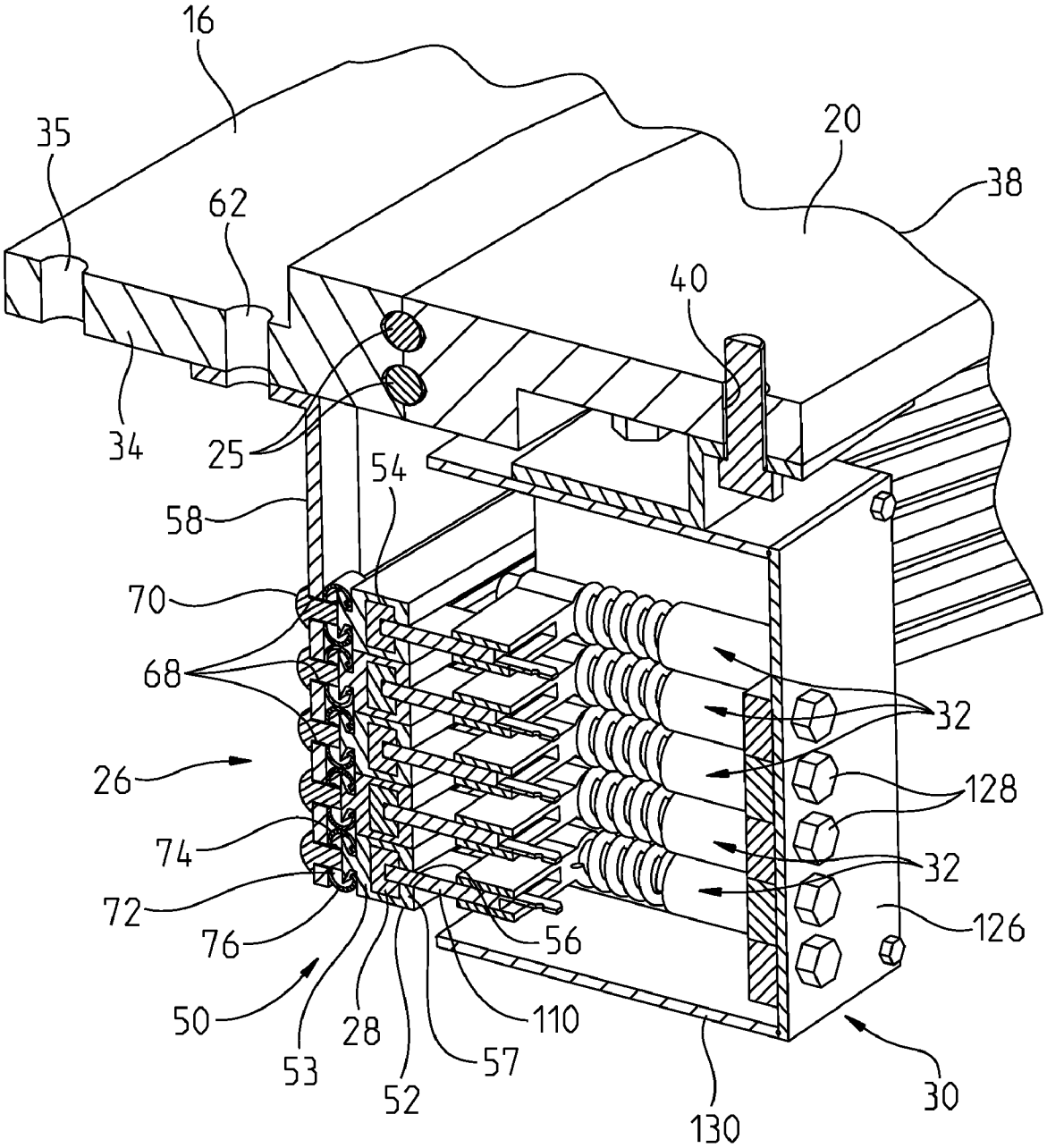
16
35
62
20
38
40
34
25
54
58
70
68
26
74
72
76
50
53
28
52
57
110
56
32
128
32
126
130
30

FIG. 4

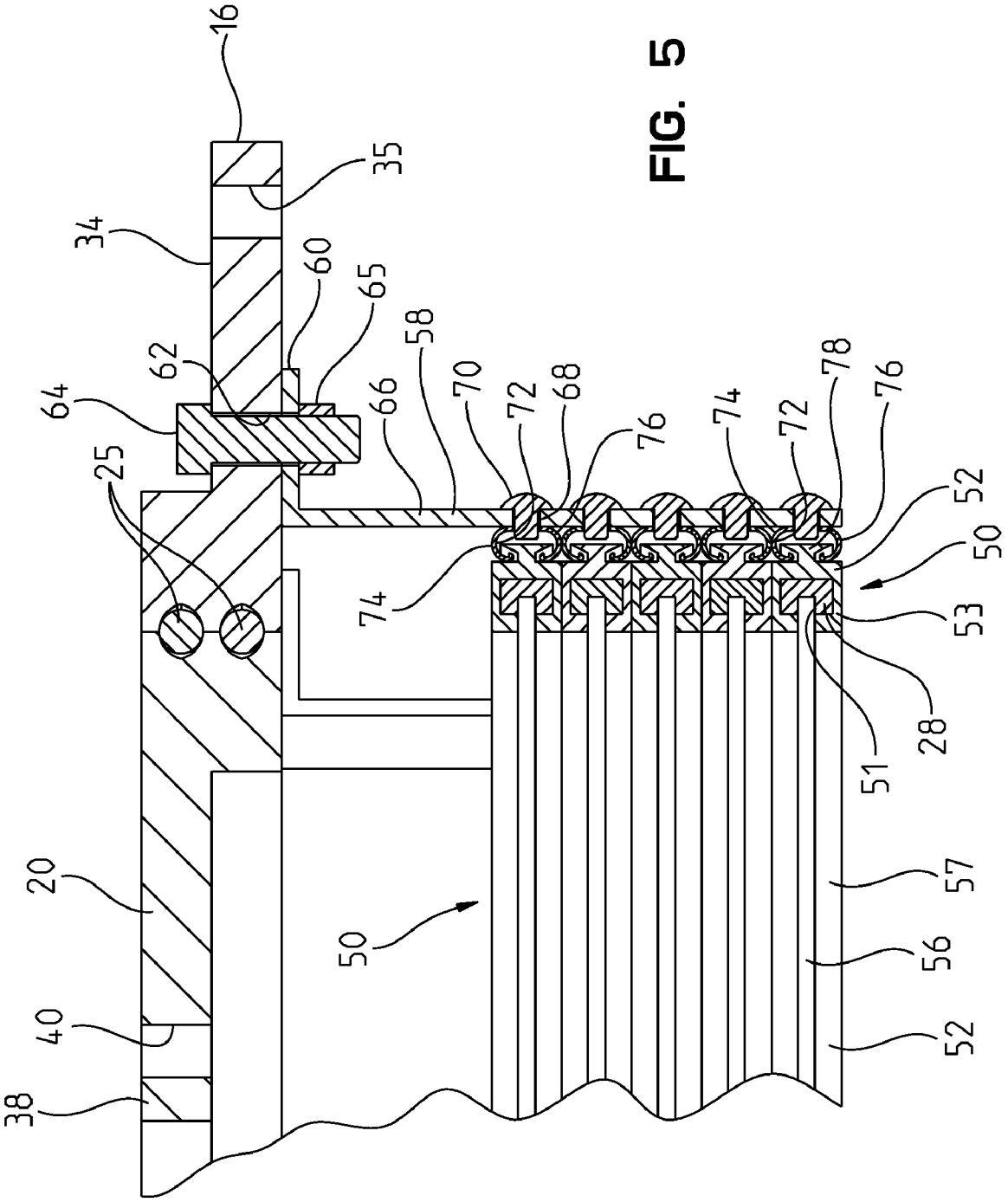
16
35
34
60
65
58
62
64
66
70
72
68
76
74
72
78
76
25
52
50
74
53
28
51
20
57
50
56
40
52
38

FIG. 5

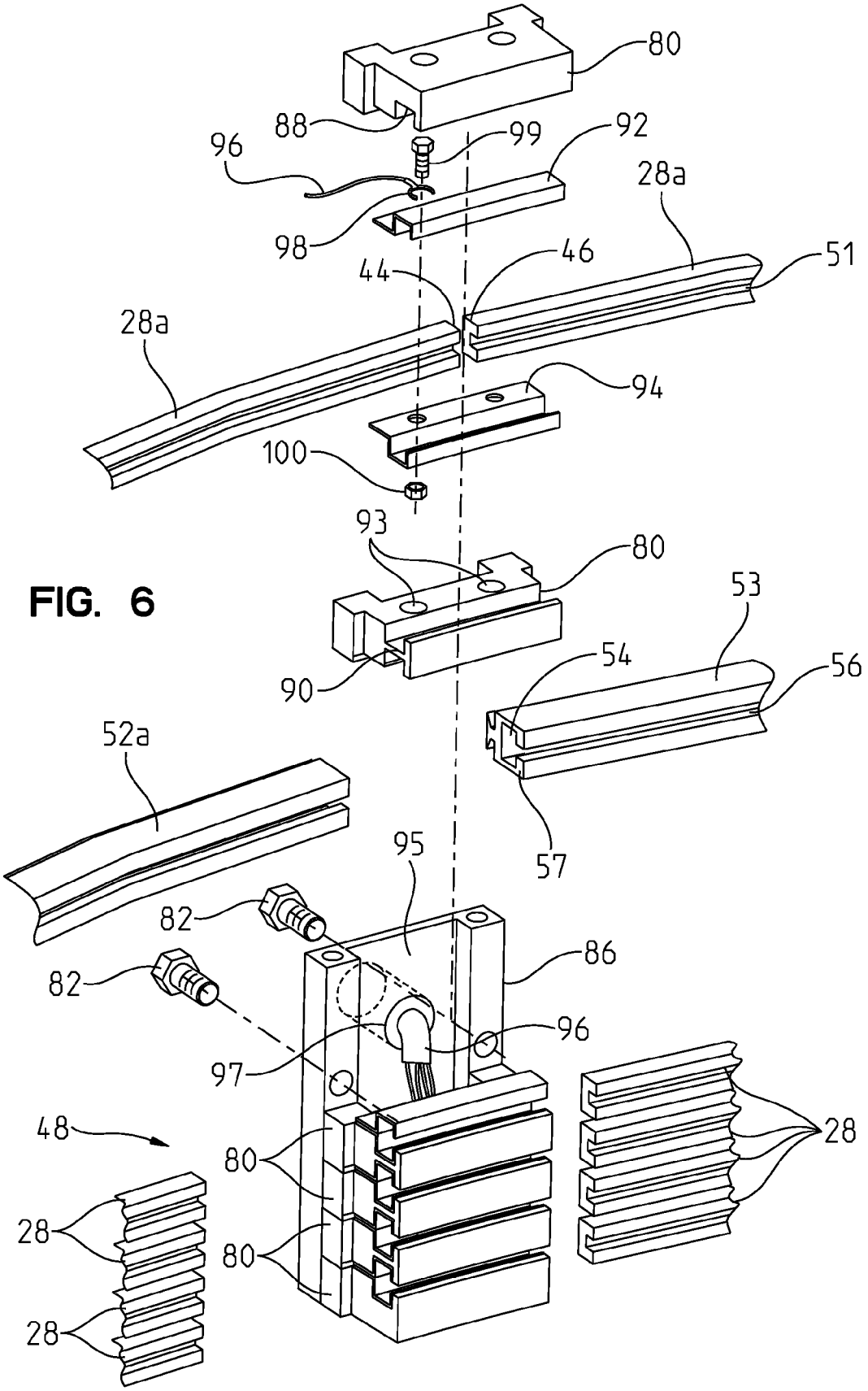
80
88
99
92
96
28a
98
46
51
44
28a
94
100
93
80
53
90
54
56
52a
57
95
82
86
82
96
97
48
80
28
28
80
28

FIG. 6

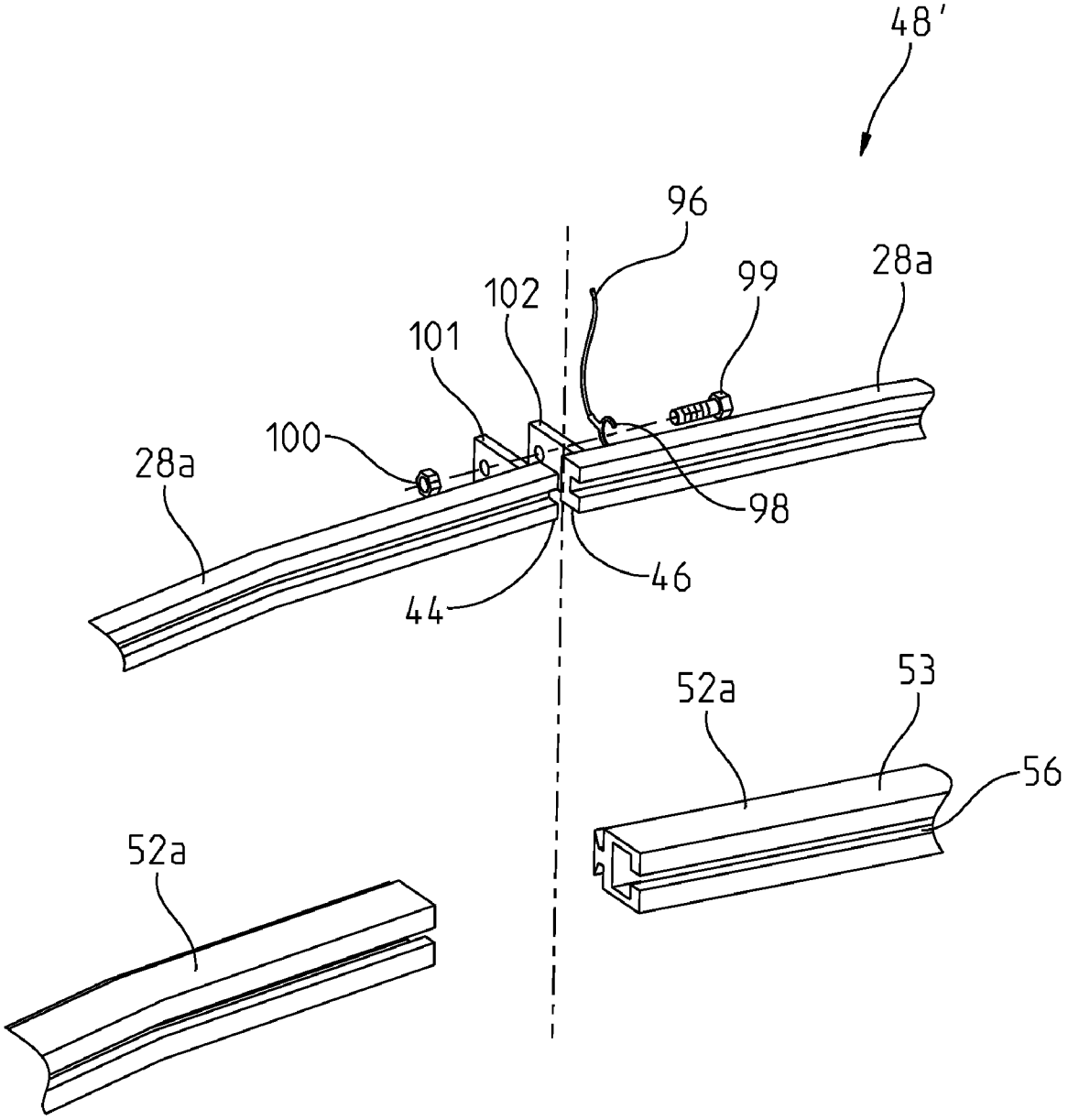

FIG. 7

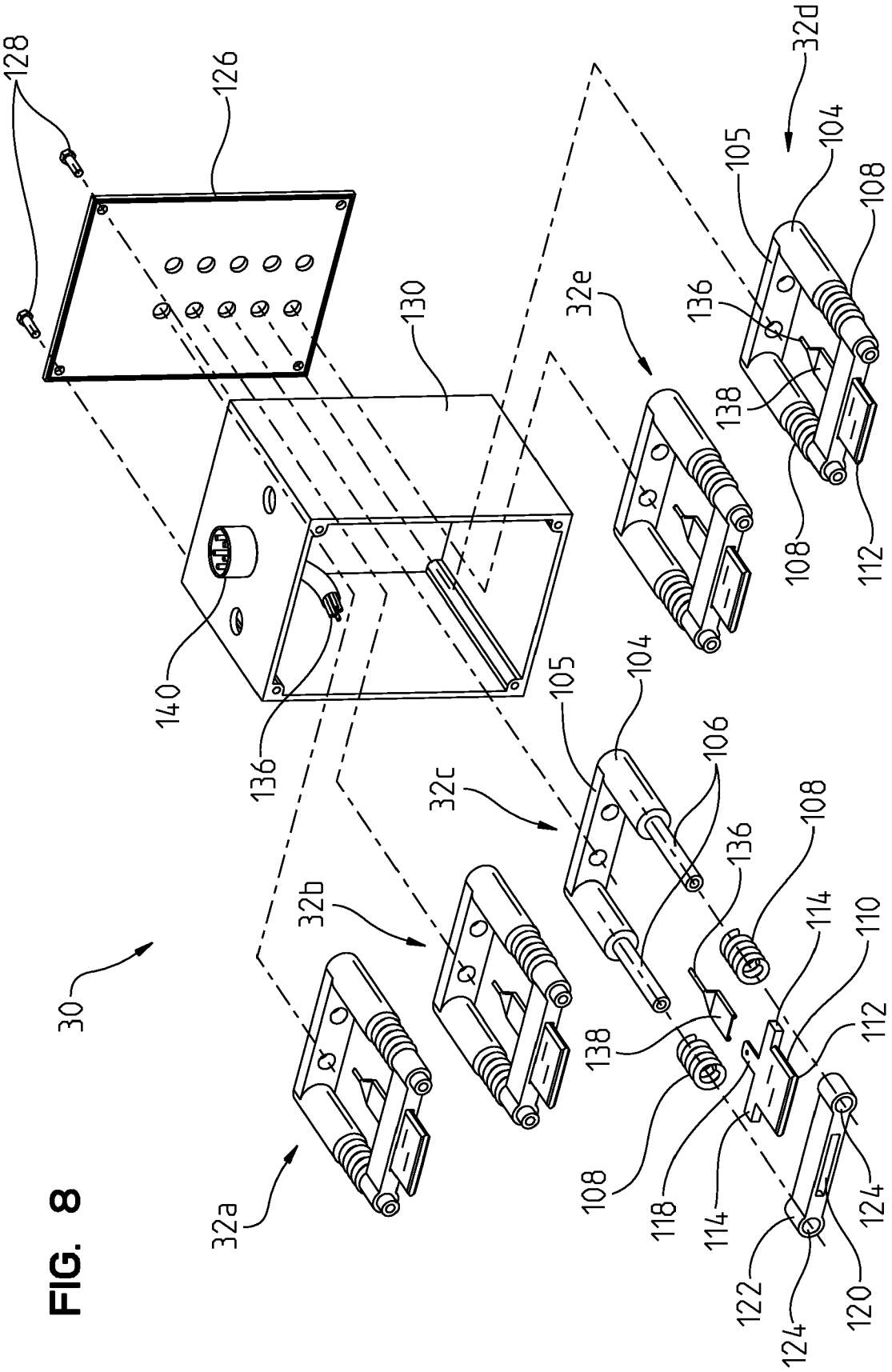
128
126
130
140
136
30
32a
32b
32c
32d
32e
104
105
106
108
110
112
114
118
120
122
124
138

FIG. 8

ROTARY ELECTRICAL CONTACT DEVICE

This application is a divisional of U.S. patent application Ser. No. 12/334,070, filed Dec. 12, 2008 now U.S. Pat. No. 7,635,266, the disclosures of which are expressly incorporated by reference herein.

STATEMENT REGARDING FEDERALLY SPONSORED RESEARCH OR DEVELOPMENT

The invention described herein was made in the performance of official duties by employees of the Department of the Navy and may be manufactured, used, licensed by or for the United States Government for any governmental purpose without payment of any royalties thereon.

BACKGROUND OF THE INVENTION

The present invention relates generally to electrical contact devices and, more particularly, to rotary electrical contact devices for providing electrical communication between components that rotate relative to each other.

Conventional couplings are known to rotatably couple a stationary member and a rotating member, wherein the rotating member is configured to receive the torso of an individual. The stationary member may be coupled to a vehicle and the rotating member may support a variety of components or accessories, such as a turret, a crane, an antenna, a camera, or a ladder. Electrical communication is often required between the stationary member and the rotating member, for example, to provide communication signals to the operator through a port on the rotating member, or to provide power to the respective accessory supported by the rotating member. Traditional cables between the stationary member and the rotating member for providing electrical communication therebetween are typically cumbersome and may become entangled during rotation. While traditional slip rings may provide electrical communication between the stationary member and the rotating member, they are not designed to provide adequate clearance through the center thereof for the torso of an individual and/or associated equipment.

SUMMARY OF THE INVENTION

According to an illustrative embodiment of the present disclosure, a rotary electrical contact device includes a stationary member configured to be coupled to a base, and a rotatable member supported for rotation relative to the stationary member. The rotatable member defines a center opening configured to permit the traversing of an individual therethrough. A raceway includes a plurality of axially spaced annular contact rings supported by one of the stationary member and the rotatable member. A blade tower includes a plurality of axially spaced blade assemblies and is supported by the other of the rotatable member and the stationary member. Each blade assembly includes a radially extending contact blade in electrical communication with one of the axial spaced annular contact rings of the raceway.

According to a further illustrative embodiment of the present disclosure, a rotary electrical contact device includes an outer stationary member, and an inner rotatable member supported for rotation relative to the stationary member, the inner rotatable member defining a center opening. A raceway includes a plurality of axially spaced annular contact rings supported by one of the outer stationary member and the inner rotatable member. A blade tower includes a plurality of axially spaced blade assemblies and is supported by the other of the inner rotatable member and the outer stationary member. Each blade assembly includes a contact blade and a spring to radially bias the contact blade into electrical communication with one of the axially spaced annular contact rings of the raceway.

According to another illustrative embodiment of the present disclosure, a rotary electrical contact device for use with a vehicle includes an outer stationary member configured to be coupled to a vehicle platform, and a raceway. The raceway includes opposing ends, a plurality of axial spaced contact rings, a plurality of annular insulators receiving the plurality of contact rings, and a plurality of circumferentially spaced mounting brackets coupling the annular insulators to the outer stationary member. An inner rotatable member is supported for at least 360 degree rotation relative to the stationary member. The inner rotatable member defines a center opening having a diameter of at least 26 inches to permit the traversing of an individual therethrough. A blade tower includes a plurality of axially spaced blade assemblies and is supported by the inner rotatable member, each blade assembly including a contact blade and a spring to radially outwardly bias the contact blade into electrical communication with one of the axially spaced contact rings of the raceway. A connector joins together opposing ends of the raceway to form a cylindrical structure.

According to yet another illustrative embodiment of the present disclosure, a method of providing electrical communication includes the steps of providing a stationary member, and providing a rotatable member for rotation relative to the stationary member, the rotatable member defining a center opening. The method further includes the steps of coupling a raceway to one of the stationary member and the rotatable member, the raceway including a plurality of axially spaced annular contact rings. The method also includes the steps of coupling a blade tower to the other of the rotatable member and the stationary member, the blade tower including a plurality of axially spaced blade assemblies, each blade assembly including a radially extending contact blade in electrical communication with one of the axially spaced contact rings of the raceway. The method also includes the steps of traversing an individual within the center opening of the rotatable member, and rotating the rotatable member relative to the stationary member, wherein the contact blades of the blade assemblies remain in electrical communication with the contact rings of the raceway.

BRIEF DESCRIPTION OF THE DRAWINGS

The foregoing aspects and many of the attendant advantages of this invention will become more readily appreciated as the same become better understood by reference to the following detailed description when taken in conjunction with the accompanying drawings.

FIG. **1** is a perspective view of an illustrative rotary electrical contact device coupled to a vehicle;

FIG. **2** is a diagrammatic representation of the illustrative rotary electrical contact device of FIG. **1** operably coupling an accessory to a base;

FIG. **3** is an exploded perspective view of the illustrative rotary electrical contact device of FIG. **1**;

FIG. **4** is a cross-sectional view of the illustrative rotary electrical contact device taken along line **4-4** of FIG. **1**;

FIG. **5** is a cross-sectional view of the illustrative rotary electrical contact device taken along line **5-5** of FIG. **1**;

FIG. **6** is a partially exploded perspective view of the illustrative connector of FIG. **1**;

FIG. **7** is an exploded perspective view of a further illustrative connector; and

FIG. **8** is a partially exploded perspective view of the illustrative blade tower of FIG. **1**.

Corresponding reference characters indicate corresponding parts throughout the several views. Although the drawings represent embodiments of various features and components according to the present disclosure, the drawings are not necessarily to scale and certain features may be exaggerated in order to better illustrate and explain the present disclosure. The exemplification set out herein illustrates embodiments of the invention, and such exemplifications are not to be construed as limiting the scope of the invention in any manner.

DETAILED DESCRIPTION OF THE DRAWINGS

For the purposes of promoting an understanding of the principles of the invention, reference will now be made to the embodiments illustrated in the drawings, which are described below. The embodiments disclosed below are not intended to be exhaustive or limit the invention to the precise form disclosed in the following detailed description. Rather, the embodiments are chosen and described so that others skilled in the art may utilize their teachings. It will be understood that no limitation of the scope of the invention is thereby intended. The invention includes any alterations and further modifications in the illustrated devices and described methods and further applications of the principles of the invention which would normally occur to one skilled in the art to which the invention relates.

Referring initially to FIG. **1**, an illustrative embodiment rotary electrical contact device **10** is shown coupled to a vehicle **12**. While the following description describes the rotary electrical contact device **10** for use in connection with a vehicle **12** including a plurality of wheels **14**, it should be appreciated that the device **10** may find use in other applications, including being mounted to a stationary support (not shown). Further, the illustrative vehicle **12** in the embodiment of FIG. **1** may be of any conventional type, such as military vehicles, law enforcement vehicles, rescue trucks, communications vehicles, and construction equipment.

With reference to FIGS. **1-3**, the rotary electrical contact device **10** illustratively includes an annular outer stationary member **16** configured to be coupled to a base **18**, illustratively a vehicle platform. An annular inner rotatable member **20** is illustratively supported for rotation relative to the stationary member **16** and is concentrically received within the outer stationary member **16**. The inner rotatable member **20** defines a center opening **22** having a longitudinal axis **23** and configured to receive the torso of an individual **24**, typically an operator associated with the vehicle **12**. More particularly, the center opening **22** of the rotatable member **20** is configured to permit the traversing thereof by the torso of individual **24** (i.e., ingress and egress within the center opening **22**). Illustratively, the center opening **22** has an inner diameter D of at least 26 inches based upon the shoulder width of an average adult male. In one illustrative embodiment, the inner diameter D of center opening **22** is approximately 42 inches in order to accommodate the clothing of individual **24** and to permit the manipulation of equipment within opening **22** by individual **24**.

Conventional bearings, such as ball bearings **25**, are illustratively supported intermediate the stationary member **16** and the rotatable member **20** (FIGS. **4** and **5**). With reference to FIG. **2**, an actuator **27**, such as an electric motor and gear train, may be coupled in a conventional manner to the rotatable member **20** to drive the rotatable member **20** in rotation relative to the stationary member **16**. Alternatively, the rotatable member **20** may be manually rotated by the individual **24** received within the center opening **22**. In certain illustrative embodiments, an operator support **29** (FIG. **2**), such as a stand or seat, may be supported by the rotatable member **20**, such that the individual **24** rotates concurrently with the rotatable member **20**.

Referring again to FIGS. **2** and **3**, a raceway **26** is illustratively supported by the stationary member **16** and includes a plurality of axially spaced annular contact rings **28**. A blade tower **30** is illustratively supported by the rotatable member **20** and includes a plurality of axially spaced blade assemblies **32**. As further detailed herein, the blade assemblies **32** of the blade tower **30** cooperate with the contact rings **28** of the raceway **26** to provide continuous electrical communication therebetween regardless of the rotational position of the rotatable member **20** relative to the stationary member **16**.

With reference to FIGS. **3-5**, the stationary member **16** includes an annular outer mounting flange **34** having a plurality of mounting holes **35** for receiving fasteners **36** for coupling to the vehicle platform or base **18** (FIG. **1**). Similarly, the rotatable member **20** includes an annular inner mounting flange **38** having a plurality of mounting holes **40** for receiving fasteners **42** for securing thereto an accessory **43** (FIG. **2**), such as a turret in connection with a military vehicle, an antennae or a camera in connection with a communications vehicle, a crane in connection with construction equipment, or a ladder in connection with a rescue or maintenance truck (not shown). An electrical base component **45**, such as a power supply, controller, communication unit, etc., may be supported by the base **18** and is in electrical communication with the accessory **43** through the rotary electrical contact device **10**.

Referring to FIGS. **3** and **6**, the contact rings **28** of the raceway **26** include opposing ends **44** and **46** which are coupled together through a connector **48**. The plurality of annular contact rings **28** are supported by an insulator assembly **50**. Each annular contact ring **28** is illustratively formed of an electrically conductive material, such as copper, formed into an annular configuration. Each contact ring **28** illustratively includes a radially outwardly disposed guide slot **51** for cooperating with an associated blade assembly **32**.

With reference FIGS. **4-6**, the insulator assembly **50** includes a plurality of axially aligned annular insulators **52**, each formed of an electrically insulating material, such as a thermoplastic or elastomer. Each annular insulator **52** includes a body **53** defining a chamber **54** for receiving one of the contact rings **28**. A slot **56** is formed in a radially inner wall **57** of the insulator body **53** and is in communication with each chamber **54**. Each slot **56** is configured to cooperate with an associated blade assembly **32** and is aligned with guide slot **51** of a respective contact ring **28**. While the illustrative embodiment shows five contact rings **28** and insulators **52**, any number of contact rings **28** and insulators **52** may be utilized in connection with the rotary electrical contact device **10** depending upon the desired application. For instance, in one illustrative embodiment a total of eight contact rings **28** and associated insulators **52** are utilized, with three of the contact rings **28** being dedicated for electrical power transfer and five of the contact rings **28** being dedicated for communication functions (including the transmission of audio and video signals).

With reference to FIGS. **3-5**, a plurality of circumferentially spaced mounting brackets **58** are supported by the stationary member **16** and extend downwardly from the outer mounting flange **34**. The mounting brackets **58** are substantially L-shaped and include radially extending bases **60**

mounted to openings **62** in the outer mounting flange **34** by fasteners, such as bolts **64** and cooperating nuts **65** (FIG. **5**). An axially extending leg **66** is coupled to each base **60** and includes a plurality of openings **68** for receiving fasteners **70** to secure a plurality of mounting clips **72** thereto. The clips **72** are substantially U-shaped and include opposing arms **74** and **76** which couple to the insulators **52**. More particularly, each insulator **52** includes a T-shaped mounting tab **78** which is snap fit into the arms **74** and **76** of the clip **72**. Each clip **72** is illustratively formed of a resilient material such that the arms **74** and **76** are biased into engagement with the mounting tab **78** of the insulator **52**. In one illustrative embodiment, the clips **72** are formed of spring steel.

With reference to the illustrative embodiment of FIG. **6**, the connector **48** may include a plurality of axially aligned clamp or securing members **80** which are coupled through fasteners **82** to a support bracket **86**. The support bracket **86** is secured to the outer mounting flange **34** of the stationary member **16** through conventional fasteners **84** and mounting bracket **85** (FIG. **3**). The opposing ends **44** and **46** of the contact rings **28** are coupled together by the clamp members **80** of the connector **48**. More particularly, the clamp members **80** cooperate to define opposing securing surfaces **88** and **90** to secure the opposing ends **44** and **46** of the contact rings **28** therebetween. Connector contacts **92** and **94** are illustratively positioned between the opposing securing surfaces **88** and **90** and are in electrical communication with the ends **44** and **46** of the respective contact ring **28**.

Electrical wires **96** may be coupled to the contacts **92** and **94** and pass through a channel **95** formed in the support bracket **86**. The wires **96** may be coupled to a conventional multi-pin connector **97**, thereby providing communication between the contact rings **28** and the component **45** supported by the base **18**. The wires **96** may be coupled to the contacts **92** and **94** in a variety of manners, for example through soldering or through a contact clip or tab **98**. The contact clip **98** may be a C-clip coupled to wire **96** and secured to the contact **92** through a fastener, such as a bolt **99** and nut **100**. Openings **93** within the clamp members **80** may receive the head of bolts **99** and the nuts **100**.

In an alternative embodiment of FIG. **7**, the connector **48'** includes opposing tabs **101** and **102** coupled to ends **44** and **46** of each annular contact ring **28**. A fastener, illustratively bolt **99** and nut **100**, couple together the opposing ends **44** and **46**, while contact clip **98** provides electrical communication with wire **96**.

With reference to FIG. **8**, the illustrative blade tower **30** includes the plurality of axially spaced blade assemblies **32**. Each blade assembly **32** includes a base **104** having a mounting portion **105** and a pair of guide members or posts **106**. The posts **106** slidably receive a pair of springs **108** configured to engage and bias radially outwardly a contact blade **110**. The contact blade **110** is formed of a flexible electrically conductive material, such as copper. The blade **110** includes an outer contact member **112**, a pair of arms **114**, and a coupling tab **118**. The outer end of the contact member **112** is configured to contact and provide electrical communication with one of the contact rings **28**. The arms **114** cooperate with the springs **108** to bias the contact member **112** radially outwardly. The radial biasing of the contact members **112** accommodate dimensional tolerances given the relatively large diameter of the raceway **26** by ensuring electrical contact between the blade assemblies **32** and the annular contact rings **28**.

The contact member **112** is received within a slot **120** formed within a holder **122** to secure the contact blade **110** within the blade assembly **32**. The outer end of each contact member **112** passes through the slot **56** of the insulator **52** and is received within the guide slot **51** of the contact ring **28** to provide electrical contact therebetween. Receiving bores **124** in the holder **122** receive the posts **106** and the holder **122** is secured in position by conventional means, such as a fastener, staking, or adhesive.

The base **104** of each blade assembly **32** is coupled to a backing plate **126** through conventional fasteners **128**. The backing plate **126**, in turn, is secured to a housing **130** through conventional fasteners (not shown) and which receives the plurality of blade assemblies **32**. The housing **130** is coupled to the rotatable member **20** through fasteners **132** and mounting bracket **134** (FIG. **3**). Electrical wires **136** are illustratively coupled to a conventional push-to-connect type coupler **138** which slidably receives the tabs **118**. The wires **136**, through the tabs **118** of the contact blades **110**, provide electrical communication to a conventional multi-pin connector **140**, which is coupled to the accessory **43**.

The stationary member **16** supporting the raceway **26** is coupled to the base **18** of the vehicle **12**. As noted above, the rotatable member **20** is rotatably supported by the stationary member **16** and defines center opening **22**. The blade tower **30** is coupled to move with the rotatable member **20** wherein the plurality of axially spaced blade assemblies **32** are in electrical communication with the axially spaced contact rings **28** of the raceway **26**. Individual **24**, typically a vehicle operator, inserts his torso within the center opening **22** of the rotatable member **20**. In certain illustrative embodiments, the operator support **29** rotates concurrently with the rotatable member **20**. As the rotatable member **20** rotates about the longitudinal axis **23**, the contact blades **110** of the blade assemblies **32** remain in electrical communication with the contact rings **28** of the raceway **26**.

In operation, the positioning of the operator within the opening **22** of the rotatable member **20** permits access to and operation of the accessory **43** coupled to the rotatable member **20**. As detailed above, any number of contact rings **28** and associated blade assemblies **32** may be utilized depending upon the particular needs of the accessory **43**. For example, multiple contact rings **28** and blade assemblies **32** may be utilized to provide for the transfer of electrical power and/or communication signals.

The rotary electrical contact device **10** eliminates the need for the accessory **43** supported by the rotatable member **20** to be self-powered, for example through batteries. Additionally, full rotation (i.e., at least a full 360 degrees) of the rotatable member **20** relative to the stationary member **16** may be accomplished without causing any entanglement of associated electrical cables.

While this invention has been described as having an exemplary design, the present invention may be further modified within the spirit and scope of this disclosure. This application is therefore intended to cover any variations, uses, or adaptations of the invention using its general principles. Further, this application is intended to cover such departures from the present disclosure as come within known or customary practice in the art to which this invention pertains.

The invention claimed is:

1. A rotary electrical contact device comprising:

a stationary member configured to be coupled to a base;

a rotatable member supported for rotation relative to the stationary member, the rotatable member defining a center opening configured to permit the traversing of an individual therethrough;

a raceway including a plurality of axially spaced annular contact rings supported by one of the stationary member and the rotatable member; and

a blade tower including a plurality of axially spaced blade assemblies and supported by the other of the rotatable member and the stationary member, each blade assembly including a radially extending contact blade in electrical communication with one of the axially spaced annular contact rings of the raceway,

wherein the raceway includes a plurality of axially spaced annular insulators, each of the annular insulators including a cavity receiving one of the annular contact rings, and

wherein the raceway further includes a plurality of circumferentially spaced mounting brackets coupled to the stationary member, and a plurality of clips coupling the annular insulators to the mounting brackets, and

wherein each of the plurality of clips include a pair of opposing arms, and each of the annular insulators include at least one tab lockingly received within the opposing arms.

2. A rotary electrical contact device comprising:

a stationary member configured to be coupled to a base;

a rotatable member supported for rotation relative to the stationary member, the rotatable member defining a center opening configured to permit the traversing of an individual therethrough;

a raceway including a plurality of axially spaced annular contact rings supported by one of the stationary member and the rotatable member; and

a blade tower including a plurality of axially spaced blade assemblies and supported by the other of the rotatable member and the stationary member, each blade assembly including a radially extending contact blade in electrical communication with one of the axially spaced annular contact rings of the raceway, further comprising a connector joining together opposing ends of the raceway to form a cylindrical structure,

wherein the raceway includes a plurality of axially spaced annular insulators, each of the annular insulators including a cavity receiving one of the annular contact rings, the connector includes a plurality of first and second contact tabs supported by opposing ends of the annular contact rings, and a fastener secures each of the first contact tabs to one of the second contact tabs.

3. A rotary electrical contact device comprising:

an outer stationary member;

an inner rotatable member supported for rotation relative to the stationary member, the inner rotatable member defining a center opening; and

a raceway including a plurality of axially spaced contact rings supported by one of the outer stationary member and the inner rotatable member; and

a blade tower including a plurality of axially spaced blade assemblies and supported by the other of the inner rotatable member and the outer stationary member, each blade assembly including a contact blade and a spring to radially bias the contact blade into electrical communication with one of the axially spaced contact rings of the raceway,

wherein the raceway includes a plurality of axially spaced annular insulators, each of the annular insulators including a cavity receiving one of the annular contact rings, and

wherein the raceway further includes a plurality of circumferentially spaced mounting brackets coupled to the stationary member, and a plurality of clips coupling the annular insulators to the mounting brackets, and

wherein each of the plurality of clips include a pair of opposing arms, and each of the annular insulators include at least one tab lockingly received within the opposing arms.

4. A rotary electrical contact device comprising:

an outer stationary member;

an inner rotatable member supported for rotation relative to the stationary member, the inner rotatable member defining a center opening; and

a raceway including a plurality of axially spaced contact rings supported by one of the outer stationary member and the inner rotatable member; and

a blade tower including a plurality of axially spaced blade assemblies and supported by the other of the inner rotatable member and the outer stationary member, each blade assembly including a contact blade and a spring to radially bias the contact blade into electrical communication with one of the axially spaced contact rings of the raceway,

further comprising a connector joining together opposing ends of the raceway to form a cylindrical structure,

wherein the raceway includes a plurality of axially spaced annular insulators, each of the annular insulators including a cavity receiving one of the annular contact rings, the connector includes a plurality of first and second contact tabs supported by opposing ends of the annular contact rings, and a fastener secures each of the first contact tabs to one of the second contact tabs.

5. A rotary electrical contact device for use with a vehicle, the rotary electrical contact device comprising:

an outer stationary member configured to be coupled to a vehicle platform;

a raceway including opposing ends, a plurality of axially spaced contact rings, a plurality of annular insulators receiving the plurality of contact rings, and a plurality of circumferentially spaced mounting brackets coupling the annular insulators to the outer stationary member;

an inner rotatable member supported for at least 360 degree rotation relative to the stationary member, the inner rotatable member defining a center opening having a diameter of at least 26 inches to permit the traversing of an individual therethrough;

a blade tower including a plurality of axially spaced blade assemblies and supported by the inner rotatable member, each blade assembly including a contact blade and a spring to radially outwardly bias the contact blade into electrical communication with one of the axially spaced contact rings of the raceway; and

a connector joining together opposing ends of the raceway to form a cylindrical structure, wherein the connector includes a plurality of first and second contact tabs supported by opposing ends of the annular contact rings, and a fastener secures each of the first contact tabs to one of the second contact tabs.

* * * * *