US008264486B2

(12) **United States Patent**
**Brown et al.**

(10) **Patent No.: US 8,264,486 B2**
(45) **Date of Patent: Sep. 11, 2012**

(54) **REAL-TIME HIGH-SPEED THREE DIMENSIONAL MODELING SYSTEM**

(75) Inventors: **Christopher Allen Brown**, Bloomington, IN (US); **Matthew Juhl**, Springville, IN (US)

(73) Assignee: **The United States of America as represented by the Secretary of the Navy**, Washington, DC (US)

( * ) Notice: Subject to any disclaimer, the term of this patent is extended or adjusted under 35 U.S.C. 154(b) by 689 days.

(21) Appl. No.: **12/509,428**

(22) Filed: **Jul. 24, 2009**

(65) **Prior Publication Data**

US 2011/0018872 A1 Jan. 27, 2011

(51) **Int. Cl.**
***G06T 17/00*** (2006.01)
***G06T 11/20*** (2006.01)

(52) **U.S. Cl.** ..... **345/420**; 345/442; 345/443

(58) **Field of Classification Search** ..... None
See application file for complete search history.

(56) **References Cited**

U.S. PATENT DOCUMENTS

| | | | | |
|---|---|---|---|---|
| 5,342,051 | A | 8/1994 | Rankin et al. | |
| 5,852,672 | A | 12/1998 | Lu | |
| 6,042,492 | A | 3/2000 | Baum | |
| 6,147,760 | A | 11/2000 | Geng | |
| 6,600,168 | B1 | 7/2003 | Geng | |
| 7,174,033 | B2 | 2/2007 | Yukhin et al. | |
| 7,692,707 | B2 * | 4/2010 | Kondo et al. | 348/311 |
| 7,843,429 | B2 * | 11/2010 | Pryor | 345/158 |
| 7,990,422 | B2 * | 8/2011 | Ahiska et al. | 348/218.1 |
| 2005/0128196 | A1 | 6/2005 | Popescu et al. | |
| 2006/0050929 | A1 | 3/2006 | Rast et al. | |
| 2007/0211022 | A1 | 9/2007 | Boillot | |
| 2007/0299338 | A1 | 12/2007 | Stevick et al. | |
| 2008/0118143 | A1 | 5/2008 | Gordon et al. | |

OTHER PUBLICATIONS

Mengel et al.; "Time-of-flight camera for pedestrian protection and collision mitigation"; accepted at 6$^{th}$ European Congress and Exhibition of Intelligent Transport Systems, 2007.

Winkelbach, "David-Laserscanner 2.2—Incredibly Low-Cost 3D Scanner for Everyone"; 2007; www.david-laserscanner.com.

* cited by examiner

*Primary Examiner* — Joni Hsu
*Assistant Examiner* — Michelle Chin
(74) *Attorney, Agent, or Firm* — Christopher A. Monsey

(57) **ABSTRACT**

A high-speed modeling system and a method of constructing a model are disclosed herein. In one embodiment, the system comprises first and second cameras, a control portion to synchronize the first and second cameras, and a projector of electromagnetic patterns. The first and second cameras are synchronized by the control portion to generate second frames a time interval after first frames are generated to thereby obtain a high frame-rate which is higher than the frame-rate of the first camera. Multiple imaging stations comprising first and second cameras may be directed to the path traveled by a mass at a high speed, in a prescribed arrangement, to model the mass with the high frame-rate system.

**40 Claims, 7 Drawing Sheets**

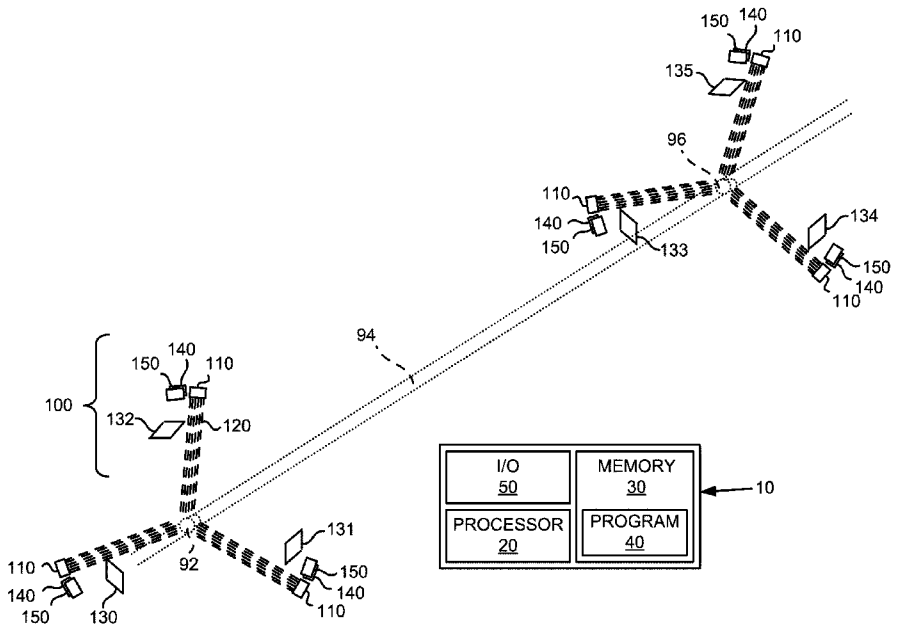

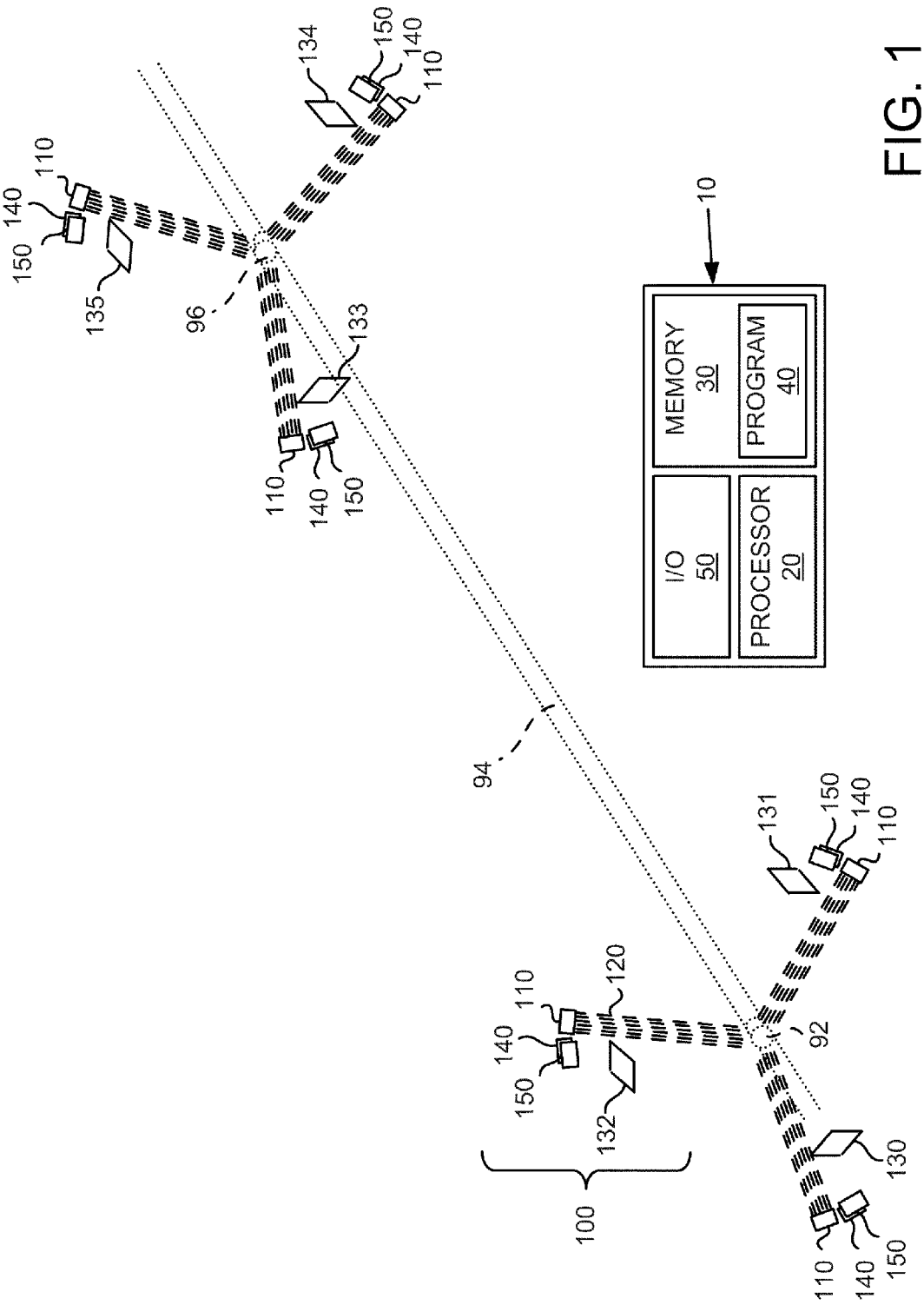
10
MEMORY
30
PROGRAM
40
I/O
50
PROCESSOR
20
94
96
92
100
110
120
130
131
132
133
134
135
140
150

FIG. 1

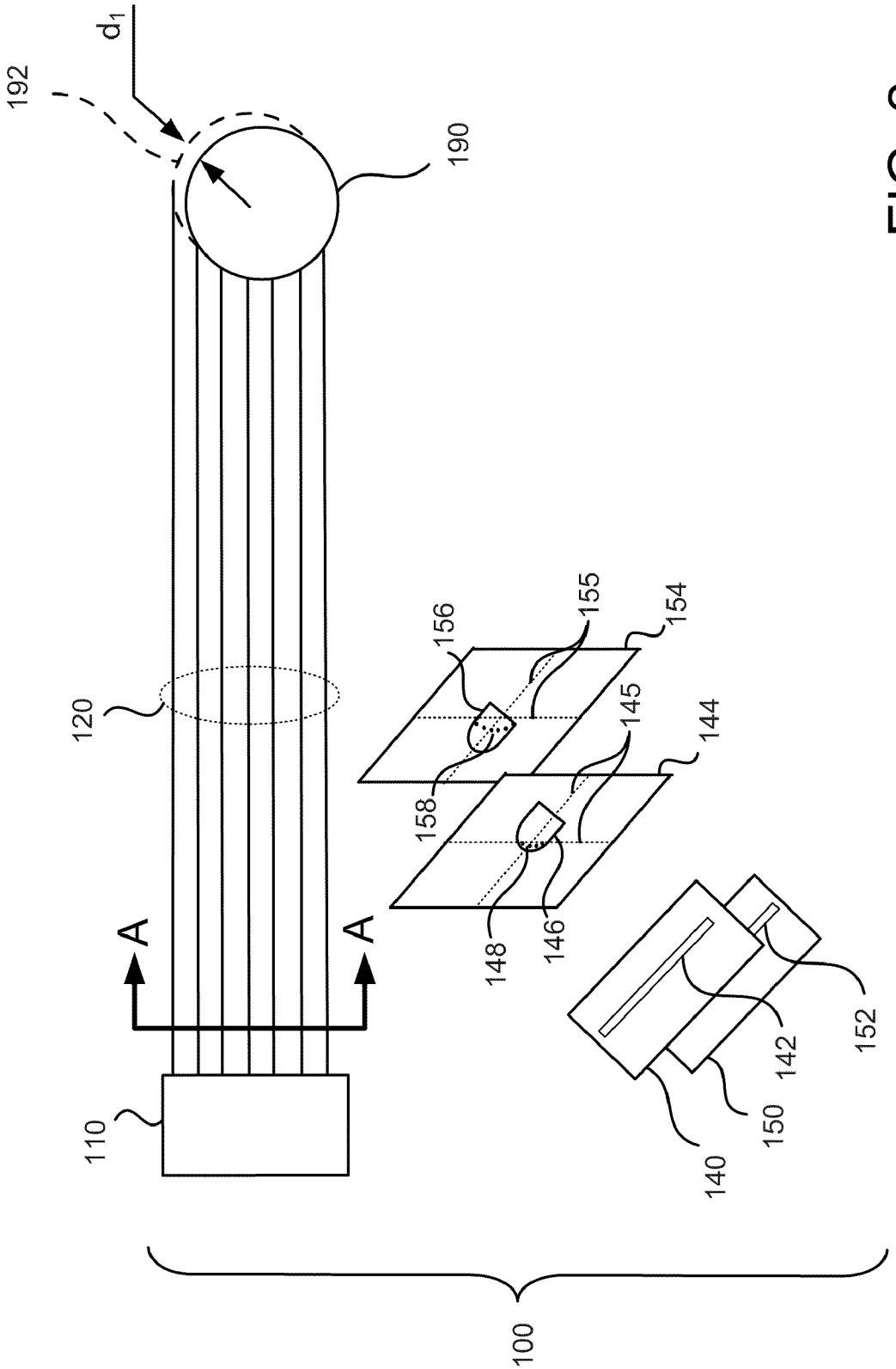
192
$d_1$
190
120
110
A
A
156
155
154
145
144
158
148
146
140
150
142
152
100

FIG. 2

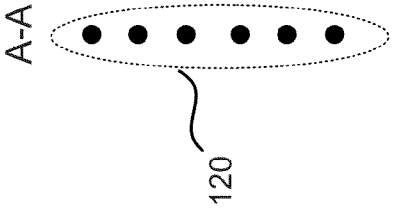


FIG. 3A

FIG. 3B

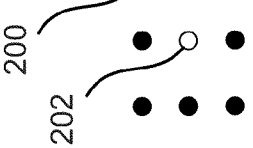


FIG. 3C

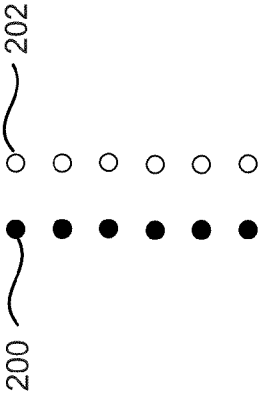


FIG. 3D

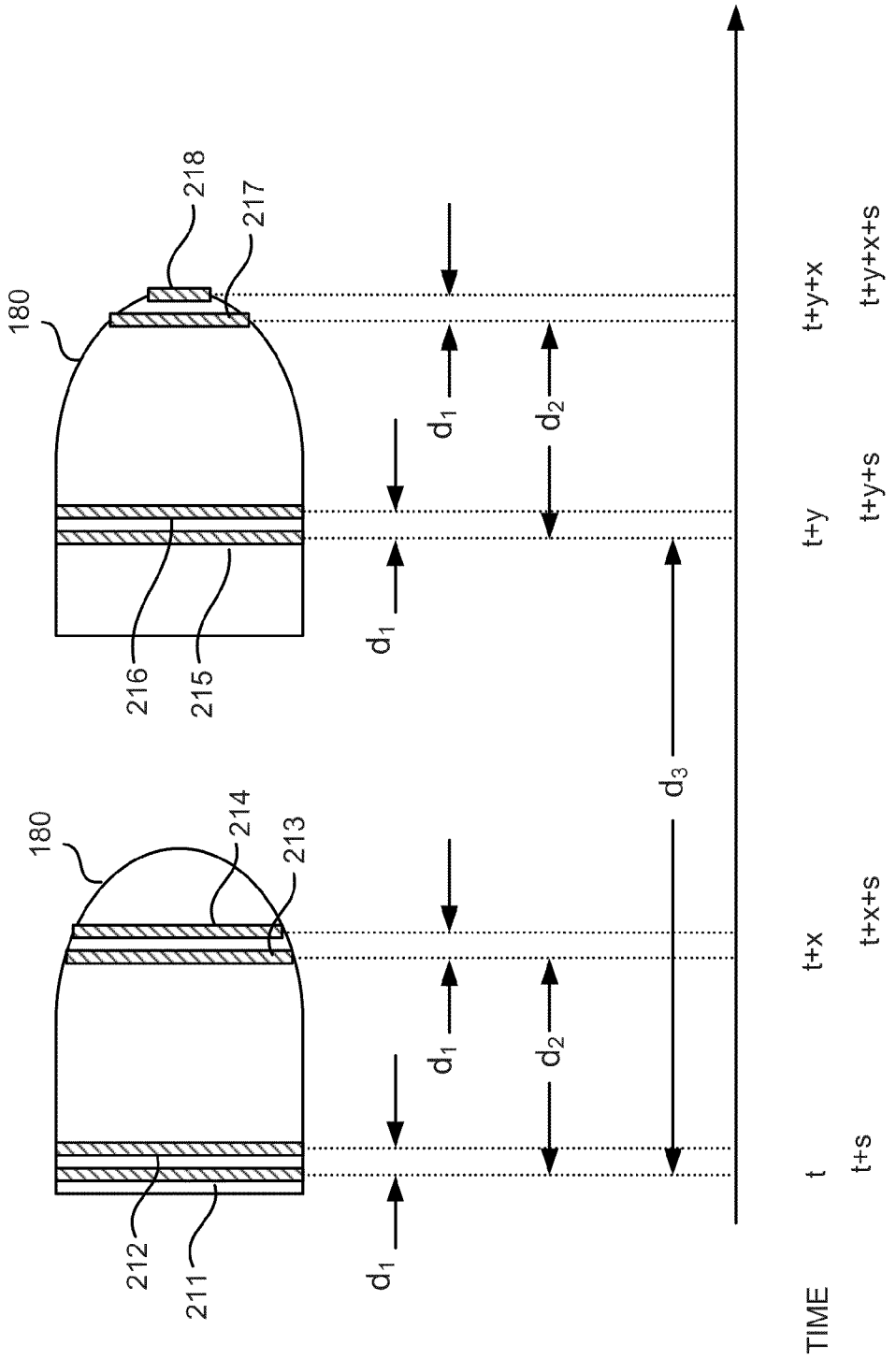
180
218
217
216
215
180
214
213
212
211
$d_1$
$d_2$
$d_3$
TIME
t
t+s
t+x
t+x+s
t+y
t+y+s
t+y+x
t+y+x+s

FIG. 4

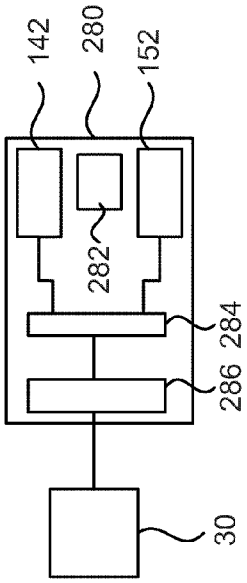


FIG. 5B

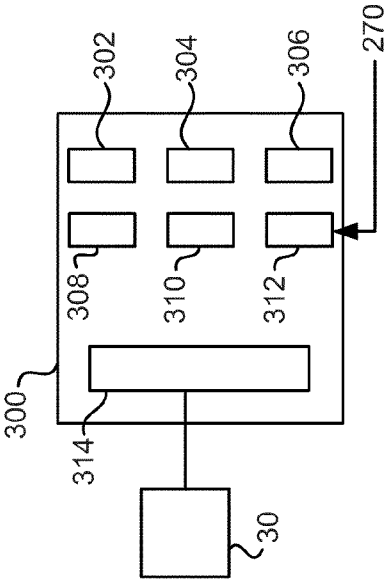


FIG. 5C

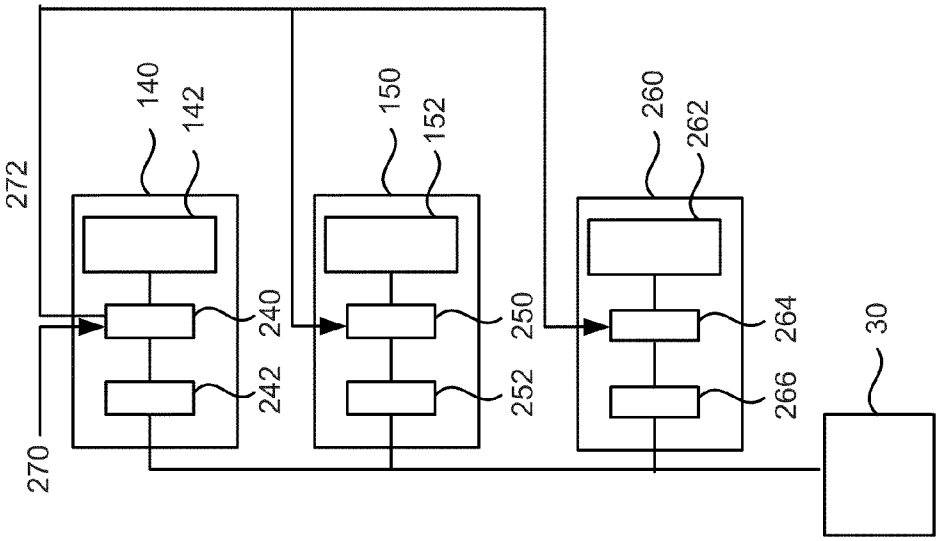


FIG. 5A

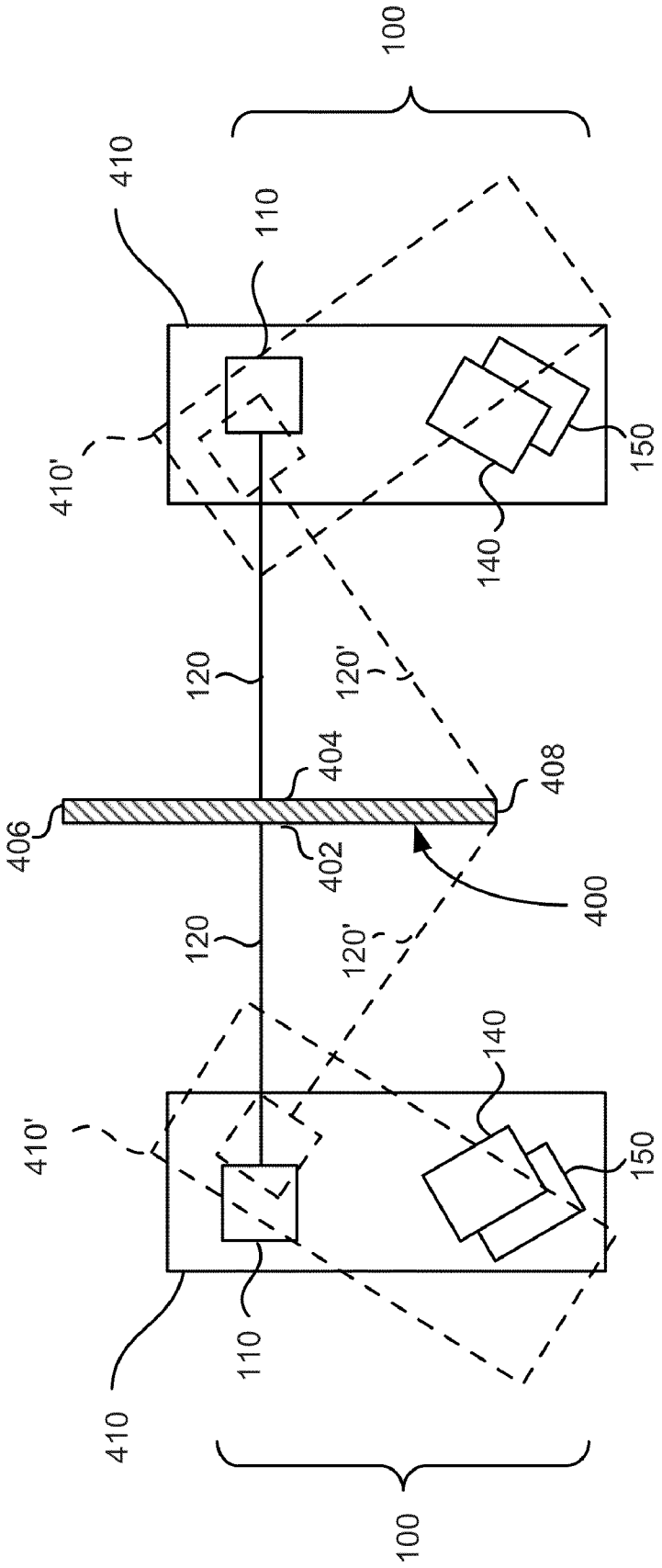
100
410
110
410'
150
140
120
120'
404
408
406
402
400
120
120'
140
410'
150
110
410
100

FIG. 6

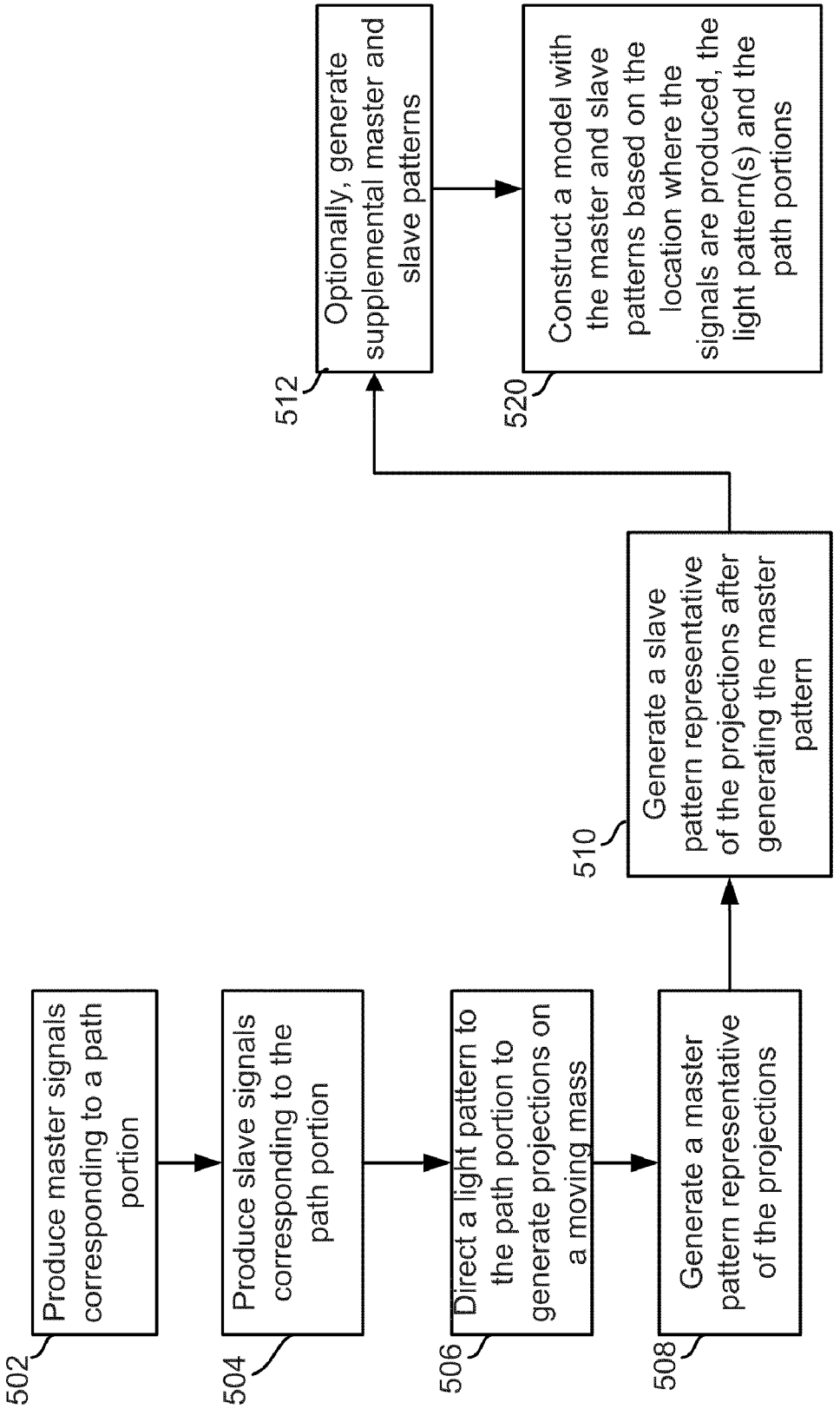
502
Produce master signals corresponding to a path portion
504
Produce slave signals corresponding to the path portion
506
Direct a light pattern to the path portion to generate projections on a moving mass
508
Generate a master pattern representative of the projections
510
Generate a slave pattern representative of the projections after generating the master pattern
512
Optionally, generate supplemental master and slave patterns
520
Construct a model with the master and slave patterns based on the location where the signals are produced, the light pattern(s) and the path portions

FIG. 7

# REAL-TIME HIGH-SPEED THREE DIMENSIONAL MODELING SYSTEM

## STATEMENT REGARDING FEDERALLY SPONSORED RESEARCH OR DEVELOPMENT

The invention described herein was made in the performance of official duties by employees of the Department of the Navy and may be manufactured, used, licensed by or for the United States Government for any governmental purpose without payment of any royalties thereon.

## FIELD OF THE DISCLOSURE

The present disclosure relates generally to a system and method for modeling a mass moving at high velocity and, more particularly, to a high frame-rate video system which captures images of electromagnetic patterns projected onto the moving mass to compose a model of the mass.

## BACKGROUND

Video systems can be used to determine characteristics of a moving mass. One common application of such systems is in sports analysis and testing in which characteristics of a moving object are extracted and used as a reference. In golf, for example, a golf ball can be extracted from video frames and successive frames can be compared to determine the flight of the ball. Similar systems can be used in baseball to determine the speed, spin, and flight-path of a ball. Laser beams placed near the pitching mound can be used to characterize the speed of a baseball bat based on the speed at which the bat intersects the laser beams. These systems depend on the relatively slow speed of the moving mass and the relatively unchanging shape of the mass. Imaging systems are also used to create 3D models of stationary objects. These systems are inadequate. Improved systems and methods are needed to model aeronautical objects, fluid flow, ballistic events and other mass systems for modeling mass systems moving at speeds exceeding the capacity of currently available video cameras.

## SUMMARY

A high-speed modeling system and a method of constructing a model are disclosed herein. In one embodiment, the system comprises a master image sensor, at least one slave image sensor, a projector, a master processing portion and at least one slave processing portion. The master image sensor produces master signals corresponding to a path portion of a path traveled by a mass. The at least one slave image sensor produces slave signals corresponding to the path portion. The projector directs an electromagnetic radiation pattern to the path portion that generates first and second reflections when the electromagnetic radiation pattern intersects the mass. The master processing portion generates a master frame based on the master signals, the master frame having a master pattern representative of the first reflections. The at least one slave processing portion generates a slave frame based on the slave signals, the slave frame having a slave pattern representative of the second reflections. The slave processing portion is synchronized with the master processing portion to generate the slave frame at a time interval after the master processing portion generates the master frame. The master and slave patterns are operable to construct a model of the mass based on the time interval and positional relationships between the master and slave image sensors and the projector.



The features of this invention, and the manner of attaining them, will become more apparent and the invention itself will be better understood by reference to the following description of the disclosed embodiments taken in conjunction with the accompanying drawings.

## BRIEF DESCRIPTION OF THE DRAWINGS

FIG. **1** is a conceptual perspective view of an embodiment of a modeling system according the invention.

FIG. **2** is a conceptual perspective view of an imaging station shown in the modeling system of FIG. **1**.

FIGS. **3**A, **3**B, **3**C and **3**D are conceptual plan views of alternative electromagnetic radiation patterns.

FIG. **4** is plan view of a timing diagram showing a mass in two positions.

FIGS. **5**A, **5**B and **5**C are block diagrams of alternative embodiments of image sensors and imaging stations according to the invention.

FIG. **6** is plan view of another embodiment of a modeling system according to the invention showing synchronously pivoting imaging stations scanning a web.

FIG. **7** is block diagram of an embodiment of a modeling method according to the invention.

Corresponding reference characters indicate corresponding parts throughout the several views. Although the drawings represent embodiments of the present disclosure, the drawings are not necessarily to scale and certain features may be exaggerated to better illustrate and explain the embodiments. The exemplifications set out herein illustrate embodiments of the invention in several forms and such exemplification is not to be construed as limiting the scope of the invention in any manner.

## DETAILED DESCRIPTION

The embodiments discussed below are not intended to be exhaustive or limit the invention to the precise forms disclosed in the following detailed description. Rather, the embodiments are chosen and described so that others skilled in the art may utilize their teachings.

FIG. **1** is a conceptual perspective view of a modeling system according to one embodiment of the invention. The system comprises a plurality of imaging stations **100**, each imaging station having projector **110** generating an electromagnetic pattern, e.g., a plurality of beams **120**, and first camera **140** and second camera **150** capturing reflections of beams **120** on a moving mass in video frames generated by first camera **140** and second camera **150**. Cameras **140**, **150** are prior-art cameras comprising an image sensor and an image processing portion. Advantageously, second camera **150** is synchronized with first camera **140** by a time interval to capture frames after each frame captured by first camera **140** and before the subsequent frame captured by camera **140**. The time interval can be created in any number of ways. For example camera **140** may be started first, and after the time interval, camera **150** may be started. Since the framing cycle of each camera is constant, the starting delay synchronizes all the frames. Alternatively, both cameras can be started and the timing of the frame generation monitored. The frame generation cycle of camera **150** can then be incrementally delayed to achieve the desired time interval. A timer may be applied to adjust the time interval. Synchronization may be achieved by delaying camera **150**, delaying the production of a timing signal from camera **140** by the time interval, or in any other manner which creates a time interval between the timing cycle of the two cameras. The frame-rate of first and second

cameras **140**, **150** be equal or different. The synchronization effect results in imaging station **100** having a frame-rate which is higher, e.g. double, than the frame-rates of first and second camera **140**, **150**. First camera **140** therefore acts as a master and second camera **150** acts as a slave (from a timing point of view). Additional third, fourth and more cameras may be used to triple, quadruple and further multiply the frame-rate of first camera **140**. As used hereinbelow in accordance with the descriptions provided in this paragraph, "high frame-rate" means a frame-rate which is higher than the frame-rate of a master camera, produced by synchronizing one or more slave image sensors with a master sensor and "high frame-rate camera" means a camera including synchronized master/slave imaging sensors to capture images at a high frame-rate. As described below with reference to alternative embodiments of the invention, a high frame-rate camera may comprise synchronized image sensors in a common enclosure. Alternatively, a high frame-rate system may comprise multiple enclosures having image sensors, e.g. prior-art cameras, which are synchronized as described herein.

An image sensor is described, generally, as a grid of pixel photosensors dedicated to capturing light. Digital photo camera image sensors have resolutions greater than 10 megapixels. Video cameras have much smaller resolutions due to the time required by processing portions to "read" the sensors. As camera frame-rates increase, resolutions decrease. If resolutions decrease into single pixel ranges, it is not possible to obtain a useful model unless large numbers of image sensors are used. In exemplary embodiments, image sensors have resolutions of at least 25 pixels, more preferably 100 pixels, and even more preferably more than 400 pixels. A processing portion may comprise an electronic circuit, gates, shift-registers and processing sequences which, alone or in combination, convert the sensed light signals into digital data. Image sensors may comprise CCD, CMOS or other photosensors well known in the art. Generally, processing portions scan the grid to convert light to voltage and then to digital data which is stored in a memory buffer. As technology improves, pixel data transfer rates may continue to increase thereby enabling faster frame-rates at higher resolutions.

The memory buffer is, generally, co-located on a chip with the grid and processing portion. Image sensors may detect multiple colors. Bayer sensors use a color filter array that passes red, green, or blue light to selected pixels, forming interlaced grids sensitive to red, green, and blue. In prior-art cameras, the image is then interpolated using a demosaicing algorithm to produce a color image. Advantageously, in one embodiment of the invention, the color pixel data is not interpolated but, instead, three frames are obtained simultaneously from one image sensor to isolate light beams of different colors. In an alternative embodiment, a Foveon X3 sensor is used comprising an array of layered sensors where every pixel contains three stacked sensors sensitive to the individual colors. Similarly, the colors are separated and not interpolated. In a further embodiment of the invention, multiple single-color image sensors are used, each image sensor capturing a different color. As described below with reference to FIG. **5**, cameras **140** and **150**, and image sensors **142** and **152**, may comprise any number of configurations and the invention is not limited to a specific embodiment having individual cameras and single image sensors in each camera. The sensor, processing portion and memory are sometimes referred to as an "imager" which captures light and converts the light into an array of digital signals which may be displayed as a digital frame representing the captured light. The array of digital signals may also be referred to as a frame for convenience.

Referring again to FIG. **1**, beams **120** are directed at path **94** traveled by the mass at a high velocity, e.g. between 147 and 8,000 fps and even faster. Three imaging stations **100** are directed at first path portion **92** of path **94** and the additional imaging stations **100** are directed to second path portion **96** which is spaced apart from first path portion **92**. First and second path portions **92** and **96** are shown in phantom. Each imaging station **100** captures video frames of a scene, each scene having a different viewpoint of the object, such as scene **130**, **131**, **132**, **133**, **134** and **135**, which is determined by the position, e.g. location and orientation, of each imaging station **100**. The imaging stations directed to the same path portion may be positioned substantially on the same plane, which plain intersects the path portion. The imaging stations may be oriented, preferably, 120 degree from each other. However, the imaging stations may be oriented in other directions so long as they can capture master and slave patterns from the same projected electromagnetic radiation pattern. Each frame may include a pattern based on the plurality of reflections, e.g. dots or lines, reflecting off the moving mass travelling in path **94**. The video frames captured by each of the six imaging stations **100** are stored in memory **30** of computing system **10**. Computing system **10** further includes processor **20**, program **40** embedded in memory **30** and I/O **50**. Program **40** comprises a plurality of processing sequences for analyzing the frames to construct the model of the moving mass.

FIG. **2** is a conceptual perspective view illustrating the operation of imaging station **100**. Projector **110** is directed at a mass shown in first position **190** and second position **192** (shown in phantom). A pattern of electromagnetic waves, e.g. light beams **120**, intersect the mass initially at position **190** and later at position **192** producing two sets of reflections showing different portions of the mass. First frame **144** captures an image of the mass, illustratively object **146**, and also the first set of reflections, illustratively master pattern **148**. Second frame **154** captures the same scene but showing the mass at position **192** included in frame **154** as an object, illustratively object **156**, including the second or subsequent set of reflections, illustratively slave pattern **158**. The distance between first position **190** and second position **192** is defined as $d_1$ which represents the distance traveled by the mass between frames **144** and **154**. Frame **154** is captured by image sensor **142** provided in camera **140** and frame **154** is captured by image sensor **152** provided in camera **150**. Frames **144** and **154** capture images of substantially the same scene. The travel distance $d_1$ is illustrated in frames **144** and **154** by the lateral translation of object **156** relative to object **146** and frame centerlines **145**, **155**, and the substantially central position of patterns **148** and **158** representing the unchanging position of beams **120**.

FIGS. **3**A to **3**D, a plurality of patterns of electromagnetic radiation are shown. A linear pattern is shown in FIG. **3**A which may be generated by optically splitting a beam produced by a laser source or other source of focused visible or infrared light. More or less than six beams may be used. The number of beams is determined by design constraints such as distance, cost, environmental conditions, velocity of the mass, and the like. Beams may be close together to form a plane in which case the beams may be indistinguishable from each other. Advantageously, beams spaced apart equidistantly may simplify the calculation load on system **10** by enabling comparison of ratios of dots in patterns **148** and **158** vis a vis calculating geometric relationships between them. FIG. **3**B illustrates an orthogonal pattern of beams **200** which has the same advantages provided by equidistantly disposed parallel beams. FIG. **3**C illustrates an orthogonal pattern comprising beams **200** and beam **202**, each having a different

color. Advantageously, a central beam **202** forming an orthogonal pattern with beams of different color provides additional information which simplifies modeling. FIG. **3**D illustrates an orthogonal pattern comprising parallel beams **200** and **202**. Beam colors may be changed with filters.

Referring now to FIG. **4**, a conceptual diagram is shown of mass **180** illustrating the timing sequence of frames captured with two spaced apart imaging stations **100**. Eight lines, or frames, numbered **211** to **218** are shown. Frames **211-214** are captured by the first imaging station **100** and frames **215-218** are captured by the second imaging station **100**. Frame **211** is captured at time t by the master and frame **212** is captured at time t+s by the slave camera. Distances $d_1$, $d_2$ and $d_3$ represent movement of mass **180** from time t to different time intervals related to the frame-rate and location of master and slave image sensors. Distance $d_1$ is derived from the value of and the velocity v of the mass. Subsequently, the master and slave cameras capture second frames numbered **213** and **214**, respectively, at times t+x and t+x+s, where x corresponds to the frame-rate of the master camera. Distance $d_2$ is derived from the frame-rate of the master camera, distance between image sensors, and the velocity v of mass **180**. Similarly, the second pair of master/slave cameras capture frames **215-218** at times t+y, t+y+s, t+y+x, and t+y+x+s, respectively. Distance $d_3$ is derived from the frame-rate of the master camera, the velocity v of mass **180** and the linear distance between master cameras along path **94**. It is assumed for illustration purposes that both pairs of master/slave image sensors are spaced by distance ex. Different systems may be constructed where master/slave image sensor distances vary. Systems with additional pairs of image sensors may be constructed, in both linear and co-planar arrangements as shown in FIG. **1** or in any arrangement wherein reflections from a projector are visible in the master and slave frames. Given the synchronization time s and the distance between imaging stations **100**, system **10** is able to correlate frames **211-218** to produce a three-dimensional model of mass **180** with algorithms for producing wire-frame models based on known system geometry and correlation of points based on the geometry of the system generating the points. An exemplary algorithm is disclosed in U.S. Pat. Appl. No. 2005/0128196 which is incorporated herein by reference in its entirety. Depending of the viewpoint of master/slave cameras, frames may be morphed before the correlation takes place. If the angle between the viewpoints is small relative to the distance between the image sensors and path **94**, morphing may not be required.

Mass **180** is shown having a projectile shape comprising a single mass portion to illustrate a modeling system. However, the modeling system is not limited to single mass portions. In the case of exploding projectiles, for instance, mass **180** comprises a plurality of mass portions which may move at slightly different speeds and directions at different points in time. Each mass portion may collide with other mass portions and the collisions may change the configuration of the profile of mass **180**. The profile may rotate as well as change shape. Advantageously, providing linearly spaced-apart sets of imaging stations enables system **10** to capture rotations and shape changes by acquiring data from multiple viewpoints at closely spaced time intervals. The synchronization delay between master/slaves image sensors may be adjusted to increase the resolution of the model. Obviously, additional image sensors may also be provided with the same effect. Mass **180** may also represent a fluid flow, e.g. liquid comprising distinguishing features. The distinguishing features, e.g. bubbles, lines, colors and the like, may similarly be correlated to model flow. Enhanced three-dimensional models may be obtained by providing additional imaging stations which provide additional datapoints for the model.

Referring now to FIGS. **5**A, **5**B and **5**C, different arrangements of cameras and image sensors are shown. FIG. **5**A illustrates cameras **140**, **150** and **260** which produce video frames stored in memory **242**, **252**, and **266**, respectively, before transferring the frames to system memory **30**. Processing portions **240**, **250**, **264** convert photosensor signals from image sensors **142**, **152**, **262** into image data, or frames, comprising pixel data. Memory **242**, **252** and **266** may comprise fast RAM, which is faster than memory **30**, and may also be incorporated with processing portions **242**, **252**, **266**, respectively to further increase access time by not requiring image data transfers through an data bus. Trigger signals **270**, **272** may be provided from an external trigger event and from master camera **140** to synchronize cameras **150** and **260**, such that video recording is synchronized with the movement of mass **180** and, with respect to cameras **150** and **260**, video recording is delayed relative to recording by camera **140** by a fraction of the time required by camera **140** to capture a subsequent image. External trigger events may comprise a start signal initiating motion of mass **180** and/or a detector signal which senses movement of mass **180** a predetermined distance from camera **140**. Signal **270** may also be provided by system **30**. FIG. **5**B illustrates an embodiment of an imaging station **280** comprising image sensors **142** and **152** equally spaced and having projector portion **282** disposed between them. Projector portion **282** may be a lens coupled to projector **110** to enable construction of an integrated imaging station. Memory **286** receives pixel data from processing portion **284** which converts pixel signals from image sensors **142** and **152** into pixel data. It should be understood that image sensors **142** and **152** may also comprise a single sensor grid, portions of which are polled at different times. For example, processing portion **284** may obtain signals from the grid in parallel, wherein signals are obtained from one portion of the grid and, after a time interval, signals are obtained from another portion of the grid while signals are still being obtained from the first portion of the grid. FIG. **5**C illustrates an embodiment of high frame-rate camera **300** having image sensors **302**, **304**, **306** and memory **314** which thereby triples the frame-rate of a prior-art master camera. Processing portions **308**, **310**, **312** trigger at successive intervals, and may initiate triggering (frame generation) from signal **270**, to generate pixel data from signals produced by imaging sensors **302**, **304** and **306**.

So far, various arrangements of stationary imaging stations were described. In a further embodiment of the invention, two imaging stations are pivotally and synchronously coupled, advantageously, to scan two sides of a moving web from edge to opposite edge. Such a system may be used for quality control purposes to identify objects, holes and imperfections on the web as it moves between the imaging stations. Referring to FIG. **6**, imaging stations **100** are shown supported by frames **410**. Frames **410** are shown in a second position as frames **410'**. Beams **120** are directed to opposite surfaces **402**, **404** of a portion of web **400** intermediate edges **406**, **408**. Beams **120'** are directed to edge **408**. As frames **410** pivot, beams **120'** scan surfaces **402**, **404** until they reach edge **406** at which time the process repeats in the opposite direction. Two-dimensional scanning may be implemented in a similar manner. Mechanisms for pivotally supporting a camera to scan across a web are well known.

Referring now to FIG. **7**, a high-speed modeling method is disclosed comprising a number of steps. At step **502**, master signals corresponding to a path portion of a path traveled by a mass are produced. At step **504**, slave signals corresponding

to the path portion are produced. At step **506**, a light pattern is directed to the path portion to generate reflections when the light pattern intersects the mass. The light pattern comprises at least one of red, green and blue light. Additional light patterns may be provided by one or more projectors comprising at least a first light color. A light pattern produced by a supplemental projector may comprise at least a second light color. In one embodiment, the angle formed between the light pattern, the path portion and the position where the master signals are produced is less than about 20 degrees.

At step **508**, a master pattern is generated which is representative of the reflections from the master signals. At step **510**, at least one slave pattern is generated representative of the reflections from the slave signals a time interval after generating the master pattern and before generating a subsequent master pattern. The master and slave patterns are operable to construct a model of the mass based on the time interval and relationships between locations where the master and slave signals are produced, a direction of the light pattern, and the path portion. The patterns are included in frames generated by the processing portions at a processing portion frame-rate. Synchronization of master and slave processing portions multiplies the frame-rate of the master processing portion.

Optionally, at step **512**, supplemental master and slave patterns may be produced with supplemental imaging stations, wherein the master and slave patterns and supplemental master and slave patterns generated by the supplemental imaging stations are operable to construct an enhanced model of the mass based on the model and positional relationships between the first and supplemental imaging stations. The supplemental patterns may be produced before, after or concurrently with the generation of the master and slave patterns produced by the first imaging station.

At step **520**, the model is constructed. A synchronized frame-rate obtained by synchronizing production of a plurality of master and slave patterns exceeds, in one embodiment, 20,000 frames per second at a resolution greater than 400 pixels.

This invention has been described as having an exemplary design, the present invention may be further modified within the spirit and scope of this disclosure. This application is therefore intended to cover any variations, uses, or adaptations of the invention using its general principles. Further, this application is intended to cover such departures from the present disclosure as come within known or customary practice in the art to which this invention pertains.

The invention claimed is:

**1**. A high-speed modeling system comprising:

a master image sensor producing master signals corresponding to a path portion of a path traveled by a mass;

at least one slave image sensor producing slave signals corresponding to the path portion;

a projector directing an electromagnetic radiation pattern to the path portion that generates first and second reflections when the electromagnetic radiation pattern intersects the mass;

a master processing portion generating a master frame based on the master signals, the master frame having a master pattern representative of the first reflections;

at least one slave processing portion generating a slave frame based on the slave signals, the slave frame having a slave pattern representative of the second reflections, and the slave processing portion being synchronized with the master processing portion to generate the slave frame at a time interval after the master processing portion generates the master frame; and

a second projector producing a second electromagnetic radiation pattern and third and fourth reflections when the second electromagnetic radiation pattern intersects the mass, wherein the at least one supplemental imaging station generates supplemental master and slave patterns based on the third and fourth reflections;

wherein the master and slave patterns are operable to construct a model of the mass based on the time interval and positional relationships between the master and slave image sensors and the projector;

wherein the master imaging sensor, the slave imaging sensor, the master processing portion and the slave processing portion comprise a first imaging station, further including at least one supplemental imaging station generating supplemental master and slave patterns, wherein the master and slave patterns and supplemental master and slave patterns, and positional relationships between the first and supplemental imaging stations, are operable to enhance the model with the addition of the supplemental master and slave patterns.

**2**. The high-speed modeling system of claim **1**, wherein the time interval is shorter than the time elapsed between generation of the master frame and generation of a consecutive master frame by the master processing portion.

**3**. The high-speed modeling system of claim **1**, wherein the system comprises a control portion configured to start generation of the slave frame by the slave processing portion after a time delay equal to the time interval, wherein the time delay begins when the master processing portion starts generating the master frame.

**4**. The high-speed modeling system of claim **1**, wherein the master imaging sensor and the at least one slave imaging sensor are located in an enclosure, and a projecting portion of the projector is supported by the enclosure, wherein the projecting portion of the projector projects the electromagnetic radiation pattern.

**5**. The high-speed modeling system of claim **1**, wherein the electromagnetic radiation pattern has a shape comprising at least one of a straight line, a square, a rectangle and a triangle, and wherein the shape comprises one of lines, dots, and a combination of lines and dots.

**6**. The high-speed modeling system of claim **1**, wherein the master imaging sensor and the master processing portion are located in a first enclosure and the slave imaging sensor and the slave processing portion are located in a second enclosure.

**7**. The high-speed modeling system of claim **1**, further including a computing system including software configured to construct the model.

**8**. The high-speed modeling system of claim **1**, wherein an angle formed between the electromagnetic radiation pattern and a line connecting the first path portion and the master image sensor is less than about 20 degrees.

**9**. The high-speed modeling system of claim **1**, wherein a synchronized frame-rate obtained by synchronizing the master and the at least one slave processing portions exceeds 10,000 frames per second at a resolution greater than 400 pixels.

**10**. The high-speed modeling system of claim **1**, wherein the electromagnetic radiation pattern comprises one of infrared and visible light.

**11**. The high-speed modeling system of claim **1**, wherein the electromagnetic radiation pattern comprises at least one of red, green and blue light.

**12**. The high-speed modeling system of claim **1**, wherein the second electromagnetic radiation pattern is directed to a second path portion.

13. The high-speed modeling system of claim 12, wherein the at least one supplemental imaging station comprises five supplemental imaging stations, two of the five supplemental imaging stations generating supplemental slave patterns based on the electromagnetic radiation pattern, and three of the five supplemental imaging stations generating supplemental slave patterns based on the second electromagnetic radiation pattern.

14. The high-speed modeling system of claim 1, further including a first frame supporting the first imaging station and a second frame supporting the supplemental imaging station, the first imaging station positioned opposite the at least one supplemental imaging station, and the first and second frames pivotally mounted, wherein the path portion is located between the first and second frames and the first and a second imaging stations are operable to synchronously pivot and scan the first path portion.

15. The high-speed modeling system of claim 1, wherein the electromagnetic radiation pattern of the projector in the first imaging station comprises at least a first light color and the electromagnetic radiation pattern of the projector in the supplemental imaging station comprises at least a second light color.

16. A high-speed method of modeling comprising:

directing a electromagnetic radiation pattern to a path portion of a path traveled by a mass;

initiating capture of a master pattern with a master imager, the master pattern representing a first reflection pattern generated when the electromagnetic radiation pattern intersects the mass;

waiting a time interval after the initiating capture of a master pattern step;

initiating capture of at least one slave pattern with a slave imager, the slave pattern representing a second reflection pattern generated when the electromagnetic radiation pattern intersects the mass, the at least one slave pattern being synchronized with the master pattern by the time interval; and

generating a second electromagnetic radiation pattern to produce third and fourth reflections when the second electromagnetic radiation pattern intersects the mass, wherein the at least one supplemental imaging station generates supplemental master and slave patterns based, respectively, on the third and fourth reflections;

wherein the master and slave patterns are operable to construct a model of the mass based on the time interval, a direction of the electromagnetic radiation pattern, an angle formed by the electromagnetic radiation pattern and a line intersecting the path portion and a location of the master imager, and a second angle formed by the electromagnetic radiation pattern and a line intersecting the path portion and the location of the slave imager;

wherein the master and at least one slave patterns are generated by a first imaging station, further including the step of producing supplemental master and at least one slave patterns with at least one supplemental imaging station, wherein the master and slave patterns and the supplemental master and slave patterns are operable to enhance the model based positional relationships between the first and supplemental imaging stations.

17. The high-speed modeling method of claim 16, further including the step of constructing the model.

18. The high-speed modeling method of claim 16, wherein at least one of the angle and the second angle is less than about 20 degrees.

19. The high-speed modeling method of claim 16, wherein a synchronized frame-rate obtained by synchronizing generation of a plurality of master and slave patterns exceeds 10,000 frames per second at a resolution greater than 400 pixels.

20. The high-speed modeling method of claim 16, wherein the electromagnetic radiation pattern comprises at least one visible and infrared light.

21. The high-speed modeling method of claim 16, wherein the electromagnetic radiation pattern comprises at least one of red, green and blue light.

22. The high-speed modeling method of claim 16, wherein at least one slave pattern is based on the electromagnetic radiation pattern and on the second electromagnetic radiation pattern.

23. The high-speed modeling method of claim 16, wherein the second electromagnetic radiation pattern is directed to a second path portion of the path.

24. The high-speed modeling method of claim 23, wherein the at least one supplemental imaging station comprises five supplemental imaging stations, and wherein two of the five supplemental imaging stations generate supplemental slave patterns based on the electromagnetic radiation pattern, and three of the five supplemental imaging stations generate supplemental slave patterns based on the second electromagnetic radiation pattern.

25. The high-speed modeling method of claim 16, wherein the electromagnetic radiation pattern comprises at least a first light color and the second electromagnetic radiation pattern comprises at least a second light color.

26. A method of making a high-speed modeling system comprising:

providing a master image sensor producing master signals corresponding to a path portion of a path traveled by a mass;

providing at least one slave image sensor producing slave signals corresponding to the path portion;

providing a projector directing an electromagnetic radiation pattern to the path portion that generates first and second reflections when the electromagnetic radiation pattern intersects the mass;

providing a master processing portion generating a master frame based on the master signals, the master frame having a master pattern representative of the first reflections;

providing at least one slave processing portion generating a slave frame based on the slave signals, the slave frame having a slave pattern representative of the second reflections, and the slave processing portion being synchronized with the master processing portion to generate the slave frame at a time interval after the master processing portion generates the master frame; and

providing a second projector producing a second electromagnetic radiation pattern and third and fourth reflections when the second electromagnetic radiation pattern intersects the mass, wherein the at least one supplemental imaging station generates supplemental master and slave patterns based on the third and fourth reflections;

wherein the master and slave patterns are operable to construct a model of the mass based on the time interval and positional relationships between the master and slave image sensors and the projector;

wherein the master imaging sensor, the slave imaging sensor, the master processing portion and the slave processing portion comprise a first imaging station, further including at least one supplemental imaging station generating supplemental master and slave patterns, wherein the master and slave patterns and supplemental master and slave patterns, and positional relationships between the first and supplemental imaging stations, are operable

to enhance the model with the addition of the supplemental master and slave patterns.

**27**. The method of making the high-speed modeling system of claim **26**, wherein the time interval is shorter than the time elapsed between generation of the master frame and generation of a consecutive master frame by the master processing portion.

**28**. The method of making the high-speed modeling system of claim **26**, wherein the system comprises a control portion configured to start generation of the slave frame by the slave processing portion after a time delay equal to the time interval, wherein the time delay begins when the master processing portion starts generating the master frame.

**29**. The method of making the high-speed modeling system of claim **26**, wherein the master imaging sensor and the at least one slave imaging sensor are located in an enclosure, and a projecting portion of the projector is supported by the enclosure, wherein the projecting portion of the projector projects the electromagnetic radiation pattern.

**30**. The method of making the high-speed modeling system of claim **26**, wherein the electromagnetic radiation pattern has a shape comprising at least one of a straight line, a square, a rectangle and a triangle, and wherein the shape comprises one of lines, dots, and a combination of lines and dots.

**31**. The method of making the high-speed modeling system of claim **26**, wherein the master imaging sensor and the master processing portion are located in a first enclosure and the slave imaging sensor and the slave processing portion are located in a second enclosure.

**32**. The method of making the high-speed modeling system of claim **26**, further including providing a computing system including software configured to construct the model.

**33**. The method of making the high-speed modeling system of claim **26**, wherein an angle formed between the electromagnetic radiation pattern and a line connecting the first path portion and the master image sensor is less than about 20 degrees.

**34**. The method of making the high-speed modeling system of claim **26**, wherein a synchronized frame-rate obtained by synchronizing the master and the at least one slave processing portions exceeds 10,000 frames per second at a resolution greater than 400 pixels.

**35**. The method of making the high-speed modeling system of claim **26**, wherein the electromagnetic radiation pattern comprises one of infrared and visible light.

**36**. The method of making the high-speed modeling system of claim **26**, wherein the electromagnetic radiation pattern comprises at least one of red, green and blue light.

**37**. The method of making the high-speed modeling system of claim **26**, wherein the second electromagnetic radiation pattern is directed to a second path portion.

**38**. The method of making the high-speed modeling system of claim **37**, wherein the at least one supplemental imaging station comprises five supplemental imaging stations, two of the five supplemental imaging stations generating supplemental slave patterns based on the electromagnetic radiation pattern, and three of the five supplemental imaging stations generating supplemental slave patterns based on the second electromagnetic radiation pattern.

**39**. The method of making the high-speed modeling system of claim **26**, further including providing a first frame supporting the first imaging station and a second frame supporting the supplemental imaging station, the first imaging station positioned opposite the at least one supplemental imaging station, and the first and second frames pivotally mounted, wherein the path portion is located between the first and second frames and the first and a second imaging stations are operable to synchronously pivot and scan the first path portion.

**40**. The method of making the high-speed modeling system of claim **26**, wherein the electromagnetic radiation pattern of the projector in the first imaging station comprises at least a first light color and the electromagnetic radiation pattern of the projector in the supplemental imaging station comprises at least a second light color.

* * * * *