US008149153B1

(12) **United States Patent**
Wieneke et al.

(10) **Patent No.: US 8,149,153 B1**
(45) **Date of Patent: Apr. 3, 2012**

(54) **INSTRUMENTATION STRUCTURE WITH REDUCED ELECTROMAGNETIC RADIATION REFLECTIVITY OR INTERFERENCE CHARACTERISTICS**

(75) Inventors: **Garry Wieneke**, Jasper, IN (US); **Ameer Beitvashahi**, Bloomington, IN (US); **Dent Matthew**, Orlean, IN (US); **Gerry Miller**, Bedford, IN (US)

(73) Assignee: **The United States of America as represented by the Secretary of the Navy**, Washington, DC (US)

(*) Notice: Subject to any disclaimer, the term of this patent is extended or adjusted under 35 U.S.C. 154(b) by 907 days.

(21) Appl. No.: **12/172,216**

(22) Filed: **Jul. 12, 2008**

(51) **Int. Cl.**
H01Q 17/00 (2006.01)

(52) **U.S. Cl.** **342/1**; 342/4

(58) **Field of Classification Search** 342/1–4
See application file for complete search history.

(56) **References Cited**

U.S. PATENT DOCUMENTS

2,996,709	A	8/1961	Pratt	
2,996,710	A	9/1961	Pratt	
3,754,255	A	8/1973	Suetake	
3,836,967	A	9/1974	Wright	
4,173,018	A	10/1979	Dawson	
4,833,485	A	5/1989	Morgan	
4,924,228	A	5/1990	Novak	
5,128,678	A	7/1992	Novak	
5,173,699	A	12/1992	Barr	
5,276,447	A	1/1994	Shingo	
5,436,630	A	7/1995	Nash	
5,717,397	A	2/1998	Ruszkowski, Jr.	
6,060,411	A	5/2000	Cline	
6,456,224	B1 *	9/2002	Cobb et al.	342/2
6,661,368	B1 *	12/2003	Allen et al.	342/25 R
6,771,205	B1 *	8/2004	Barton et al.	342/13
7,170,467	B1	1/2007	Town	
7,205,928	B1 *	4/2007	Sweet	342/26 B
7,834,799	B1 *	11/2010	Wells	342/1
2004/0112403	A1 *	6/2004	Lewis et al.	134/1
2004/0233116	A1 *	11/2004	Desargant et al.	343/757
2007/0107370	A1 *	5/2007	Douglas	52/741.3
2008/0007444	A1 *	1/2008	Martinson et al.	342/20

* cited by examiner

Primary Examiner — Timothy A Brainard
(74) *Attorney, Agent, or Firm* — Christopher A. Monsey

(57) **ABSTRACT**

An instrumentation structure includes a sensor array and a support structure. The sensor array is rotatable around multiple axes. Radar absorbent material (RAM) is adapted to conform to non-planar exterior surfaces of the instrumentation structure.

49 Claims, 7 Drawing Sheets

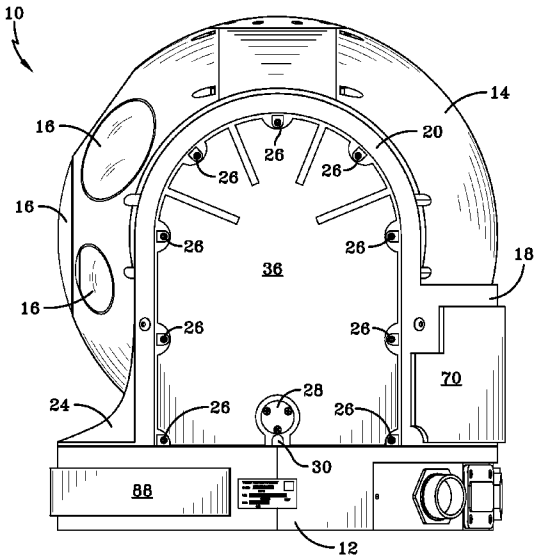

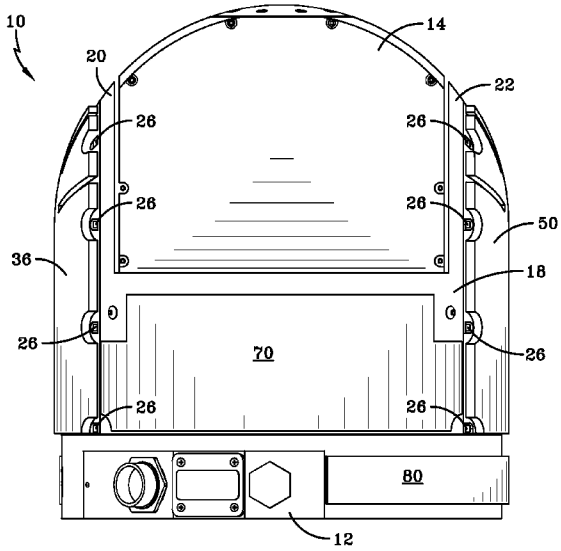

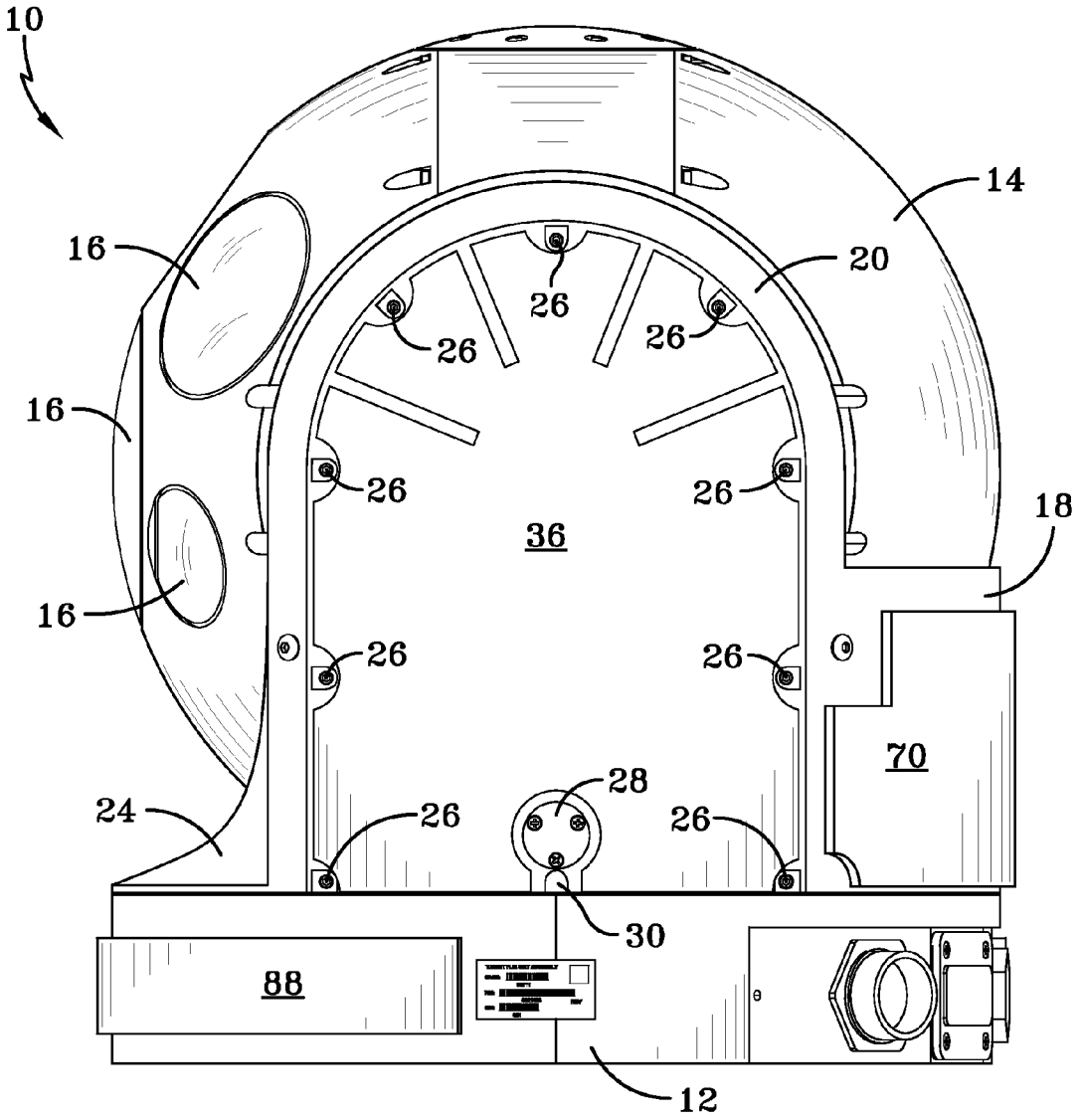

FIG–1A

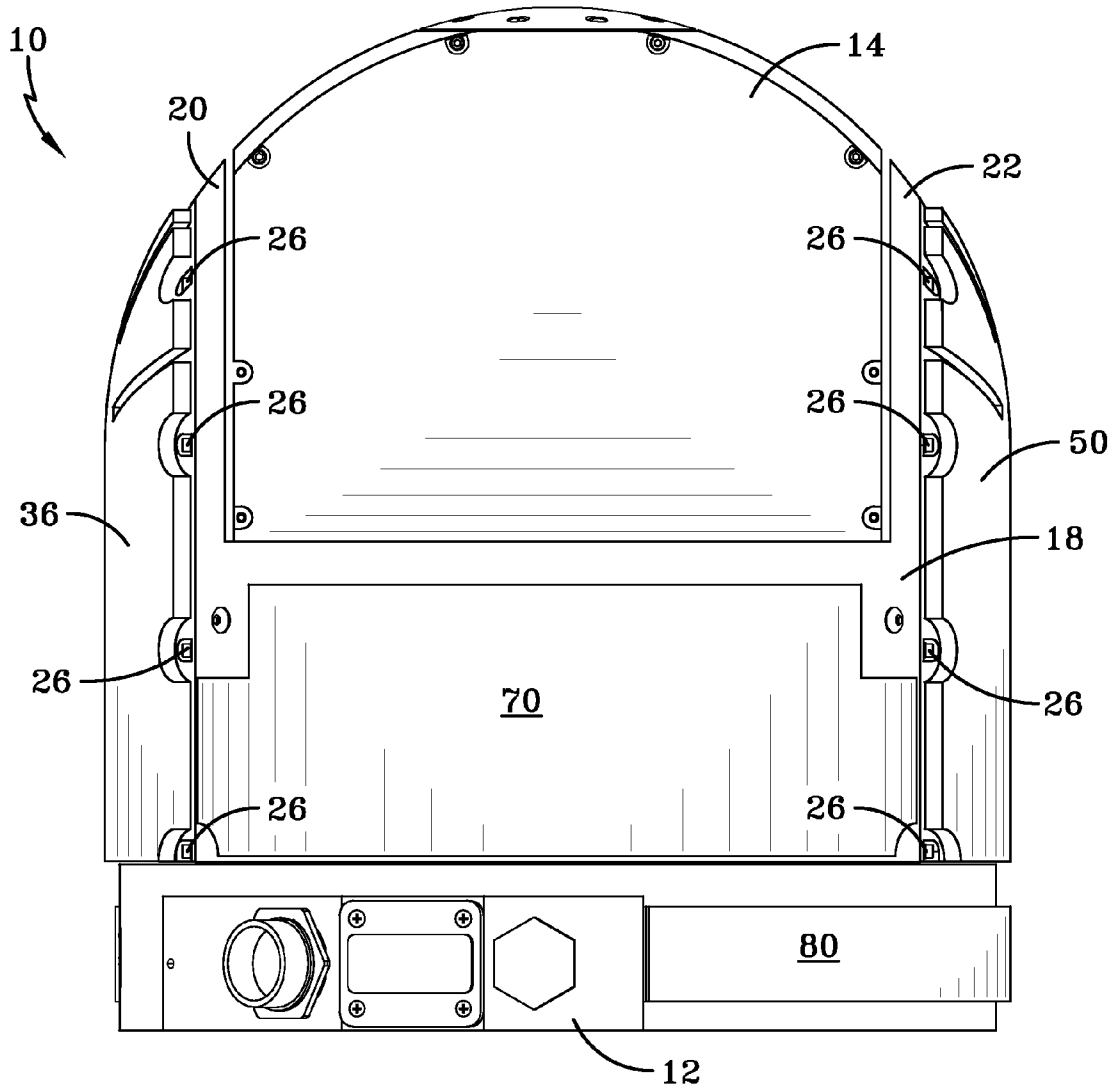

FIG-1B

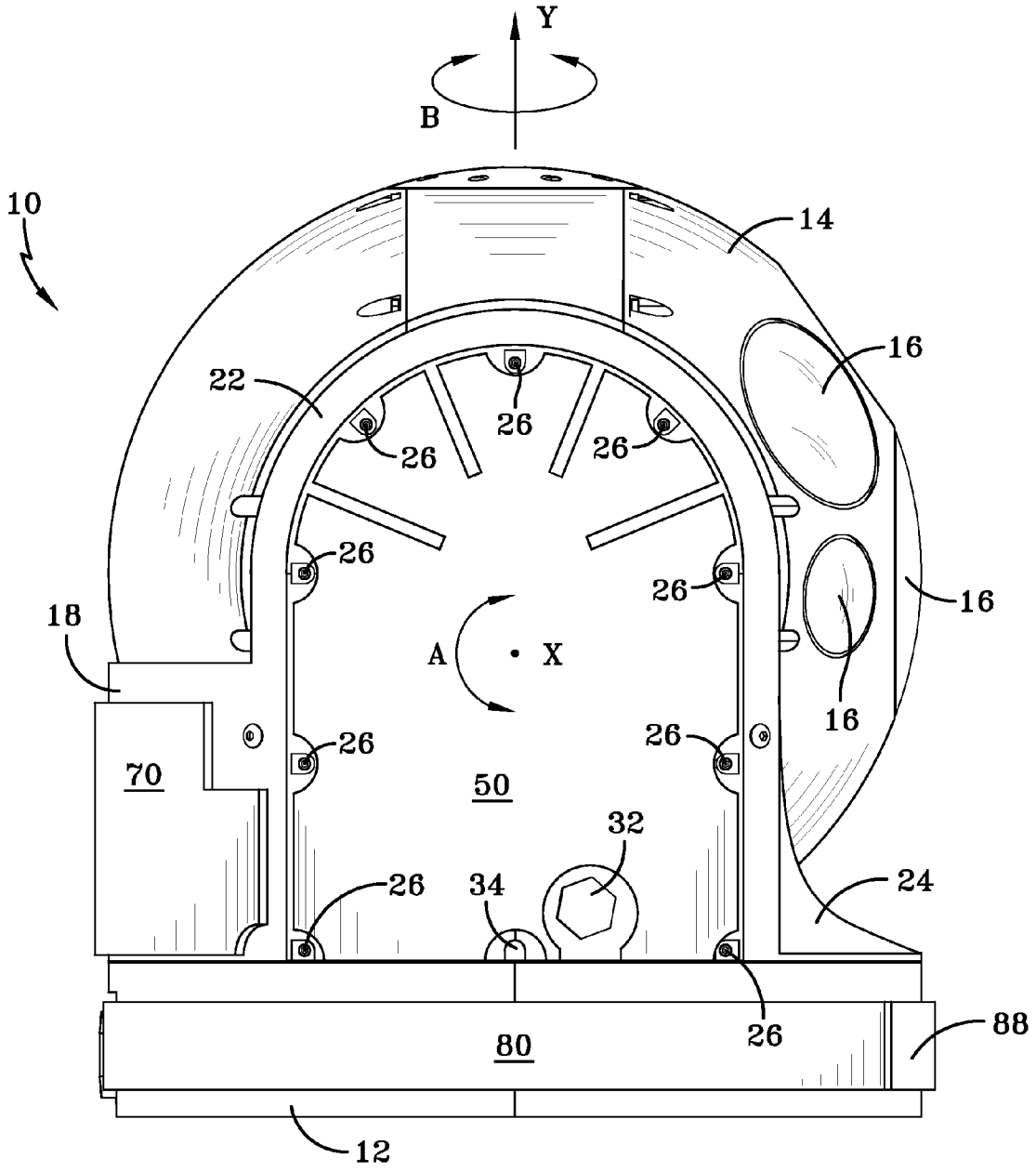
Y
B
10
14
16
22
26
26
26
26
26
16
18
A
X
16
26
26
70
50
32
26
34
24
26
88
80
12

FIG–1C

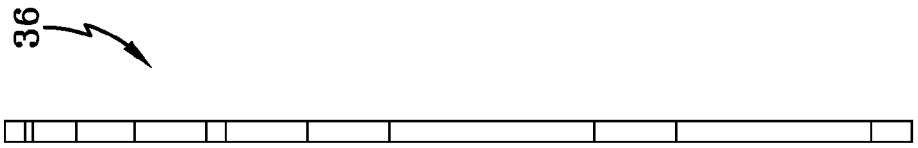

FIG-2B

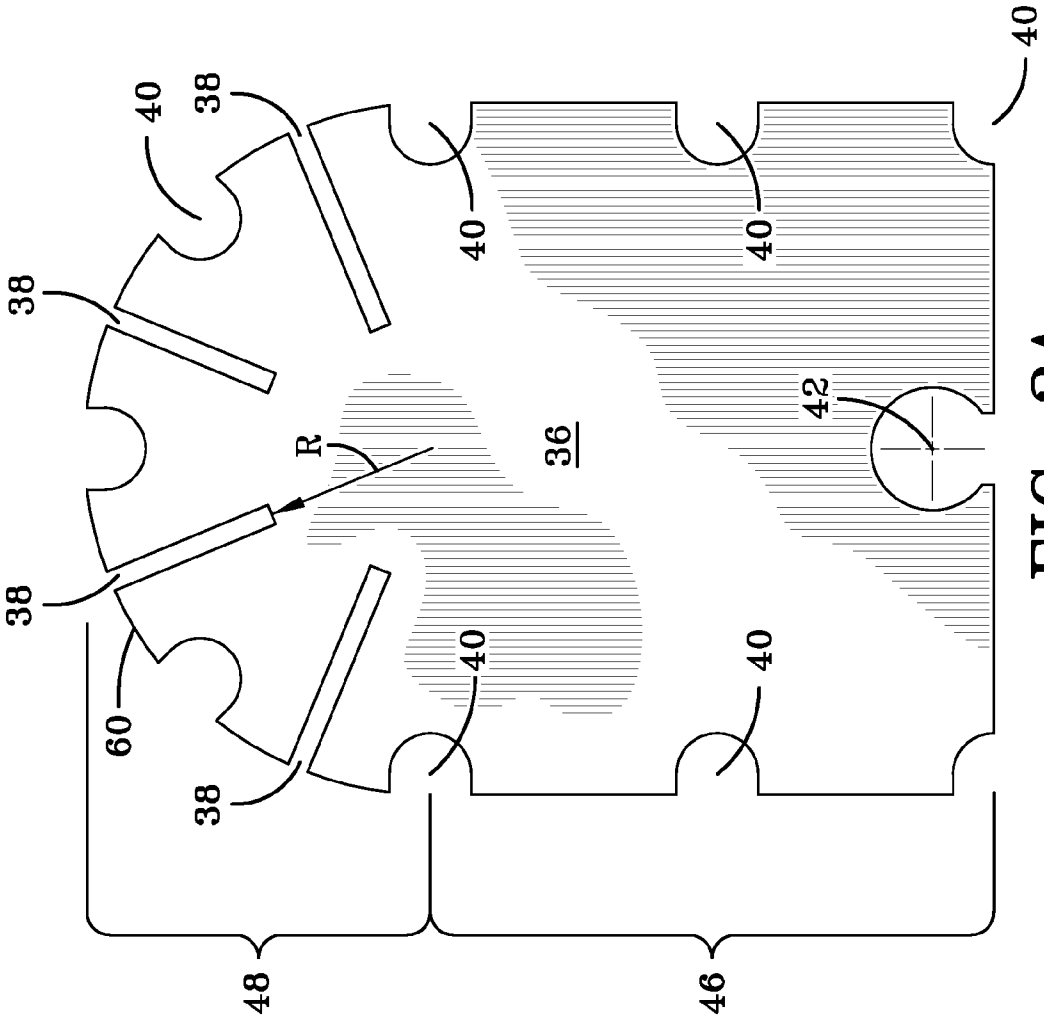

FIG-2A

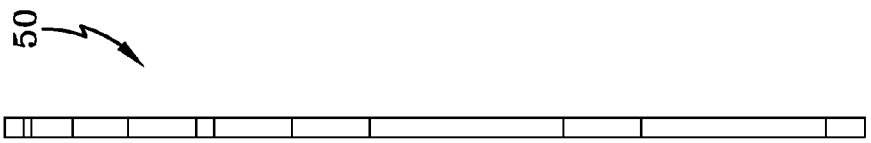

FIG-3B

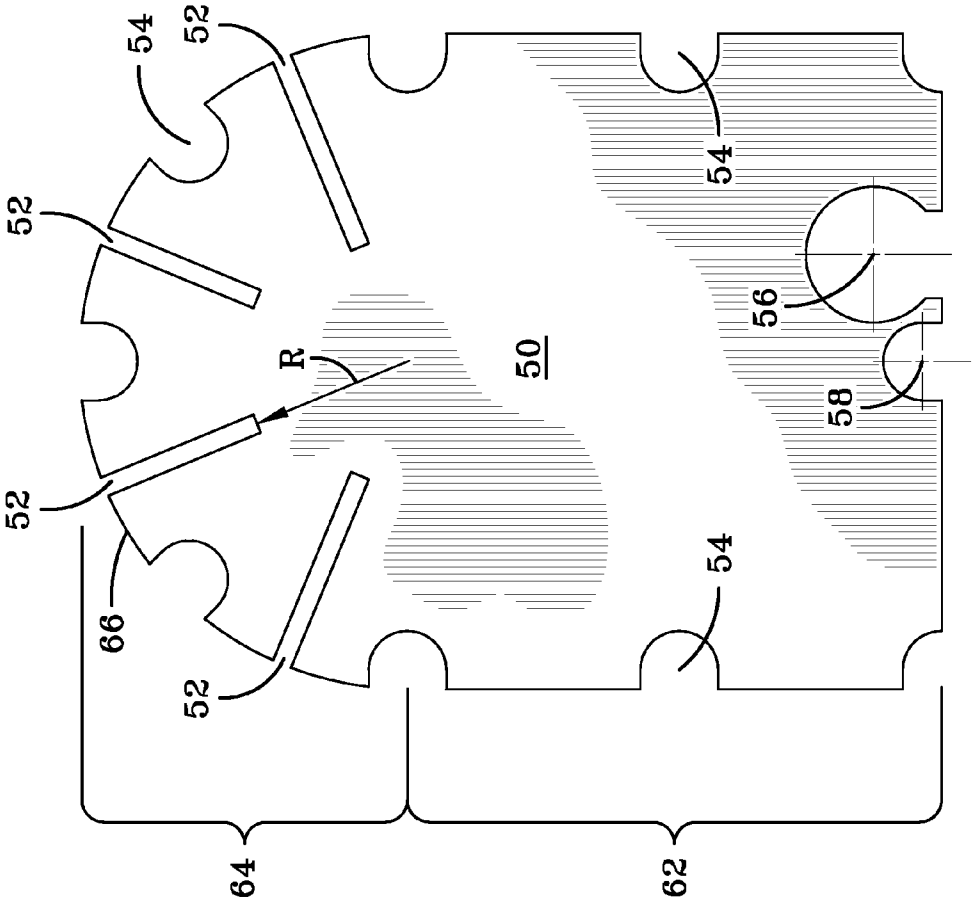

FIG-3A

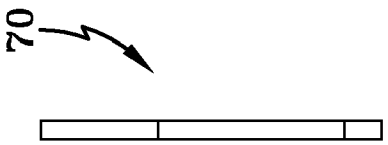

FIG-4B

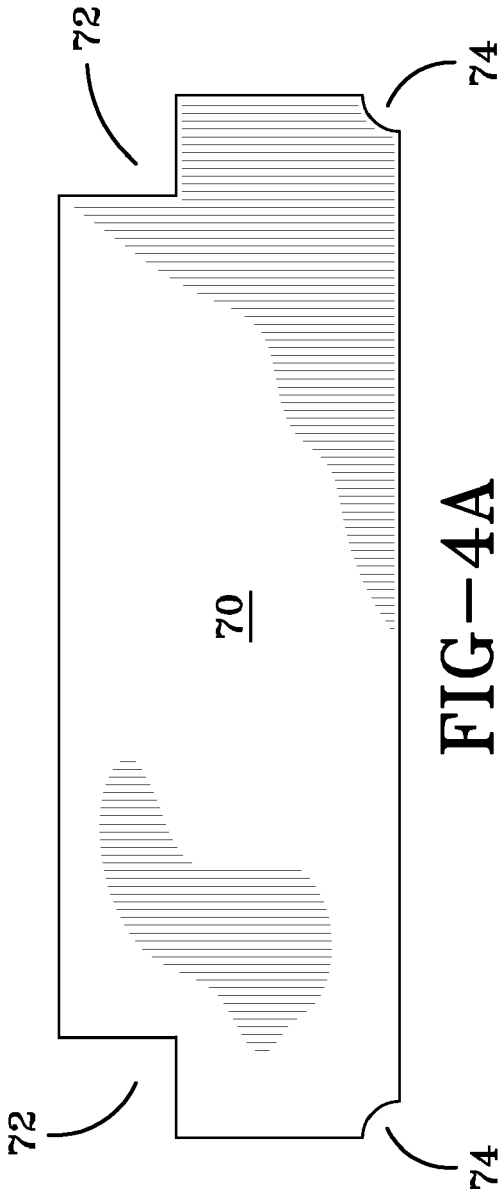

FIG-4A

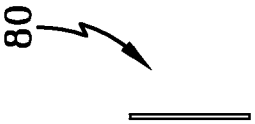

FIG-5B

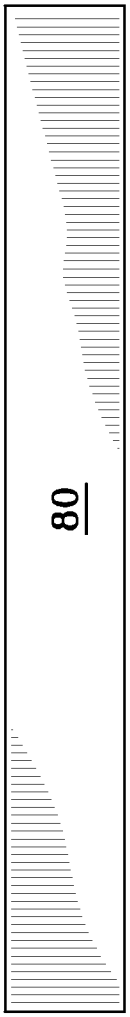

FIG-5A

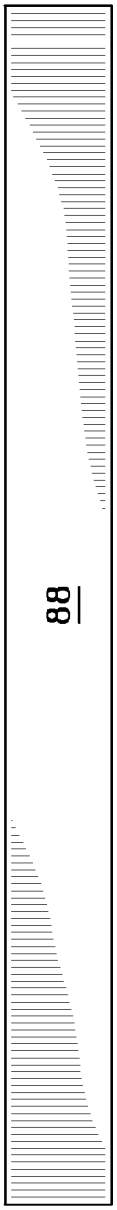

FIG-6A

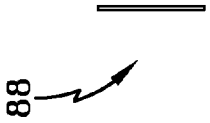

FIG-6B

FIG-8

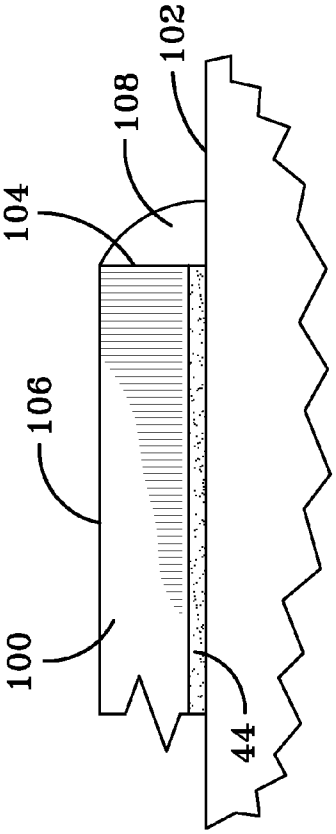

FIG-7

INSTRUMENTATION STRUCTURE WITH REDUCED ELECTROMAGNETIC RADIATION REFLECTIVITY OR INTERFERENCE CHARACTERISTICS

STATEMENT REGARDING FEDERALLY SPONSORED RESEARCH OR DEVELOPMENT

The invention described herein was made in the performance of official duties by employees of the Department of the Navy and may be manufactured, used, licensed by or for the United States Government for any governmental purpose without payment of any royalties thereon.

BACKGROUND OF THE INVENTION

The invention relates to instrumentation structures with reduced electromagnetic radiation interference and interference characteristics.

Instrumentation structures may house sensors, such as optical devices. The optical devices may include, for example, infrared cameras, visible light cameras, laser range finders, etc. A instrumentation structure in accordance with the invention may used in a variety of settings including, for example, security systems, aircraft, watercraft, land vehicles, and stationary structures. The user may be, for example, a commercial, governmental, or private entity. The user may desire that the instrumentation structure be compatible with airborne or ground based radar or other electromagnetic radiation transmitters or receivers. Significant advantages are associated with enabling use of instrument systems which mitigate signal returns from the instrumentation structure or interference with radio frequency systems or system operators which receive undesirable radar returns off the instrumentation structure. For example, an instrumentation structure in accordance with the invention can reduce clutter or interference on an air traffic control system which could distract an air traffic controller in controlling aircraft viewed on a radar screen.

SUMMARY OF THE INVENTION

One aspect of the invention is an instrumentation structure having radar absorbent material (RAM) fixed thereon.

BRIEF DESCRIPTION OF THE DRAWING

In the drawings, which are not necessarily to scale, like or corresponding parts are denoted by like or corresponding reference numerals.

FIGS. **1**A, **1**B, and **1**C are elevations views of one embodiment of an instrumentation structure in accordance with the invention.

FIGS. **2**A and **2**B are front and side elevation views, respectively, of a first piece of RAM.

FIGS. **3**A and **3**B are front and side elevation views, respectively, of a second piece of RAM.

FIGS. **4**A and **4**B are front and side elevation views, respectively, of a third piece of RAM.

FIGS. **5**A and **5**B are front and side elevation views, respectively, of a fourth piece of RAM.

FIGS. **6**A and **6**B are front and side elevation views, respectively, of a fifth piece of RAM.

FIG. **7** is a sectional view of an exemplary RAM installation.

FIG. **8** is a schematic drawing of a water jet cutter.

DETAILED DESCRIPTION OF THE PREFERRED EMBODIMENTS

FIGS. **1**A, **1**B, and **1**C are elevations views of one embodiment of an instrumentation structure **10** in accordance with the invention. Instrumentation structure **10** may include a rotatable sensor array and a supporting structure. It should be noted that a variety of devices may be installed in ball **14** such as laser systems or other non-sensor systems. In FIGS. **1**A-C, the rotatable sensor array may comprise a generally spherical ball **14** having one or more lenses **16**. Ball **14** may be rotatable **360** degrees around the axis X (FIG. **1**C) as shown by arrow A. Ball **14** may also be 360 degrees rotatable around axis Y (FIG. **1**C). Axis Y may be perpendicular to axis X.

Supporting structure for instrumentation structure **10** may include a base **12** and a tilt support structure. The tilt support structure may be stationary with respect to rotation of the ball **14** around the X-axis and may rotate with the ball **14** with respect to rotation around the Y-axis. The tilt support structure may include a throat **24** (FIGS. **1**A and **1**C), a neck **18** (FIG. **1**B), and a pair of opposing ears **20**, **22** (FIG. **1**B) connecting the throat **24** and neck **18**. In other words, the throat **24**, neck **18** and ears **20**, **22** comprise front, back and side sections of the tilt support structure which mount the ball **14**. It should be noted that the term "ears" refers to side mounts for the ball **14** structure. Exterior surfaces of the ears **20**, **22** may be non-planar. In particular, portions of the exterior surfaces of the ears **20**, **22** may be convex.

RAM may be fixed to exterior surfaces of the instrumentation structure **10**. RAM **36** (FIG. **2**A) and RAM **50** (FIG. **3**A) may be fixed to exterior surfaces of the ears **20**, **22**, respectively. The RAM **36** (FIGS. **2**A and **2**B) may include a generally rectangular portion **46** and a generally semi-circular portion **48**. Semi-circular portion **48** may include one or more slots **38** formed therein such that the RAM **36** substantially conforms to the non-planar exterior surfaces of the ear **20**. Slots **38** may extend from a peripheral edge **60** of the RAM **36** inwardly along a radius R of semi-circular portion **48**. Edges of the RAM **36** within the slots **38** may be caulked. RAM **36** may include notches **40** formed therein to allow access to, for example, fasteners **26** (FIGS. **1**A-**1**C). RAM **36** may include one or more openings **42** for access to, for example, a desiccant cartridge cover **28** and an air access **30** (FIG. **1**A).

The RAM **50** (FIGS. **3**A and **3**B) may include a generally rectangular portion **62** and a generally semi-circular portion **64**. Semi-circular portion **64** may include one or more slots **52** formed therein such that the RAM **50** substantially conforms to the non-planar exterior surfaces of the ear **22**. Slots **52** may extend from a peripheral edge **66** of the RAM **50** inwardly along a radius R of semi-circular portion **64**. Edges of the RAM **50** within the slots **52** may be caulked. RAM **50** may include notches **54** formed therein to allow access to, for example, fasteners **26** (FIGS. **1**A-**1**C). RAM **50** may include one or more openings **56**, **58** for access to, for example, a nitrogen input **32** and nitrogen exhaust **34** (FIG. **1**C).

RAM **70** (FIG. **4**A) may be fixed to the neck **18** (FIG. **1**B) of instrumentation structure **10**. RAM **70** may be substantially rectangular. RAM **70** may include one or more substantially rectangular notches **72**, or substantially circular notches **74**, for access to fasteners or internal components of the instrumentation structure **10**.

RAM **80** (FIG. **5**A) and RAM **88** (FIG. **6**A) may be fixed to the base **12** (FIGS. **1**A-**1**C) of instrumentation structure **10**. RAM **80** and RAM **88** may comprise substantially rectangular shapes.

Generally, the base **12** of instrumentation structure **10** is fixed to a mounting structure and the ball **14** and ears **20**, **22** depend downwardly from the base **12**. In this orientation, the base **12** may have a lesser radar cross-section than the remainder of the instrumentation structure **10**. Thus, a thickness of the RAM **80**, **88** fixed to base **12** may be less than a thickness of the RAM **36**, **50**, **70** fixed to ears **20**, **22** and neck **18**. In one embodiment, a thickness of the RAM **80**, **88** is about 0.06 inches and a thickness of the RAM **36**, **50**, **70** is about 0.25 inches.

FIG. **7** is a sectional view of an exemplary RAM **100** installed on a surface **102** of the instrumentation structure **10**. The RAM **100** may comprise a closed cell synthetic rubber, such as neoprene. The RAM **100** may include an adhesive backing **44**. Edges **104** of the RAM **100** may be substantially perpendicular to the surface **102** of the RAM **100**. Caulk **108** may be applied along the edges **104** of the RAM **100**.

RAM may be supplied in generally rectangular sheets. The processes of shaping the RAM, forming slots in the RAM, forming notches in the RAM, forming openings in the RAM, etc., may be performed using a water jet cutter **120** (FIG. **8**). Ideally, when applying the RAM, one should use the thickest RAM possible. The amount of potential radar absorption is directly proportional to the thickness of the material. The natural state of the RAM is flat. When applied to curved surfaces, the RAM tends to crease. Thinner RAM is easier to fit over a more extremely curved surface.

Alternative embodiments may employ a radar absorbing coating for the ball **14** or other portions of the instrumentation structure which RAM layers are not applied to. Radar absorbing coatings can be composed of vinyl latex paint and carbon nanotube filaments. Finely ground Mylar and neoprene can be added during mixing of the coating. Adding ground carbon to the paint mixture can provide good coverage and results. Some types of electromagnetic energy can be influenced by increasing or reducing the thickness of the coating. Surface preparation is important to prevent delamination or peeling.

RAM sealant or caulking material may have the same carbon nanotube filaments in a vinyl latex caulk base. This thickened substance can contain a finely ground carbon, Mylar and neoprene mix added as a last step before application. Surface preparation again is very important to prevent delamination, pealing or flaking A two part applicator can be used to apply a multi-layered sealant or caulking material but care must be taken to apply the carbon, Mylar and neoprene mix side of the applicator to the metal surface.

References to caulk, caulking material or sealant should be understood to be examples of different methods, design features or structures for use in creating seal or edge terminations or transitions for the RAM materials to the surface which a RAM material is applied to. References to caulk, caulking materials or sealants should be understood to also include a termination or transition structure which is designed as a part of the RAM material edge areas. Thus, caulk, caulking material or structure references should be understood to be a reference to a transition or seam design feature of the RAM or structures which are formed into the RAM seams or edges or access holes or areas through the RAM itself.

While the invention has been described with reference to certain preferred embodiments, numerous changes, alterations, and modifications to the described embodiments are possible without departing from the spirit and scope of the invention as defined in the appended claims, and equivalents thereof.

What is claimed is:

1. An apparatus, comprising:

an instrumentation structure including a sensor array and a supporting structure, the sensor array having multi-axis rotatability; and

RAM applied to at least one or more exterior surfaces of the instrumentation structure and adapted to reduce electromagnetic radiation reflectivity or detection characteristics including radar visibility of the instrumentation structure, the exterior surfaces of the instrumentation structure including non-planar surfaces and fasteners wherein the RAM is adapted to conform to curvatures of the non-planar surfaces and allow access to the fasteners such that said RAM maintains an approximate smooth surface in areas where said RAM is conformed to said non-planar surfaces;

wherein the supporting structure includes a base, and a tilt support structure that is stationary with respect to rotation of the sensor array around a first axis, and rotates with the sensor array with respect to rotation around a second axis that is perpendicular to the first axis, the RAM being fixed to exterior surfaces of the tilt support structure;

wherein the tilt support structure includes a throat, a neck, and a pair of opposing ears connecting the throat and neck, the RAM being fixed to exterior surfaces of the ears.

2. The apparatus of claim **1**, wherein the RAM material has a first and second thickness, said RAM having said first thickness is applied on one part of the instrumentation structure and said RAM having said second thickness is applied on another part of the instrumentation structure.

3. The apparatus of claim **2**, wherein said RAM has a third tapering thickness around service access portions, instrumentation portions and fastener portions of said instrumentation structure.

4. The apparatus of claim **1**, wherein a RAM coating is applied to at least one or more areas of said instrumentation structure which does not have said RAM applied thereto.

5. The apparatus of claim **1**, wherein a sealing material is applied to at least one or more edge portions of said RAM, said edge portions may include seams in said RAM or discontinuous edges of said RAM material which do not abut another edge of said RAM.

6. The apparatus of claim **5**, wherein said sealing material comprises a multi-layered caulking material which is adapted to be dispensed in a semi-liquid form such that it smoothly conforms to edges of said RAM material and seals edges or seams of said RAM such that said edges or seams are sealed against water or wind slip stream intrusion.

7. The apparatus of claim **6**, wherein said multi-layered caulking material has electromagnetic radiation absorptive or deflecting characteristics.

8. The apparatus of claim **1**, wherein said RAM thickness is selected based on a plurality of characteristics of said RAM including surface contours of said instrumentation structure including curvature of said instrumentation structure and flexibility of said RAM.

9. The apparatus of claim **1**, wherein said RAM comprises a sheet of RAM material wherein one side of said RAM material conformed to at least one portion of said curvatures of said non-planar surfaces comprises one or more slots where RAM material has been removed, said RAM material at said slots are pressed together to conform said RAM material to at least a portion of said curvatures of said non-planar surfaces.

10. The apparatus of claim **1**, wherein the RAM comprises a closed cell synthetic rubber.

11. The apparatus of claim **10**, wherein the RAM includes an adhesive backing.

12. The apparatus of claim **11**, wherein edges of the RAM are substantially perpendicular to surfaces of the RAM.

13. The apparatus of claim **12** further comprising caulk disposed along edges of the RAM.

14. The apparatus of claim **1**, wherein the exterior surfaces of the ears are non-planar and the RAM fixed thereon includes a generally rectangular portion and a generally semi-circular portion.

15. The apparatus of claim **14**, wherein the exterior surfaces of the ears include convex portions and the generally semi-circular portion of the RAM includes slots formed therein such that the semi-circular portion of the RAM substantially conforms to the convex portion of the exterior surface of the ear.

16. The apparatus of claim **15**, wherein the slots extend from a periphery of the semi-circular portion inwardly along radii of the semi-circular portion.

17. The apparatus of claim **1**, wherein the exterior surfaces of the ears include fasteners and the RAM fixed thereon includes notches formed therein at fastener locations.

18. The apparatus of claim **1**, wherein the ears include access openings and the RAM fixed thereon includes openings formed therein at access opening locations.

19. The apparatus of claim **1**, wherein the RAM that is fixed to exterior surface of the ears comprises one piece of RAM for each ear.

20. The apparatus of claim **1**, wherein the RAM is fixed to the neck.

21. The apparatus of claim **20**, wherein the RAM that is fixed to the neck is a substantially rectangular piece that includes notches formed therein.

22. The apparatus of claim **1**,

wherein the RAM is fixed to the base.

23. An apparatus, comprising:

an instrumentation structure including a sensor array and a supporting structure, the sensor array having multi-axis rotatability; and

RAM applied to at least one or more exterior surfaces of the instrumentation structure and adapted to reduce electromagnetic radiation reflectivity or detection characteristics including radar visibility of the instrumentation structure, the exterior surfaces of the instrumentation structure including non-planar surfaces and fasteners wherein the RAM is adapted to conform to curvatures of the non-planar surfaces and allow access to the fasteners such that said RAM maintains an approximate smooth surface in areas where said RAM is conformed to said non-planar surfaces;

wherein the supporting structure includes a base and the RAM is fixed to the base;

wherein the RAM that is fixed to the base comprises two substantially rectangular pieces of RAM.

24. An apparatus, comprising:

an instrumentation structure including a sensor array and a supporting structure, the sensor array having multi-axis rotatability; and

RAM applied to at least one or more exterior surfaces of the instrumentation structure and adapted to reduce electromagnetic radiation reflectivity or detection characteristics including radar visibility of the instrumentation structure, the exterior surfaces of the instrumentation structure including non-planar surfaces and fasteners wherein the RAM is adapted to conform to curvatures of the non-planar surfaces and allow access to the fasteners such that said RAM maintains an approximate smooth surface in areas where said RAM is conformed to said non-planar surfaces; wherein the supporting structure includes a base, and a tilt support structure that is stationary with respect to rotation of the sensor array around a first axis, and rotates with the sensor array with respect to rotation around a second axis that is perpendicular to the first axis, the RAM being fixed to exterior surfaces of the tilt support structure;

wherein the tilt support structure includes a throat, a neck, and a pair of opposing ears connecting the throat and neck;

wherein the RAM includes RAM fixed to the ears, RAM fixed to the neck, and RAM fixed to the base, the RAM fixed to the ears and the neck being thicker than the RAM fixed to the base.

25. The apparatus of claim **24** wherein a thickness of the RAM fixed to the ears and neck is about 0.25 inches and a thickness of the RAM fixed to the base is about 0.06 inches.

26. A method, comprising:

providing an instrumentation structure including a sensor array and a support structure, the sensor array having multi-axis rotatability; and

fixing RAM to at least one or more exterior surfaces of the instrumentation structure and adapted to reduce electromagnetic radiation reflectivity or detection characteristics including radar visibility of the instrumentation structure, the exterior surfaces of the instrumentation structure including non-planar surfaces and fasteners wherein the RAM is adapted to conform to curvatures of the non-planar surfaces and allow access to the fasteners such that said RAM maintains an approximate smooth surface in areas where said RAM is conformed to said non-planar surfaces;

wherein providing the instrumentation structure includes providing an instrumentation structure having a tilt support structure that is stationary with respect to rotation of the sensor array around a first axis, and rotates with the sensor array with respect to rotation around a second axis that is perpendicular to the first axis;

wherein providing a tilt support structure includes providing a tilt support structure having a throat, a neck and a pair of opposing ears connecting the throat and neck;

wherein fixing RAM includes fixing RAM to exterior surfaces of the ears.

27. The method of claim **26**, wherein fixing RAM includes fixing RAM having a first and second thickness, said RAM having said first thickness is applied on one part of the instrumentation structure and said RAM having said second thickness is applied on another part of the instrumentation structure.

28. The method of claim **27**, wherein fixing RAM includes fixing RAM having a third tapering thickness around service access portions, instrumentation portions and fastener portions of said instrumentation structure.

29. The method of claim **26**, further comprising applying a RAM coating to at least one or more areas of said instrumentation structure which does not have said RAM applied thereto.

30. The method of claim **26**, further comprising applying a sealing material to at least one or more edge portions of said RAM, said edge portions may include seams in said RAM or discontinuous edges of said RAM material which do not abut another edge of said RAM.

31. The method of claim **30**, wherein applying said sealing material includes applying sealing material comprising a

multi-layered caulking material which is adapted to be dispensed in a semi-liquid form such that it smoothly conforms to edges of said RAM material and seals edges or seams of said RAM such that said edges or seams are sealed against water or wind slip stream intrusion.

32. The method of claim **31**, wherein said multi-layered caulking material has electromagnetic radiation absorptive or deflecting characteristics.

33. The method of claim **26**, wherein said RAM thickness is selected based on a plurality of characteristics of said RAM including surface contours of said instrumentation structure including curvature of said instrumentation structure and flexibility of said RAM.

34. The method of claim **26**, wherein said RAM comprises a sheet of RAM material wherein one side of said RAM material conformed to at least one portion of said curvatures of said non-planar surfaces comprises one or more slots where RAM material has been removed, said RAM material at said slots are pressed together to conform said RAM material to at least a portion of said curvatures of said non-planar surfaces.

35. The method of claim **26**, further comprising applying caulk along edges of the RAM.

36. The method of claim **26**, wherein fixing RAM includes fixing RAM comprising a closed cell synthetic rubber.

37. The method of claim **26**, wherein fixing RAM includes fixing RAM having an adhesive backing.

38. The method of claim **26**, wherein fixing RAM includes providing RAM in sheets and then cutting the RAM using a water jet.

39. The method of claim **26**, wherein fixing RAM includes fixing RAM to exterior surfaces of the tilt support structure.

40. The method of claim **26**, wherein providing a tilt support structure includes providing a tilt support structure wherein the exterior surfaces of the ears are non-planar.

41. The method of claim **26**, wherein providing a tilt support structure includes providing a tilt support structure wherein the ears include fasteners.

42. The method of claim **41**, wherein fixing RAM includes forming notches in the RAM at fastener locations.

43. The method of claim **26**, wherein fixing RAM includes fixing RAM to a base of the support structure.

44. The method of claim **43** wherein fixing RAM to the base includes fixing two substantially rectangular pieces of RAM to the base.

45. A method, comprising:

providing an instrumentation structure including a sensor array and a support structure, the sensor array having multi-axis rotatability; and

fixing RAM to at least one or more exterior surfaces of the instrumentation structure and adapted to reduce electromagnetic radiation reflectivity or detection characteristics including radar visibility of the instrumentation structure, the exterior surfaces of the instrumentation structure including non-planar surfaces and fasteners wherein the RAM is adapted to conform to curvatures of the non-planar surfaces and allow access to the fasteners such that said RAM maintains an approximate smooth surface in areas where said RAM is conformed to said non-planar surfaces; wherein providing the instrumentation structure includes providing an instrumentation structure having a tilt support structure that is stationary with respect to rotation of the sensor array around a first axis, and rotates with the sensor array with respect to rotation around a second axis that is perpendicular to the first axis;

wherein providing a tilt support structure includes providing a tilt support structure;

wherein fixing RAM includes providing RAM comprising a generally rectangular portion and a generally semi-circular portion and forming slots in the RAM such that the RAM substantially conforms to the non-planar exterior surfaces.

46. The method of claim **45**, wherein the non-planar exterior surfaces are convex and fixing RAM includes forming slots that extend from a periphery of the RAM inwardly along radii of the semi-circular portion of the RAM.

47. A method, comprising:

providing an instrumentation structure including a sensor array and a support structure, the sensor array having multi-axis rotatability; and

fixing RAM to at least one or more exterior surfaces of the instrumentation structure and adapted to reduce electromagnetic radiation reflectivity or detection characteristics including radar visibility of the instrumentation structure, the exterior surfaces of the instrumentation structure including non-planar surfaces and fasteners wherein the RAM is adapted to conform to curvatures of the non-planar surfaces and allow access to the fasteners such that said RAM maintains an approximate smooth surface in areas where said RAM is conformed to said non-planar surfaces;

wherein providing the instrumentation structure includes providing an instrumentation structure having a tilt support structure that is stationary with respect to rotation of the sensor array around a first axis, and rotates with the sensor array with respect to rotation around a second axis that is perpendicular to the first axis;

wherein providing a tilt support structure includes providing a tilt support structure having a throat, a neck and a pair of opposing ears connecting the throat and neck;

wherein fixing RAM includes fixing one piece of RAM to each ear.

48. A method, comprising:

providing an instrumentation structure including a sensor array and a support structure, the sensor array having multi-axis rotatability; and

fixing RAM to at least one or more exterior surfaces of the instrumentation structure and adapted to reduce electromagnetic radiation reflectivity or detection characteristics including radar visibility of the instrumentation structure, the exterior surfaces of the instrumentation structure including non-planar surfaces and fasteners wherein the RAM is adapted to conform to curvatures of the non-planar surfaces and allow access to the fasteners such that said RAM maintains an approximate smooth surface in areas where said RAM is conformed to said non-planar surfaces;

wherein providing the instrumentation structure includes providing an instrumentation structure having a tilt support structure that is stationary with respect to rotation of the sensor array around a first axis, and rotates with the sensor array with respect to rotation around a second axis that is perpendicular to the first axis;

wherein providing a tilt support structure includes providing a tilt support structure having a throat, a neck and a pair of opposing ears connecting the throat and neck;

wherein fixing RAM includes fixing RAM to the neck.

49. The method of claim **48**, wherein fixing RAM to the neck includes forming notches in a substantially rectangular piece of RAM.

* * * * *