US008297626B2

(12) **United States Patent**
Schaefer et al.

(10) **Patent No.: US 8,297,626 B2**
(45) **Date of Patent: Oct. 30, 2012**

(54) **PRESSURE SEAL**

(75) Inventors: **Alan R. Schaefer**, Bloomington, IN (US); **Daniel Neff**, Jasper, IN (US); **Donald P. Luse**, Bloomfield, IN (US)

(73) Assignee: **The United States of America as represented by the Secretary of the Navy**, Washington, DC (US)

(*) Notice: Subject to any disclaimer, the term of this patent is extended or adjusted under 35 U.S.C. 154(b) by 119 days.

(21) Appl. No.: **12/603,697**

(22) Filed: **Oct. 22, 2009**

(65) **Prior Publication Data**

US 2011/0024995 A1 Feb. 3, 2011

Related U.S. Application Data

(63) Continuation of application No. 12/533,760, filed on Jul. 31, 2009.

(51) **Int. Cl.**
F16J 15/02 (2006.01)

(52) **U.S. Cl.** **277/648**; 102/469

(58) **Field of Classification Search** 102/469, 102/470, 472; 277/644, 647, 624, 626, 602, 277/615, 604, 609, 568, 574, 606, 608, 616, 277/627, 560, 562, 586, 584, 530, 566, 567
See application file for complete search history.

(56) **References Cited**

U.S. PATENT DOCUMENTS

740,790 A * 10/1903 Young et al. 102/470
2,081,040 A 5/1937 King
2,230,725 A * 2/1941 Nathan 277/624
2,259,453 A * 10/1941 Beyer et al. 277/626
2,272,811 A * 2/1942 Nathan 277/626
2,830,858 A * 4/1958 Moorman et al. 384/484
2,907,596 A * 10/1959 Maha 277/566
3,020,054 A * 2/1962 Driancourt 277/626
3,081,102 A * 3/1963 Murray et al. 277/607
3,215,077 A * 11/1965 Mayer et al. 102/469
3,279,806 A * 10/1966 Bialkowski 277/647
3,573,871 A * 4/1971 Warner 277/607
3,576,329 A * 4/1971 Weaver 277/616
3,590,740 A * 7/1971 Herter 102/466
3,720,418 A * 3/1973 Berg 277/551
3,722,412 A * 3/1973 Herter 102/466
3,805,702 A 4/1974 Voss et al.
4,020,763 A * 5/1977 Iruretagoyena 102/469
4,108,447 A * 8/1978 Scholin 277/553
4,132,421 A * 1/1979 Corsi et al. 277/565
4,202,270 A * 5/1980 Luther et al. 102/464
4,353,304 A * 10/1982 Hubsch et al. 102/470
4,371,177 A * 2/1983 Bahr et al. 277/560
4,404,912 A * 9/1983 Sindermann 102/505
4,417,503 A * 11/1983 Izumi 277/436
4,529,211 A * 7/1985 Rodgers 277/626
4,646,644 A * 3/1987 Richmond et al. 102/530
4,682,545 A * 7/1987 Jett, Jr. 102/430
4,738,202 A 4/1988 Hebert

(Continued)

FOREIGN PATENT DOCUMENTS

EP 14906 A1 * 9/1980

(Continued)

Primary Examiner — Jonathan C Weber
(74) *Attorney, Agent, or Firm* — Christopher A. Monsey

(57) **ABSTRACT**

A seal is provided that restricts movement of adjacent parts when in a high pressure environment while allowing relative movement of adjacent parts when in non-high pressure environment.

13 Claims, 5 Drawing Sheets

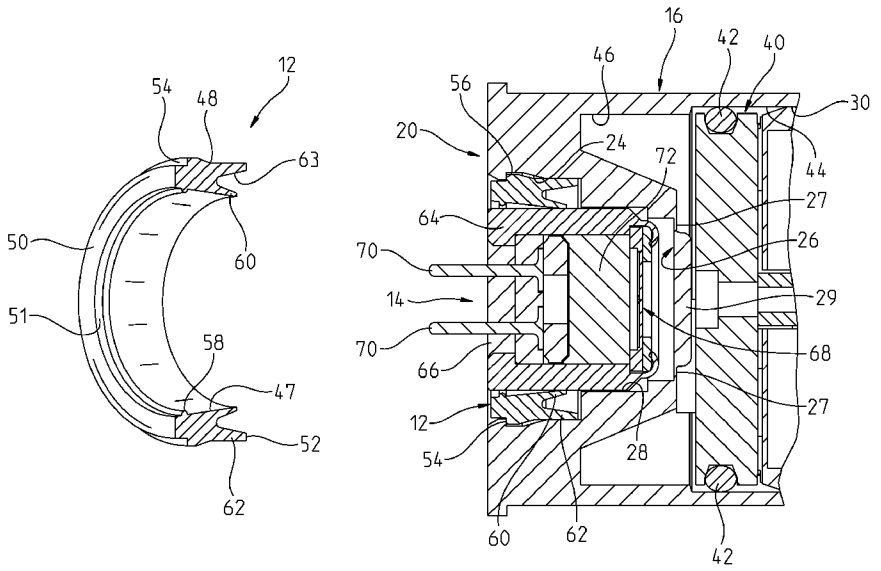

U.S. PATENT DOCUMENTS

4,770,099	A	*	9/1988	Brede et al.	102/472
4,867,066	A	*	9/1989	Buenemann, Jr.	102/470
4,938,146	A	*	7/1990	Gunther et al.	102/439
5,063,853	A	*	11/1991	Bilgeri	102/467
5,083,128	A	*	1/1992	Tsuji	342/2
5,139,274	A	*	8/1992	Oseman	277/552
5,169,160	A		12/1992	Gaskill et al.	
5,205,568	A	*	4/1993	Stoll et al.	277/615
5,297,491	A	*	3/1994	Sippel et al.	102/469
5,346,230	A	*	9/1994	Schumacher et al.	277/551
5,431,415	A	*	7/1995	Millonig et al.	277/353
5,482,296	A	*	1/1996	Peppiatt et al.	277/568
5,649,713	A	*	7/1997	Ledgerwood	277/615
5,969,288	A	*	10/1999	Baud	102/466
6,053,502	A	*	4/2000	Hallenstvedt	277/572
6,113,108	A	*	9/2000	Friend et al.	277/549
6,116,613	A	*	9/2000	Friend et al.	277/549
6,189,894	B1	*	2/2001	Wheeler	277/549
6,209,882	B1	*	4/2001	Riess	277/562
6,231,051	B1	*	5/2001	Mueller et al.	277/603
6,290,235	B1	*	9/2001	Albertson	277/510
6,454,273	B1	*	9/2002	Kashima et al.	277/437
6,575,471	B1	*	6/2003	Grosspietsch et al.	277/436
6,640,943	B1		11/2003	Daws et al.	
6,722,658	B2	*	4/2004	Siegrist et al.	277/436
7,090,222	B2	*	8/2006	Watanabe et al.	277/549
7,198,275	B2		4/2007	Gravier	
7,717,432	B2	*	5/2010	Kondo et al.	277/353
7,770,898	B2	*	8/2010	Dietle et al.	277/559
2003/0209162	A1	*	11/2003	Schmees et al.	102/472
2006/0237916	A1		10/2006	Peter et al.	
2007/0216108	A1		9/2007	Zitting et al.	

FOREIGN PATENT DOCUMENTS

EP	104504	A1 *	4/1984

* cited by examiner

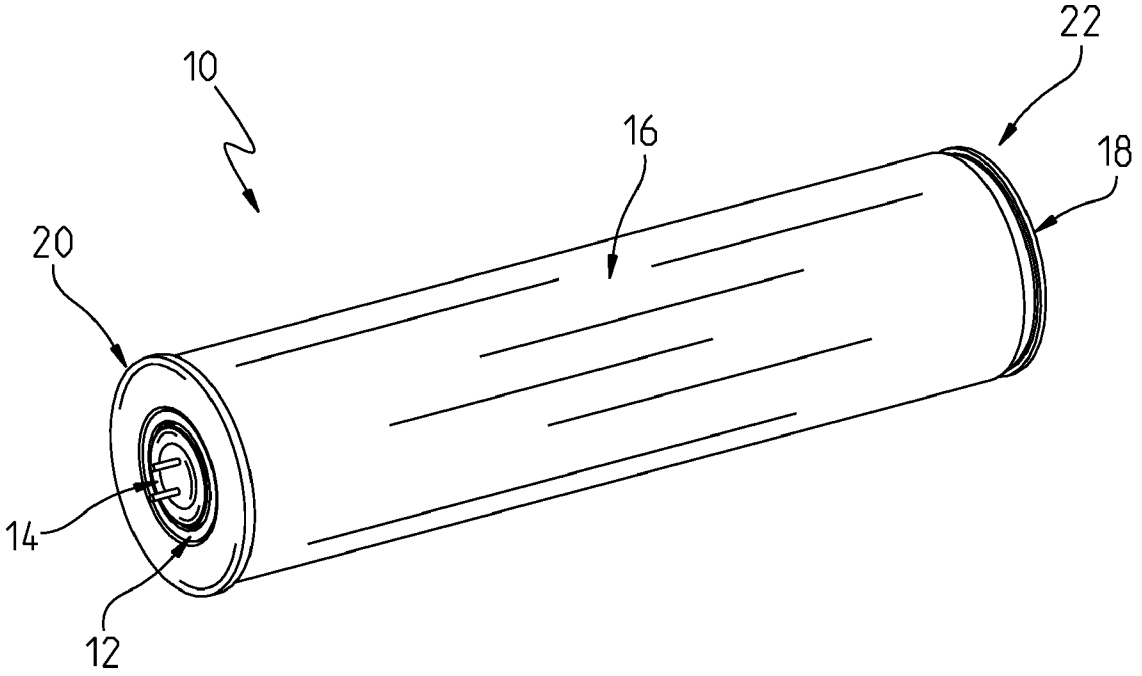

FIG. 1

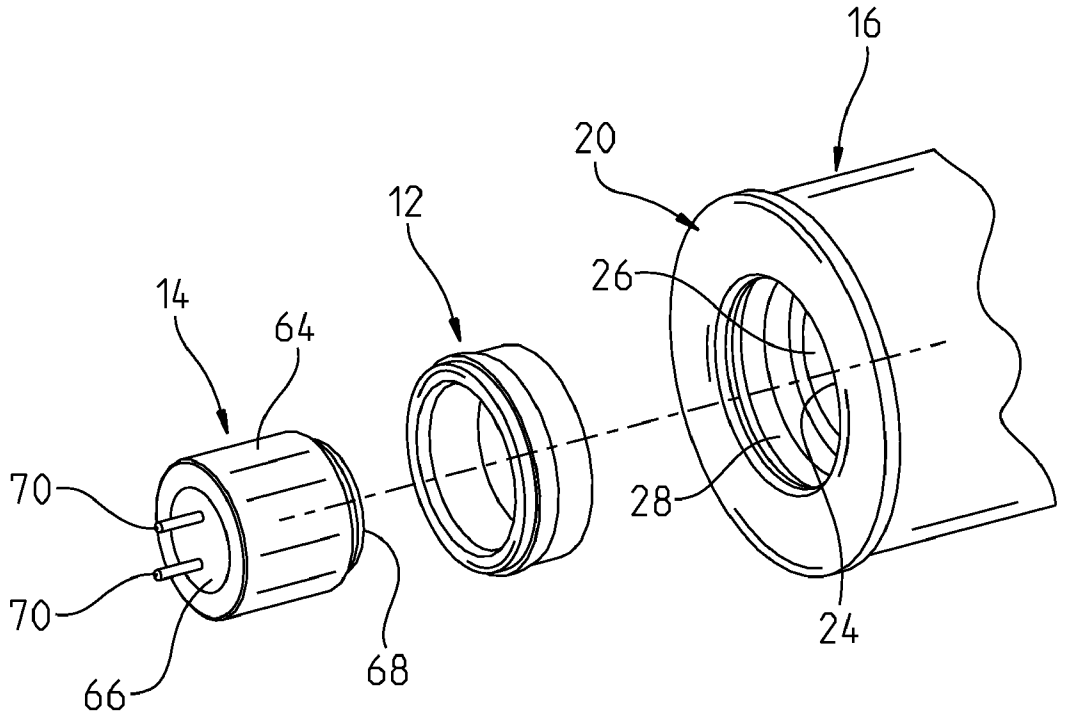

FIG. 2

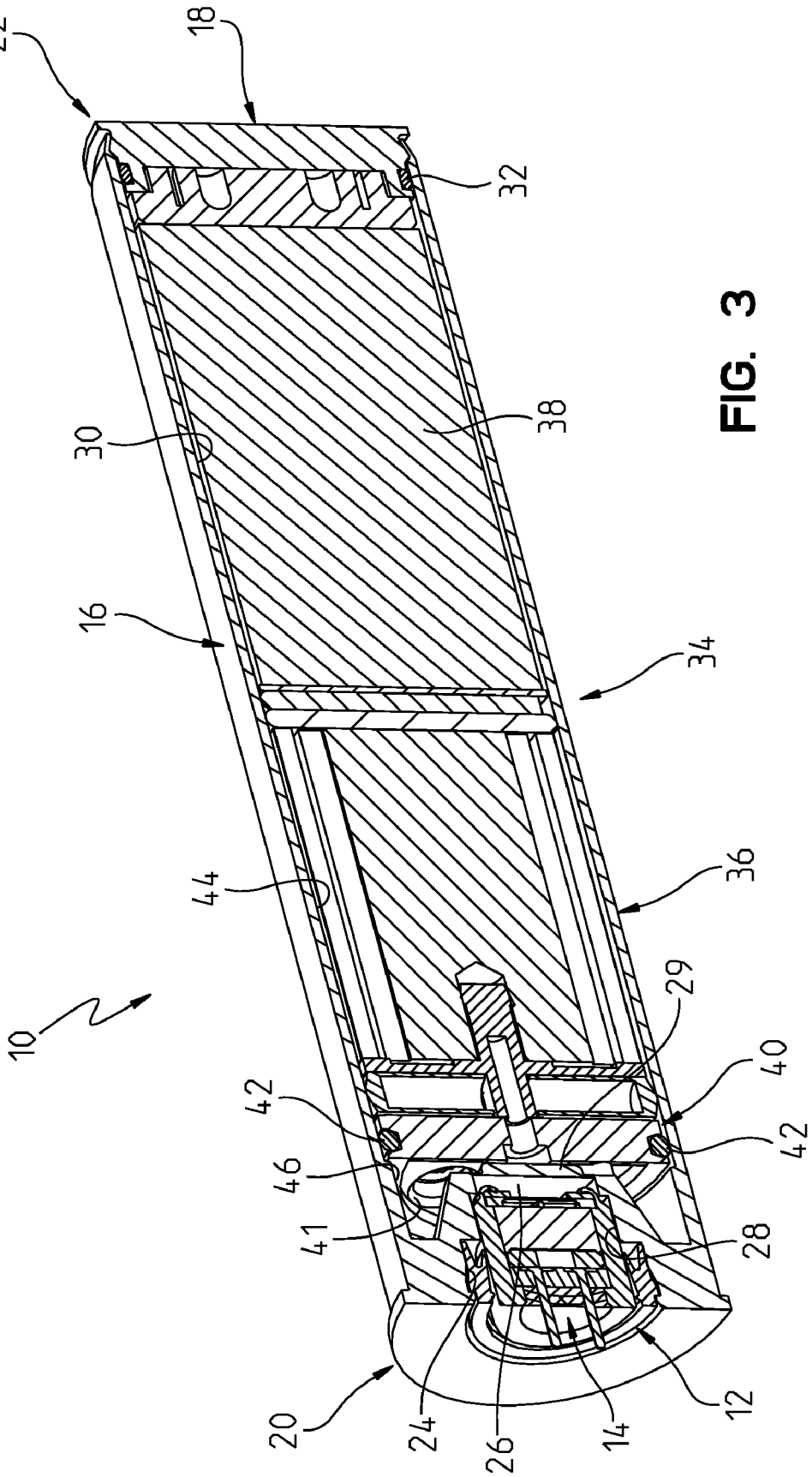

FIG. 3

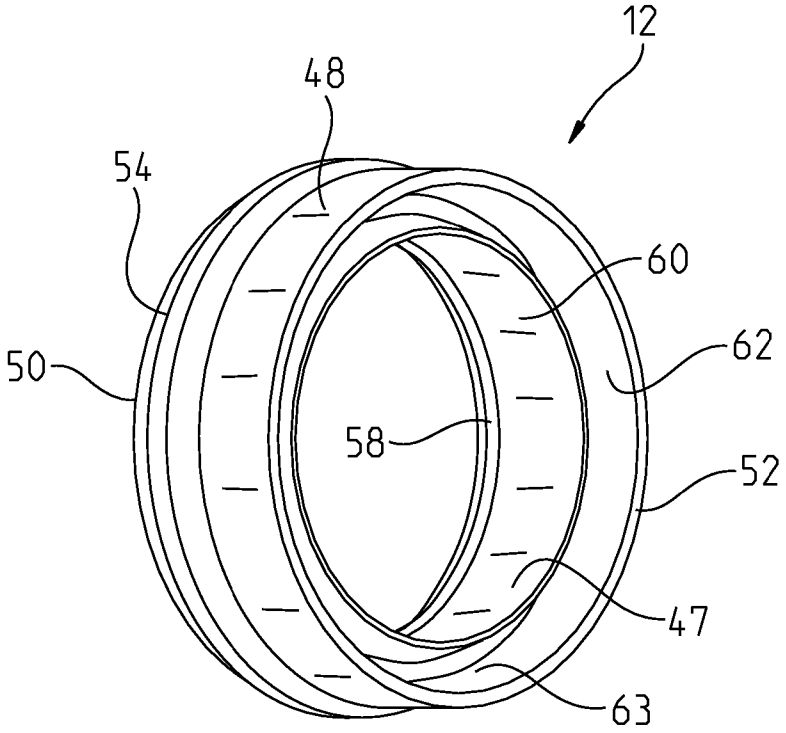

FIG. 4

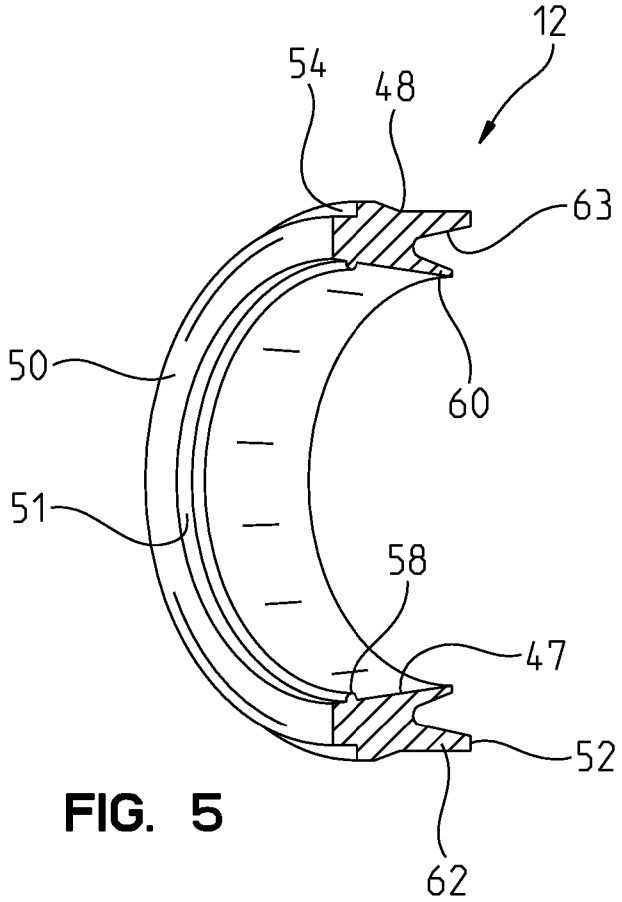

FIG. 5

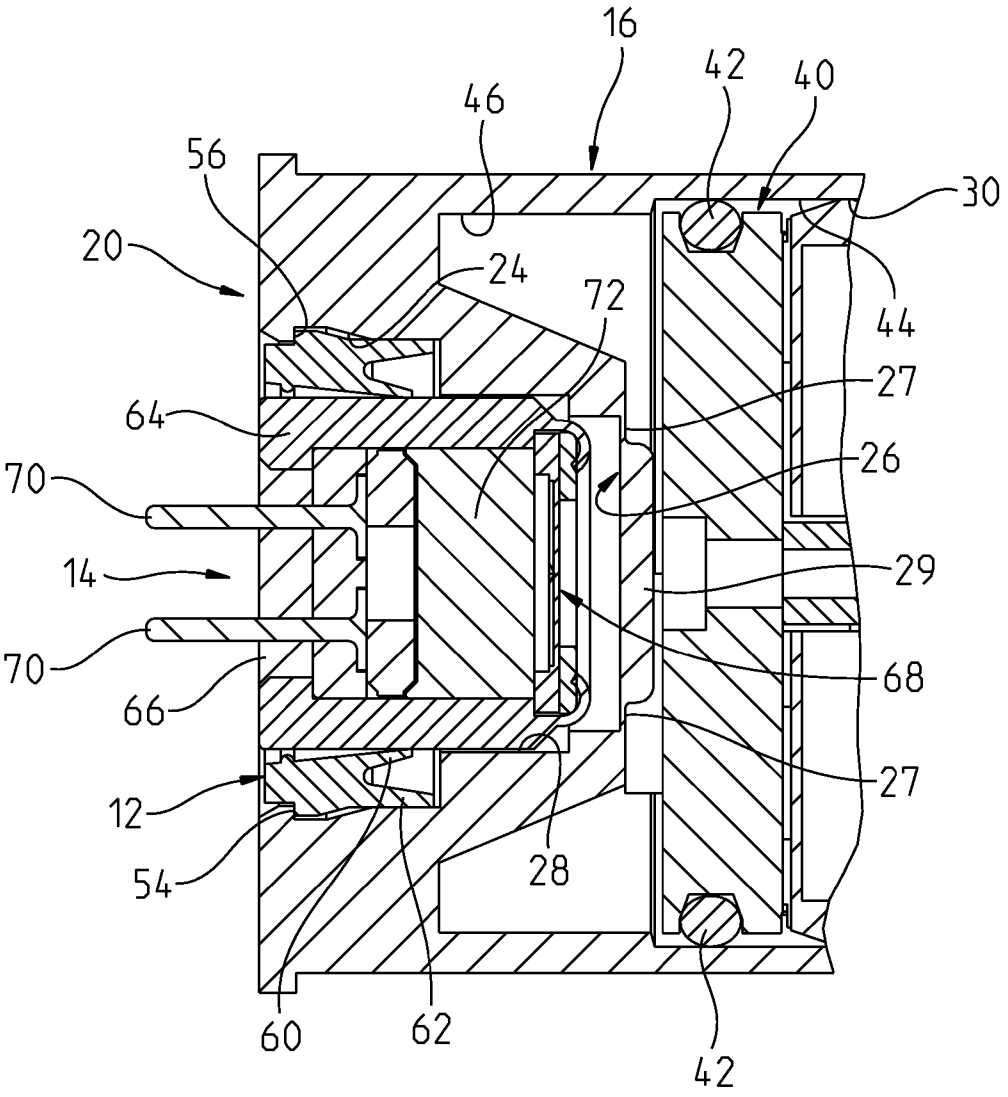
16
42
40
46
56
30
20
24
72
44
27
64
26
70
29
14
68
70
66
27
12
28
54
60
62
42

FIG. 6

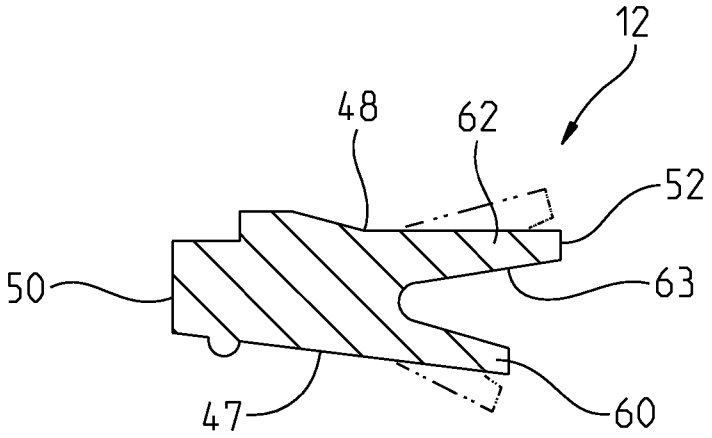
12
48
62
52
50
63
47
60

FIG. 8

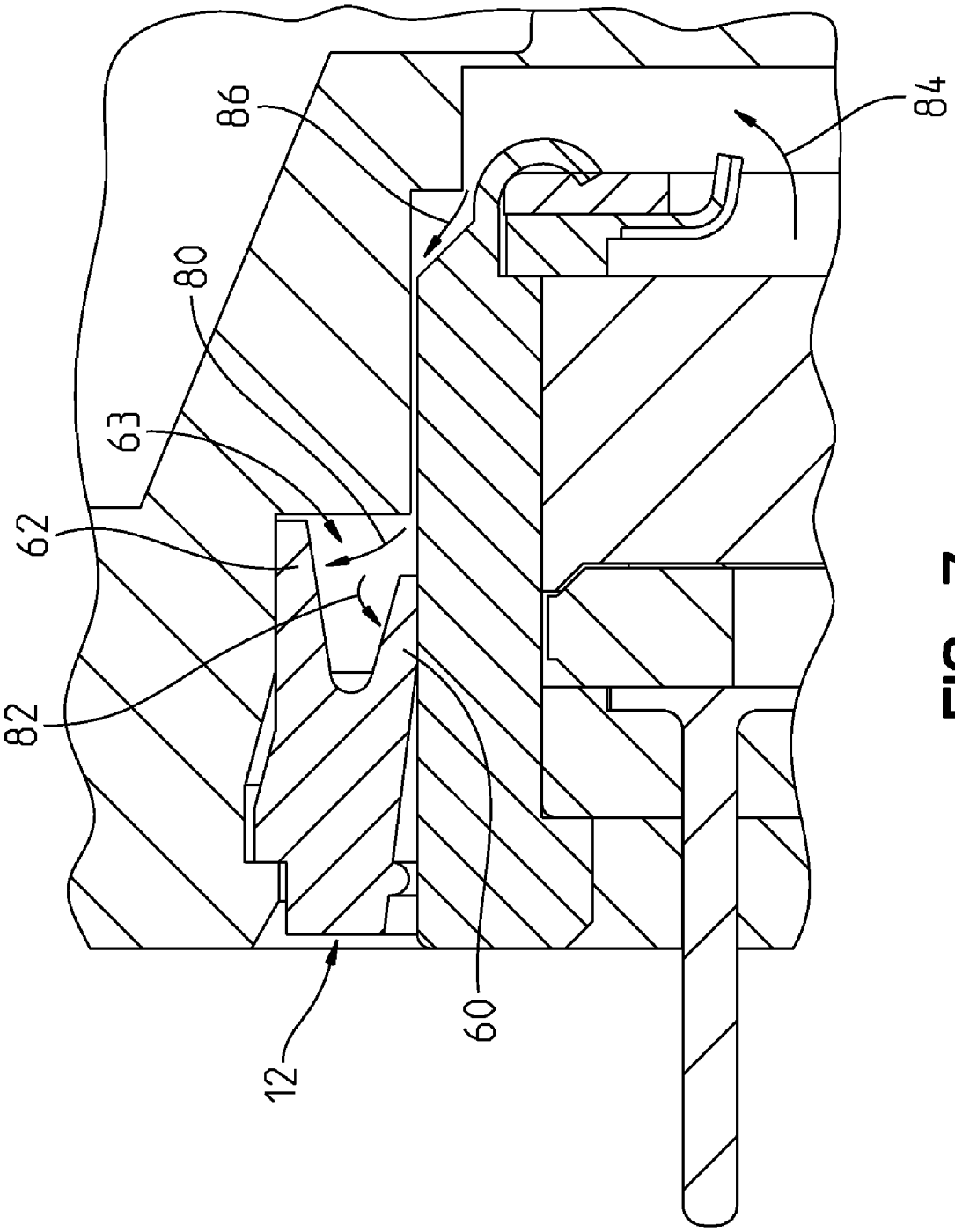

FIG. 7

PRESSURE SEAL

CROSS-REFERENCE TO RELATED APPLICATION

This application is a continuation of U.S. patent application Ser. No. 12/533,760, filed Jul. 31, 2009, the disclosure of which is expressly incorporated by reference herein.

STATEMENT REGARDING FEDERALLY SPONSORED RESEARCH OR DEVELOPMENT

The invention described herein includes contributions by one or more employees of the Department of the Navy made in performance of official duties and may be manufactured, used, licensed by, or for the United States Government without payment of any royalties thereon.

BACKGROUND AND SUMMARY

The present disclosure relates generally to seals. More particularly, the present disclosure relates to seals that are able to reduce pressure loss from high pressure environments while providing a lower friction interface in a non-high pressure environments.

According to one aspect of the present disclosure, an ejector device is provided including a housing, an ejectable device, and a seal. The housing having an ignition source receiving bore including a bore wall. The ejectable device is disposed within the housing. The seal has an annular forked end exposed to a pressure bore. The forked end has an outer fork and an inner fork. The forks are constructed from a material that permits deflection of the forks when the forks are exposed to high pressure within the pressure bore, deflection of the forks sealing the seal against the bore wall and against an ignition source received in the ignition source receiving bore.

According to another aspect of the present disclosure, a method of sealing an interface is provided including the step of providing a seal including a first sealing flange and a second sealing flange. The first and second sealing flanges having a forked orientation relative to each other defining an open end and defining a pressure zone between the two sealing flanges including the open end. The method further including the step of abutting the first flange to a first body and abutting the second flange to a second body. The seal permits relative movement of the first and second bodies when the pressure zone has an internal pressure approximating natural atmospheric pressure. The seal restricts relative movement of the first and second bodies when the pressure zone is infused with high pressure gas.

According to another aspect of the present disclosure, an interface sealing device is provided including a seal, a first body, and a second body. The seal includes a first sealing flange and a second sealing flange. The first and second sealing flanges have a forked orientation relative to each other defining an open end and defining a pressure zone between the two sealing flanges including the open end. The first body abuts the first flange. The second body abuts the second flange. The seal permits relative movement of the first and second bodies when the pressure zone has an internal pressure approximating natural atmospheric pressure, the seal restricting relative movement of the first and second bodies when the pressure zone is infused with high pressure gas.

According to another aspect of the present disclosure, an interface sealing device is provided including a seal adapted to selectively restrict flow of a fluid between a first body and a second body, said seal comprising a first sealing flange; and a second sealing flange; the first and second sealing flanges having a forked orientation relative to each other defining an open end and defining a pressure zone between the two sealing flanges including the open end; the seal permitting relative movement of first and second bodies abutting first and second sealing flanges, respectively, when the pressure zone has an internal pressure approximating natural atmospheric pressure, the seal restricting relative movement of the first and second bodies when the pressure zone is infused with high pressure fluid.

According to another aspect of the present disclosure, an interface sealing device is provided including a seal adapted to selectively restrict flow of a fluid between a first body and a second body, said seal comprising a first sealing flange; and a second sealing flange; the second flange having a first position permitting relative movement of the first and second bodies, the second flange having a second position substantially preventing relative movement of the first and second bodies.

According to another aspect of the present disclosure, a method of manufacturing a sealing device is provided including the steps of forming a main body; forming a first flange extending from the main body; and forming a second flange extending from the main body to form a "V" structure in combination with the first flange; the step of forming the second flange including providing the second flange with a thickness such that the second flange assumes a first position in a low pressure environment and assumes a second position in a high pressure environment, the first position permitting relative movement of first and second bodies abutting the first and second flanges, the second position providing for increased friction such that the second position second position substantially prevents relative movement of the first and second bodies.

According to another aspect of the present disclosure, a gas charge sealing structure is provided including a body defining a central axis which passes through a center of the body and including a gas charge receiving bore; a first sealing flange; and a second sealing flange, the flanges oriented substantially parallel to each other and to the central axis, the flanges cooperating to define a cavity which permits easy removal of the gas charge from the gas charge receiving bore when the body is subjected to low pressure, the flanges cooperating to prevent easy removal of the gas charge from the gas charge receiving bore when the cavity is subjected to high pressure.

Additional features of the present disclosure will become apparent to those skilled in the art upon consideration of the following detailed description of the presently perceived best mode of carrying out the disclosure.

BRIEF DESCRIPTION OF THE DRAWINGS

The detailed description of the drawings particularly refers to the accompanying figures in which:

FIG. **1** is a perspective view of an illustrative projectile device with a seal and an impulse cartridge installed therein;

FIG. **2** is an exploded view of a portion of the projectile device, seal, and impulse cartridge of FIG. **1**;

FIG. **3** is a cross-sectional perspective view of the projectile device, seal, and impulse cartridge of FIG. **1**;

FIG. **4** is a perspective view of a seal utilized between the projectile housing and impulse cartridge as shown in FIG. **2**;

FIG. **5** is a cross-sectional perspective view of the seal of FIG. **4**;

FIG. **6** is a cross-sectional view of a portion of the projectile housing, seal, and impulse cartridge of FIG. **1**;

FIG. **7** is a cross-sectional view of a portion of the projectile housing, seal, and impulse cartridge of FIG. **1**, during firing; and

FIG. **8** is a cross-sectional view of the seal of FIG. **4** showing secondary positioning of the flanges.

DETAILED DESCRIPTION OF THE DRAWINGS

FIG. **1** shows projectile device **10** with seal **12** and impulse cartridge **14** installed therein. Projectile device **10** includes housing **16** and end cap **18**. Housing **16** is illustratively metallic (such as aluminum), substantially cylindrical, and includes propellant end **20** and ejection end **22**.

Propellant end **20** includes bore **24** sized and shaped to receive seal **12** therein. Bore **24** is defined within propellant end **20** as a multi-diametered bore having base wall **26** and side wall **28**. Base wall **26** is formed having areas of reduced wall thickness **27** relative to other wall portions such that it forms shear disk **29** that is discussed in more detail below.

Ejection end **22** is opposite propellant end **20** and illustratively includes payload bore **30** having a depth that takes up substantially all the length of housing **16** (excluding that portion of the length used to define bore **24** in propellant end **20**, see FIG. **3**). Payload bore **30** is sized to at least partially receive end cap **18** therein. End cap **18** includes gasket **32** that provides a seal between end cap **18** and the interior wall of payload bore **30**.

As shown most clearly in FIG. **3**, payload bore **30** illustratively receives multi-component payload **34** therein. Payload **34** includes propellant unit **36** and projectile **38**. While the present disclosure shows projectile **38** having multiple components, the concepts of the current disclosure can be used in many projectile accelerating applications and many pressure sealing applications.

Propellant unit **36** includes packing **40**. Packing **40** approximates a disc of diameter slightly less than the diameter of payload bore **30**. Seal **42** is arranged around packing **40** to create a seal between packing **40** and payload bore **30**. In this manner, packing **40** separates payload bore **30** into fore chamber **44** and rear chamber **46**. Furthermore, packing **40** serves as a piston head upon which pressure generated in rear chamber **46** can act, as discussed below. Projectile **38** is located in fore chamber **44**. Packing **40** may also include bores **41**, FIG. **3**, that are sized and shaped to receive igniter pellets therein.

Seal **12** is shown most clearly in FIGS. **4** and **5**. Seal **12** is illustratively constructed by injection molding of material having flexibility under stress while maintaining overall shape fidelity such as a linear low density polyethylene (LLDPE). One such LLDPE is a narrow molecular weight distribution copolymer, such as Dowlex® 2535 polyethylene resin available from Dow Chemical Company. Seal **12** is annular and includes inner surface **47** having inner diameter and outer surface **48** having outer diameter. The inner diameter is substantially equal to an outer diameter of impulse cartridge **14**. The outer diameter of seal **12** is substantially equal to the inner diameter of bore **24**.

Additionally, seal **12** includes top side **50** and bottom side **52**. Outer surface **48** of top side **50** includes circumferential shoulder **54**. When seal **12** is placed within bore **24**, shoulder **54** abuts shoulder **56** of bore **24** to retain seal **12** within bore **24**. Inner diameter **51** of top side **50** also includes circumferential ledge **58**. Ledge **58** is sized and located to act as a pull-ring during the injection molding process.

Bottom side **52** includes a set of annular forked flanges **60**, **62**. Inner flange **60** forms part of inner surface **47**. Outer flange **62** forms part of outer surface **48**. Flanges **60**, **62** combine to form a "V" shape. It should be appreciated that inner flange **60** is shorter than outer flange **62** such that when bottom side **52** abuts a flat surface, outer flange **62** abuts the surface, but inner flange **60** does not. Inner flange **60** and outer flange **62** combine to define expansion chamber **63** therebetween on bottom side **52** of seal **12**. Flanges **60**, **62** are thin enough such that they are pliable when force is applied thereto and can deflect under pressure. The thickness of flanges **60**, **62** are chosen to elicit a desired deflection profile when pressurized fluid is placed in expansion chamber **63** and also based on the maximum pressure and heat that needs to be withstood while maintaining structural integrity. Furthermore, the thickness of flange **60** is additionally chosen to provide a desired interference fit with impulse cartridge **14** received therein.

Impulse cartridge (I/C) **14** is illustratively an electrically activated impulse cartridge such as model number CCU-136A/A manufactured by Capco, Inc. I/C **14** includes a substantially cylindrical housing **64**, pair of electrodes **70** extending from top side **66** of housing **64**, and bottom side **68**. Housing **64** is illustratively constructed from metal, such as steel. An explosive or pyrotechnic charge **72** is disposed in housing **64** and is ignitable by a high voltage electric signal imposed on electrodes **70**. Bottom side **68** is designed to predictably fail to allow the escape of pressurized gas and hot particulate (non-fully combusted fuel).

In assembly, all of the components located in payload bore **30**, including end cap **18** are assembled and stored in the assembled condition. Furthermore, seal **12** is placed within bore **24**. When seal **12** is placed within bore **24**, circumferential shoulder **54** abuts shoulder **56** to retain seal **12** within bore **24**. Accordingly, seal **12** is held within bore **24** in a substantially permanent manner (seal **12** is not easily removed without damage being done to seal **12** that would result in a significant degradation of operation thereof).

At some point, such as just before being loaded into a magazine (not shown), impulse cartridge **14** is seated within seal **12**. When so placed, inner forked flange **60** abuts cylindrical housing **64**. Additionally, bottom side **68** is thereby located proximate base wall **26** of bore **24**. However, it should be appreciated that impulse cartridge **14** can readily be separated from housing **16** and seal **12** without harming any of the components. Notably, when a magazine is removed from its receiver and projectiles **10** are removed from the magazine, impulse cartridges **14** are removed from seal **12** and bore **24** to allow storage of projectile **10** having a decreased likelihood of unintentional activation. Accordingly, in an unpressurized (or ambiently pressurized) state, inner flange **60** of seal **12** provides a slight interference fit that imparts a first coefficient of friction on housing **64** that is very low and only slightly discourages I/C **14** from falling out of seal **12** and bore **24**. The first coefficient of friction can be easily overcome by an individual or automated process pulling I/C **14** from seal **12** and bore **24**.

In use, when properly positioned, end cap **18** is aimed and pair of electrodes **70** are coupled to a voltage source (not shown). When directed, the voltage source imparts a voltage to pair of electrodes **70**. The imparted voltage then activates charge **72** causing a rapid gas expansion pressure to be applied to cylindrical housing **64** and bottom side **68**. This pressure causes bottom side **68** to predictably fail as shown in FIG. **7**. This separation allows the pressurized gas to enter and pressurize, along arrows **84**, **86**, the portions of bore **24** that are not filled by impulse cartridge **14** and seal **12**. Included in the pressurized portions is expansion chamber **63** as shown in FIG. **7**. The pressurization of expansion chamber **63** urges flange **62** outwardly against bore **24** (arrow **80**) and urges

flange **60** inwardly against cylindrical housing **64** (arrow **82**). Thus, side wall **28** of bore **24** and cylindrical housing **64** act as seats for seal flanges **60**, **62**.

Accordingly, increased pressure within bore **24** causes increased urging of flange **60** against impulse cartridge **14**. More specifically, FIG. **7** shows that a greater portion of flange **60** is pressed into contact with housing **64** than in the unfired condition shown in FIG. **6**. FIG. **8** shows the unpressurized "rest" state of seal **12**. Additionally, FIG. **8** shows, in phantom, a pressurized "expanded" state that flanges **60**, **62** of seal **12** would assume under pressure if not restrained by bore **24** and housing **64**. Thus, when bore **24** is unpressurized, impulse cartridge **14** is easily removed due to a relatively low frictional force between the seal **12** and the cartridge **14**. However, when bore **24** is pressurized, seal **12** tightly grips impulse cartridge **14** and reduces the likelihood that impulse cartridge **14** is able to exit bore **24**. In other words, the frictional force between the seal **12** and the impulse cartridge **14** is greater in the pressurized mode (i.e., when bore **24** is pressurized) than in the unpressurized mode (i.e., when bore **24** is substantially at atmospheric pressure (1 ATM)).

Furthermore, the inward expansion of inner flange **60** against impulse cartridge **14** reduces the existence of pathways for gas loss that may be present between seal **12** and impulse cartridge **14**. Similarly, the pressurized gas urges outer flange **62** against side wall **28** of bore **24** thereby reducing the existence of pathways for gas loss that may be present between seal **12** and bore **24**. Accordingly, the sealing pressure exerted by flanges **60**, **62** against cartridge **14** and bore **24** is directly proportional to the pressure within bore **24**. The reduction in pathways between seal **12**, impulse cartridge **14**, and the side wall **28** provides reduced pathways for soot from activation of impulse cartridge **14** from escaping and coming into contact with the electronic elements that impart voltage to electrodes **70** thereby providing for improved ballistic consistency of projectile **38**. A firing of projectile device **10** is expected to generate between 1400-2000 psi within rear chamber **46** and bore **24**.

With the pressurized gas urging flanges **60**, **62** into compression against impulse cartridge **14** and bore **24** respectively, the gas is effectively trapped within bore **24**. When the pressure reaches a critical level, the portions of reduced wall thickness **27** of bore **24** fracture and release shear disk **29**. The pressurized gas is then able to expand into rear chamber **46** of payload bore **30**. Accordingly, seal **12** is designed so as to reliably function to retain gasses under pressure at least up to the pressure necessary to release shear disk **29**. Furthermore, while seal **12** abuts impulse cartridge **14** and bore **24** in both the low and high pressure environments, the high pressure environment does provide for slight deflection of flanges **60**, **62** to achieve a more complete seal. The seal **12** is configured to releasably seal pressurized gas within an operational temperature range of −65° F. to +160° F.

Hot particulate (non-fully combusted fuel) from cartridge **14** abuts igniter pellets (not shown) located in bores **41** and cause them to ignite and provide even more pressurized gas within rear chamber **46**. As gas accumulates in rear chamber **46** of payload bore **30**, packing **40** is urged away from propellant end **20** and towards ejection end **22**. This urging results in expelling/deployment of end cap **18** and multi-component payload **34** from payload bore **30**.

Accordingly, seal **12**, via flanges **60**, **62** provides an interface between bore **24** and impulse cartridge **14** that allows relative movement therebetween when flanges **60**, **62** are exposed to a low or normal (near 1 ATM) pressure environment for placement and removal of impulse cartridge **14**. Seal **12** further provides an interface between bore **24** and impulse cartridge **14** that restricts relative movement therebetween when flanges **60**, **62** are exposed to a high pressure environment such as that experienced during firing. Accordingly, while the disclosure has focused on implementations in the area of projectiles and explosives, the seal of the present disclosure should be understood to be applicable to any implementation where high pressure sealing is desired. Furthermore, while the above implementation discusses sealing gasses, the seal can be applied to fluids generally (gasses, liquids, or combinations thereof).

Although the disclosure has been described in detail with reference to certain preferred embodiments, variations and modifications exist within the spirit and scope of the disclosure as described and defined in the following claims.

The invention claimed is:

1. An interface sealing device including:

a seal including a first sealing flange and a second sealing flange; the first and second sealing flanges having a forked orientation relative to each other defining an open end and defining a pressure zone between the two sealing flanges including the open end;

a first body abutting the first flange; and

a second body abutting the second flange; the seal permitting insertion and removal relative movement of the first and second bodies when the pressure zone has an internal pressure approximating natural atmospheric pressure, the seal restricting relative movement of the first and second bodies when the pressure zone is infused with high pressure gas;

wherein said first sealing flange and second sealing flange have two different lengths so that said high pressure gas enters between said first and second flanges by an opening created by one of the flanges having a shorter length than the other flange;

wherein said seal has a top side which abuts said first body and a bottom side, said bottom side's surface circumference and width defines a receiving area for said second body, a portion of said bottom side abuts said second body, said top side of said seal further comprises a circumferential shoulder which abuts a receiving shoulder formed into said first body to non-destructively retain said seal in place when said second body is inserted into and removed from said first body;

wherein said seal further comprises a first and second end, wherein said first and second flanges are on said first end and said second end is on an opposite side of said seal from said first end;

wherein said bottom side surface is further defined with respect to a first diameter and a second diameter as measured by a line through said center axis from opposing sides of said bottom side surface within said seal, said first diameter line end points are substantially at locations of said bottom side surface in proximity to where said first flange and said second flange joins to a main body of said seal on said first end, said second diameter line end points are substantially at locations of said bottom side surface in proximity to a junction of said circumferential shoulder with an adjacent section of said seal where an edge of said circumferential shoulder faces toward said second side, said second diameter being larger than said first diameter and thereby forming a tapering shape to said bottom side surface that is operable to guide said second body as it is inserted into said seal from said second end;

wherein said first diameter is further determined so as to provide a slight interference fit between said bottom side surface and an outer portion of said second body;

wherein said seal is formed so that only said second sealing flange is in contact with said second body after said second body is inserted into said seal.

2. The device of claim **1**, wherein the seal is ring-shaped.

3. The device of claim **2**, wherein the first body abuts an outer edge of the ring-shaped seal and the second body is positioned within an inner void of the ring-shaped seal.

4. The device of claim **1**, wherein the seal is fixed relative to the first body.

5. The device as in claim **1**, wherein said first flange is an outer flange and said second flange is an inner flange.

6. The device as in claim **1**, wherein said second flange has a thickness adapted to create an interference fit between said second flange and said second body such that a gripping or friction force is created between said second flange and said second body to restrict movement which is substantially parallel to a surface formed by a side of said second flange abutting said second body.

7. The device as in claim **1**, wherein said first body is formed to have a bore comprising a first bore section having a first diameter and a second bore section having a second diameter adjacent to said first bore section, said second diameter is less than said first diameter, wherein said seal inserts within said first bore section, wherein said second bore section has a diameter greater than an outer diameter of said second body such that said high pressure gas is permitted to pass between an outer section of said second body and said second bore section into said pressure zone.

8. The device as in claim **1**, wherein said bottom surface further includes a flexible annular protrusion that extends towards said center axis in proximity to an edge of said second end.

9. The device as in claim **1**, wherein said seal includes flexible material selected from a group which can substantially prevent pressurized gas from passing between said seal and said first and second bodies within an operational temperature range of −65° F. to +160° F.

10. An interface sealing device including:

a seal adapted to selectively restrict flow of a fluid and selectively restrict movement between a first body and a second body, said seal comprising:

a first sealing flange; and

a second sealing flange; the second flange having a first position permitting insertion and removal relative movement of the first and second bodies, the second flange having a second position substantially preventing relative movement of the first and second bodies;

wherein said first sealing flange and second sealing flange have two different lengths extending away from said seal so that said fluid enters between said first and second flanges by an opening created by one of said flanges having a shorter length than another of said flanges;

wherein said seal has a top side which abuts said first body and a bottom side oriented towards a center axis of said seal, said bottom side abuts said second body, said top side of said seal further comprises a circumferential shoulder which abuts a receiving shoulder formed into said first body to non-destructively retain said seal in place when said second body is inserted into and removed from said first body;

wherein said seal further comprises a first and second end, wherein said first and second flanges are on said first end and said second end is on an opposite side of said seal from said first end;

wherein said bottom side surface is defined by a first diameter and a second diameter as measured by a line through said center axis from opposing surfaces of said bottom surface within said seal, said first diameter line end points are substantially at locations of said bottom side surface in proximity to where said first flange and said second flange joins to a main body of said seal on said first end, said second diameter line end points are substantially at locations of said bottom side surface in proximity to a junction of said circumferential shoulder with an adjacent section of said seal where an edge of said circumferential shoulder faces toward said second side, said second diameter being larger than said first diameter and thereby forming a tapering shape to said bottom side surface that is operable to guide said second body as it is inserted into said seal from said second end;

wherein said first diameter is further determined so as to provide a slight interference fit between said bottom side surface and an outer portion of said second body;

wherein said seal is formed so that only said second sealing flange is in contact with said second body after said second body is inserted into said seal.

11. The device of claim **10**, wherein the first position is assumed by the second flange when subjected to substantially normal atmospheric pressure and the second position is assumed by the second flange when subjected to high pressure.

12. The device as in claim **10**, wherein said bottom surface further includes a flexible annular protrusion that extends towards said center axis in proximity to an edge of said second end.

13. The device as in claim **10**, wherein said seal is includes flexible material selected from a group which can substantially prevent pressurized gas from passing between said seal and said first and second bodies within an operational temperature range of −65° F. to +160° F.

* * * * *