US 20130235533A1

(19) United States

(12) Patent Application Publication

Clifton et al.

(10) Pub. No.: US 2013/0235533 A1

(43) Pub. Date: Sep. 12, 2013

(54) **PROTECTIVE MEMBERS FOR AN ELECTRICAL INTERFACE ASSEMBLY**

(71) Applicants: **Christopher Clifton**, Bloomfield, IN (US); **Dean Jones**, Bloomington, IN (US); **Philip Mitchell**, Springville, IN (US); **David Myers**, Bloomfield, IN (US); **James Pruett**, Montgomery, IN (US)

(72) Inventors: **Christopher Clifton**, Bloomfield, IN (US); **Dean Jones**, Bloomington, IN (US); **Philip Mitchell**, Springville, IN (US); **David Myers**, Bloomfield, IN (US); **James Pruett**, Montgomery, IN (US)

(21) Appl. No.: **13/864,583**

(22) Filed: **Apr. 17, 2013**

Related U.S. Application Data

(62) Division of application No. 12/696,778, filed on Jan. 29, 2010, now Pat. No. 8,450,609.

Publication Classification

(51) **Int. Cl.**
H05K 5/00 (2006.01)

(52) **U.S. Cl.**
CPC ***H05K 5/0004*** (2013.01)
USPC **361/726**

(57) **ABSTRACT**

A signal interface includes a support structure having a pivotally supported cover and side wings. A latching mechanism is provided to secure the cover to the side wings in both stowed and deployed positions.

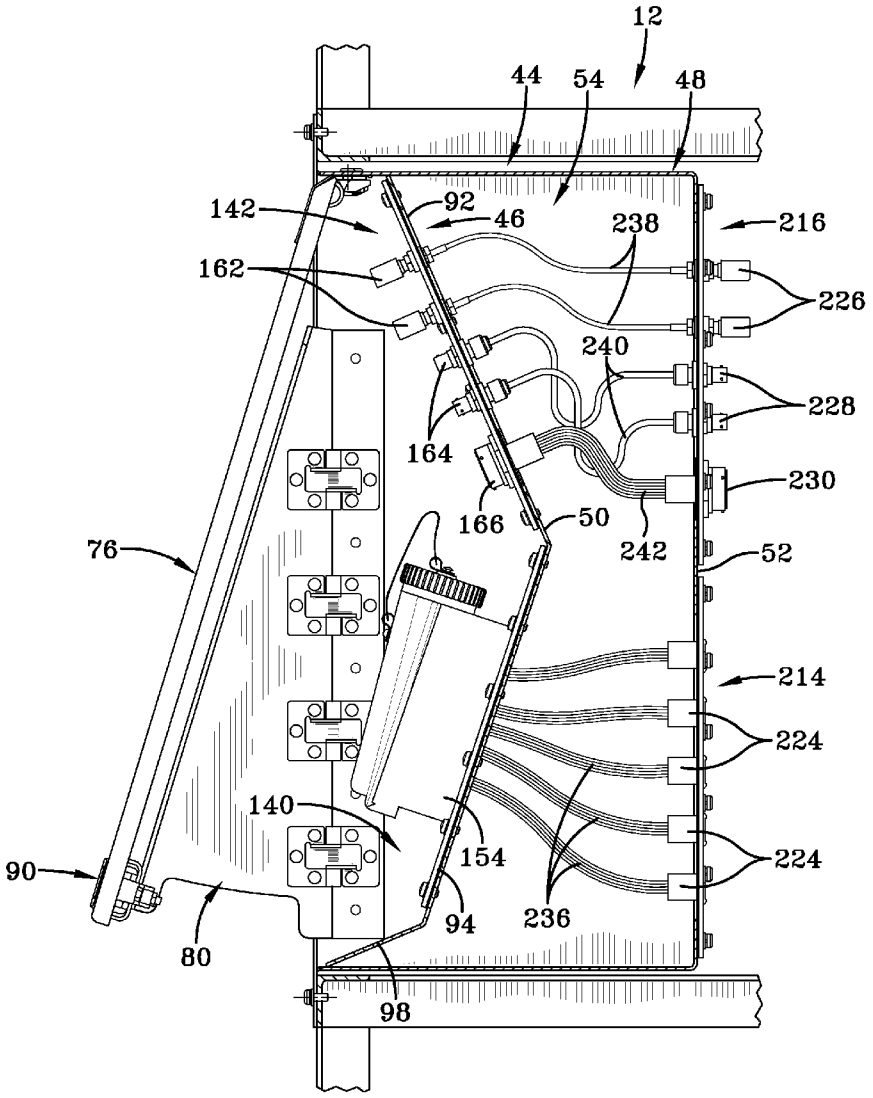

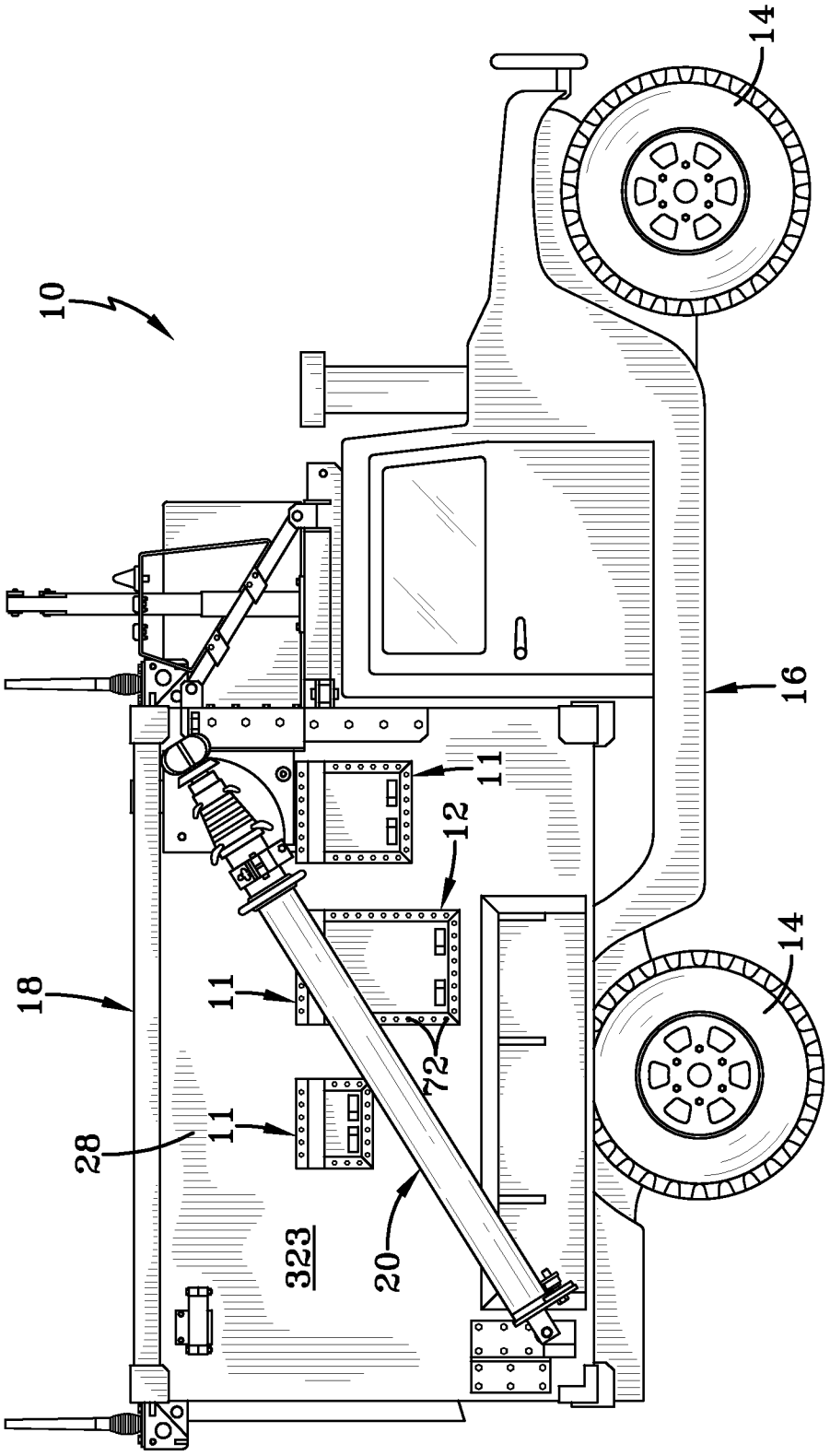

FIG-1

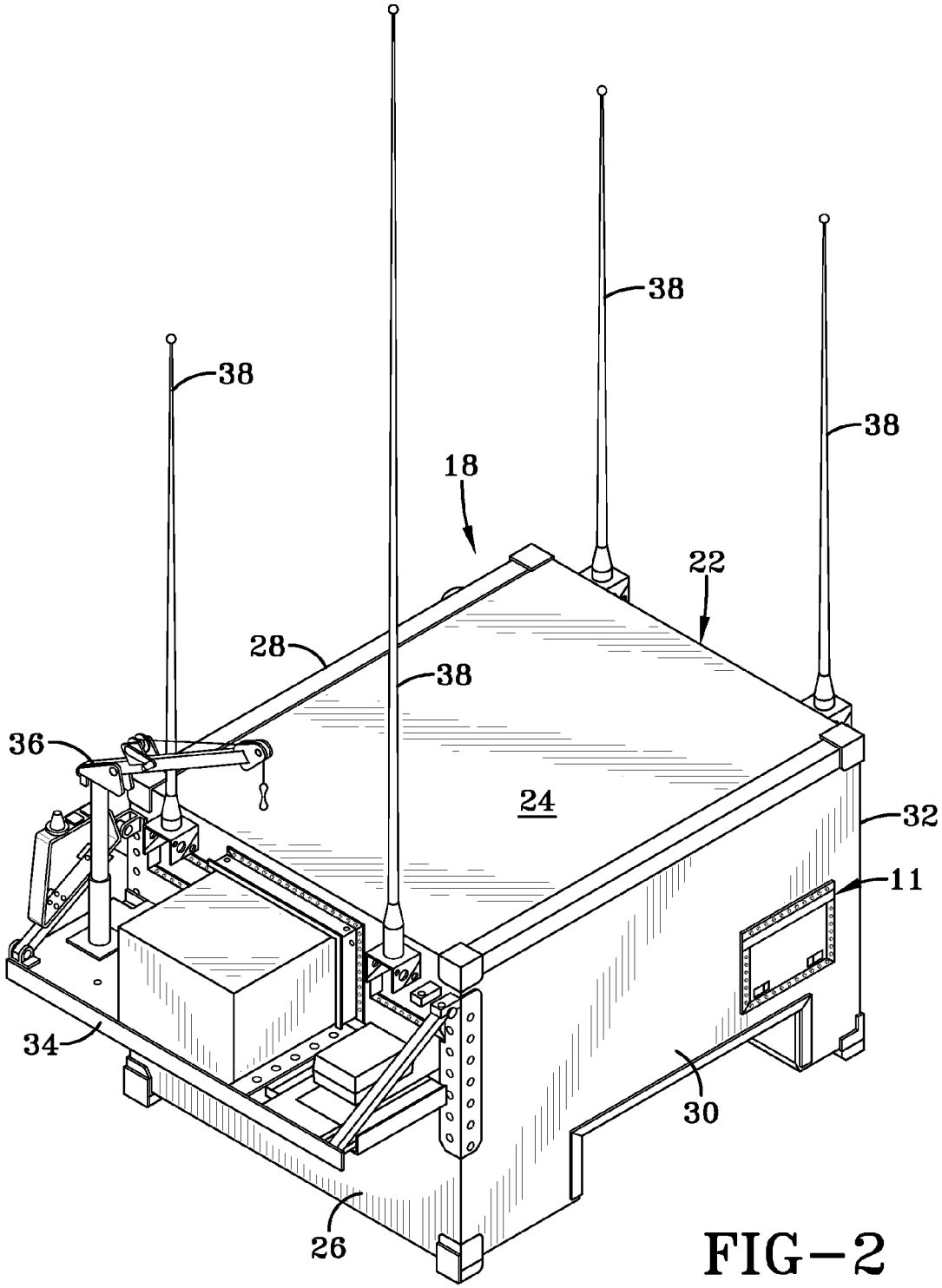

FIG-2

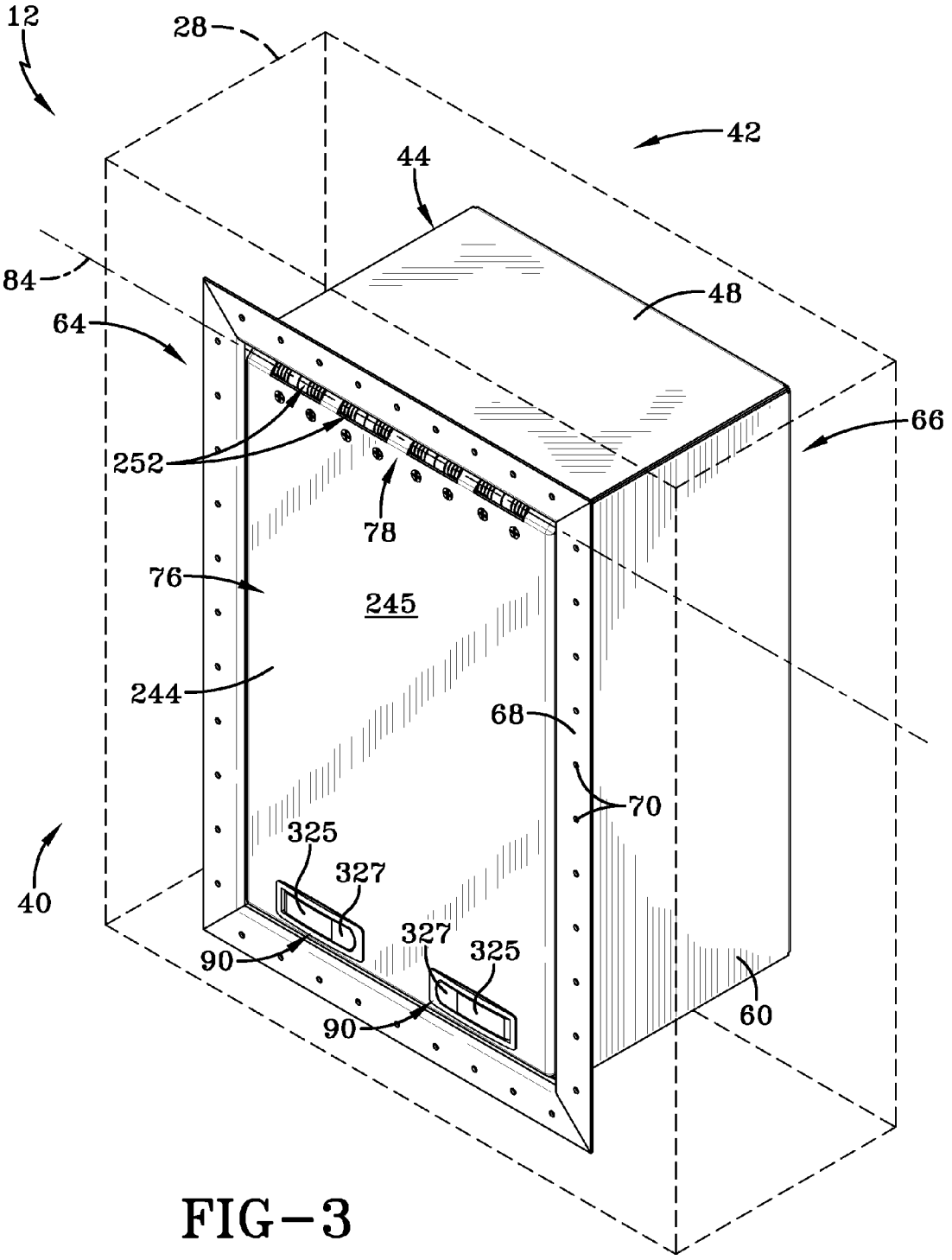
12
28
42
44
84
48
64
66
252
78
76
245
244
68
70
325
327
40
327
325
90
90
60

FIG-3

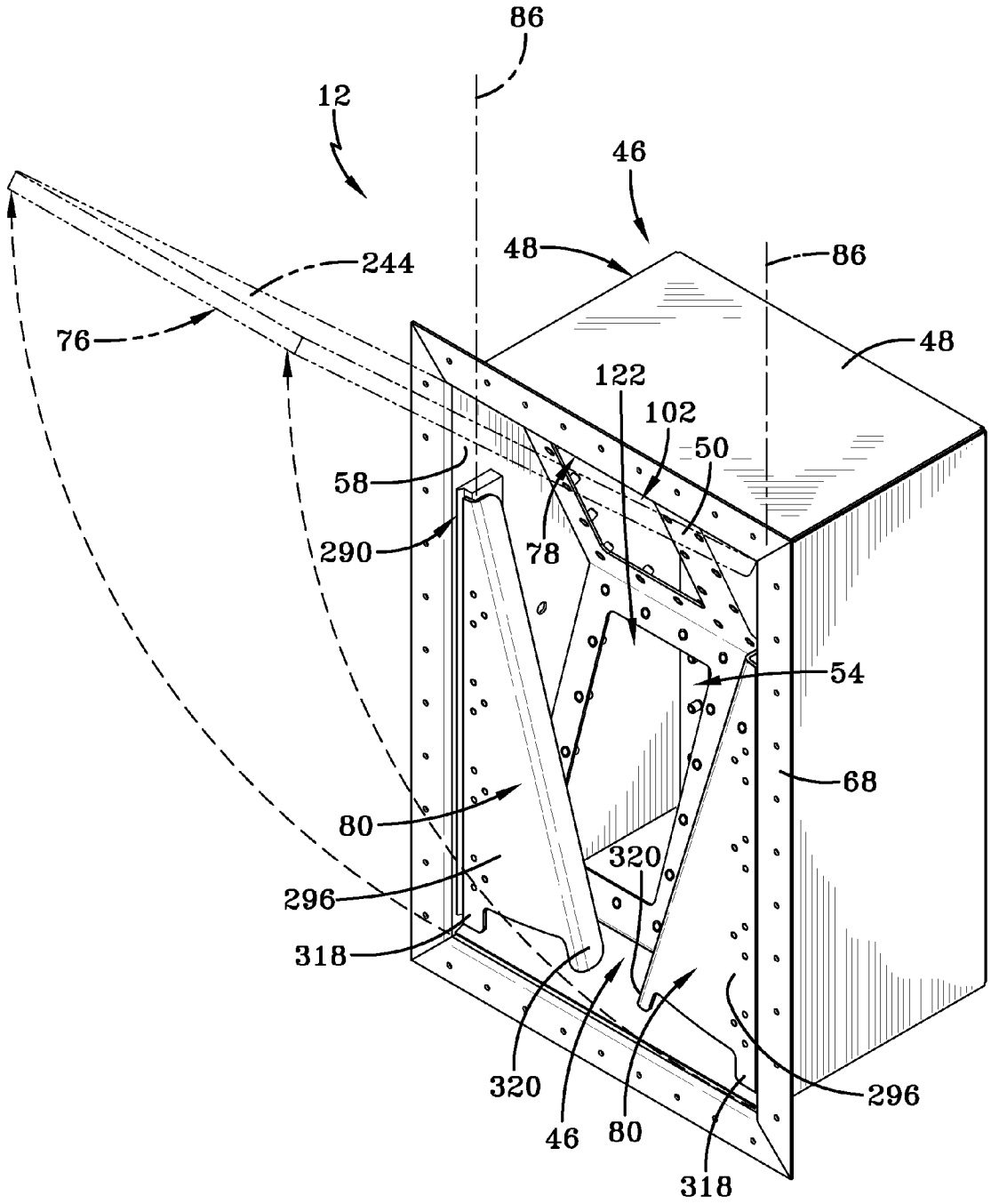
86
12
46
48
86
244
76
48
122
102
50
58
290
78
54
68
80
320
296
318
320
46
80
296
318

FIG-4

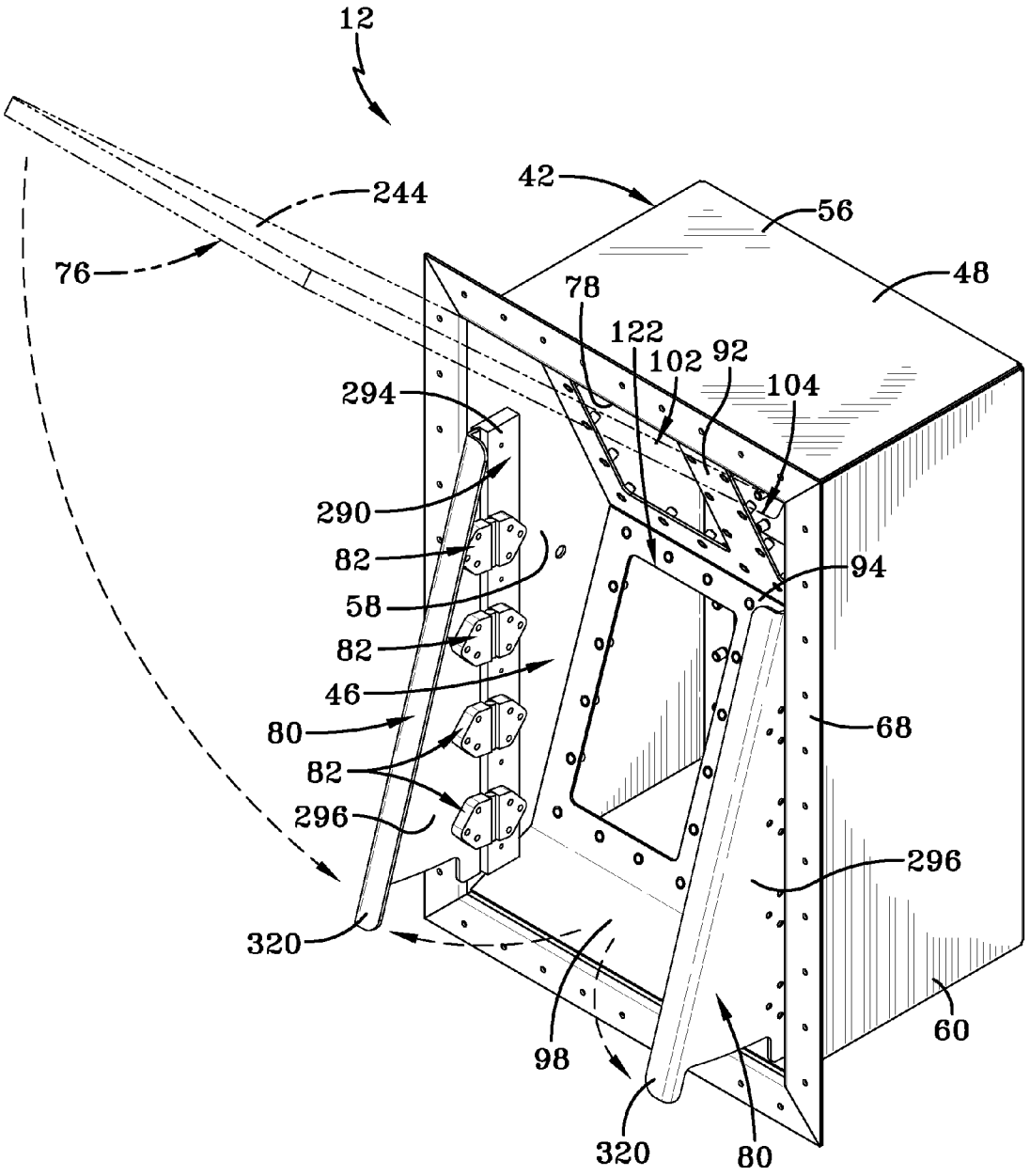
12
244
42
56
76
48
78
122
102
92
104
294
290
82
58
94
82
46
80
68
82
296
296
320
60
98
320
80

FIG-5

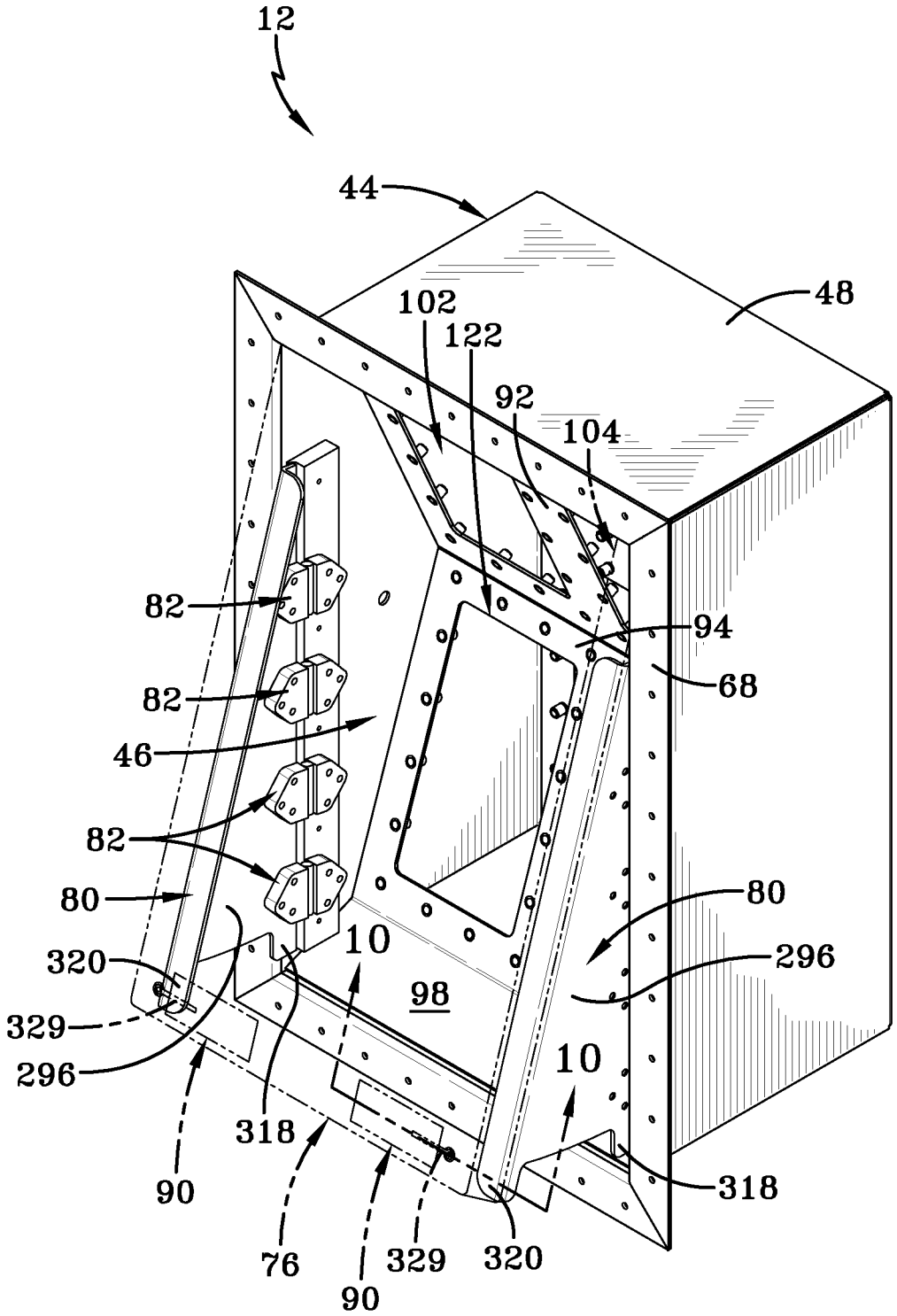
12
44
48
102
122
92
104
82
82
46
82
80
320
329
296
94
68
80
296
10
98
10
318
90
76
90
329
320
318

FIG–6

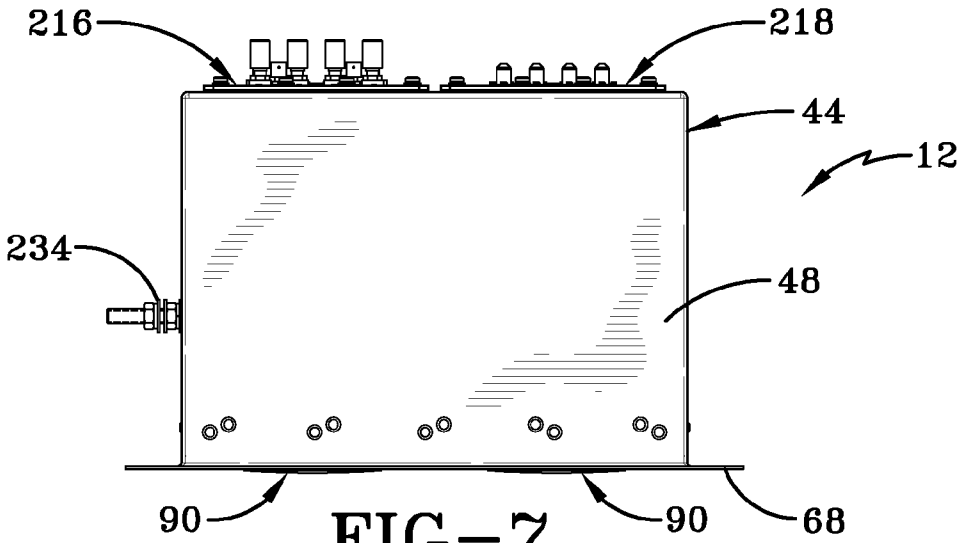
216
218
44
12
234
48
90
90
68

FIG-7

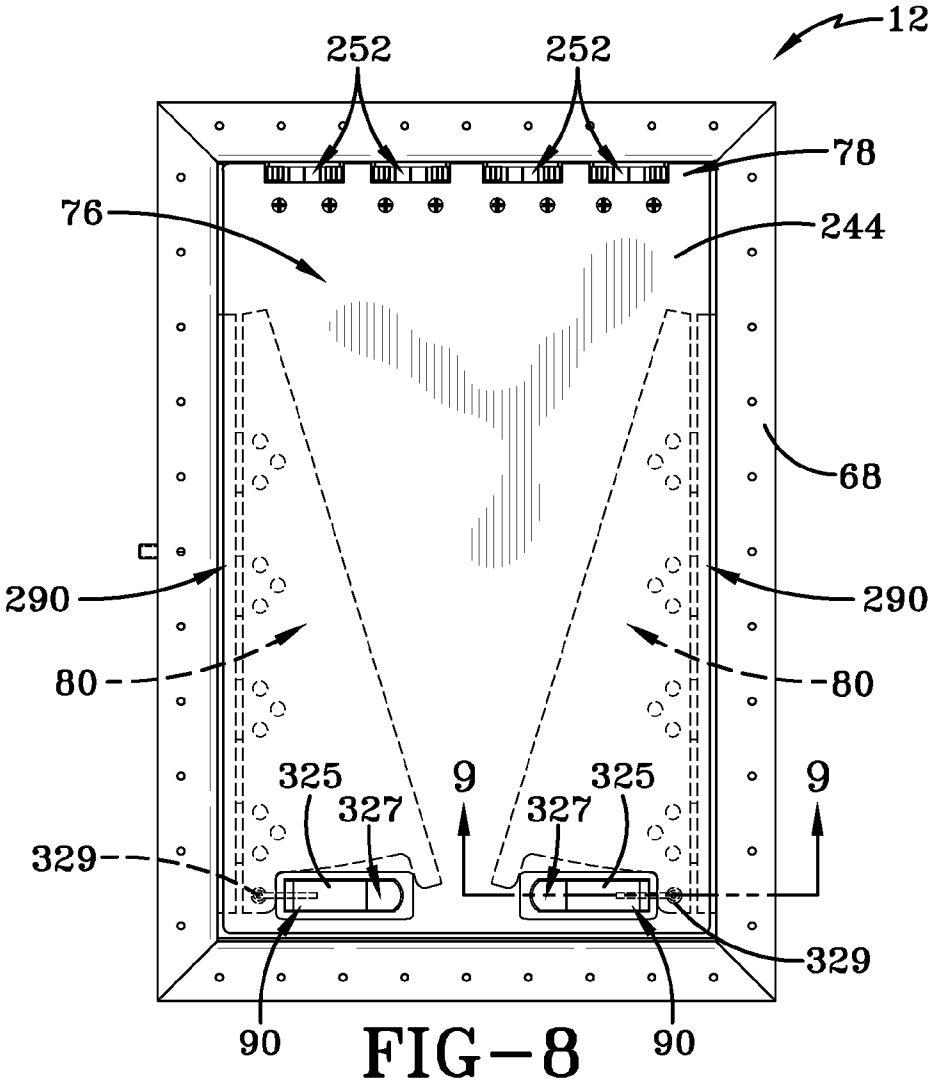
12
252
252
78
76
244
68
290
290
80
80
325
9
325
9
327
327
329
329
90
90

FIG-8

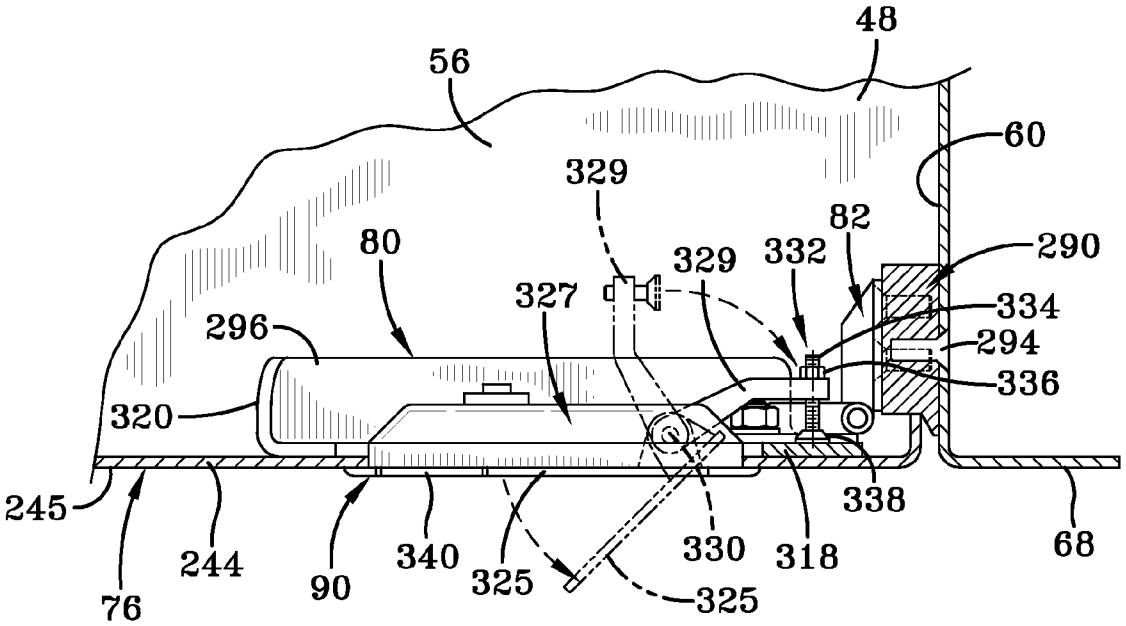
48
56
60
329
82
80
329
332
290
327
334
296
294
336
320
245
338
244
90
340
325
330
318
68
76
325

FIG-9

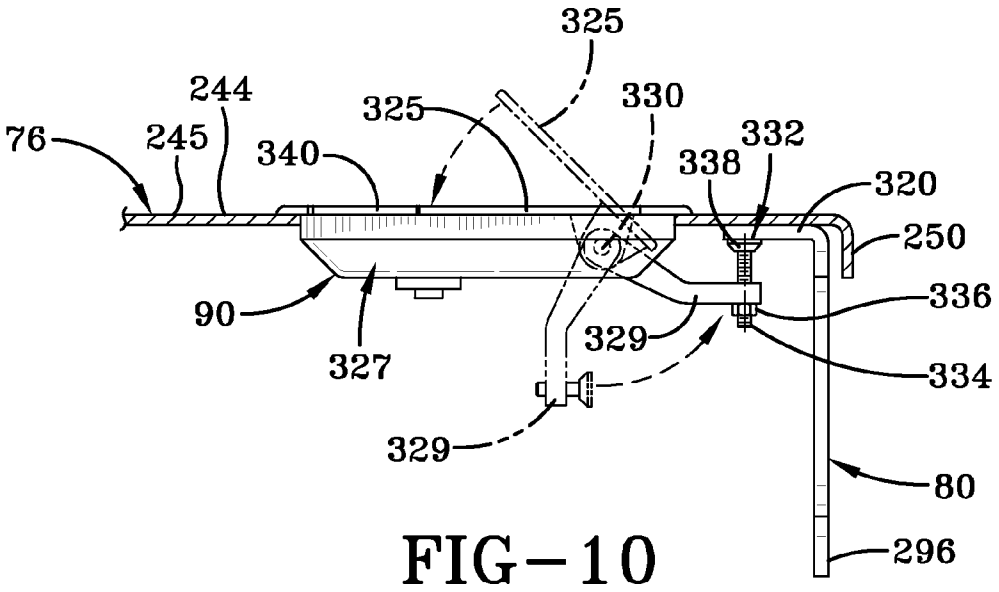
325
244
330
325
332
76
245
340
338
320
250
336
90
329
327
334
329
80
296

FIG-10

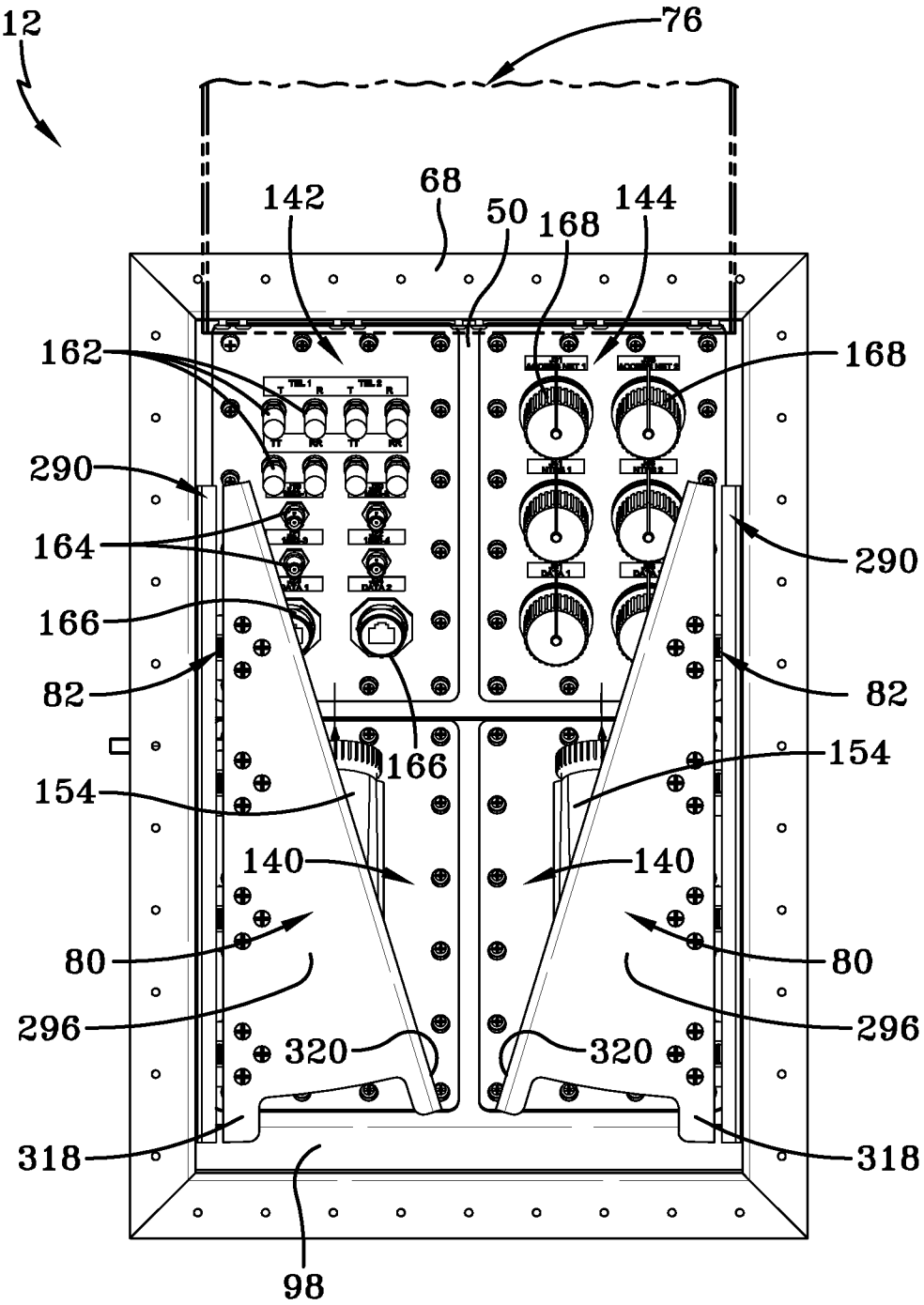
12
76
68
142
50
168
144
162
168
290
164
290
166
82
82
166
154
154
140
140
80
80
296
296
320
320
318
318
98

FIG-11

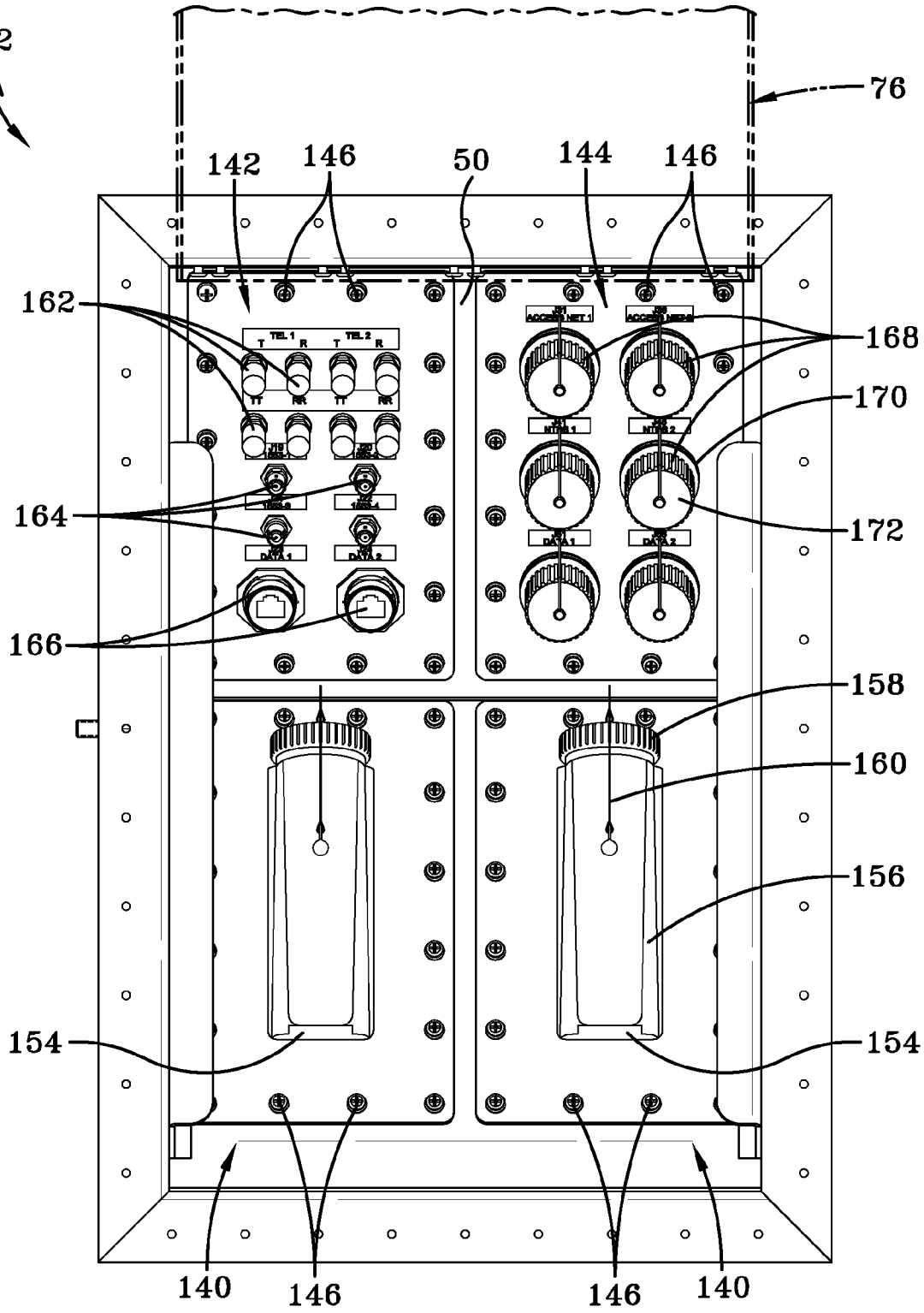
12
76
142
146
50
144
146
162
168
170
164
172
166
158
160
156
154
154
140
146
146
140

FIG-12

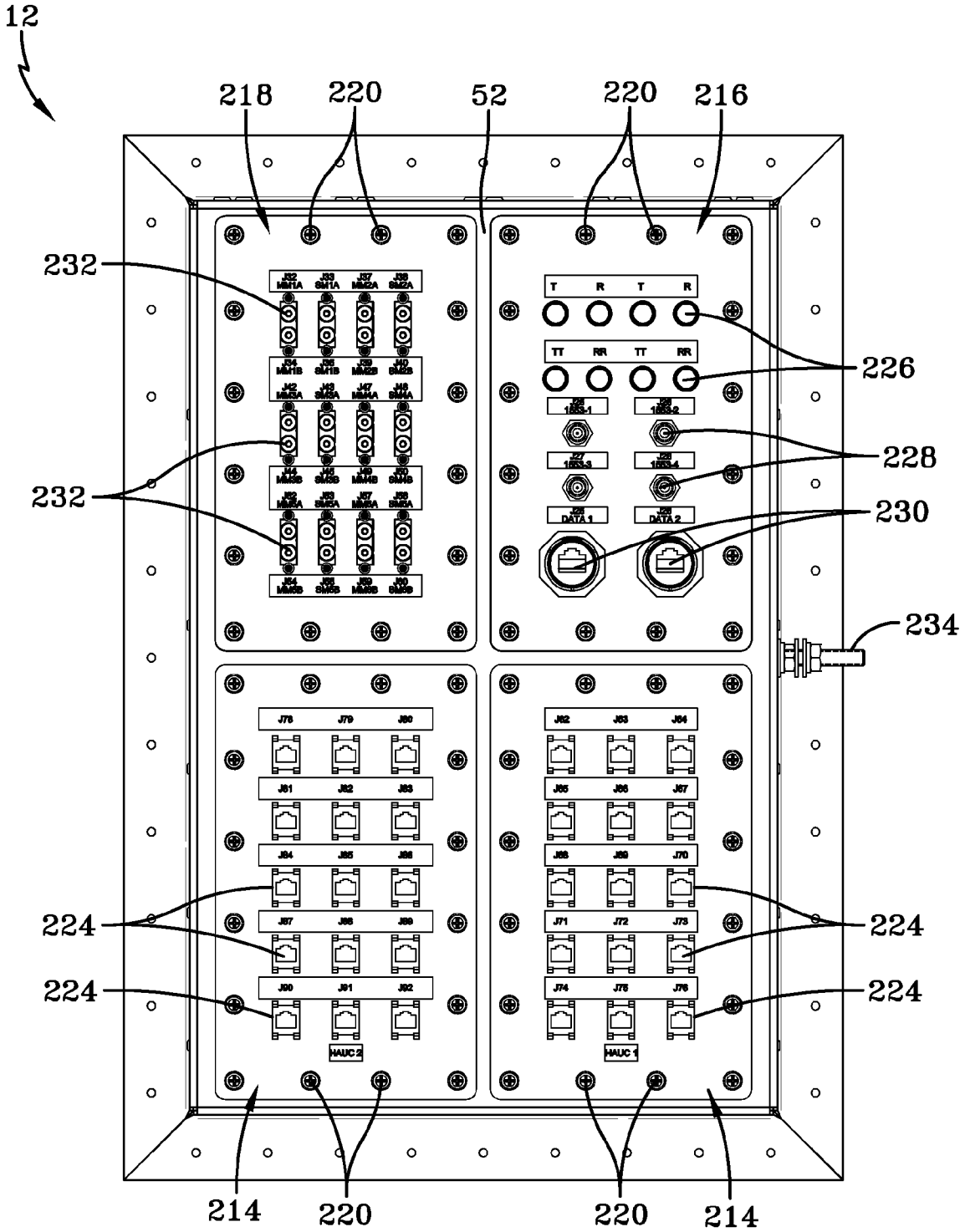
12
218
220
52
220
216
232
232
226
228
230
234
224
224
224
224
214
220
220
214

FIG-13

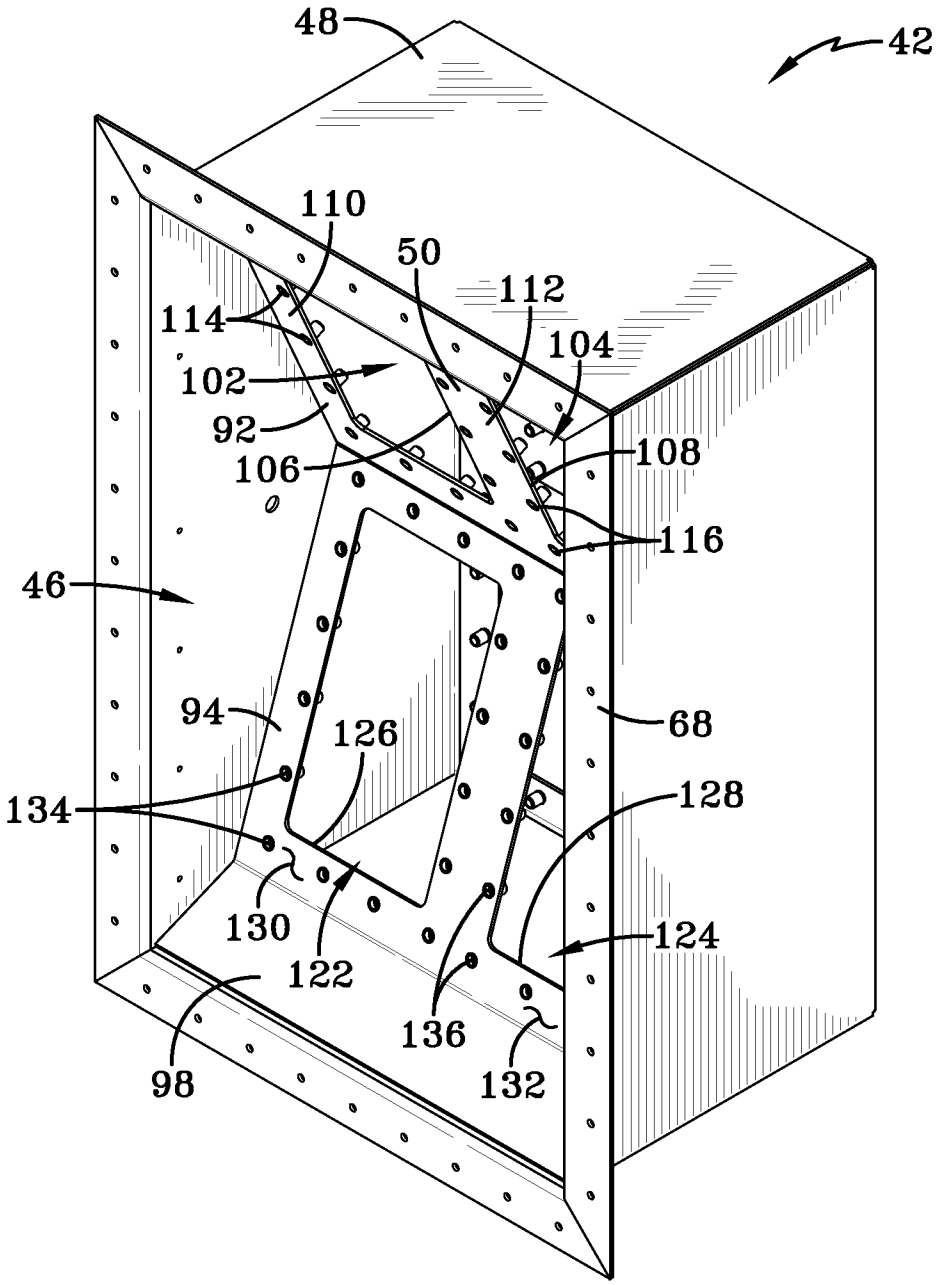
48
42
110
50
112
114
104
102
92
106
108
116
46
94
126
68
134
128
130
122
124
136
98
132

FIG–14

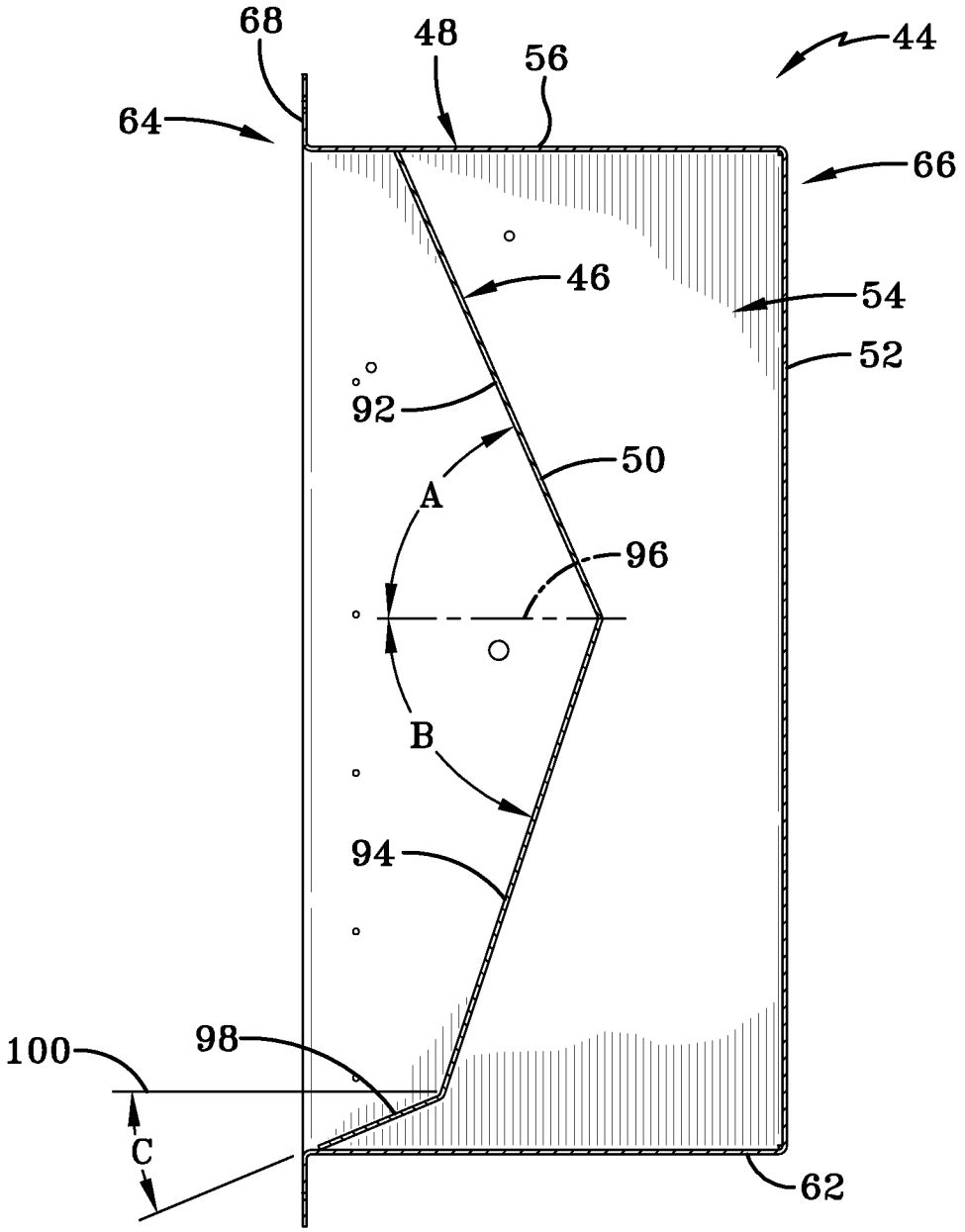

FIG-15

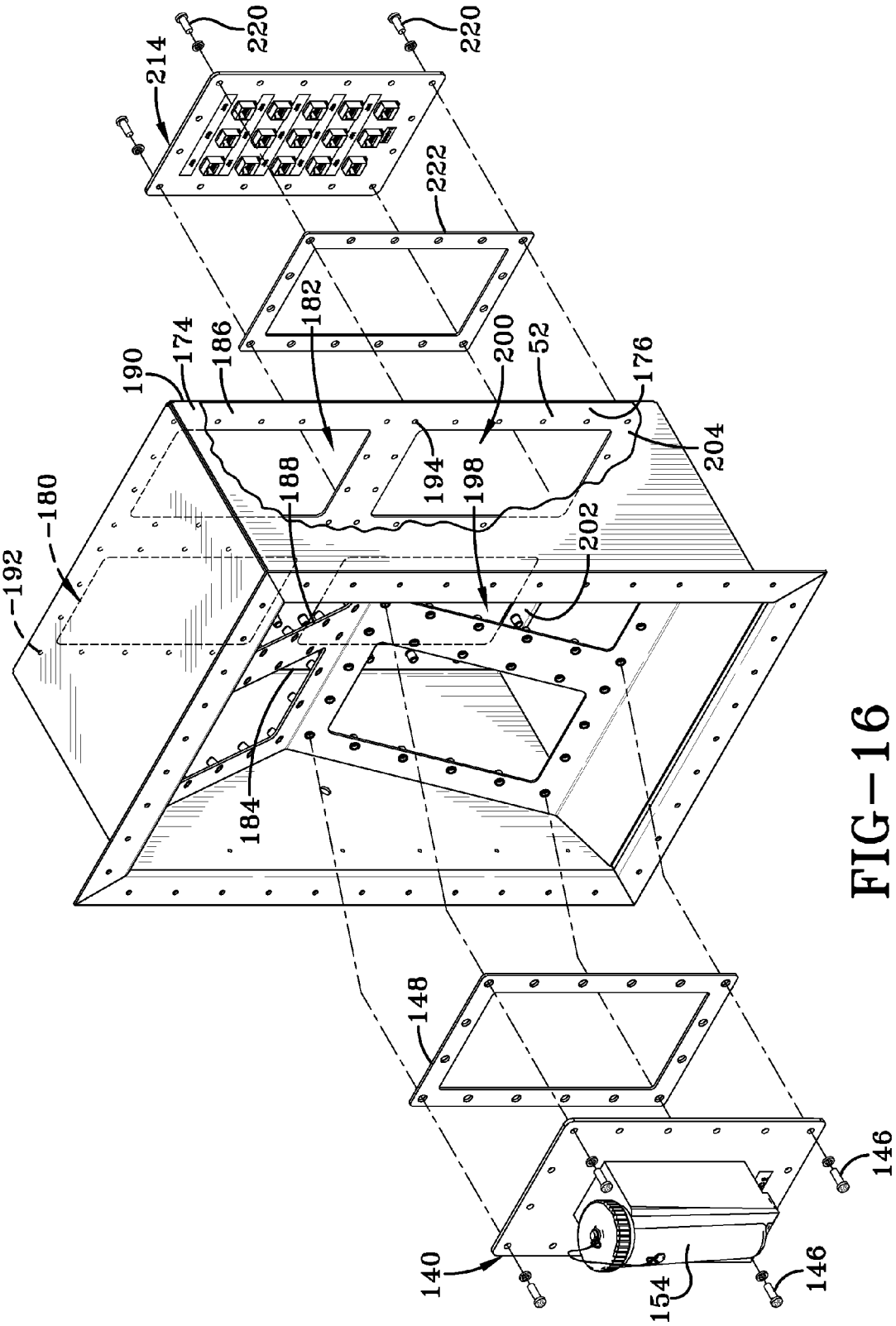
220
220
214
222
182
174
186
190
200
52
176
204
188
194
198
180
192
202
184
148
146
140
154
146

FIG-16

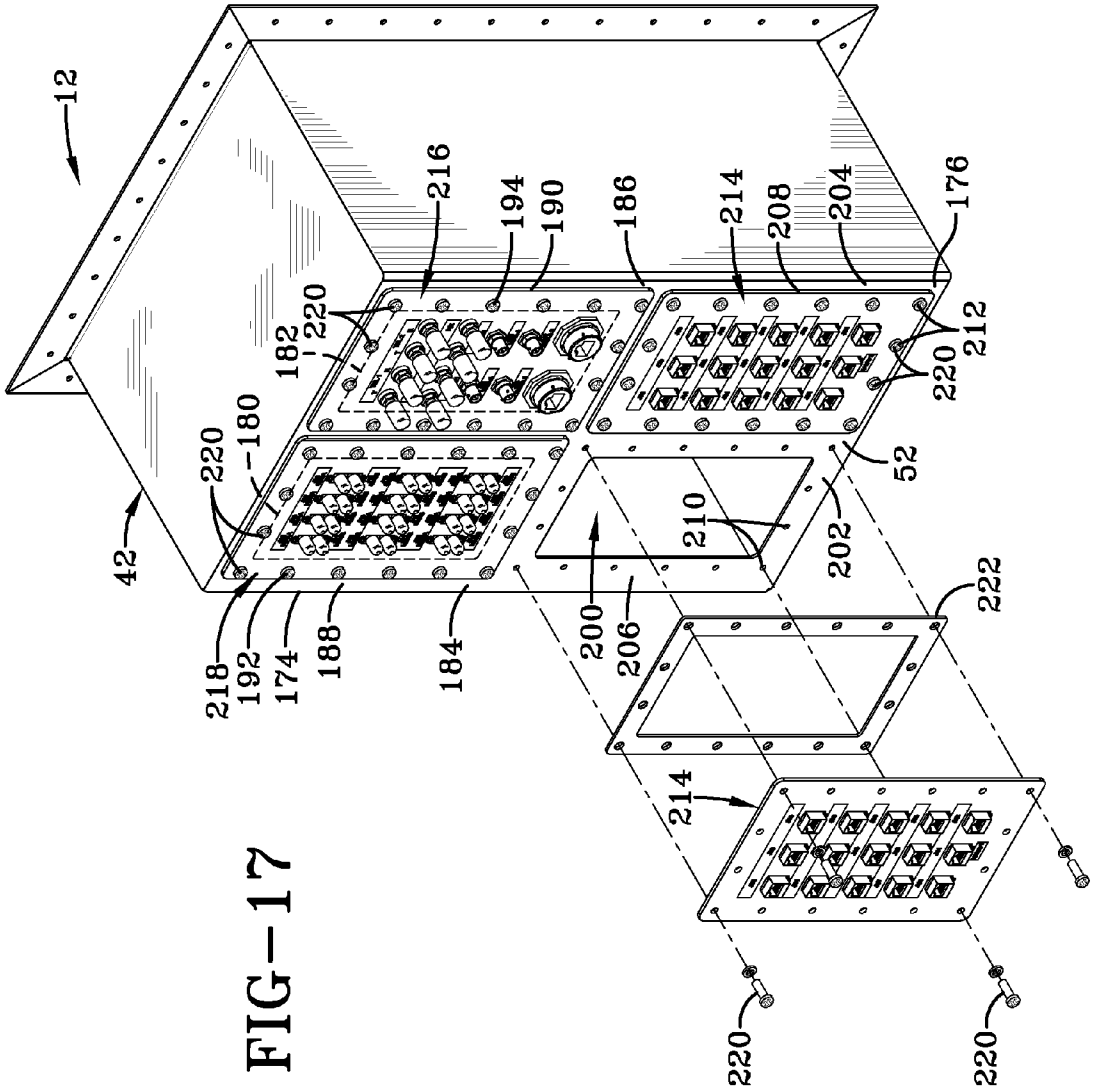
12
42
216
194
190
186
214
208
204
176
220
182
212
220
180
220
52
210
202
222
218
192
174
188
184
200
206
214
220
220

FIG-17

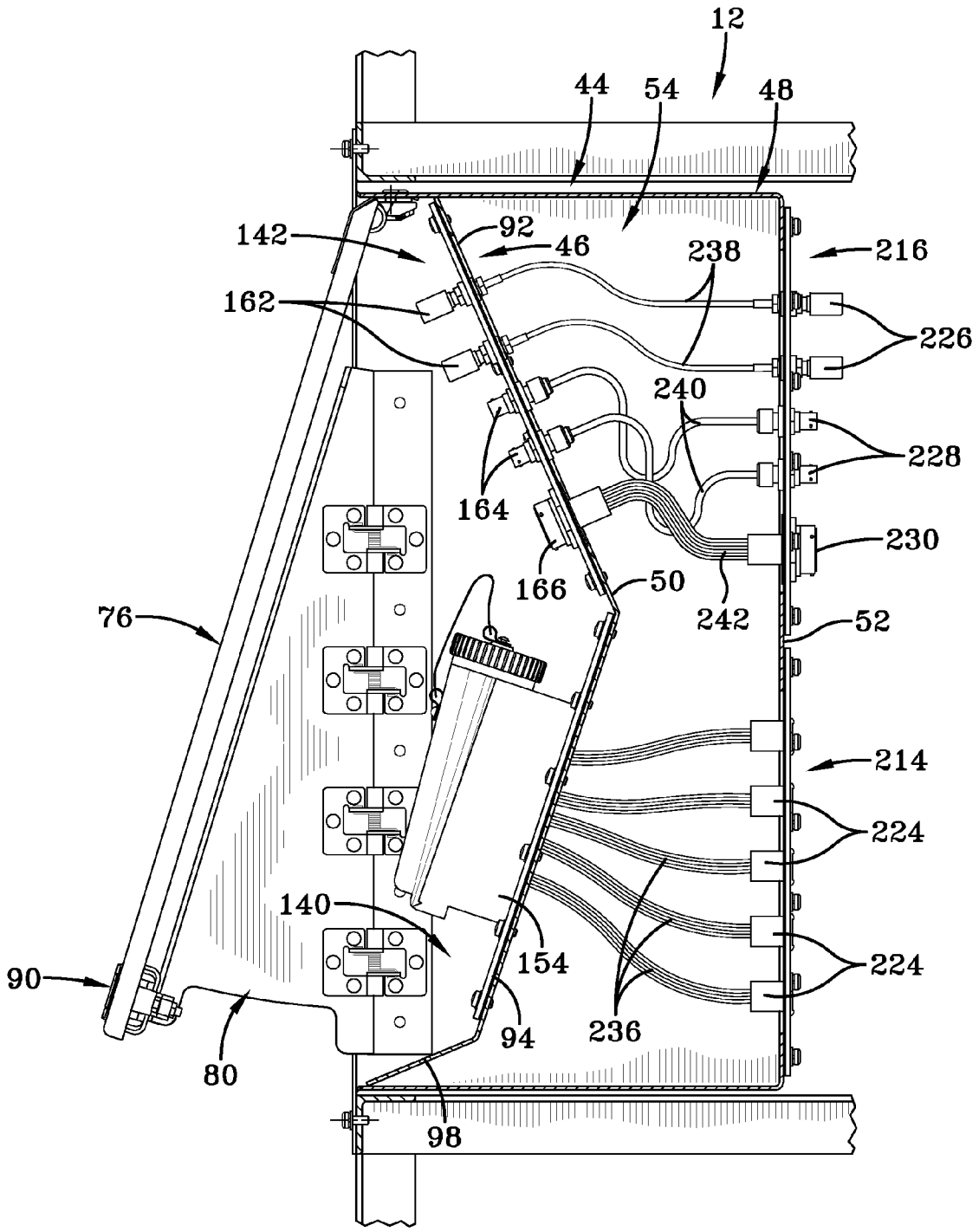
12
44
54
48
142
92
46
238
216
162
226
240
228
164
230
166
50
242
76
52
214
224
140
154
224
90
94
236
80
98

FIG–18

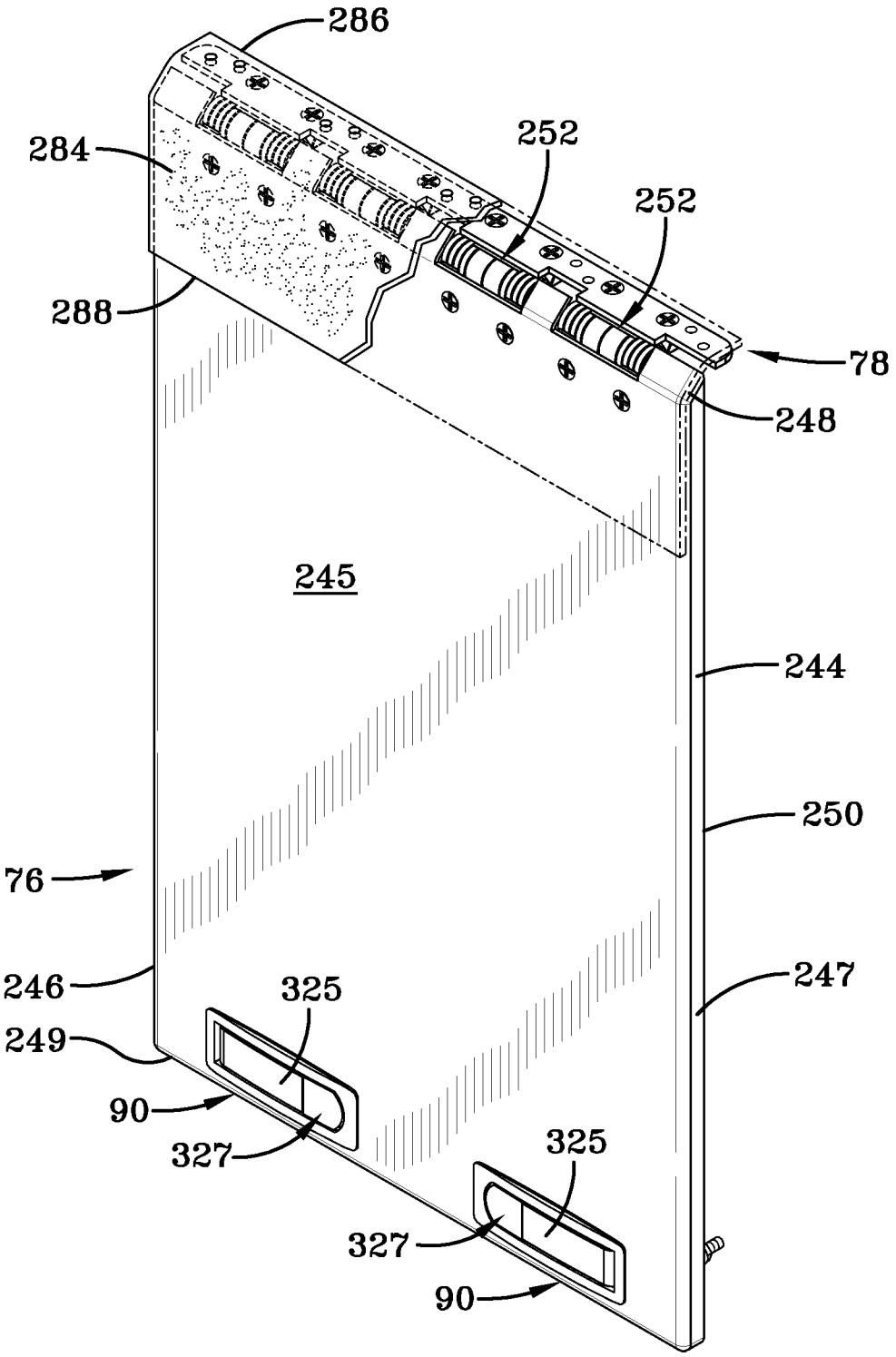
286
284
252
252
288
78
248
245
244
250
76
246
247
325
249
90
327
325
327
90

FIG–19

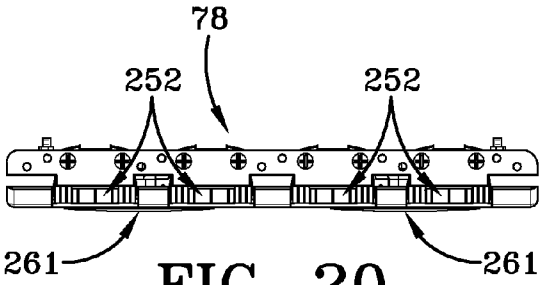

FIG-20

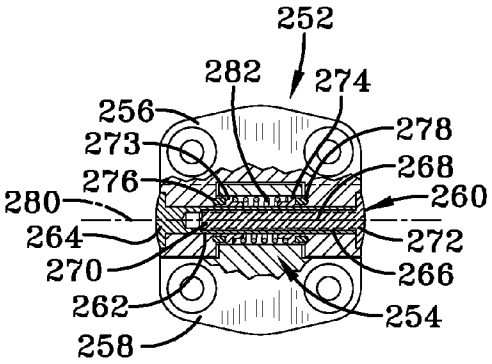

FIG-23

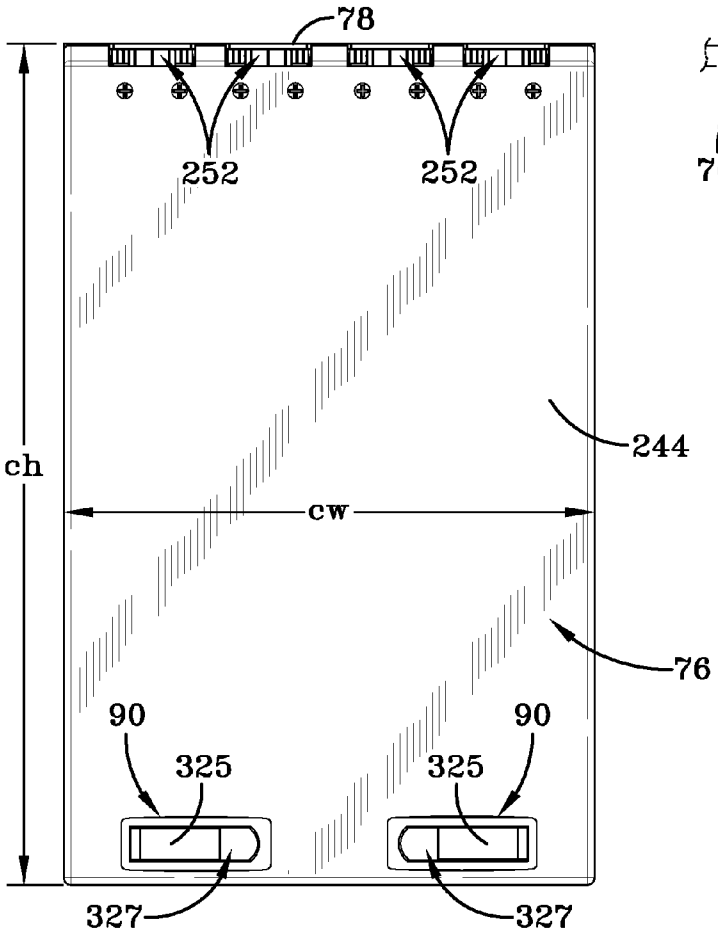

FIG-21

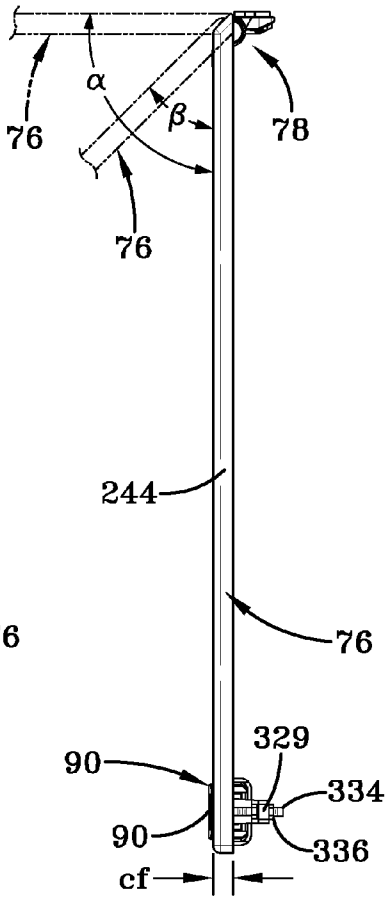

FIG-22

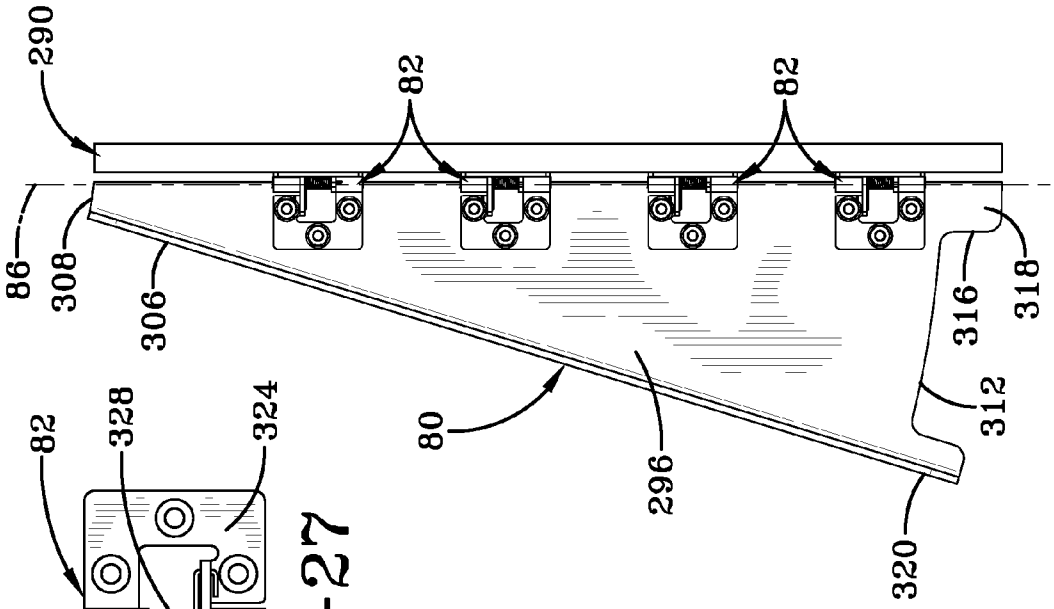

FIG-26

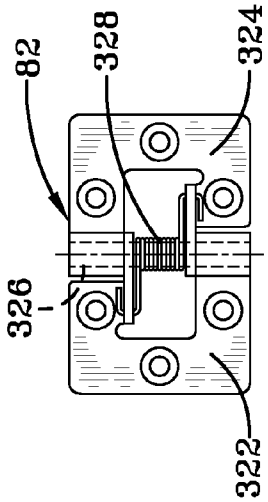

FIG-27

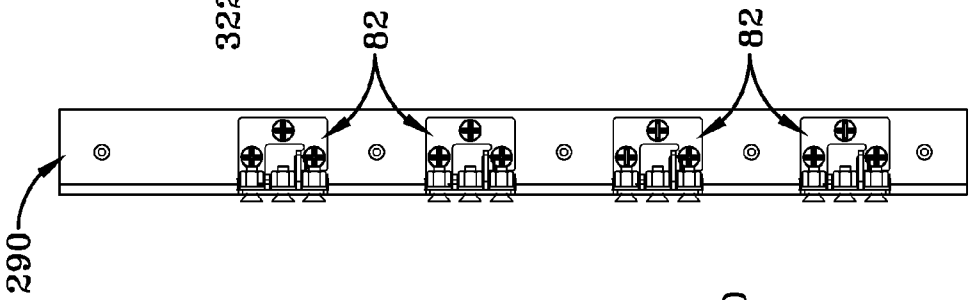

FIG-25

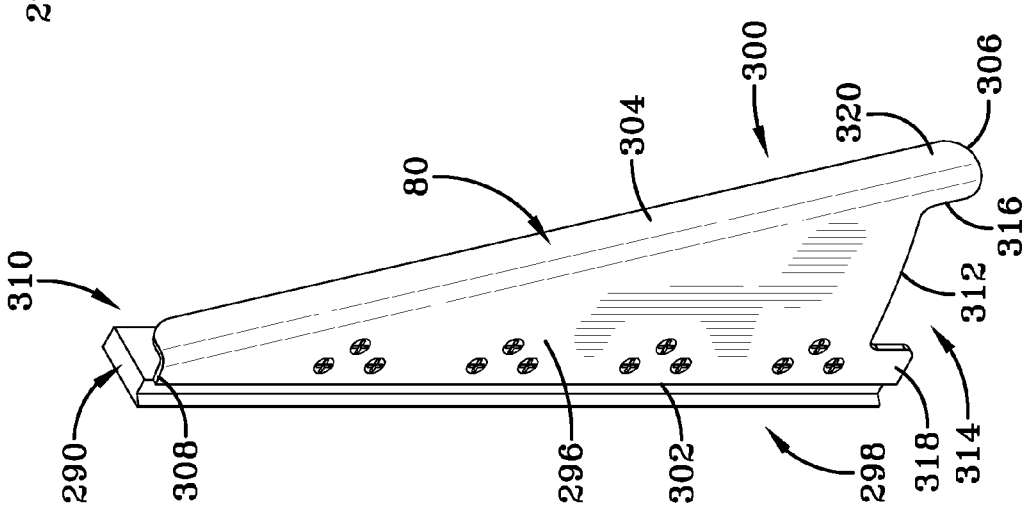

FIG-24

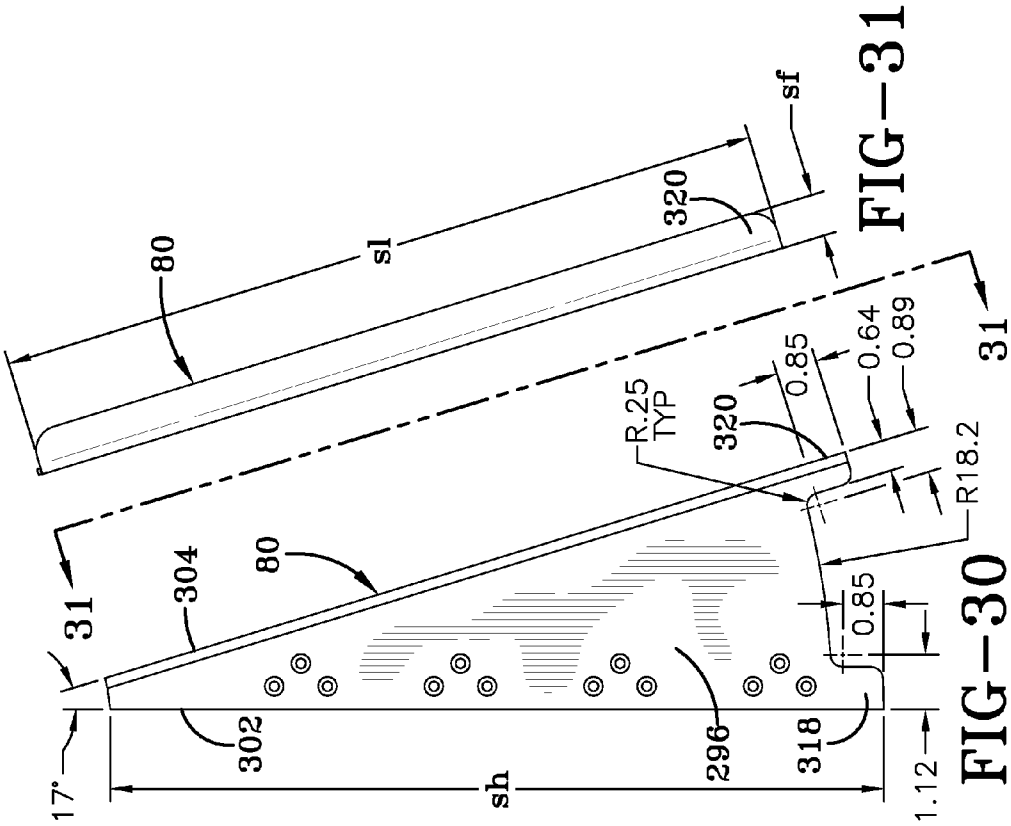

FIG-31

FIG-30

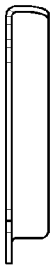

FIG-32

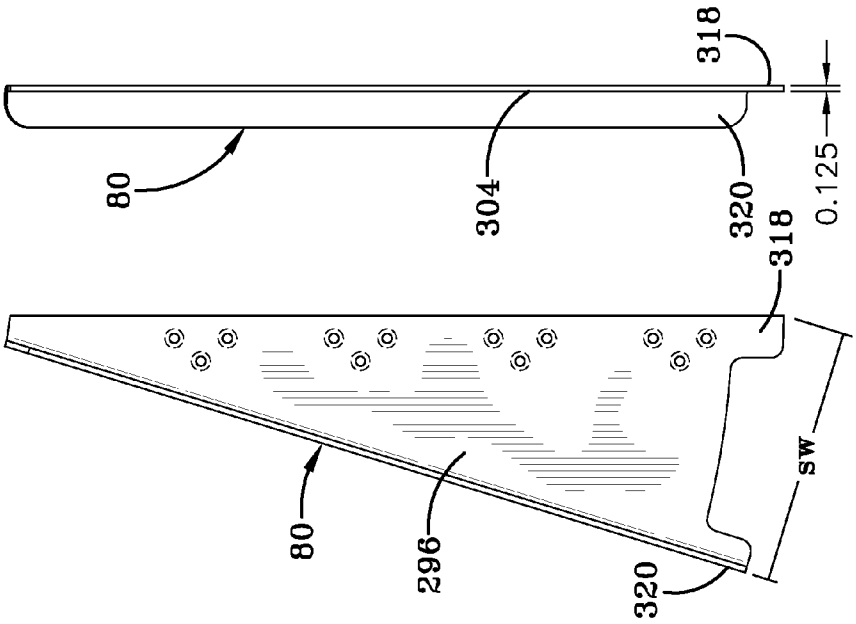

FIG-29

FIG-28

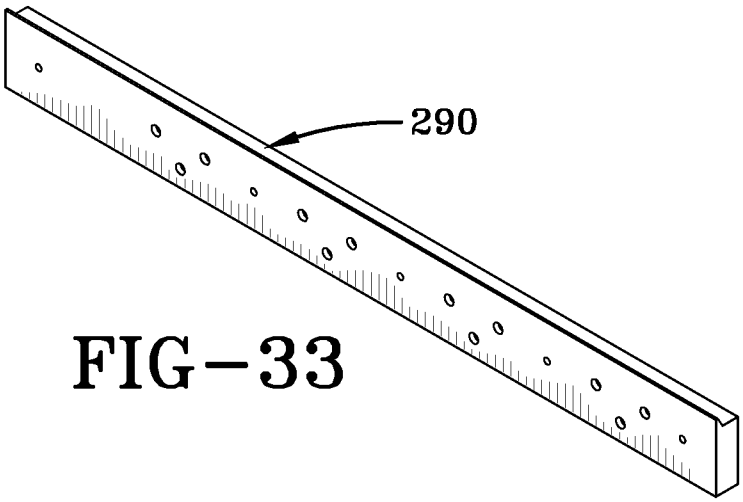

FIG-33

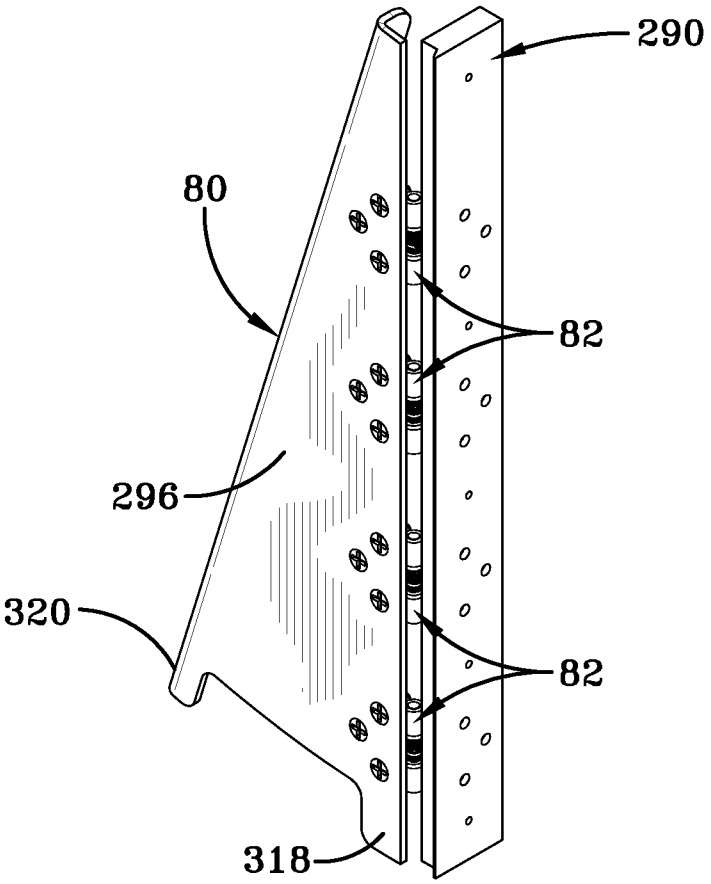

FIG-34

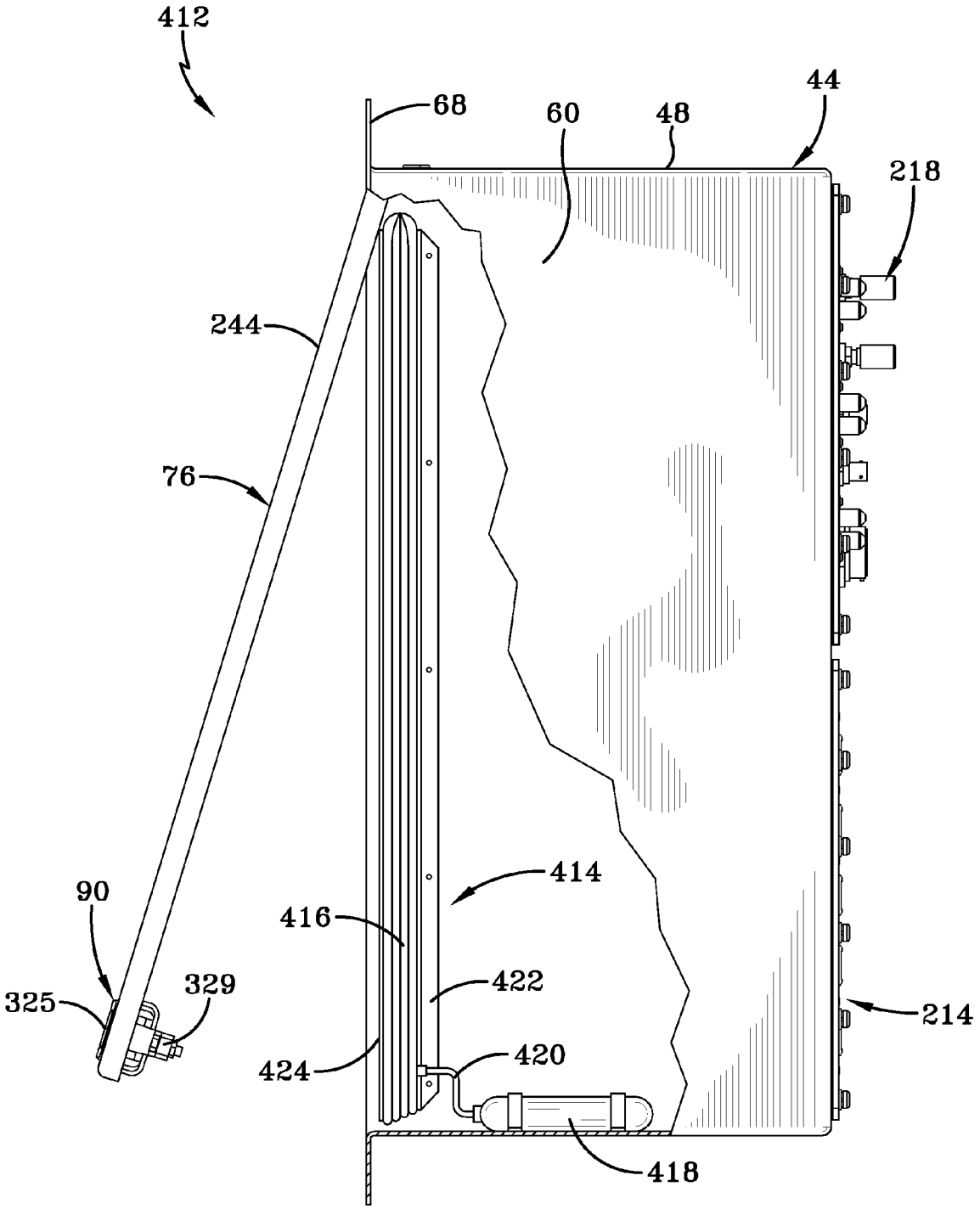

FIG-35

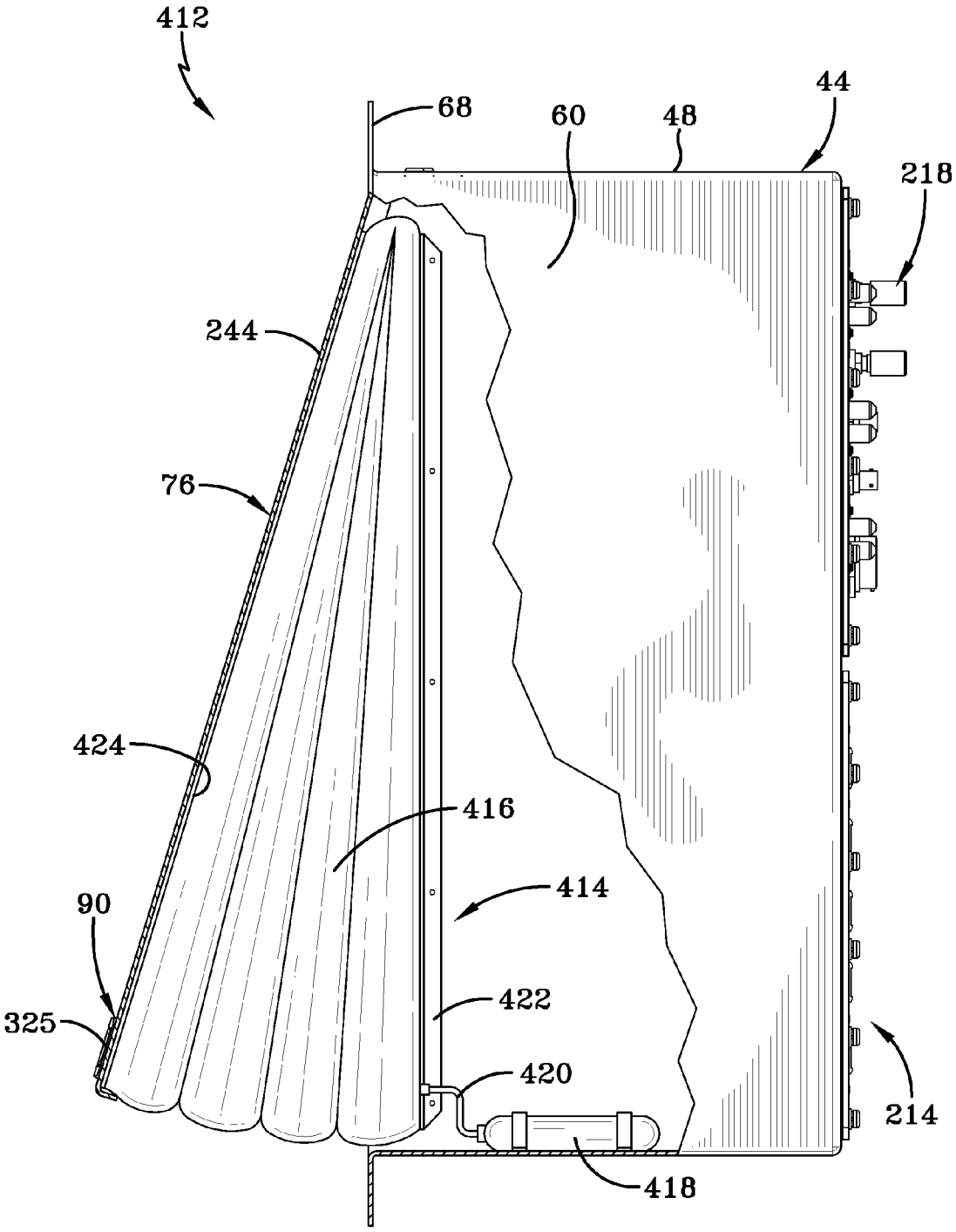

FIG-36

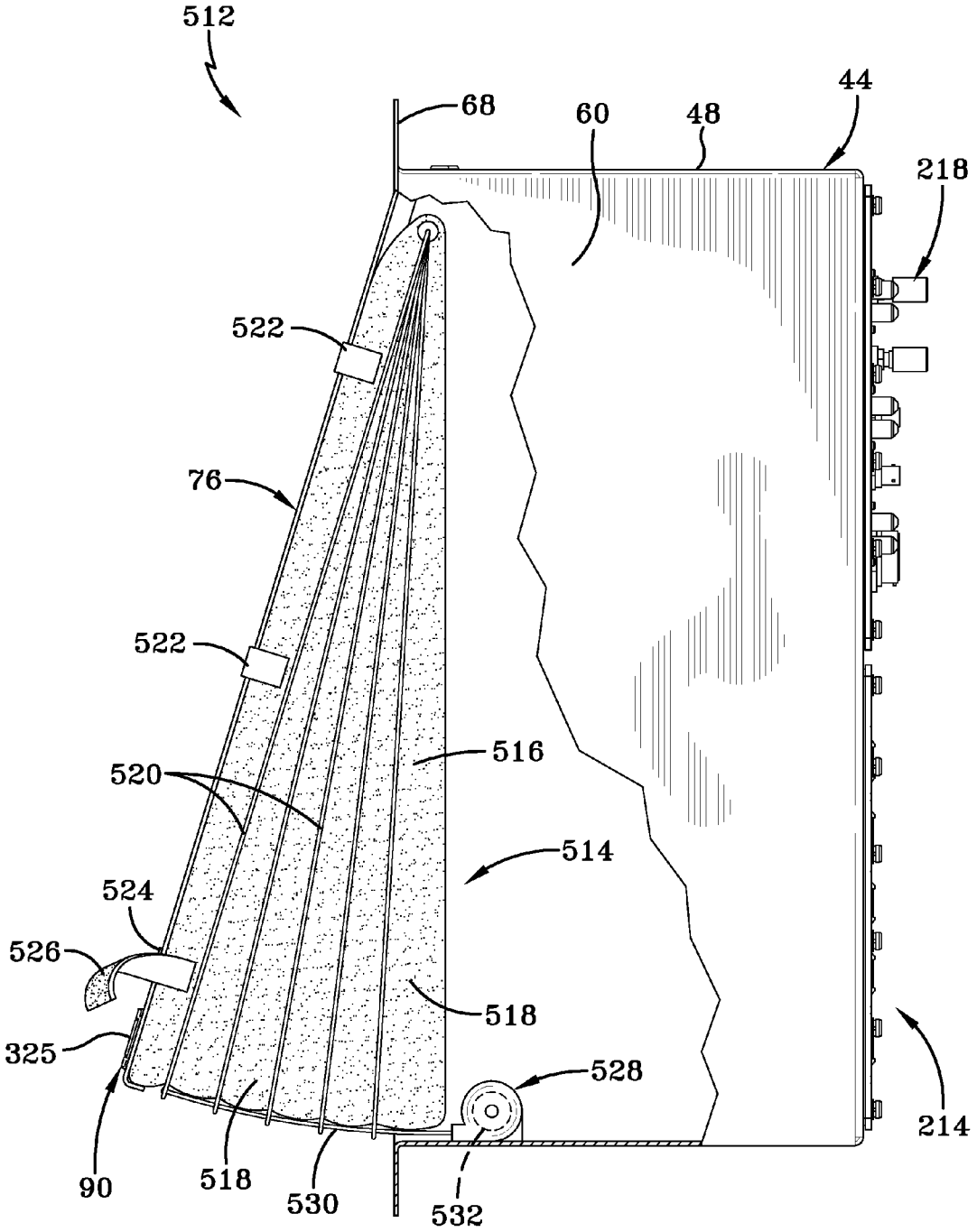
512
68
60
48
44
218
522
76
522
516
520
514
524
526
518
325
528
214
90
518
530
532

FIG-37

PROTECTIVE MEMBERS FOR AN ELECTRICAL INTERFACE ASSEMBLY

CROSS-REFERENCE TO RELATED APPLICATIONS

[0001] The present application claims priority to U.S. patent application Ser. No. 12/696,778, filed Jan. 29, 2010, entitled "PROTECTIVE MEMBERS FOR AN ELECTRICAL INTERFACE ASSEMBLY," the disclosure of which is expressly incorporated by reference herein.

STATEMENT REGARDING FEDERALLY SPONSORED RESEARCH OR DEVELOPMENT

[0002] The invention described herein was made in the performance of official duties by employees of the Department of the Navy and may be manufactured, used and licensed by or for the United States Government for any governmental purpose without payment of any royalties thereon.

BACKGROUND AND SUMMARY OF THE DISCLOSURE

[0003] The present invention relates generally to structures configured to shield electrical interface panels and, more particularly, to a protective structure including a pivotable cover and cooperating side wings to shield signal entry panels from environmental elements such as water and sand.

[0004] It is known to provide mobile communication structures including a plurality of external electrical interfaces, such as signal entry panels. Such signal entry panels are often uncovered and thereby exposed to environmental elements, such as rain, snow, soil, sand, and debris. Such exposure may interfere with the operation of the signal entry panels by disrupting with electrical connections therewith and causing intermittent failures. Furthermore, it is often desired to quickly modify the number and/or types of electrical connections supported by the signal entry panels, often in remote locations.

[0005] According to an illustrative embodiment of the present disclosure, a signal interface assembly includes a support, a first movable member, and a first hinge coupled to a first portion of the support and a side of the first movable member. At least one latching mechanism is coupled to the first movable member. The signal interface assembly further includes at least one second movable member, and a second hinge coupled to a second portion of the support and the at least one second movable member. The at least one latching mechanism is configured to secure the at least one second movable member to the first movable member in at least two different relative configurations.

[0006] Illustratively, the support includes an inner frame and an outer frame positioned in spaced relation to the inner frame and defining a chamber therebetween. An inner electrical interface panel is illustratively supported by the inner frame, and an outer electrical interface panel is illustratively supported by the outer frame. Further illustratively, the first movable member includes a cover having a side flange and being pivotable about a horizontal axis between a stowed position and a deployed position. The at least one second movable member illustratively includes a side wing having a first edge and a second edge and being pivotable about a vertical axis between a stowed position and a deployed position. Illustratively, the first edge of the side wing is positioned adjacent to the side flange of the cover in the stowed position, and the second edge of the side wing is positioned adjacent the side flange in the deployed position.

[0007] According to another illustrative embodiment of the present disclosure, a method of accessing a signal interface assembly is provided, including the steps of releasing a latching mechanism securing a cover to a first section of a side wing, pivoting the cover upwardly about a horizontal axis, and pivoting the side wing outwardly about a vertical axis. The method further includes the steps of positioning the cover above the side wing, and engaging the latching mechanism to secure the cover to a second section of the side wing.

[0008] Additional features and advantages of the present invention will become apparent to those skilled in the art upon consideration of the following detailed description of the illustrative embodiment exemplifying the best mode of carrying out the invention as presently perceived.

BRIEF DESCRIPTION OF THE DRAWINGS

[0009] The foregoing aspects and many of the attendant advantages of this invention will become more readily appreciated as the same become better understood by reference to the following detailed description when taken in conjunction with the accompanying drawings.

[0010] FIG. **1** is a side view of a vehicle including an illustrative electrical interface assembly of the present disclosure;

[0011] FIG. **2** is a perspective view of the shelter assembly carried by the vehicle of FIG. **1**;

[0012] FIG. **3** is a perspective view of the illustrative electrical interface assembly shown in FIG. **1**;

[0013] FIG. **4** is a view similar to FIG. **3** of the electrical interface assembly, with the cover shown in phantom in a fully raised position, the side wings shown in a stowed position, and the interface panels removed for clarity;

[0014] FIG. **5** is a view similar to FIG. **4**, showing the side wings shown in a deployed position;

[0015] FIG. **6** is a view similar to FIG. **5**, with the cover shown in phantom in a deployed position;

[0016] FIG. **7** is a top plan view of the electrical interface assembly of FIG. **3**;

[0017] FIG. **8** is a front view of the electrical interface assembly of FIG. **7**;

[0018] FIG. **9** is a cross-sectional view taken along line **9-9** of FIG. **6**;

[0019] FIG. **10** is a cross-sectional view taken along line **10-10** of FIG. **8**;

[0020] FIG. **11** is a front plan view similar to FIG. **8**, showing the side wings in a stowed position and the cover in phantom in a fully raised position;

[0021] FIG. **12** is a front plan view similar to FIG. **11**, showing the side wings in a deployed position;

[0022] FIG. **13** is a rear view of the electrical interface assembly of FIG. **7**;

[0023] FIG. **14** is a perspective view similar to FIG. **4**, with the cover and side wings removed for clarity;

[0024] FIG. **15** is a cross-sectional view taken along line **15-15** of FIG. **14**;

[0025] FIG. **16** is a front exploded perspective view, with a partial cut-away, showing illustrative mounting arrangements for an external electrical interface panel and an internal electrical interface panel;

[0026] FIG. **17** is a rear exploded perspective view showing an illustrative mounting arrangement for internal electrical interface panels;

[0027] FIG. **18** is a cross-sectional view similar to FIG. **15**, showing the interconnections between external electrical interface panels and internal electrical interface panels;

[0028] FIG. **19** is a perspective view of the cover of the electrical interface assembly of FIG. **3**;

[0029] FIG. **20** is a top plan view of the cover of FIG. **19**;

[0030] FIG. **21** is a front view of the cover of FIG. **19**;

[0031] FIG. **22** is a side elevational view of the cover of FIG. **19**, showing fully raised and deployed positions in phantom;

[0032] FIG. **23** is a detail view, with a partial cut-away, of a side wing hinge;

[0033] FIG. **24** is a perspective view of a side wing of the electrical interface assembly of FIG. **3**;

[0034] FIG. **25** is an end view of the side wing of FIG. **24**;

[0035] FIG. **26** is a side elevational view of the side wing of FIG. **24**;

[0036] FIG. **27** is a detail view of a side wing hinge of FIG. **24**;

[0037] FIG. **28** is a first side elevational view of a side wing body of FIG. **24**;

[0038] FIG. **29** is a first end view of the side wing body of FIG. **28**;

[0039] FIG. **30** is a second side elevational view of the side wing body of FIG. **28**;

[0040] FIG. **31** is a second end view of the side wing body of FIG. **28**, taken along line **31-31** of FIG. **30**;

[0041] FIG. **32** is a bottom plan view of the side wing body of FIG. **30**;

[0042] FIG. **33** is a perspective view of a side wing standoff of FIG. **24**;

[0043] FIG. **34** is a perspective view of a further side wing of the electrical interface assembly of FIG. **3**;

[0044] FIG. **35** is a side elevational view, with a partial cut-away, of a further illustrative embodiment electrical interface assembly of the present disclosure;

[0045] FIG. **36** is a view similar to FIG. **35**, showing the cover in a deployed position; and

[0046] FIG. **37** is a side elevational view, with a partial cut-away thereof, of a further illustrative electrical interface assembly of the present disclosure.

[0047] Corresponding reference characters indicate corresponding parts throughout the several views. Although the drawings represent embodiments of various features and components according to the present disclosure, the drawings are not necessarily to scale and certain features may be exaggerated in order to better illustrate and explain the present disclosure. The exemplification set out herein illustrates embodiments of the invention, and such exemplifications are not to be construed as limiting the scope of the invention in any manner.

DETAILED DESCRIPTION OF THE DRAWINGS

[0048] For the purposes of promoting an understanding of the principles of the invention, reference will now be made to the embodiments illustrated in the drawings, which are described below. The embodiments disclosed below are not intended to be exhaustive or limit the invention to the precise form disclosed in the following detailed description. Rather, the embodiments are chosen and described so that others skilled in the art may utilize their teachings. It will be understood that no limitation of the scope of the invention is thereby intended. The invention includes any alterations and further modifications in the illustrated devices and described methods and further applications of the principles of the invention which would normally occur to one skilled in the art to which the invention relates.

[0049] Referring initially to FIGS. **1** and **2**, a mobile structure, illustratively a vehicle **10**, is shown as including a plurality of electrical interface assemblies **11**. The vehicle **10** illustratively includes a plurality of ground engaging members **14** which support **44** a frame **16**. While the ground engaging members **14** are shown as comprising tires and wheels, other ground engaging members such as tracks or sleds may be employed. The invention is equally applicable to a wide variety of mobile structures (e.g., water floatation devices) as well as fixed structures (e.g., buildings).

[0050] In the illustrative embodiment, a shelter assembly **18** is supported by the frame **16** and includes a pivotally mounted mast assembly **20**. The mast assembly **20** may support various antennae for transmitting and receiving radio frequency signals. Additional details of the mast assembly **20** are provided in U.S. Provisional Patent Application Ser. No. 61/291,694, filed Dec. 31, 2009, entitled "VEHICLE AND MAST MOUNTING ASSEMBLY THEREFOR," the disclosure of which has been expressly incorporated by reference herein.

[0051] Referring further to FIG. **2**, the shelter assembly **18** illustratively includes an enclosure **22** having a top wall **24**, a front wall **26**, side walls **28** and **30**, and a rear wall **32**. Shelter assembly **18** may also include a work platform **34** including a hoist **36**, as well as a plurality of antenna **38** positioned around the enclosure **22**. A plurality of electrical interface assemblies **11** may be supported within one or more of the walls **26**, **28**, **30**, and **32** of the enclosure **22**.

[0052] With reference to FIGS. **3-8**, an illustrative electrical interface assembly **11**, such as a signal interface assembly **12**, is shown removed from the enclosure **22**. The signal interface assembly **12** is illustratively configured to provide for simple and efficient electrical communication between an exterior **40** of the enclosure **22** and an interior **42** of the enclosure **22** (FIG. **3**). More particularly, the signal interface assembly **12** permits electrical communication between equipment external to the enclosure **22** and equipment received within the enclosure **22**. Such electrical communication may be user defined, and illustratively may include telecommunication signals (e.g. radio frequency signals and data transmissions), electrical power transmissions, etc. As indicated above, the signal interface assembly **12** may be positioned within a vertical support structure, such as vertical wall **26**, **28**, **30**, **32** of the enclosure **22**.

[0053] The signal interface assembly **12** illustratively includes a support **44** having a frame **46** coupled to a housing **48**. The frame **46** is illustratively formed of a durable material, such as aluminum, and includes an outer support, such as outer frame or mounting bracket **50**, spaced apart from an inner support, such as inner frame or mounting bracket **52**. A chamber **54** is defined between the outer frame **50** and the inner frame **52** (FIGS. **4**, **5**, and **18**). The housing **48** is illustratively coupled to the frame **46**, for example, by welding, and includes a top wall **56**, side walls **58** and **60**, and a bottom wall **62**. As with the frame **46**, the housing **48** is illustratively formed of a durable material, such as aluminum. In certain

illustrative embodiments, one or both of outer frame **50** and the inner frame **52** may be formed integral with the housing **48**.

[0054] The housing **48** illustratively includes an outer end **64** and an inner end **66**, wherein the chamber **54** is positioned intermediate the ends **64** and **66**. A mounting flange **68** is coupled to the outer end **64** of the housing **48** and includes a plurality of mounting apertures **70**. Fasteners, such as rivets **72** (FIG. **1**) may extend through the apertures **70** for securing the signal interface assembly **12** to the enclosure **22**.

[0055] A first movable member, illustratively a cover **76**, is pivotably coupled to the support **44** through a first hinge **78**. A pair of second movable members, illustratively side wings **80**, are pivotably coupled to the support **44** through a plurality of second hinges **82**. The first hinge **78** permits pivoting movement of the cover **76** about a horizontal axis **84** (FIG. **3**), while the second hinges **82** permit pivoting movement of the side wings **80** about respective vertical axes **86** (FIG. **4**). As further detailed herein, the cover **76** pivots upwardly from a stowed position to a raised position (including a deployed position), and the side wings **80** pivot outwardly from stowed positions to deployed positions. A pair of latching mechanisms **90** are illustratively coupled to the cover **76** and are configured to secure together the cover **76** and respective side wings **80** when positioned in the stowed and deployed configurations.

[0056] With reference to FIGS. **6**, **14**, and **15**, the outer frame **50** includes an upper frame member **92** coupled to a lower frame member **94**. Both the upper frame member **92** and the lower frame member **94** are angled relative to each other and to a horizontal axis **96**. As shown in the illustrative embodiment of FIG. **15**, the upper frame member **92** is angled upwardly from the horizontal axis **96** by angle A (illustratively 66 degrees), while the lower frame member **94** is angled downwardly from the horizontal axis **96** by angle B (illustratively 72 degrees). A deflector **98** is coupled to the lower frame member **94** and is configured to prevent water from collecting at the bottom of the signal interface assembly **12**. As shown in the illustrative embodiment of FIG. **15**, the deflector **98** is angled downwardly from a horizontal axis **100** by an angle C (illustratively 23 degrees) for directing water downwardly and outwardly from the signal interface assembly **12**.

[0057] With reference to FIG. **14**, the upper frame member **92** includes first and second openings **102** and **104** defined by rectangular mounting flanges **106** and **108**, respectively. Outer surfaces of the mounting flanges **106** and **108** define respective gasket seats **110** and **112**. A plurality of mounting apertures **114** and **116** extend through each mounting flange **106** and **108**, respectively.

[0058] The lower frame member **94** includes first and second openings **122** and **124** defined by rectangular mounting flanges **126** and **128**, respectively. Outer surfaces of mounting flanges **126** and **128** define respective gasket seats **130** and **132**. A plurality of mounting apertures **134** and **136** extend through each mounting flange **126** and **128**, respectively.

[0059] With reference to FIGS. **11** and **12**, a plurality of outer or external electrical interface panels, illustratively signal entry panels **140**, **142**, and **144**, are removably coupled to the outer frame **50** by a plurality of releasable couplers or fasteners, illustratively bolts **146** received within the mounting apertures **114**, **116**, **134**, **136** of the respective frame members **92** and **94**. An electromagnetic interference (EMI) gasket **148** is received intermediate each signal entry panel **140**, **142**, **144** and its respective gasket seat **110**, **112**, **130**, **132**. The EMI gasket **148** is illustratively formed of an electrically conductive material, such as wire mesh material. In one illustrative embodiment, the EMI gasket **148** comprises a carbon-filled cellular PTFE matrix **150**. A pressure sensitive adhesive (PSA) **152** may be supported by a rear surface of the matrix **150**.

[0060] Each outer signal entry panel **140**, **142** and **144** may be customized with a variety of different electrical connectors or ports as desired by the user for providing electrical communication with components external to the shelter assembly **18**. As further detailed herein, the outer signal entry panels **140**, **142**, **144** are modular and may be easily removed and replaced with other electrical interface panels. While illustrative outer signal entry panels **140**, **142**, and **144** are shown to include certain types, arrangements, and numbers of electrical connectors, it should be appreciated that a wide variety of substitutions may be made therefor.

[0061] In the illustrative embodiment, outer signal entry panel **140** each include a telephone HAUC connector **154**. HAUC connectors **154** are known and include a housing **156** supporting a receptacle for mating with a telephone, illustratively a handset including a microphone and a speaker (not shown). A cap **158** is removably coupled to the housing **156**, while a cable **160** retains the cap **158** to the housing **156** (FIG. **12**). The signal entry panel **142** illustratively includes a plurality of telephone push pins **162**, and data ports **164** and **166**. Data ports **164** illustratively comprise Tactical Digital Information Link (TADIL) connectors, such as TADIL-J 1553 bayonet couplings. Data ports **166** illustratively comprise female cable connectors, such as category 5 (CAT-5e) cable connectors. The outer signal entry panel **144** illustratively includes a plurality of data ports **168** for coupling to fiber optic cables. Illustratively, the data ports **168** comprise Tactical Fiber Optic Cable Assembly (TFOCA-11) connectors including a housing **170** and threadably coupled protective caps **172**.

[0062] With reference to FIGS. **13**, **16**, and **17**, the inner frame **52** illustratively includes an upper frame member **174** and a lower frame member **176** disposed within a common substantially vertical plane. The upper frame member **174** includes first and second openings **180** and **182** defined by rectangular mounting flanges **184** and **186**, respectively. Outer surfaces of the mounting flanges **184** and **186** define respective gasket seats **188** and **190**. A plurality of mounting apertures **192** and **194** extend through each mounting flange **184** and **186**, respectively. The lower frame member **176** includes first and second openings **198** and **200** defined by rectangular mounting flanges **202** and **204**, respectively. Outer surfaces of the mounting flanges **202** and **204** define respective gasket seats **206** and **208**. A plurality of mounting apertures **210** and **212** extend through each mounting flange **202** and **204**, respectively.

[0063] A plurality of inner or internal electrical interface panels, illustratively signal entry panels **214**, **216**, and **218**, are removably coupled to the inner frame **52** by a plurality of releasable couplers or fasteners, illustratively bolts **220** received within the mounting apertures **192**, **194**, **210**, **212** of respective frame members **174** and **176**. An EMI gasket **222** is received intermediate each signal entry panel **214**, **216**, **218** and its respective gasket seat **188**, **190**, **206**, **208**. The EMI gaskets **222** are illustratively of a similar construction as EMI gaskets **148** detailed above.

[0064] Each inner signal entry panel **214**, **216**, **218** may be customized with a variety of different electrical connectors or

ports as desired by the user for providing electrical communication with components internal to the shelter assembly **18**. As further detailed herein, the panels **214**, **216**, **218** are modular and may be easily removed and replaced with other electrical interface panels as desired. While illustrative inner signal entry panels **214**, **216**, and **218** are shown to include certain types, arrangements, and numbers of electrical connectors, it should be appreciated that a wide variety of substitutions may be made therefor.

[0065] In the illustrative embodiment, inner signal entry panels **214** each include a plurality of telephone connectors, illustratively RJ-45 modular connectors **224**. The signal entry panel **216** illustratively includes a plurality of telephone push pins **226** and data ports **228** and **230**. Data ports **228** illustratively comprise TADIL connectors, such as TADIL-J 1553 bayonet couplings. Data ports **230** illustratively comprise female cable connectors, such as category 5 (CAT-5e) cable connectors. The signal entry panel **218** illustratively includes fiber optic couplings **232**, such as SC MMSM connectors. A ground stud **234** may also be supported by the inner frame **52**.

[0066] Electrical wires or cables **236**, **238**, **240**, **242** illustratively connect the outer signal entry panels **140**, **142**, **144** with the inner signal entry panels **214**, **216**, **218**, respectively. More particularly, the cables **236**, **238**, **240**, **242** extend between the outer frame **50** and the inner frame **52** through the chamber **54** of the support **44** as shown in FIG. **18**. The HAUC connectors **154** of outer signal entry panel **140** are illustratively coupled to the modular connectors **224** of panel **214** by cables **236**. The push pins **162** of the outer signal entry panel **142** are illustratively coupled to the push pins **226** of the inner signal entry panel **216** by cables **238**. The data ports **164** and **166** of the outer signal entry panel **142** are coupled to the data ports **228** and **230** of panel **216** by cables **240** and **242**, respectively. Similarly, the ports **168** of the outer signal entry panel **144** are illustratively coupled to the couplings **232** of the internal signal entry panel **218** through cables (not shown). As desired, lighting arrestors and filters (not shown) may be electrically coupled to the cables **236**, **238**, **240**, **242** and received within the chamber **54**.

[0067] With reference to FIGS. **19-22**, the cover **76** is pivotably coupled to the top wall **56** of the housing **48** by a first hinge **78**. The cover **76** illustratively includes a substantially planar body **244** having an outer surface **245** extending between first and second sides **246** and **247** and between opposing upper and lower ends **248** and **249**. While the body **244** of the cover **76** may be formed in a wide variety of sizes, the illustrative embodiment has a width cw of approximately 13 inches, and a height ch of approximately 20 inches (FIG. **21**). In one illustrative embodiment, the cover **76** is formed of 0.090 inch thick aluminum sheet. The first hinge **78** is coupled to the body **244** proximate the upper end **248**, while the latching mechanisms **90** are secured to the body **244** proximate the lower end **249** near opposing sides **246** and **247**. In the illustrative embodiment as shown in FIG. **22**, a peripheral lip or flange **250** extends inwardly from the body **244** by a distance cf (illustratively about 0.50 inches).

[0068] With reference to FIGS. **20** and **23**, the first hinge **78** illustratively includes a plurality of spaced apart connecting members **252**. Each connecting member **252** illustratively includes a detent assembly **254** to releasably secure the cover **76** in one of a plurality of angular positions. More particularly, the cover **76** in FIG. **22** is shown in solid in a stowed position substantially vertical (i.e., parallel with the vertical wall **26**). The cover **76** may be pivoted upwardly by angle α (illustratively about 90 degrees) to a fully raised position, and by angle β (illustratively about 45 degrees) to an intermediate deployed position.

[0069] As shown in FIG. **23**, each connecting member **252** illustratively includes a first pivot body **256** and a second pivot body **258** operably coupled together for pivoting movement by a pivot pin **260**. Torsion springs **261** may be provided to angularly bias the second pivot body **258** away from the first pivot body **256**. As such, the springs **261** assist the user in raising the cover **76**.

[0070] The pivot pin **260** of each connecting member **252** illustratively includes a first member **262** having a head **264** at a first end, and a cavity **266** at an opposing second end. A second member **268** is concentrically received within the cavity **266** of the first member **262**. More particularly, a portion **270** adjacent the first end of the second member **268** is fixed within the cavity **266**, and a head **272** is positioned adjacent the second end. The first and second members **262** and **268** are secured together such that the first and second pivot bodies **256** and **258** are captured between the heads **264** and **272**.

[0071] The detent assembly **254** illustratively includes spaced apart first and second sliders **273** and **274** configured to cooperate with recesses or detents **276** and **278**, respectively, formed within the pivot body **256**. More particularly, each slider **273**, **274** is configured to be releasably received within a cooperating detent **276**, **278** in each of the angular positions shown in FIG. **22**. The sliders **273** and **274** illustratively comprise sleeves received over the pivot pin **260** and supported for sliding movement along the longitudinal axis **280** of the pin **260**. More particularly, a spring **282** is configured to bias the sliders **273** and **274** in opposite directions along the longitudinal axis **280** and into selected ones of the detents **276** and **278**. When the sliders **273** and **274** are biased within the detents **276** and **278**, the cover **76** is releasably secured within one of the angular positions shown in FIG. **22**.

[0072] As shown in FIG. **19**, a protective flap or shield **284** may extend over the first hinge **78** to prevent environmental elements (e.g., rain, sand and dirt) from passing through gaps in the hinge **78** and to the outer signal entry panel **140**, **142** and **144**. More particularly, the protective shield **284** illustratively comprises a flexible sheet having a first or upper end **286** secured to the first hinge **78** by fasteners, such as screws, and a second or lower end **288** free to move relative to the cover **76**. Illustratively, the protective shield **284** is formed of a durable and flexible material, such as an elastomeric sheet.

[0073] With reference to FIGS. **24-34**, each side wing **80** is pivotably coupled by a plurality of second hinges **82** to a spacer or standoff **290**. In turn, each standoff **290** is secured to a side wall **58**, **60** of the housing **48** (FIG. **5**). Each standoff **290** may be formed of an elastomeric body **292** secured to the side wall **58**, **60** by a plurality of fasteners, such as screws **294**. The standoffs **290** provide clearance from the sidewalls **58** and **60** to accommodate pivoting movement of the side wings **80**.

[0074] Each side wing **80** illustratively includes a substantially planar body **296** extending between a first side **298** and a second side **300**. While the body **296** of each side wing **80** may be formed from a wide variety of rigid, durable materials, in the illustrative embodiment the body **296** is formed of 0.125 inch thick aluminum sheet. The first side **298** includes a substantially vertical edge **302**, while the second side **300** illustratively includes an angled edge **304**. The second side **300** illustratively includes an inwardly extending lip or flange

306. As shown in the illustrative embodiment of FIG. **31**, the flange **306** extends inwardly from the body **296** by a distance sf (illustratively about 0.88 inches).

[0075] With reference to FIGS. **28** and **30**, the body **296** of each side wing **80** has a substantially triangular shape with an apex **308** at an upper end **310** and a base **312** at a lower end **314**. As shown in FIG. **30**, the vertical edge **302** is illustratively angled relative to the angled edge **304** by approximately 17 degrees. The second hinges **82** are coupled to the body **296** proximate the first side **298** and provide for pivoting movement of the wings **80** from the stowed position of FIGS. **8** and **9** to the deployed position of FIGS. **6** and **10**. The base **312** includes a cut-out or notch **316** defining opposing first and second sections of the body **296**, illustratively first and second tabs **318** and **320**. The notch **316** is configured to provide clearance for a portion of the latching mechanism **90** when the cover **76** and the side wings **80** are in their stowed positions. The base **312** of the body **296** illustratively has a width sw of approximately 5.4 inches (FIG. **28**), while the vertical edge **302** illustratively has a height sh of approximately 16 inches (FIG. **30**). The angled edge **304** illustratively has a length sl of approximately 16.02 inches (FIG. **31**). Additional illustrative dimensions of the tabs **318** and **320** defining the notch **316** are shown in FIG. **30**.

[0076] With reference to FIG. **27**, each of the plurality of second hinges **82** illustratively includes a first pivot body **322** operably coupled to a second pivot body **324** by a pivot pin **326** to provide pivoting movement therebetween. The first pivot body **322** is secured to the standoff **290** while the second pivot body **324** is secured to the respective side wing **80**. A torsion spring **328** is configured to angularly bias about the pivot pin **326** the second pivot body **324** away from the first pivot body **322**. As such, the torsion spring **328** biases the respective side wings **80** outwardly about vertical axis **86** (FIG. **26**) from the stowed position (FIG. **4**) to the deployed position (FIG. **6**).

[0077] As explained above, the latching mechanisms **90** are configured to secure together the cover **76** and the side wings **80** in a plurality of configurations. More particularly, in the illustrative embodiment, the latching mechanisms **90** are configured to secure together the cover **76** and the side wings **80** in relative positions in either of their respective stowed or deployed configurations.

[0078] FIGS. **8** and **9** show locked and unlocked positions (in solid and hidden lines, respectively) of latching mechanism **90** when the cover **76** and side wings **80** are in their stowed configurations. In the stowed configurations, the cover **76** and the side wings **80** extend substantially parallel to each other and to the vertical wall **26** to define a substantially flush outer surface **323** (FIG. **1**). As further shown in the stowed configurations of FIGS. **8** and **9**, the first side **298** of each side wing **80** is positioned adjacent the flange **250** at respective sides **246** and **247** of the cover **76**. As detailed in FIG. **9**, the latching mechanisms **90** secure the first tabs **318** of each side wing **80** to the cover **76**. The standoff **290** may serve as a buffer or stop to contact the flange **250** at respective sides **246** and **247** of the cover **76**.

[0079] FIGS. **6** and **10** show locked and unlocked positions (in solid and hidden lines, respectively) of the cover **76** and the side wings **80** are in their deployed configurations. In the deployed configurations, the cover **76** is angled upwardly from its vertical position by angle β of about 45 degrees from its position of FIG. **8**. As shown in FIG. **6**, the side wings **80** are angled outwardly from their folded positions of FIG. **8** by about 90 degrees. As shown in the deployed configurations of FIGS. **6** and **10**, the second side **300** of each side wing **80** is positioned adjacent the flange **250** at the respective sides **246** and **247** of the cover **76**. As detailed in FIG. **10**, the latching mechanisms **90** secure the flange **250** at the second side tabs **320** of each side wing **80** to the cover **76**.

[0080] With further reference to FIGS. **6-10**, each latching mechanism **90** illustratively includes a handle **325** received within a recess **327** formed in the outer surface **245** of the cover **76**. A lever arm **329** is coupled to the handle **325** and is configured to pivot about a pivot pin **330**. An adjustable clamp **332** is supported at a first end of the lever arm **329**, while the handle **325** is coupled to the second end of the lever arm **329**. The clamp **332** includes a threaded stud **334** cooperating with a nut **336** for adjusting the position of a resilient bearing member **338**. The latching mechanism **90** defines an over-center clamp by the handle **325** and the lever arm **329** being positioned on opposite sides of the pivot pin **330**.

[0081] The latching mechanism **90** is in a locked or clamped position when the handle **325** is substantially parallel to the outer surface **245** of the cover **76** (shown in solid lines in FIGS. **9** and **10**). FIG. **9** shows the stowed configuration where the clamp **332** in the lock position secures the first tab **318** of the side wing **80** to the body **244** of the cover **76**. FIG. **10** shows the deployed configuration where the clamp **332** in the locked position secures the second tab **320** of the side wing **80** to the body **244** of the cover **76**. By the user inserting a finger within an opening **340** adjacent to the handle **325**, the handle **325** may be lifted or pulled outwardly away from the cover **76** such that the handle **325** and the lever arm **329** are pivoted about pivot pin **330** (to the position shown in hidden lines in FIGS. **9** and **10**). Once the cover **76** and cooperating side wings **80** are positioned as desired (i.e., stowed or deployed), the handle **325** may be pushed back into the recess **327** and flush with the outer surface **245** of the cover **76**. The lever arm **329** rotates such that the clamp **332** secures the cover **76** to the respective side wing **80**.

[0082] An illustrative method of accessing an interface panel of signal interface assembly **12** comprises the steps of releasing the latching mechanisms **90** securing cover **76** to the side wings **80** (FIGS. **8** and **9**) when in the stowed configuration. In the stowed configuration, the cover **76** extends substantially parallel to the side wings **80** to provide a flush outer surface to the support **44**. To release the latching mechanisms **90**, the handles **325** are pivoted outwardly from the recesses **327** of cover **76**. In response, the lever arms **329** unclamp the cover **76** from the first tabs **318** of the side wings **80**. Next, the cover **76** is pivoted upwardly about horizontal axis **100**, illustratively by angle α to the fully raised position shown in FIG. **22**. The detent assemblies **254** are configured to releasably hold the cover **76** in this position.

[0083] The side wings are **80** are then pivoted outwardly about vertical axis **86** into the deployed position shown in FIG. **6**. The step of pivoting the side wings **80** outwardly includes biasing the side wings **80** through a spring **282**. The cover **76** is then lowered (pulling down will release the detent assemblies **254**) to the deployed position represented by angle β in FIG. **22**. In the deployed configuration, the cover **76** extends substantially perpendicular to the side wings **80** and at an acute angle relative to vertical. In this position, the flange **250** of the cover **76** receives the second tab **320** of each side wing **80** in a nesting arrangement. Next, the latching mechanisms **90** are engaged to secure the cover **76** to the side wings **80**. More particularly, the handles **325** are pivoted inwardly

into the recesses **327** of the cover **76**. In response, the lever arms **329** clamp the cover **76** to the second tab **320** of the side wings **80**.

[0084] A method of installing a signal entry panel comprises the steps of providing support **44**, and coupling signal entry panel **140**, **142**, **144**, **214**, **216**, **218** to the support **44**. The support **44** illustratively includes outer frame **50** and inner frame **52**. EMI gasket **148** is positioned adjacent the outer frame **50**, and the outer signal entry panel **140**, **142**, **144** is positioned adjacent the outer frame **50** with the EMI gasket **148** being intermediate the panel **140**, **142**, **144**, and the outer frame **50**. Bolts **146** are threadably secured within the outer frame **50** to retain the outer signal entry panel **140**, **142**, **144** in position.

[0085] Cables are illustratively used to electrically couple the outer signal entry panel **140**, **142**, **144**, to the respective inner signal entry panel **214**, **216**, **218**. EMI gasket **222** is positioned against inner frame **52** and the inner signal entry panel **214**, **216**, **218** is then retained in position through bolts **220** threadably secured within the inner frame **52**.

[0086] As may be appreciated, the mounting arrangements of the outer and inner signal entry panels **140**, **142**, **144**, **214**, **216**, **218** facilitate replacement by substitute panels. Moreover, bolts **146**, **220** permit removal and replacement of signal entry panels **140**, **142**, **144**, **214**, **216**, **218** on the outer frame **50** and the inner frame **52**, respectively. Once installation is complete, the cover **76** and side wings **80** may be operated as detailed herein to protect the outer signal entry panels **140**, **142**, **144** from environmental elements.

[0087] As shown in FIGS. **35** and **36**, a further illustrative signal interface assembly **412** includes many similar features to the embodiments detailed above. As such, similar elements will be identified with like reference numbers. The signal interface assembly **412** illustratively includes flexible side shields **414** configured to extend adjacent, and in laterally spaced relation to, the side wings **80**. In certain embodiments, the flexible side shields **414** may replace the side wings **80**. The side shields **414** further assist in preventing environmental elements, such as water, sand, and debris, from contacting the signal entry panels **214**. The side shields **414** may each comprise an inflatable bladder **416** fluidly coupled to a fluid supply **418**, such as a pneumatic pump or storage cannister, through a fluid supply line **420**. A first end of the bladder **416** illustratively includes a mounting strip **422** secured to the housing, while a second end of the bladder **416** illustratively includes a magnetic coupler **424** for releasable coupling to an inner surface of the cover **76**.

[0088] FIG. **35** shows the bladder **416** in a deflated state and disconnected from the cover **76**, while FIG. **36** shows the bladder **416** inflated and coupled to the cover **76**. The fluid supply **418** may be activated for inflating the bladder **416** through a user interface, such as a user controlled switch, or through a sensor, such as a limit switch **426** configured to detect when the cover **76** is raised.

[0089] FIG. **37** shows a further illustrative signal interface assembly **512** having many similar features to the embodiments detailed above. As such, similar elements will be identified with like reference numbers. As with the signal interface assembly **412**, the signal interface assembly **512** includes flexible side shields **514** configured to extend adjacent, and in laterally spaced relation to, the side wings **80**. In certain embodiments, the flexible side shields **514** may replace the side wings **80**. The side shields **514** may each comprise a flexible curtain **516** having a first end secured to the housing **48**, and a second end coupled to the cover **76**.

[0090] Each curtain **516** illustratively includes a plurality of foldable panels **518** supported between braces **520**. The panels **518** are configured to collapse or fold in an accordion fashion. A releasable coupler, such as a hook and look fastener **522**, illustratively secures the second end of the flexible curtain **516** to the cover **76**. More particularly, a hook portion **524** may be secured to the cover **76**, and a mating loop portion **526** may be secured to the curtain **516**.

[0091] A retractor **528** is illustratively configured to fold the curtain **516**. Retractor **528** may include a cord **530** supported on a rotatable spool **532**. As the cord **530** is wound onto the spool **532**, the second end of the curtain **516** is retracted and the curtain **516** folds or retracts inwardly. A drive mechanism (not shown) may be operably coupled to the spool **532** for imparting rotation thereof.

[0092] While this invention has been described as having an exemplary design, the present invention may be further modified within the spirit and scope of this disclosure. This application is therefore intended to cover any variations, uses, or adaptations of the invention using its general principles. Further, this application is intended to cover such departures from the present disclosure as come within known or customary practice in the art to which this invention pertains.

1. A signal interface assembly comprising:

a support;

a first movable member, wherein the first movable member comprises a cover and being rotatably movable between a first position and a second position;

a first hinge coupled to a first portion of said support and a side area of said first movable member, said first hinge further comprises a structure that includes a spring or lever detent structure which releasably locks said first hinge assembly in a plurality of releasable locking positions;

at least one latching mechanism coupled to said first movable member;

at least one second movable member;

a second hinge coupled to a second portion of said support and to said at least one second movable member, said second hinge further comprise a spring or lever to respectively bias the at least one second movable member outwardly from a stowed position to a deployed position; and

a flexible upper shield extending over the first hinge;

wherein said second movable member comprises a first edge and a second edge of said second moveable member substantially having a triangular relationship between them, wherein said second edge is formed with a lip or flange and a cut-out notch, wherein said cut-out notch provides clearance for said latching mechanism to couple said first and second members in said stowed position by engaging an edge of said lip or flange defined by said notch or cut-out;

wherein said at least one latching mechanism is configured to secure said at least one second movable member to said first moveable member in at least two different relative configurations.

2. The signal interface assembly of claim **1**, wherein said first movable member is substantially planar, and said second movable member is substantially planar.

3. (canceled)

4. The signal interface assembly of claim **1**, wherein the support includes an inner frame and an outer frame positioned in spaced relation to the inner frame and defining a chamber therebetween.

5. The signal interface assembly of claim **4**, further comprising an inner electrical interface panel supported by the inner frame, and an outer electrical interface panel supported by the outer frame.

6. The signal interface assembly of claim **5**, further comprising a releasable coupler securing the outer electrical interface panel to the outer frame.

7. The signal interface assembly of claim **4**, further comprising an electromagnetic interference gasket received intermediate the outer electrical interface panel and the outer frame.

8. The signal interface assembly of claim **4**, wherein the outer frame includes an upper frame member coupled to a lower frame member, the upper frame member angled relative to the lower frame member.

9. The signal interface assembly of claim **8**, wherein the outer frame further includes a deflector operably coupled below the lower frame member and angled relative thereto.

10. (canceled)

11. The signal interface assembly of claim **1**, wherein the support includes a mounting flange configured to be secured to a vertical support surface.

12. (canceled)

13. The signal interface assembly of claim **1**, further comprising a flexible side shield extending between the support structure and the second movable member.

14. The signal interface assembly of claim **13**, further comprising a fluid supply, wherein the flexible side shield includes an air bladder fluid coupled to the fluid supply.

15. The signal interface assembly of claim **13**, wherein the flexible shield includes a foldable curtain.

16. The signal interface assembly of claim **15**, further comprising a retractor operably coupled to the foldable curtain.

17. The signal interface assembly of claim **1**, wherein the first movable member extends substantially parallel to the second moveable member in said stowed position to provide a flush outer surface to the support.

18. The signal interface assembly of claim **17**, wherein the first movable member extends at an acute angle relative to the support in the deployed position.

19. (canceled)

20. The signal interface assembly of claim **1**, wherein the first hinge includes the detents, the detents including a spring biased pin.

21. The signal interface assembly of claim **1**, further comprising a standoff between the support and the second hinge defining a space for receiving a portion of the second movable member in a deployed position.

22.-**55**. (canceled)

56. An electrical interface assembly comprising:

a support including an outer frame;

an electrical interface panel supported by the outer frame;

a cover operably coupled to the support for pivoting movement about a horizontal axis between a stowed position and a deployed position;

a first side wing operably coupled to the support for pivoting movement about a first vertical axis between a stowed position and a deployed position; and

a second side wing operably coupled to the support for pivoting movement about a second vertical axis between a stowed position and a deployed position;

a first hinge coupled to the cover and to the support at an upper end of the cover;

a second hinge coupled to the first side wing and the support at a side of the first side wing; and

a flexible upper shield extending over the first hinge;

wherein said first and second side wings each comprises a first edge and a second edge of said side wings and further substantially having a triangular relationship between them, wherein said second edge is formed with a lip or flange and a cut-out notch, wherein said cut-out notch provides clearance for said latching mechanism to couple said first and second members in said stowed position by engaging an edge of said lip or flange defined by said notch or cut-out.

57. An electrical interface assembly comprising:

a support including an outer frame;

an electrical interface panel supported by the outer frame;

a cover operably coupled to the support for pivoting movement about a horizontal axis between a stowed position and a deployed position;

a first side wing operably coupled to the support for pivoting movement about a first vertical axis between a stowed position and a deployed position; and

a second side wing operably coupled to the support for pivoting movement about a second vertical axis between a stowed position and a deployed position;

further comprising a flexible side shield extending between the support and the first side wing.

58. The electrical interface assembly of claim **57**, further comprising a fluid supply, wherein the flexible side shield includes an air bladder fluid coupled to the fluid supply.

59. The electrical interface assembly of claim **57**, wherein the flexible shield includes a foldable curtain.

60. The electrical interface assembly of claim **59**, further comprising a retractor operably coupled to the foldable curtain.

61.-**72**. (canceled)

73. A signal interface assembly comprising:

a support;

a first movable member, wherein the first movable member comprises a cover and being rotatably movable between a first position and a second position;

a first hinge coupled to a first portion of said support and an edge portion of said first movable member, said first hinge further comprises a structure that includes a spring or lever detent structure which releasably locks said first hinge assembly in a plurality of releasable locking positions;

at least one latching mechanism coupled to said first movable member;

at least one second movable member;

a second hinge coupled to a second portion of said support and to said at least one second movable member, said second hinge further comprise a spring or lever to respectively bias the at least one second movable member outwardly from a stowed position to a deployed position; and

a flexible upper shield extending over the first hinge;

a flexible side shield extending between the support structure and the second movable member, wherein the flexible side

shield further includes a foldable curtain, said foldable curtain further comprising a retractor operably coupled to the foldable curtain;

a fluid supply, wherein the flexible side shield comprises an inflatable portion adapted to extend or retract upon fluid or air connection to said fluid supply;

wherein said second movable member comprises a first edge and a second edge of said second moveable member substantially having a triangular relationship between them, wherein said second edge is formed with a lip or flange and a cut-out notch, wherein said cut-out notch provides clearance for said latching mechanism to couple said first and second members in said stowed position by engaging an edge of said lip or flange defined by said notch or cut-out;

wherein said at least one latching mechanism is configured to secure said at least one second movable member to said first moveable member in at least two different relative configurations;

74. The signal interface assembly of claim **73**, wherein said first movable member is substantially planar, and said second movable member is substantially planar.

75. The signal interface assembly of claim **73**, wherein the support includes an inner frame and an outer frame positioned in spaced relation to the inner frame and defining a chamber therebetween.

76. The signal interface assembly of claim **75**, further comprising an inner electrical interface panel supported by the inner frame, and an outer electrical interface panel supported by the outer frame.

77. The signal interface assembly of claim **76**, further comprising a releasable coupler securing the outer electrical interface panel to the outer frame.

78. The signal interface assembly of claim **75**, further comprising an electromagnetic interference gasket received intermediate the outer electrical interface panel and the outer frame.

79. The signal interface assembly of claim **75**, wherein the outer frame includes an upper frame member coupled to a lower frame member, the upper frame member angled relative to the lower frame member.

80. The signal interface assembly of claim **79**, wherein the outer frame further includes a deflector operably coupled below the lower frame member and angled relative thereto.

81. The signal interface assembly of claim **1**, wherein the support includes a mounting flange configured to be secured to a vertical support surface.

82. The signal interface assembly of claim **73**, wherein the first movable member extends substantially parallel to the second moveable member in said stowed position to provide a flush outer surface to the support.

83. The signal interface assembly of claim **82**, wherein the first movable member extends at an acute angle relative to the support in the deployed position.

84. The signal interface assembly of claim **73**, wherein the first hinge includes the detents, the detents including a spring biased pin.

85. The signal interface assembly of claim **73**, further comprising a standoff between the support and the second hinge defining a space for receiving a portion of the second movable member in a deployed position.

* * * * *