US008368996B2

(12) **United States Patent**
Cole

(10) **Patent No.: US 8,368,996 B2**
(45) **Date of Patent: Feb. 5, 2013**

(54) **TUNABLE DETECTION SYSTEM**

(75) Inventor: **Aaron Boyd Cole**, Bedford, IN (US)

(73) Assignee: **The United States of America as represented by the Secretary of the Navy**, Washington, DC (US)

(*) Notice: Subject to any disclaimer, the term of this patent is extended or adjusted under 35 U.S.C. 154(b) by 562 days.

(21) Appl. No.: **12/509,154**

(22) Filed: **Jul. 24, 2009**

(65) **Prior Publication Data**

US 2011/0019261 A1 Jan. 27, 2011

(51) **Int. Cl.**
G02B 26/00 (2006.01)

(52) **U.S. Cl.** **359/290**; 359/291

(58) **Field of Classification Search** 359/290, 359/291; 250/338.1
See application file for complete search history.

(56) **References Cited**

U.S. PATENT DOCUMENTS

3,798,532	A	3/1974	Hausser
3,832,061	A	8/1974	Smith et al.
4,068,125	A	1/1978	Bell
4,952,811	A	8/1990	Elliott
5,340,983	A	8/1994	Deinzer et al.
5,548,217	A	8/1996	Gibson et al.
5,591,981	A	1/1997	Heffelfinger et al.
6,485,703	B1	11/2002	Coté et al.
6,785,433	B2	8/2004	Tiefenthaler
7,145,124	B2	12/2006	Garrood et al.
7,254,286	B2	8/2007	Kochergin et al.
7,257,279	B2	8/2007	Guo et al.
7,417,440	B2	8/2008	Peschmann et al.
7,671,687	B2	3/2010	LeChevalier
2003/0053051	A1	3/2003	Blais
2006/0146324	A1	7/2006	Klein
2007/0228503	A1	10/2007	Yokoyama
2008/0217542	A1 *	9/2008	Verma et al. 250/370.01
2008/0290287	A1	11/2008	David

OTHER PUBLICATIONS

Lippmann, Index of refraction of a free-electron-laser beam, 1986 The American Physical Society, vol. 34, No. 1, pp. 638,639.
See-through scanner sets off alarms, Mar. 18, 2002, http://archives.cnn.com/2002/Travel/News/03/18/rec.airport.xray/2/7/2009.
Rapiscan Systems, Hands-Off Screening Quick and Effective Privacy Protection High Resolution Imaging, Mar., 2008 (2 pages).
Rapiscan Systems, Hands-Off Screening Quick and Effective Privacy Protection High Resolution Imaging, http://www.rapiscansystems.com/sec1000.htm12/7/2009 (2 pages).
Rapiscan Systems, Walk-Through Screening Quick and Effective Privacy Protection High Throughput, Mar. 2008 (2 pages).

* cited by examiner

Primary Examiner — James Jones
(74) *Attorney, Agent, or Firm* — Christopher A. Monsey

(57) **ABSTRACT**

A tunable bandwidth selector is disclosed. The tunable bandwidth selector may include a plurality of spaced apart electron sheets which selectively separate a first bandwidth from an input spectrum.

24 Claims, 18 Drawing Sheets

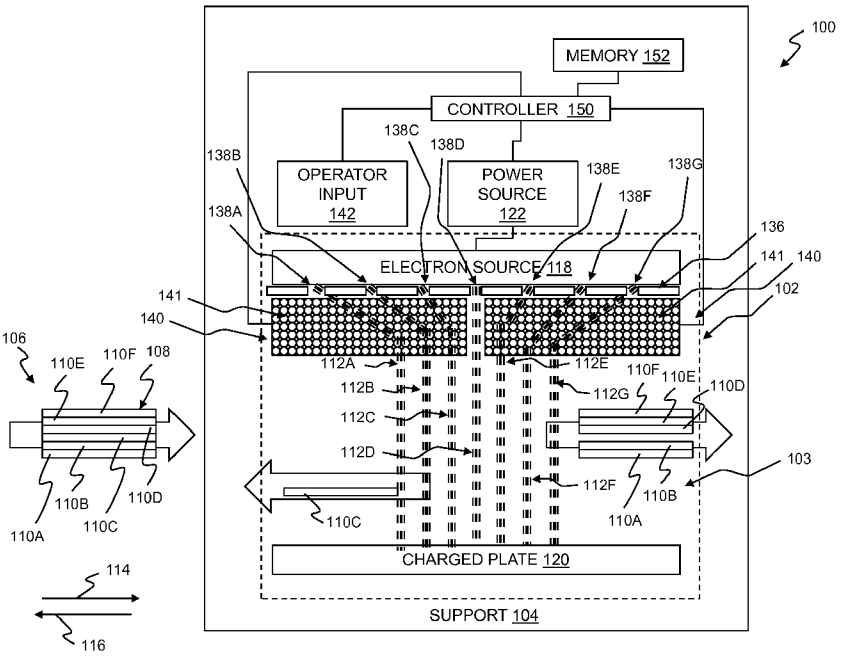

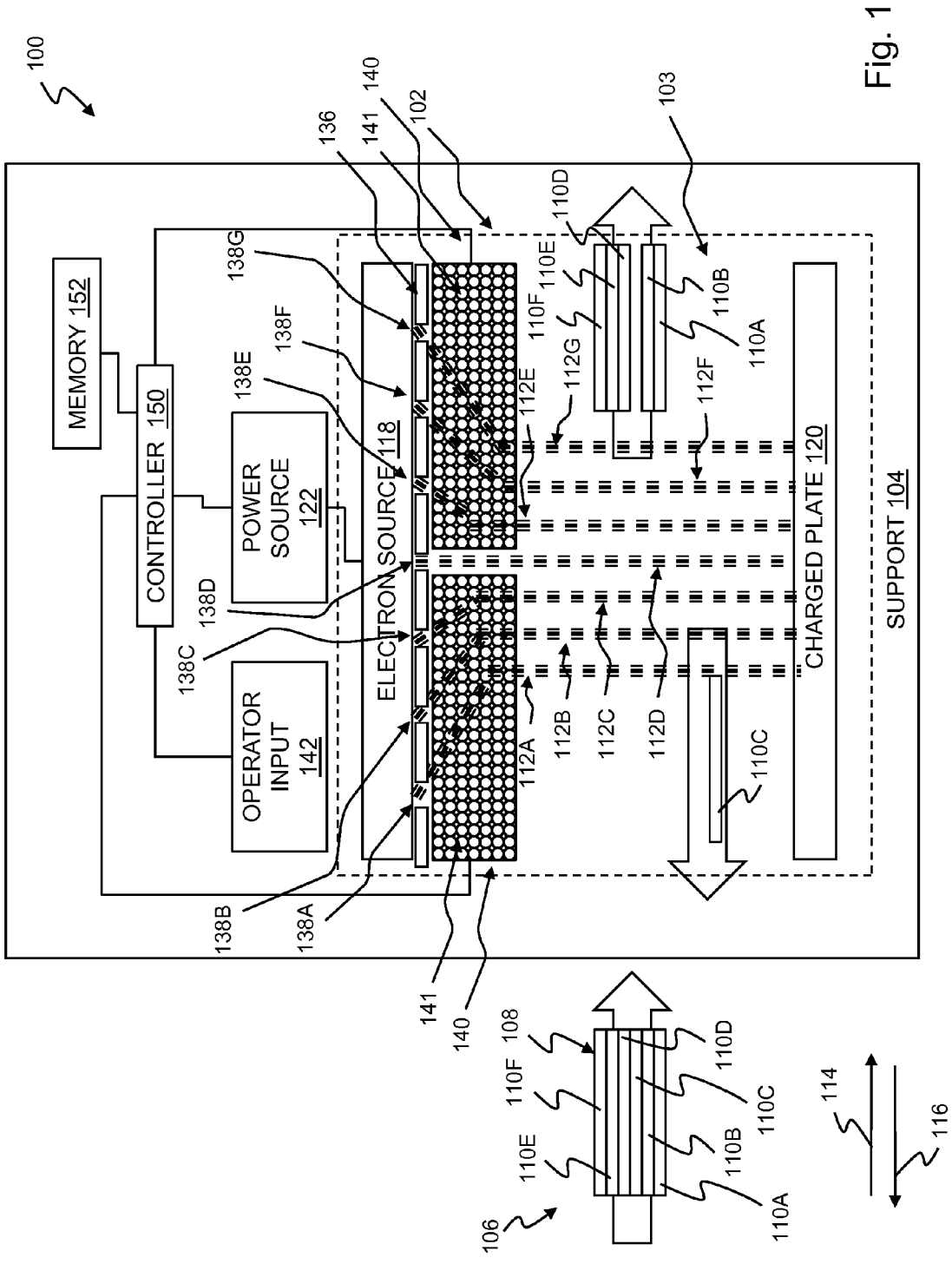
100
MEMORY 152
CONTROLLER 150
POWER SOURCE 122
OPERATOR INPUT 142
ELECTRON SOURCE 118
CHARGED PLATE 120
SUPPORT 104
136
141
140
102
103
138A
138B
138C
138D
138E
138F
138G
110A
110B
110C
110D
110E
110F
112A
112B
112C
112D
112E
112F
112G
106
108
114
116

Fig. 1

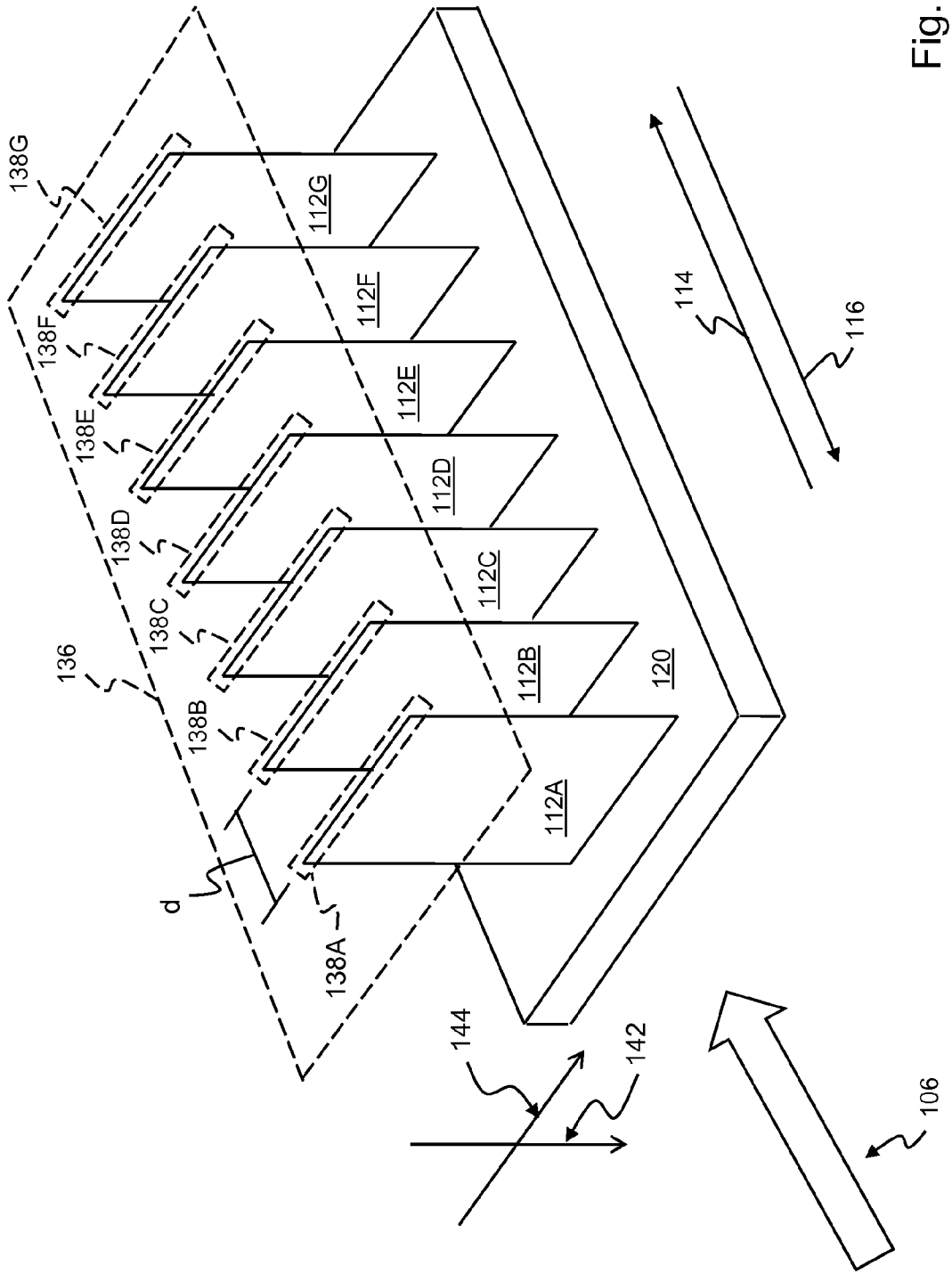
138G
138F
138E
138D
138C
138B
138A
136
d
112G
112F
112E
112D
112C
112B
112A
120
114
116
144
142
106

Fig. 1A

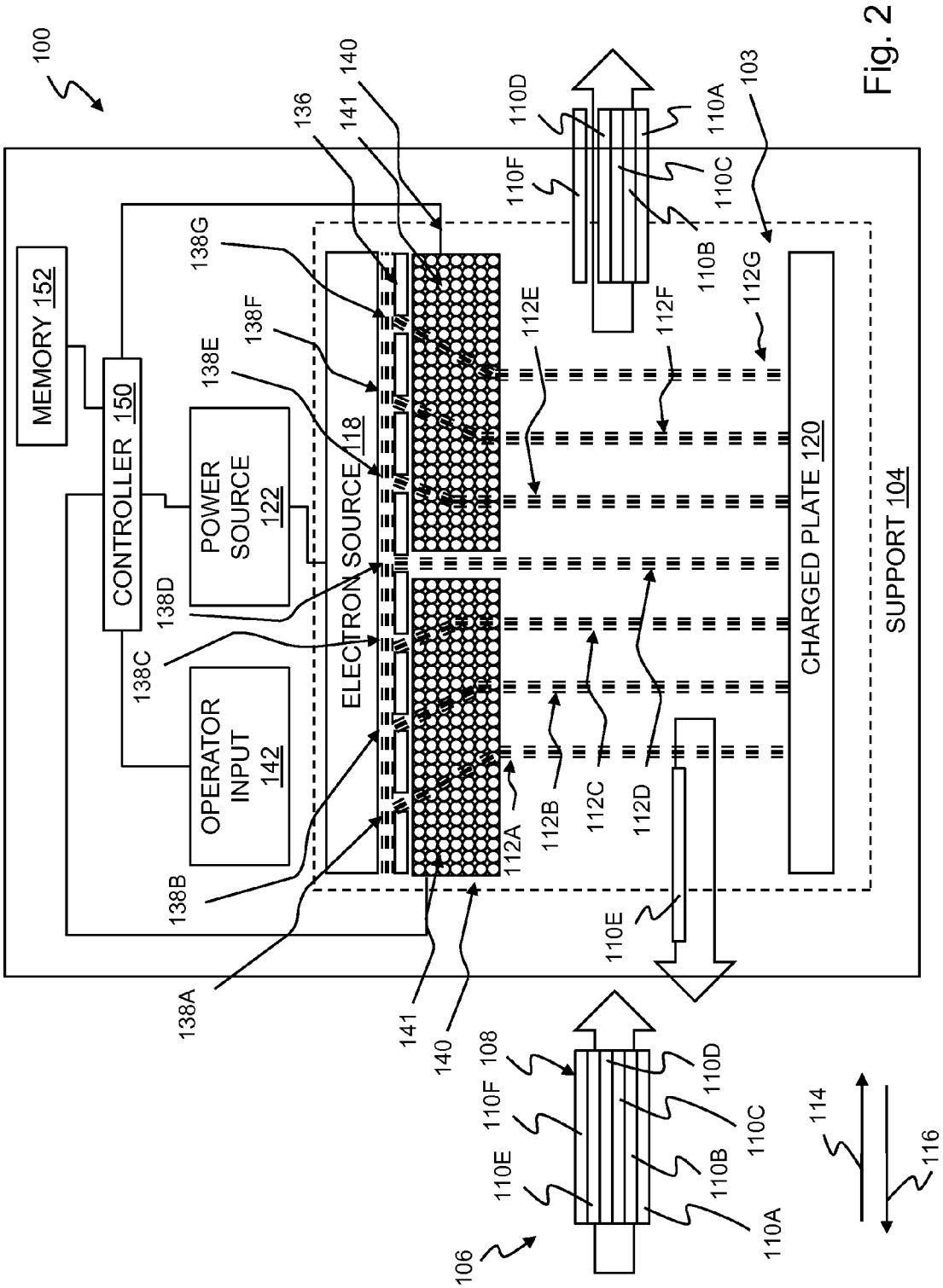
100
MEMORY 152
CONTROLLER 150
POWER SOURCE 122
OPERATOR INPUT 142
ELECTRON SOURCE 118
CHARGED PLATE 120
SUPPORT 104
136
140
141
138A
138B
138C
138D
138E
138F
138G
110A
110B
110C
110D
110E
110F
103
112A
112B
112C
112D
112E
112F
112G
106
108
114
116

Fig. 2

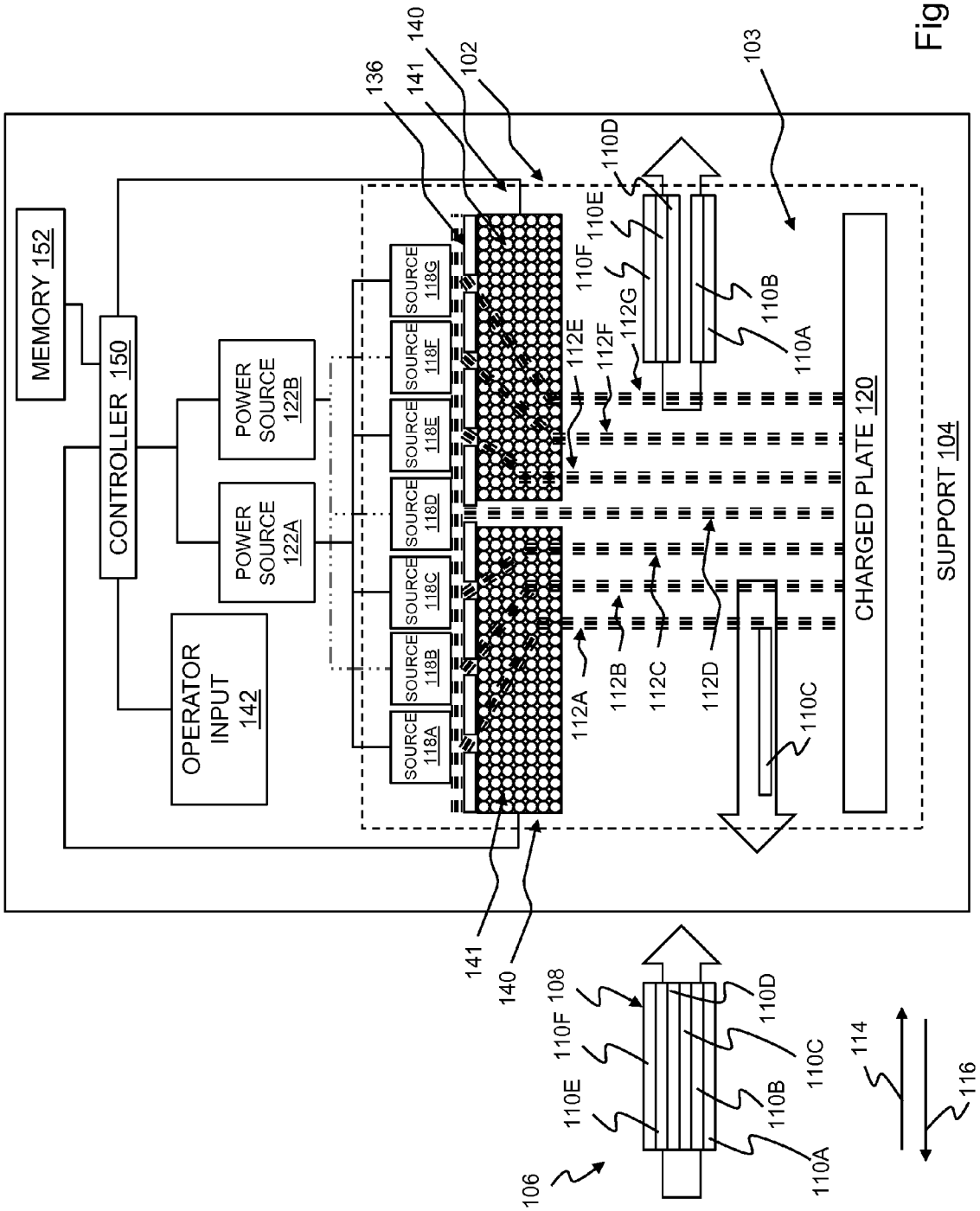
MEMORY 152
CONTROLLER 150
POWER SOURCE 122B
POWER SOURCE 122A
OPERATOR INPUT 142
SOURCE 118A
SOURCE 118B
SOURCE 118C
SOURCE 118D
SOURCE 118E
SOURCE 118F
SOURCE 118G
136
141
140
102
103
110D
110E
110F
112G
112E
112F
110B
110A
112A
112B
112C
112D
110C
CHARGED PLATE 120
SUPPORT 104
141
140
108
110F
110E
106
110D
110C
110B
110A
114
116

Fig. 3

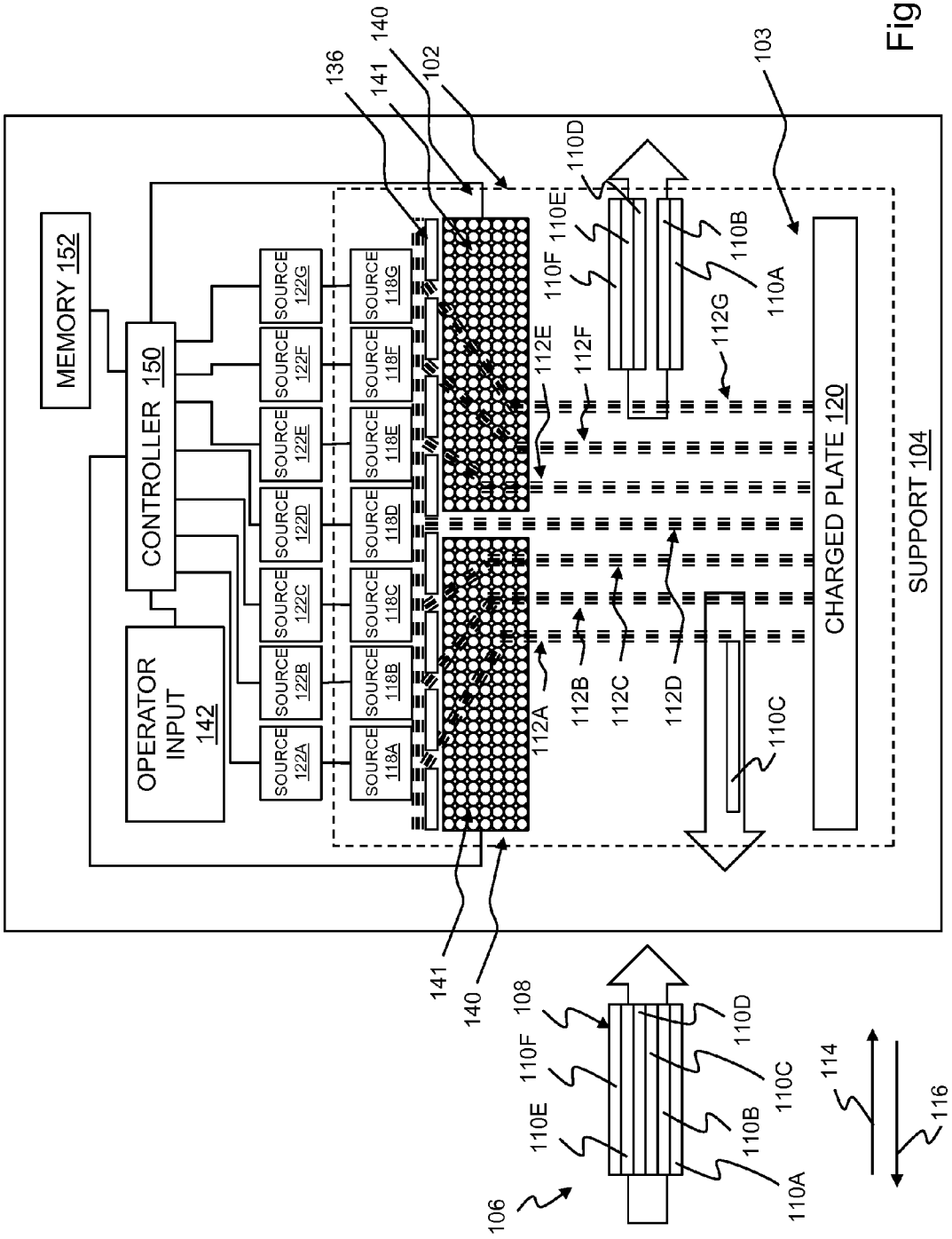
MEMORY 152
CONTROLLER 150
OPERATOR INPUT 142
SOURCE 122A
SOURCE 122B
SOURCE 122C
SOURCE 122D
SOURCE 122E
SOURCE 122F
SOURCE 122G
SOURCE 118A
SOURCE 118B
SOURCE 118C
SOURCE 118D
SOURCE 118E
SOURCE 118F
SOURCE 118G
136
141
140
102
103
110D
110E
110F
110B
110A
112E
112F
112G
112A
112B
112C
112D
110C
CHARGED PLATE 120
SUPPORT 104
141
140
108
110F
110E
106
110D
110C
110B
110A
114
116

Fig. 4

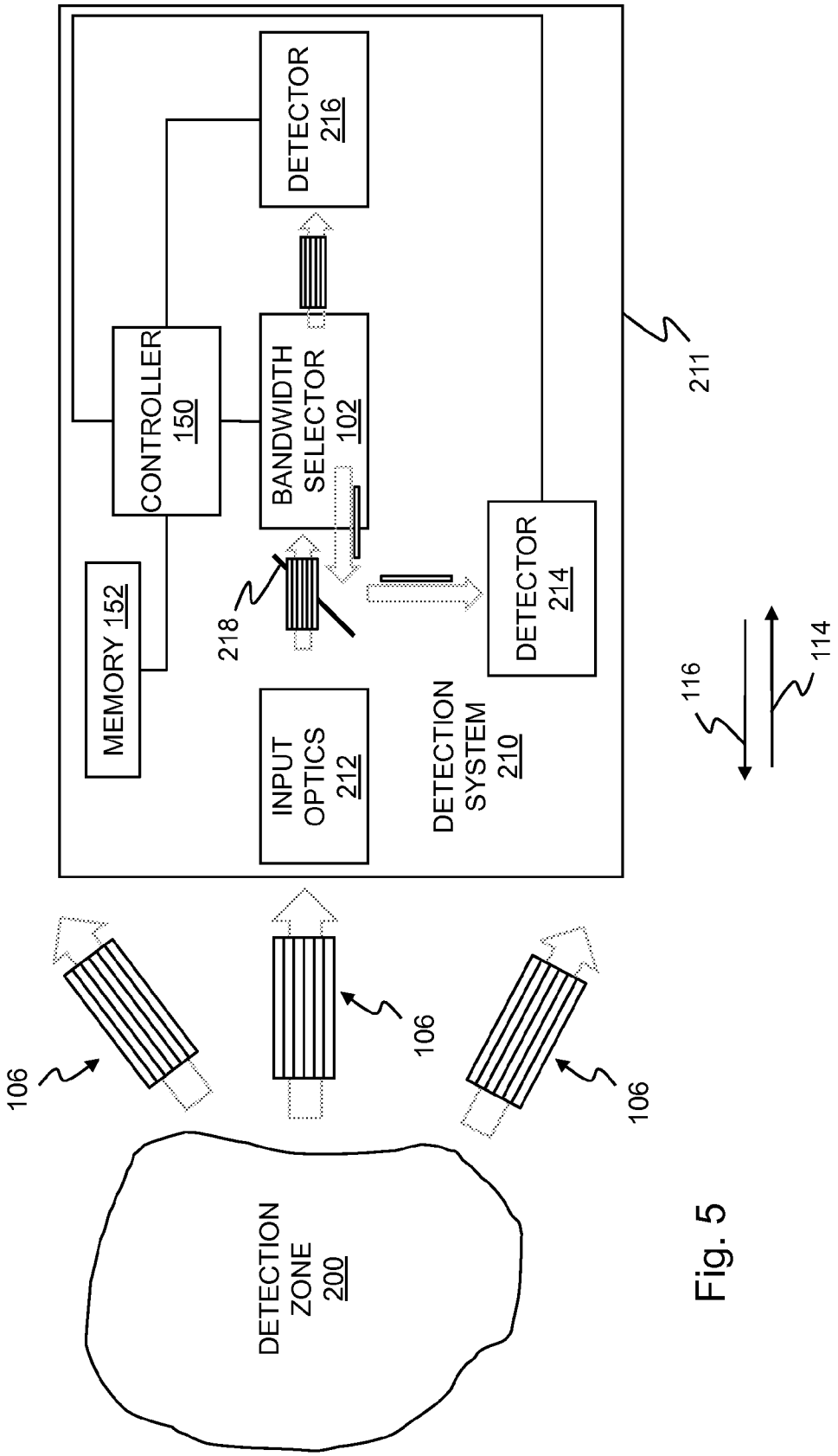
DETECTOR 216
CONTROLLER 150
BANDWIDTH SELECTOR 102
211
MEMORY 152
218
DETECTOR 214
116
114
INPUT OPTICS 212
DETECTION SYSTEM 210
106
106
106
DETECTION ZONE 200

Fig. 5

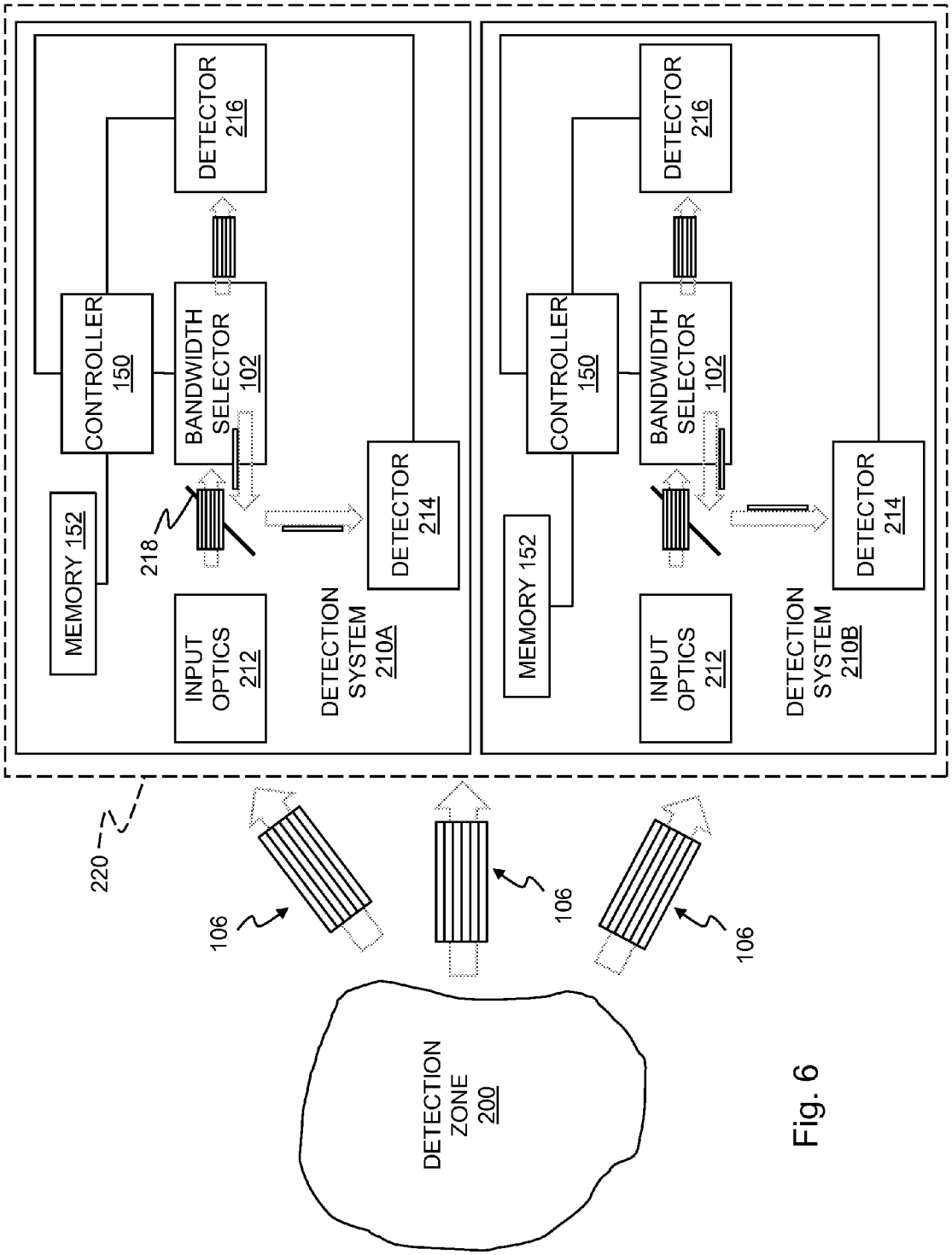
220
106
106
106
DETECTION ZONE 200
MEMORY 152
CONTROLLER 150
BANDWIDTH SELECTOR 102
DETECTOR 216
218
INPUT OPTICS 212
DETECTION SYSTEM 210A
DETECTOR 214
MEMORY 152
CONTROLLER 150
BANDWIDTH SELECTOR 102
DETECTOR 216
INPUT OPTICS 212
DETECTION SYSTEM 210B
DETECTOR 214

Fig. 6

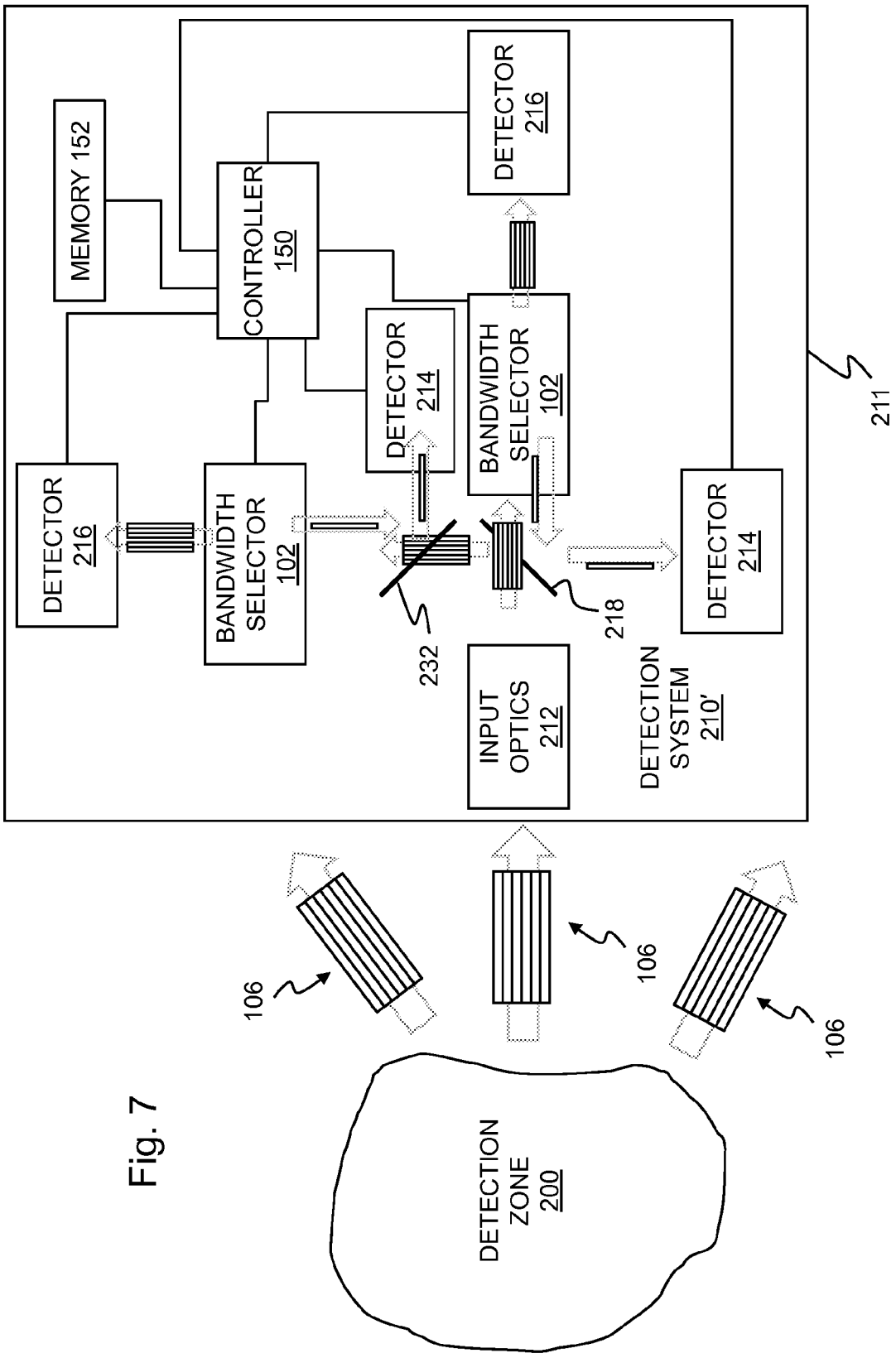
MEMORY 152
CONTROLLER 150
DETECTOR 216
DETECTOR 214
BANDWIDTH SELECTOR 102
DETECTOR 216
BANDWIDTH SELECTOR 102
DETECTOR 214
232
INPUT OPTICS 212
218
DETECTION SYSTEM 210'
211
106
106
106
DETECTION ZONE 200

Fig. 7

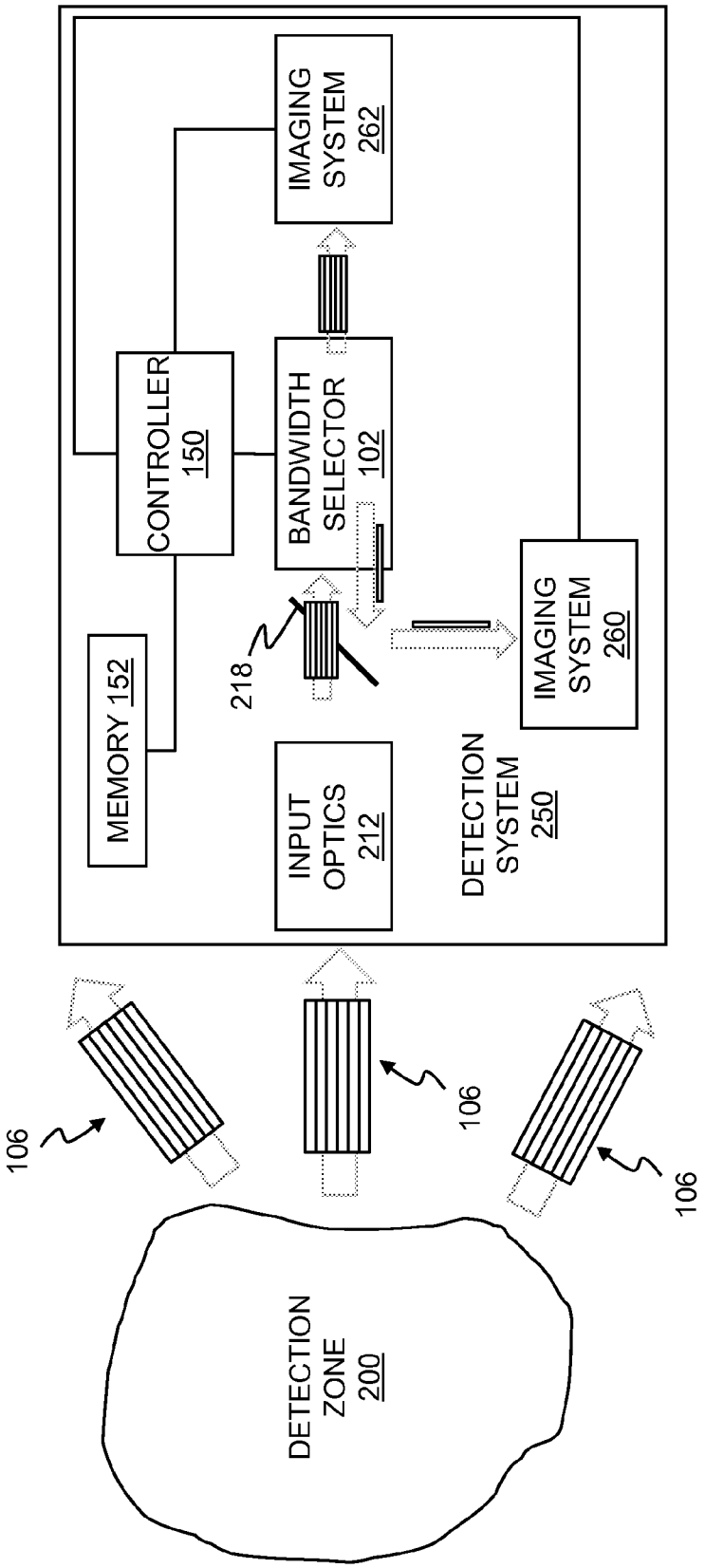
IMAGING SYSTEM 262
CONTROLLER 150
BANDWIDTH SELECTOR 102
MEMORY 152
218
IMAGING SYSTEM 260
INPUT OPTICS 212
DETECTION SYSTEM 250
106
106
106
DETECTION ZONE 200

Fig. 8

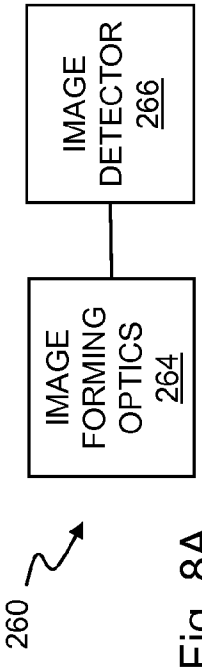
IMAGE DETECTOR 266
IMAGE FORMING OPTICS 264
260

Fig. 8A

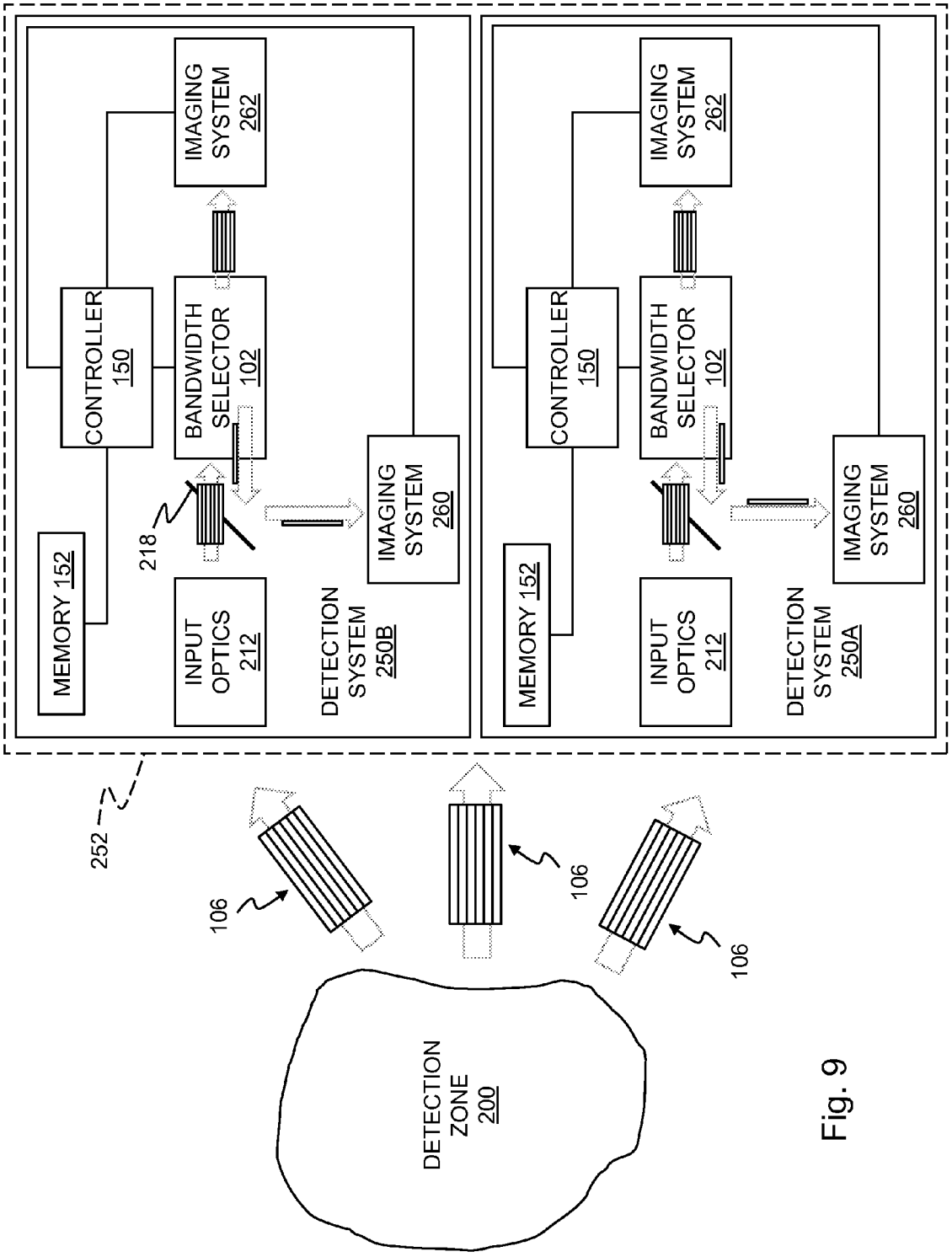
MEMORY 152
CONTROLLER 150
BANDWIDTH SELECTOR 102
IMAGING SYSTEM 262
218
INPUT OPTICS 212
IMAGING SYSTEM 260
DETECTION SYSTEM 250B
MEMORY 152
CONTROLLER 150
BANDWIDTH SELECTOR 102
IMAGING SYSTEM 262
INPUT OPTICS 212
IMAGING SYSTEM 260
DETECTION SYSTEM 250A
252
106
106
106
DETECTION ZONE 200

Fig. 9

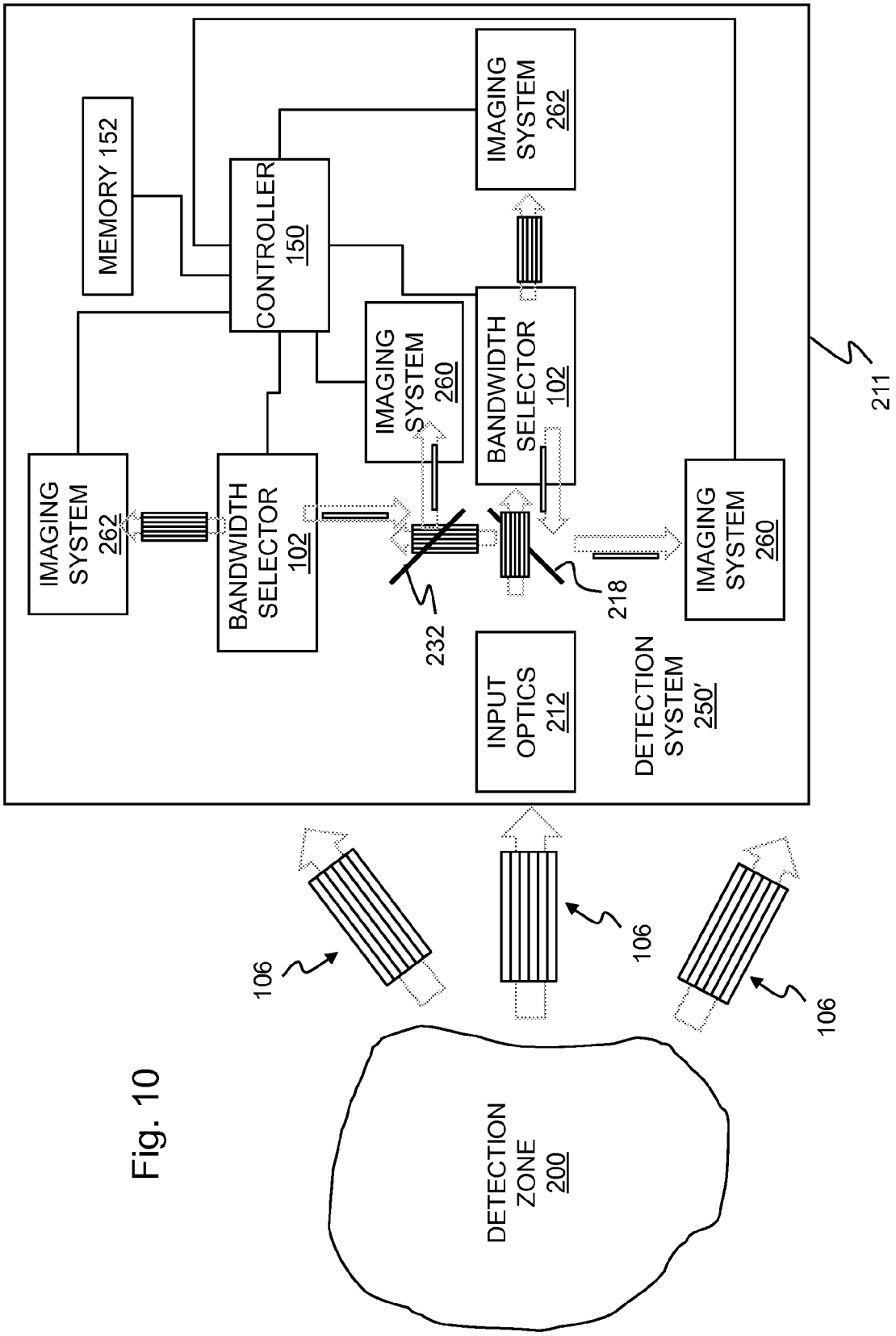
MEMORY 152
CONTROLLER 150
IMAGING SYSTEM 262
IMAGING SYSTEM 260
BANDWIDTH SELECTOR 102
IMAGING SYSTEM 262
BANDWIDTH SELECTOR 102
IMAGING SYSTEM 260
232
218
INPUT OPTICS 212
DETECTION SYSTEM 250'
211
106
106
106
DETECTION ZONE 200

Fig. 10

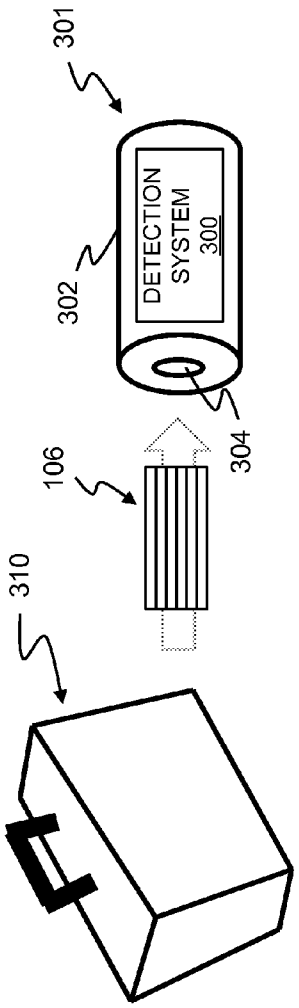

Fig. 11

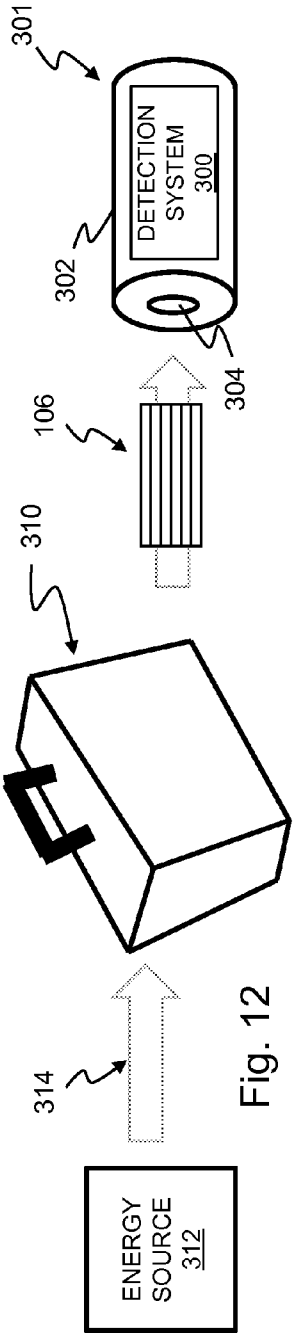

Fig. 12

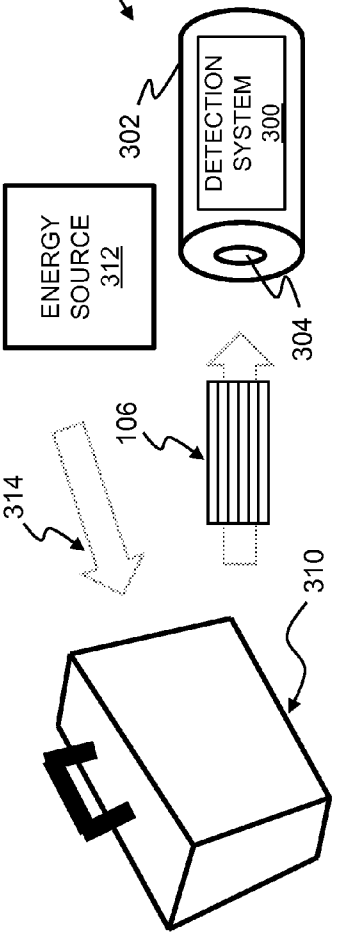

Fig. 13

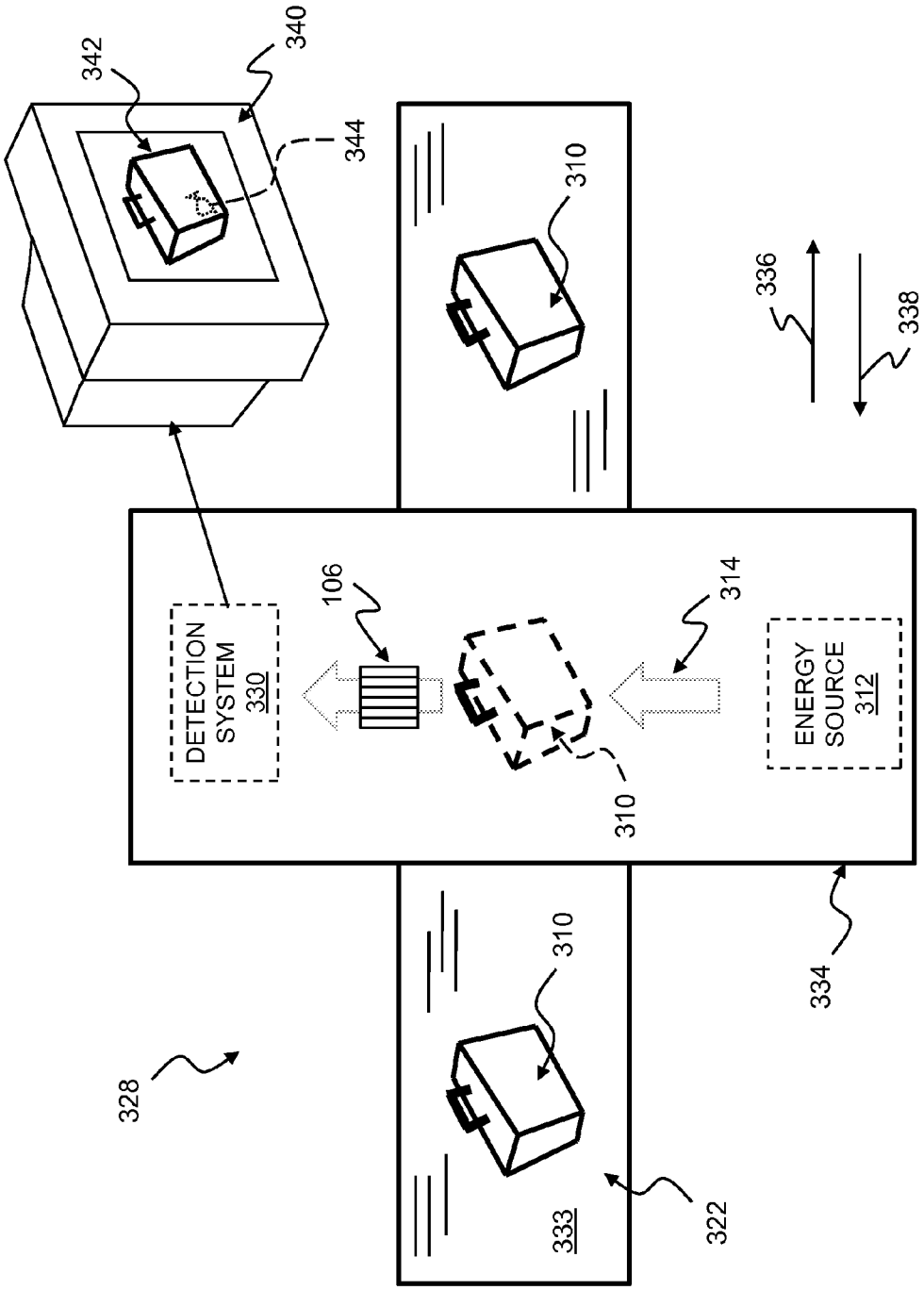
342
340
344
310
336
338
DETECTION SYSTEM 330
106
314
ENERGY SOURCE 312
310
334
328
310
333
322

Fig. 14

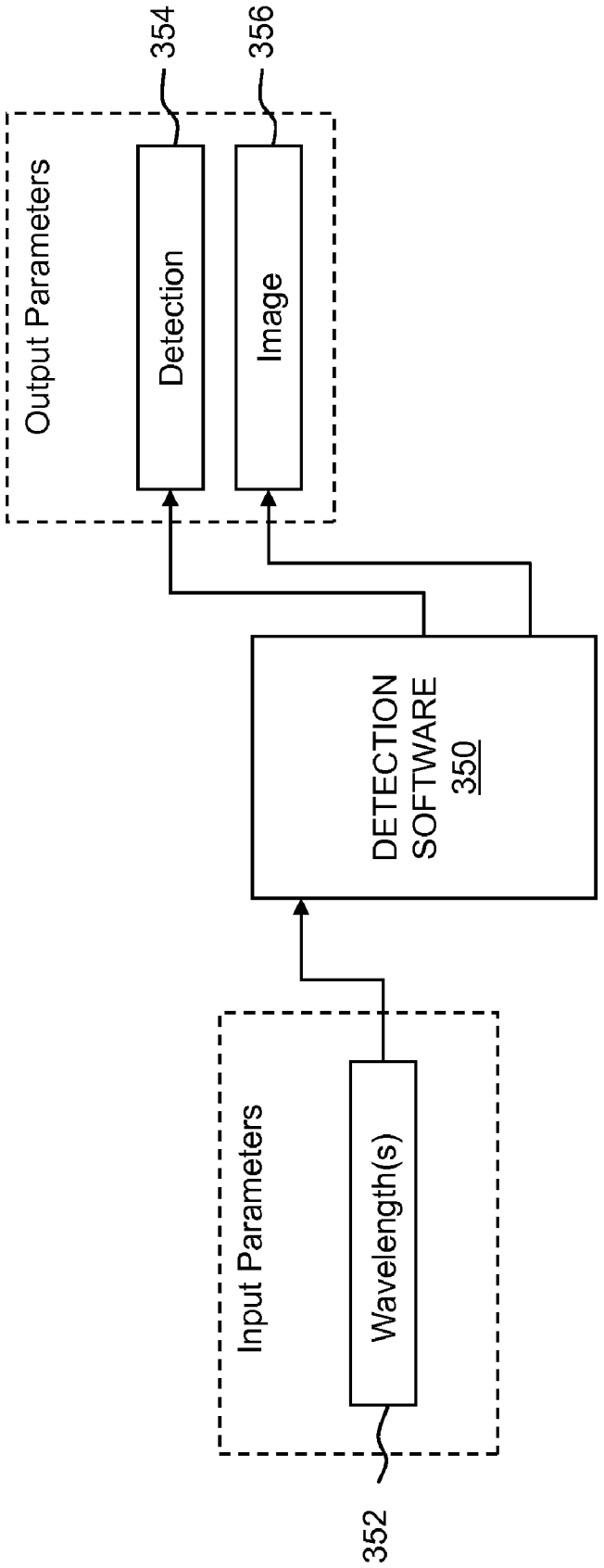
Input Parameters
Wavelength(s)
352
DETECTION SOFTWARE 350
Output Parameters
Detection
Image
354
356

Fig. 15

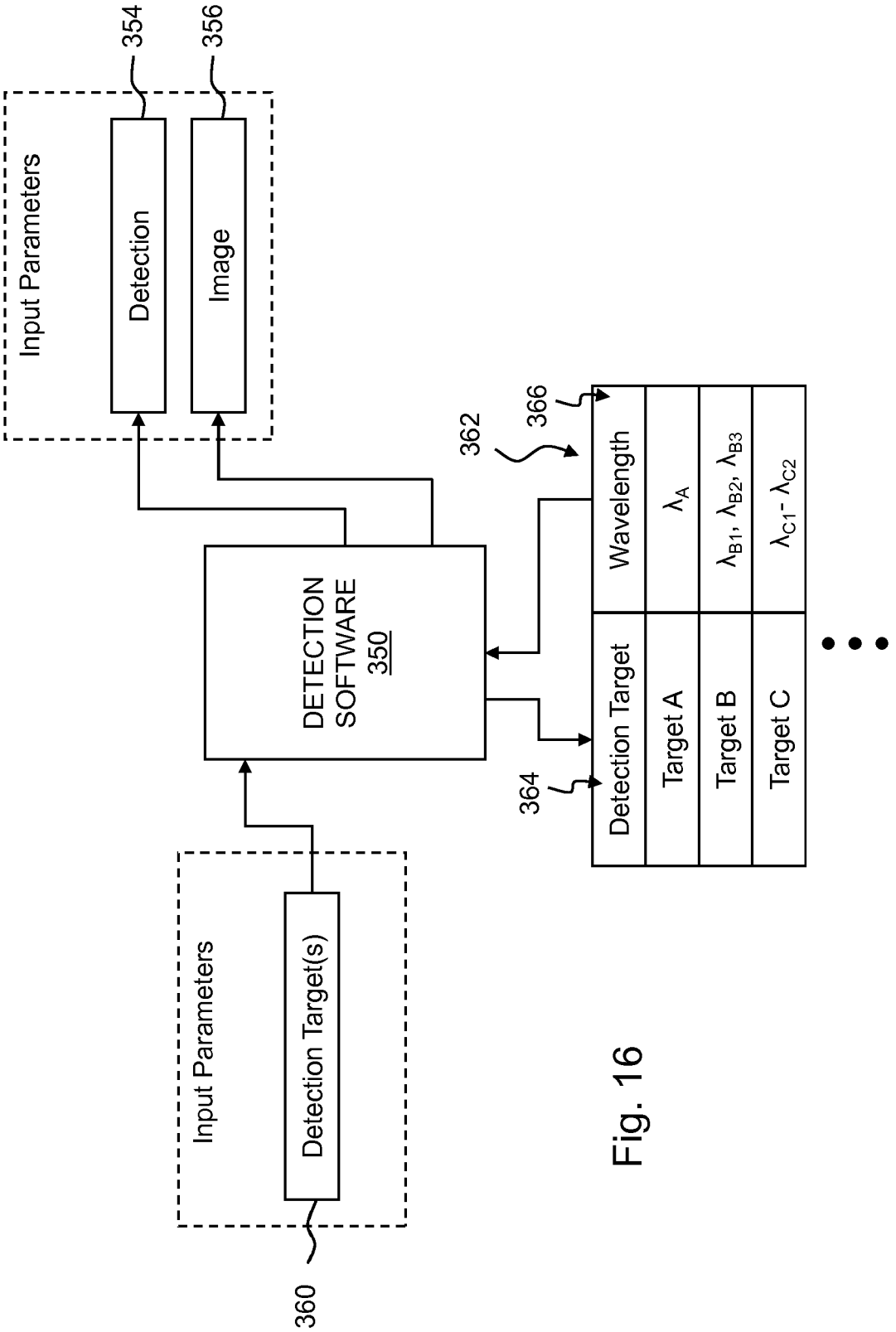
354
356
Input Parameters
Detection
Image
DETECTION SOFTWARE 350
362
366
Wavelength
λ_A
λ_{B1}, λ_{B2}, λ_{B3}
λ_{C1}- λ_{C2}
Detection Target
Target A
Target B
Target C
364
Input Parameters
Detection Target(s)
360

Fig. 16

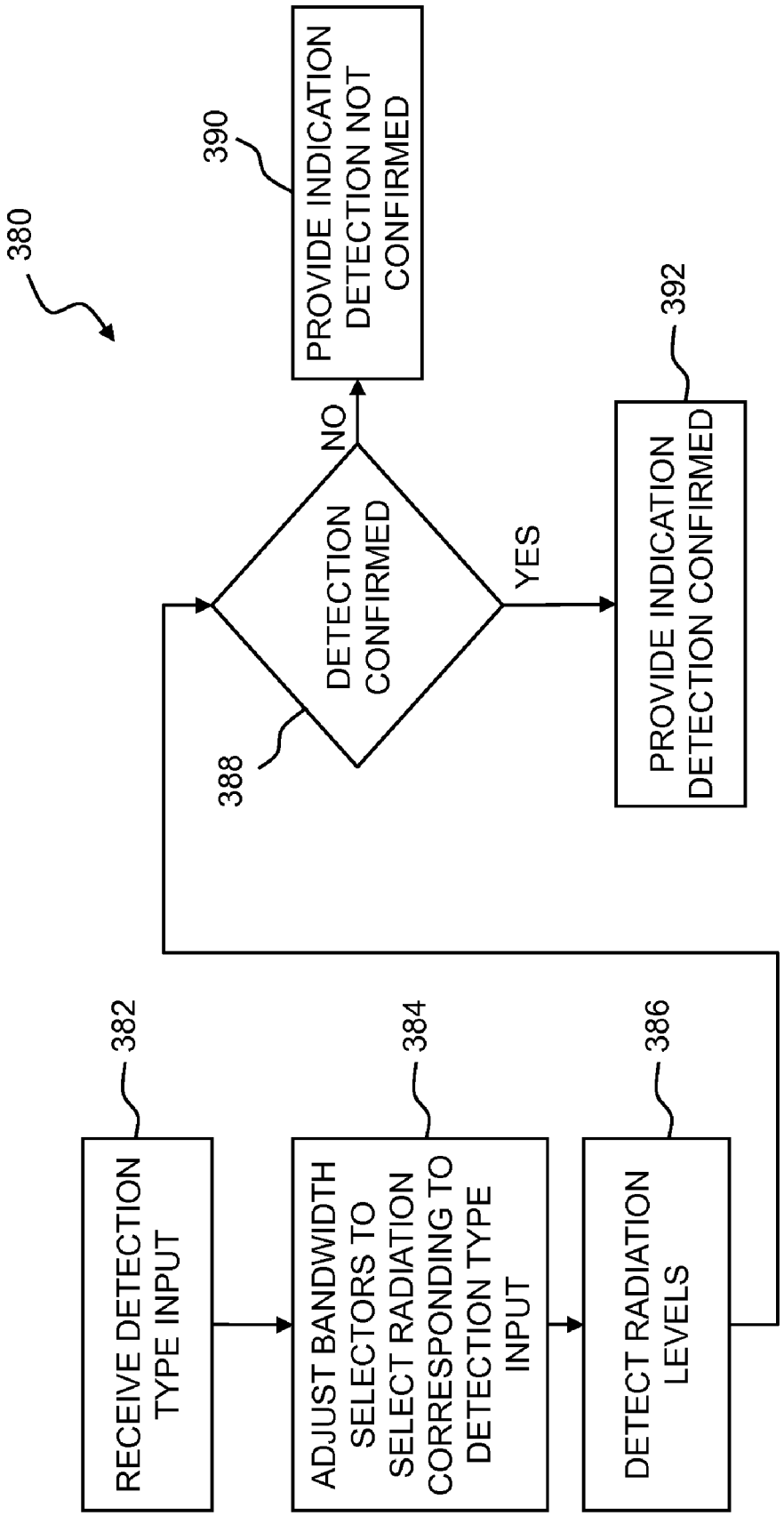
380
RECEIVE DETECTION TYPE INPUT
382
ADJUST BANDWIDTH SELECTORS TO SELECT RADIATION CORRESPONDING TO DETECTION TYPE INPUT
384
DETECT RADIATION LEVELS
386
DETECTION CONFIRMED
388
NO
YES
PROVIDE INDICATION DETECTION NOT CONFIRMED
390
PROVIDE INDICATION DETECTION CONFIRMED
392

Fig. 17

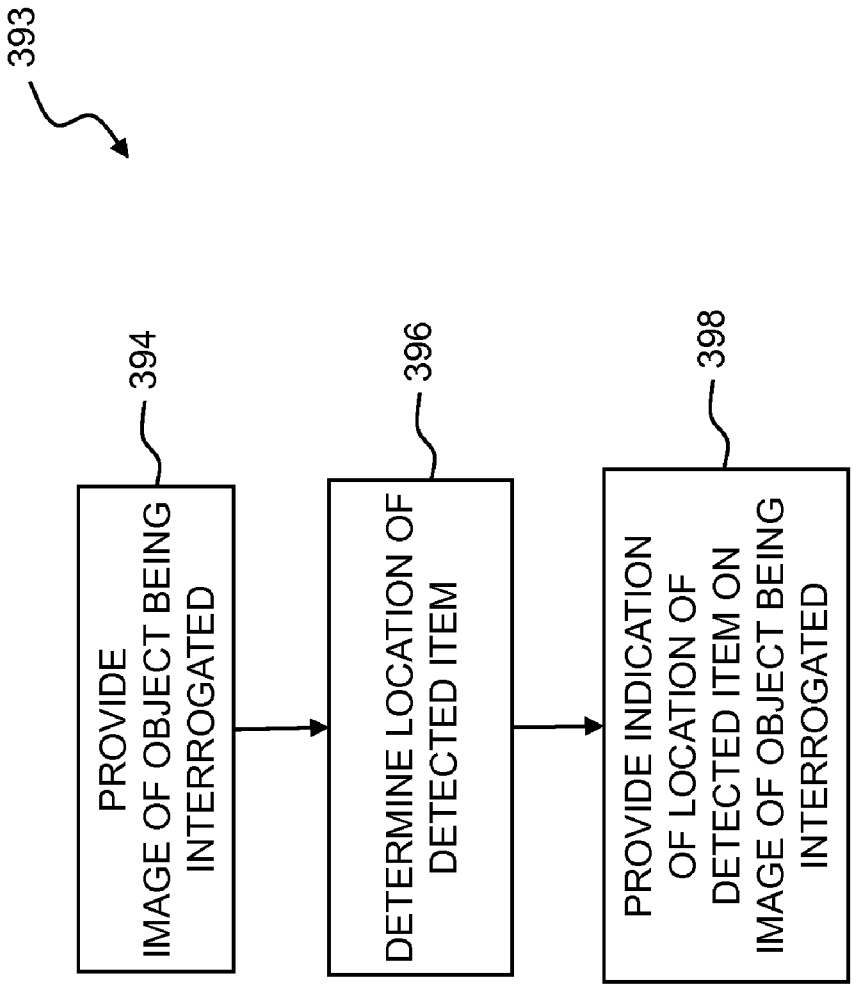
393
394
PROVIDE IMAGE OF OBJECT BEING INTERROGATED
396
DETERMINE LOCATION OF DETECTED ITEM
398
PROVIDE INDICATION OF LOCATION OF DETECTED ITEM ON IMAGE OF OBJECT BEING INTERROGATED

Fig. 18

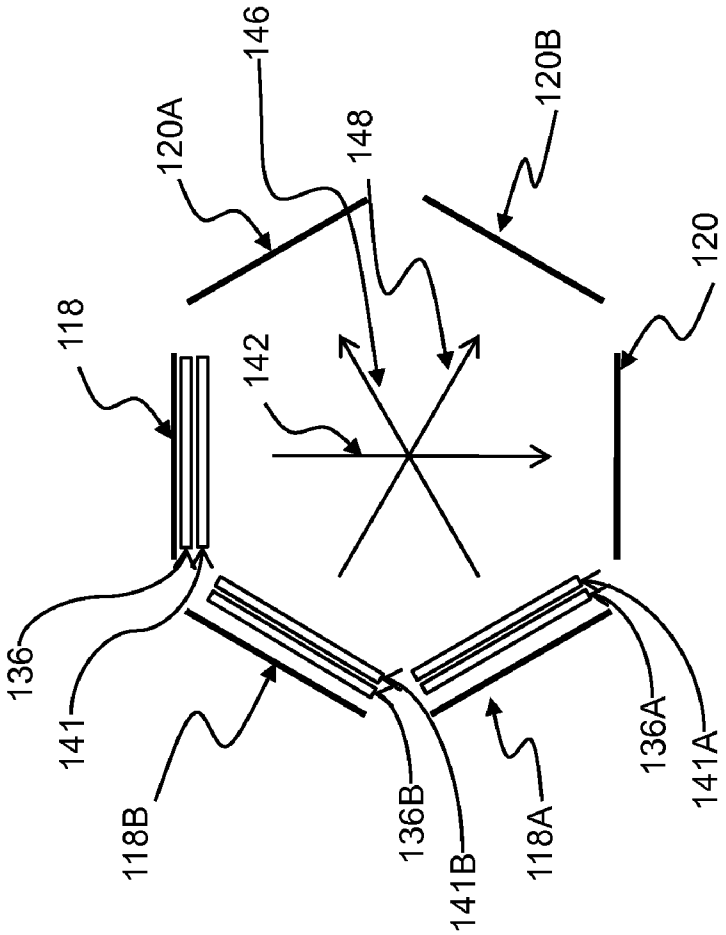
146
120A
148
120B
118
142
120
136
141
118B
136B
141B
118A
136A
141A

Fig. 20

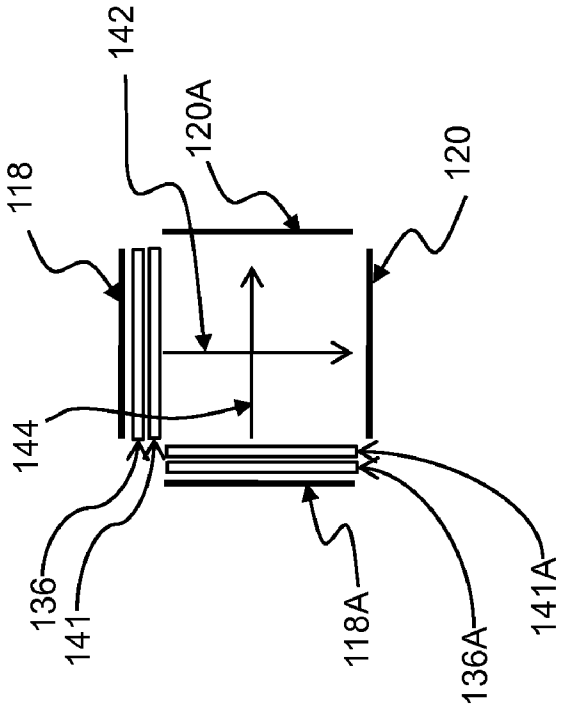
142
120A
118
120
144
136
141
118A
136A
141A

Fig. 19

TUNABLE DETECTION SYSTEM

STATEMENT REGARDING FEDERALLY SPONSORED RESEARCH OR DEVELOPMENT

The invention described herein was made in the performance of official duties by employees of the Department of the Navy and may be manufactured, used and licensed by or for the United States Government for any governmental purpose without payment of any royalties thereon.

BACKGROUND OF THE INVENTION

The present invention relates generally to devices for detecting the presence of an object or substance, and, more particularly, to devices for detecting the presence of an object or substance with a tunable detection system.

It is known to use Fiber Bragg gratings to selectively separate a portion of a spectrum from the remainder of the spectrum. In a Fiber Bragg grating a periodic change in index of refraction is provided in the core of the fiber. Based on the indexes of refraction of the core materials and the spacing of the periodic structure a given bandwidth is separated from an input spectrum. Fiber Bragg gratings are useful in communication and sensor applications.

It is desirable to have a non-fiber based tunable detection system which may be used to identify the presence of one or more elements, molecules, chemicals, biological materials, materials, substances, and objects (collectively referred to as "targets") within an ambient environment or as part of a target of interest in a detection zone.

SUMMARY OF THE INVENTION

In an exemplary embodiment of the present disclosure, a tunable bandwidth selector is provided. In one example, the tunable bandwidth selector is non-fiber based. The tunable bandwidth selector may be used as part of a stand off chemical and/or biological agent detection device. The tunable bandwidth selector may be used as part of a hyper-spectral imaging device. The tunable bandwidth selector may be used as part of a screening system. The tunable bandwidth selector may be used in a non-imaging detection or evaluation system. The tunable bandwidth selector may be used in an imaging detection or evaluation system.

In another exemplary embodiment of the present disclosure, a method for separating a first bandwidth from an input spectrum including the first bandwidth is provided. The method comprising: providing a plurality of spaced apart electron sheets; introducing the input spectrum to the plurality of spaced apart electron sheets such that at least a first portion of the input spectrum transverses the plurality of spaced apart electron sheets; and adjusting the plurality of spaced apart electron sheets so that the first bandwidth is separated from the input spectrum.

BRIEF DESCRIPTION OF THE DRAWINGS

The foregoing aspects and many of the attendant advantages of this invention will become more readily appreciated as the same become better understood by reference to the following detailed description when taken in conjunction with the accompanying drawings.

FIG. **1** is a representative view of an exemplary tunable detection system tuned to a first bandwidth;

FIG. **1**A is a representative view of a portion of the exemplary tunable detection system of FIG. **1**;

FIG. **2** is a representative view of the exemplary tunable detection system of FIG. **1** being tuned to a second bandwidth;

FIG. **3** is a representative view of another exemplary tunable detection system;

FIG. **4** is a representative view of yet another exemplary tunable detection system;

FIG. **5** is a representative view of another is a representative view of yet another exemplary tunable detection system having a plurality of non-imaging detectors;

FIG. **6** is a representative view of yet another exemplary tunable detection system having a plurality of non-imaging detectors;

FIG. **7** is a representative view of yet another exemplary tunable detection system having a plurality of non-imaging detectors;

FIG. **8** is a representative view of another is a representative view of yet another exemplary tunable detection system having a plurality of imaging systems;

FIG. **8**A is a representative view of an exemplary imaging system;

FIG. **9** is a representative view of yet another exemplary tunable detection system having a plurality of imaging systems;

FIG. **10** is a representative view of yet another exemplary tunable detection system having a plurality of imaging systems;

FIG. **11** is a representative view of a portable detection system which is monitoring a piece of luggage in a detection zone;

FIG. **12** is a representative view of the portable detection system of FIG. **11** wherein the luggage is radiated by an energy source located opposite of the portable detection system;

FIG. **13** is a representative view of the portable detection system of FIG. **11** wherein the luggage is radiated by an energy source located generally on the same side of the luggage as the portable detection system;

FIG. **14** is a representative view of a luggage scanning system;

FIG. **15** is a representative view of the information stored on a memory accessible by a controller of any of the preceding detection systems wherein the operator specifies a characteristic of the bandwidth to be detected by the respective detection system;

FIG. **16** is a representative view of the information stored on a memory accessible by a controller of any of the preceding detection systems wherein the operator specifies a target to be detected by the respective detection system;

FIG. **17** is a representative processing sequence of the detection software executed by the controller of any of the preceding detection systems;

FIG. **18** is a representative processing sequence of the detection software executed by the controller of any of the preceding detection systems;

FIG. **19** illustrates an arrangement to provide interlaced electron sheets; and

FIG. **20** illustrates an arrangement to provide interlaced electron sheets.

Corresponding reference characters indicate corresponding parts throughout the several views. Although the drawings represent embodiments of various features and components according to the present disclosure, the drawings are not necessarily to scale and certain features may be exaggerated in order to better illustrate and explain the present disclosure. The exemplification set out herein illustrates embodiments of

the invention, and such exemplifications are not to be construed as limiting the scope of the invention in any manner.

DETAILED DESCRIPTION OF THE DRAWINGS

For the purposes of promoting an understanding of the principles of the invention, reference will now be made to the embodiments illustrated in the drawings, which are described below. The embodiments disclosed below are not intended to be exhaustive or limit the invention to the precise form disclosed in the following detailed description. Rather, the embodiments are chosen and described so that others skilled in the art may utilize their teachings. It will be understood that no limitation of the scope of the invention is thereby intended. The invention includes any alterations and further modifications in the illustrated devices and described methods and further applications of the principles of the invention which would normally occur to one skilled in the art to which the invention relates.

Referring to FIG. **1**, a tunable detection system **100** is shown. Detection system **100** includes a tunable bandwidth selector **102** which is supported on a support **104**. Support **104** may be any suitable type of support and may include a frame for securing the components of tunable bandwidth selector **102** and a housing for enclosing tunable bandwidth selector **102**. In one embodiment, support provides a sealed cavity including the tunable bandwidth selector **102**. The sealed cavity may define a vacuum medium **103**. The sealed cavity may include other types of medium **103**, such as a gas and other suitable mediums.

Tunable bandwidth selector **102** receives electromagnetic radiation **106** which includes a plurality of different wavelengths generally referred to herein as an input spectrum **108**. For illustration of the operation of tunable bandwidth selector **102**, input spectrum **108** is represented as having six bandwidths **110**A-**110**F. Each of bandwidths **110**A-F may be comprised of a single wavelength or a plurality of wavelengths. Of course input spectrum **108** may be composed of numerous bandwidths spanning various traditional spectral bands including white light, ultraviolet, infrared, and other spectral bands.

Tunable bandwidth selector **102** functions to separate a first bandwidth from the remainder of input spectrum **108**, if the first bandwidth is present in input spectrum **108**. In one embodiment, the first bandwidth is a spectrum centered on a specific wavelength. In one embodiment, the first bandwidth is a single wavelength.

Referring to FIG. **1**, tunable bandwidth selector **102** includes a plurality of spaced apart electron sheets **112**A-G. Electromagnetic radiation **106** moves generally in direction **114** such that input spectrum **108** encounters electron sheets **112**. Each of electron sheets **112** is comprised of a plurality of electrons which are provided by an electron source **118** and are traveling towards a charged plate **120**. An exemplary electron source is a heated filament which is heated by a power supply **122**. An exemplary power supply is a high voltage DC source. In one example, the high voltage DC source may be modulated between zero volts and a first voltage. The first voltage should be of a value to create the electron sheets **112**. In one example, the first voltage is high enough to create the electron sheets and to vary the electron density of the electron sheets. In one embodiment, a variable AC source may be used to produce a modulated waveform. In one embodiment, one or more function generators may be used to produce a modulated density in the electron sheets **112**. A variation in the density of an electron sheet **112** changes the index of refraction of the electron sheet **112**.

The plurality of electron sheets **112** are spaced apart from adjacent electron sheets **112**. In one embodiment, the spacing of electron sheets **112** is constant. In one embodiment, the spacing of electron sheets **112** is constant between adjacent sheets, but differs across the collection of electron sheets **112**. Although seven electron sheets **112** are shown tunable bandwidth selector **102** may include less electron sheets **112** or more electron sheets **112**. In one embodiment, electron sheets **112** are generally planar sheets. In one embodiment, electron sheets **112** are generally cylindrical sheets. Additionally the cylindrical electron sheets can be of a fixed radius of curvature, a variable radius of curvature, or have an elliptical curvature where the radius varies as a function of position.

Each of electron sheets **112** pass through a medium **103** in the region wherein electron sheets **112** are provided. Medium **103** has a first index of refraction, n_1. Electron sheets **112** have a second index of refraction n_2 which differs from n_1. As electromagnetic radiation **106** moves in direction **114**, the difference in index of refraction between electron sheets **112** and medium **103** and the spacing of electron sheets **112** causes a first bandwidth of input spectrum **108** to be generally separated from the remainder of input spectrum **108**. The first bandwidth is generally reflected by tunable bandwidth selector **102** and the remainder of input spectrum **108** is generally passed by tunable bandwidth selector **102**.

A central wavelength of the first bandwidth is provided by the relationship in equation 1

$$\lambda_{fb}=(n_1+n_2)d \tag{1}$$

Wherein λ_{fb} is the central wavelength, n_1 is the index of refraction of medium **103**, n_2 is the index of refraction of electron sheets **112**, and d is the spacing of electron sheets **112**. The first bandwidth is provided by the relationship in equation 2

$$\Delta\lambda=2(n_2-n_1)(1/\pi)\lambda_{fb} \tag{2}$$

wherein $\Delta\lambda$ is the first bandwidth, λ_{fb} is the central wavelength, n_1 is the index of refraction of medium **130**, n_2 is the index of refraction of electron sheets **112**, and π is a constant.

As provided by equations 1 and 2, the first bandwidth separated by tunable bandwidth selector **102** may be adjusted by adjusting various parameters including the index of refraction of medium **103**, the index of refraction of electron sheets **112**, a spacing of electron sheets **112**, and combinations thereof.

The index of refraction of medium **103** may be adjusted by changing the medium of medium **103**. In one embodiment, the index of refraction of medium **103** may be adjusted by changing a temperature of the medium of medium **103**.

The index of refraction of electron sheets **112** may be adjusted by changing a density of electrons in electron sheets **112**. The density of the electron sheets is dependent upon the temperature of the electron emitting filament, the dimensions of the output aperture which establishes the geometry of the electron plane, the potential difference establishing the electron plane, the medium into which the electron planes are injected, the distance the electron plane travels, and the energy of the electron plane. In one embodiment the density of electron sheets **112** may be changed by kilo electron Volts for one particular set of index of refraction and by mega electron volts for other particular variations for a required range of indexes of refraction. In one embodiment the index of refraction of electron sheets **112** may be determined by the relationship of equation 3

$$n = 1 + \frac{\lambda_0 + \beta|A|^2}{k_s} \tag{3}$$

wherein n is effective index of refraction, 1 is the index of refraction resultant from being in a vacuum, λ_0 is the fundamental wavelength, β is the radiation field modifier which is a function of wave-number and variations in the energy of the electron beam, A is the amplitude of the radiation field, and k_s is the wave-number of the radiation field. In another embodiment where the electron sheets are produced by a plasma or result in the creation of a plasma the index of refraction of electron sheets **112** may be determined by the relationship of equation 4

$$n = \sqrt{1 - \frac{N_{elec}}{N_{crit}}} \tag{4}$$

wherein n is effective index of refraction, N_{elec} is the electron density of the plasma, and N_{crit} is the plasma critical density.

The spacing of electron sheets **112** may be changed by adjusting the relative location of electron sheets **112**. Referring to FIG. **1**, electron sheets **112** are generated by electrons provided by electron source **118** traveling towards charged plate **120**. These electrons are formed into electron sheets **112** as they pass through openings **138**, such as rectangular slits, in a charged filter plate **136** and extend through a detection area including medium **103** (in this case a vacuum) to charged plate **120** as represented in FIG. **1**A. FIG. **1**A illustrates the initial spacing of the electron sheets **112** (without the influence of magnetic field **140**). The initial spacing of electron sheets **112** is set by the spacing of the openings **138** wherein the electron sheets **112** travel straight down to charged plate **120**.

In addition to the electron sheets **112** shown in FIG. **1**A, additional sets of electron sheets **112** may be generated by additional sets of electron sources **118** and charged plates **120**. Referring to FIG. **19**, electron source **118** is represented with electrons traveling in direction **142** (also shown in FIG. **1**A) towards charged plate **120**. An additional electron source **118**A and charged plate **120**A are also provided (along with charged plate **136**A and devices **141**A which produce a magnetic field to alter the spacing of the electron sheets produced by the combination of electron source **118**A and charged plates **136**A and **120**A). Electrons travel in direction **144** (also shown in FIG. **1**A) from electron source **118**A towards charged plate **120**A. In one embodiment, this additional set of electron source **118**A and charged plate **120**A may produce a plurality of spaced apart electron sheets which are interlaced between the electron sheets **122** of electron source **118** and charged plate **120**. For example, a first electron sheet corresponding to source **118**A may be positioned between electron sheet **112**A and **1128** and a second electron sheet corresponding to source **118**A may be positioned between electron sheet **112**B and **112**C. Assuming that the electron sheets corresponding to source **118**A are equally spaced from the surrounding electron sheets corresponding to source **118**, then the spacing between the collective electron sheets is halved. The spacing of all of the electron sheets may be varied based on the methods discussed herein. Referring to FIG. **20**, the arrangement of FIG. **19** is further generalized to include a third electron source **118**B and a third charged plate **120**B which produce a third set of electron sheets (along with charged plate **136**B and devices **141**B which produce a magnetic field to alter the spacing of the electron sheets produced by the combination of electron source **118**B and charged plates **136**B and **120**B). The electron sheets corresponding to sources **118**, **118**A, and **118**B travel in directions **142**, **146**, and **148**, respectively. The three sets of electron sheets may be interlaced to result in even further narrowing of the spacing between the collective electron sheets. Any number of electron sources and charged plates may be used to provide further narrowing of the spacing of the collective electron sheets.

In one embodiment, a magnetic field **140** may be introduced to alter the spacing of the electron planes **120**. By controlling the strength of the magnetic field **140** the spacing of electron sheets **112** may be altered. A plurality of devices **141** are provided to control the overall magnetic field **140** in a localized manner meaning that the field strength of magnetic field **140** may differ at different locations based on the magnetic fields produced by the devices **141** proximate to the respective locations. In one embodiment, a plurality of microelectronic mechanical structures ("MEMS") are provided to control the strength of the magnetic field **140** by controlling their own localized and isolated magnetic fields. Each of the MEMS devices are controlled by controller **150**. Thus, controller **150** is able to vary the magnetic field differently relative to different MEMS devices to steer the electron sheets as desired. In one embodiment, individual isolated magnetic cores are provided to control the strength of the magnetic field **140** by controlling their own localized and isolated magnetic fields. In one embodiment, the magnetic cores are selected from either C, U, and I-shaped cores with high permeability to direct magnetic fields. In one embodiment, the magnetic cores are tapered to provide a small cross-section in the area corresponding to the electron beams. In one embodiment, the magnetic cores are laminated to prevent cross-currents or eddy currents. Each of the magnetic cores are controlled by controller **150**. Thus, controller **150** is able to vary the magnetic field differently relative to different magnetic cores to steer the electron sheets as desired.

In one embodiment, the strength of magnetic field **140** is controlled by a controller **150** having software provided on a memory **152** accessible by controller **150**. As explained herein, controller **150** may alter one or more of the index of refraction of medium **103**, the index of refraction of electron sheets **112**, a spacing of electron sheets **112**, and combinations thereof. As such, tunable bandwidth selector **102** may be tunable to select different bandwidths at different times. In this manner, tunable bandwidth selector **102** may be used to monitor a region for a plurality of different bandwidths. As is known various targets give off characteristic electromagnetic spectrum. As such, with detection system **100** a specific type of target may be detected based on the presence and/or the magnitude of the various wavelengths that are monitored. Examples include chemical monitoring, biological monitoring, airport security systems, chemical and biological agent detection, explosives detection, spectral imaging, scanning system, and any other applications whereby an investigator is attempting to identify the presence of a target.

In one embodiment, the tuning of tunable bandwidth selector **102** to a specific bandwidth may be provided through an operator input **142**. Exemplary operator inputs include buttons, switches, dials, a touch screen, a graphical user interface, and a file providing the bandwidths for tuning.

Referring to FIG. **1**, the index of refraction of medium **103**, the index of refraction of electron sheets **112**, and a spacing of electron sheets **112** are selected to separate spectrum **110**C from the remainder of input spectrum **108**. As shown in FIG. **1**, spectrum **110**C travels in direction **116** while the remainder of input spectrum **108** continues to travel in direction **114**. Referring to FIG. **2**, at least the spacing of electron sheets **112** is altered which results in spectrum **110**E being selected to be separated from the remainder of input spectrum **108**. As

shown in FIG. **2**, spectrum **110**E travels in direction **116** while the remainder of input spectrum **108** continues to travel in direction **114**.

The spacing of electron sheets **112** may be altered by changing the localized magnetic field **140**. In one embodiment, the spacing of electron sheets **112** may be adjusted from about 0.100 microns to about 20 microns. Each embodiment covers a specific spectral range of interest and the electron plane spacing and index of refraction are appropriately varied to cover the spectral response of the optics, the detector, as well as the spectral bandwidth of interest. In one embodiment, the range of spacing needed requires even larger spacing between electron sheets **112**. As shown in equation 1 as the spacing between electron sheets **112** increases, the central wavelength of the first bandwidth also increases.

Referring to FIG. **3**, one embodiment for increasing the separation between adjacent electron sheets **112** is shown. In FIG. **3**, a plurality of power supplies **122** are coupled to a plurality of electron sources **118**. In the illustrated embodiment, each of openings **138** has a corresponding electron source **118** positioned relative thereto. Further, a series of electron sources **118** are each tied to the same power supply **122**. As illustrated, a first power supply **122** provides power to electron sources **118**A, **118**C, **118**E, and **118**G and a second power supply **122** provides power to electron sources **1188**, **118**D, and **118**F. One way to increase the spacing between electron sheets **112** is to selectively turn off the power to one of power supply **122**A and power supply **1228**. This results in the remaining electron sheets **112** having a spacing double of when all of electron sheets **112** are present. Although two power supplies **122** are shown, any number of power supplies having multiple electron source **118** tied thereto may be used.

Referring to FIG. **4**, another arrangement for increasing the spacing of electron sheets **112** is shown wherein each of electron sources **118**A-G has an independent power supply **122**A-G. The spacing between electron sheets **112** may be increased in this arrangement by selectively turning off power to various ones of power supply **122**. In one embodiment, the resultant spacing between the remaining electron sheets **112** is constant. In one embodiment, the resultant spacing between the remaining sheets **112** is variable.

In one embodiment, electron sheets **112** are apodized. This reduces the strength of any side lobes (unwanted bandwidth which is directed in direction **116**). In an apodized example, the electron sheets **112** towards the ends of the collection of electron sheets **112** are closer in index of refraction to the index of refraction of medium **103**, while in the center of the collection of electron sheets **112** the index of refraction is more distinct from the index of refraction of medium **103**. In one embodiment, this is accomplished by altering the density of electrons in the respective electron sheets **112**. In one embodiment, the change in index of refraction of electron sheets **112** follows a generally Gaussian profile. In one embodiment, the change in index of refraction of electron sheets **112** follows a generally raised-cosine profile.

In one embodiment, the spacing of electron sheets **112** is non-constant resulting in a chirped grating. This has the effect of broadening the range of wavelengths included within the first bandwidth.

As pictured in FIG. **1**A, electron sheets **112** are generally normal to the direction of travel, direction **114**, of electromagnetic radiation **106**. In one embodiment, electron sheets **112** are tilted relative to the direction of travel of electromagnetic radiation **106**. This embodiment may change the center wavelength, the effective spectral range of the device, and may move the final incident location of the reflected wavelength.

Referring to FIG. **5**, a detection system **210** is shown. Detection system **210** includes one of the arrangements of tunable bandwidth selector **102** shown in FIGS. **1-4** provided in a housing **211**. Electromagnetic radiation **106** is introduced into housing **211** through input optics **212**. In one embodiment, input optics **212** are simply an optical window. In one embodiment, input optics **212** includes refractive and/or reflective optics having some power to direct electromagnetic radiation **106** towards tunable bandwidth selector **102**. In one embodiment, input optics **212** includes filters and/or polarizers to limit the range of electromagnetic radiation **106** entering tunable bandwidth selector **102**.

Input optics **212** presents electromagnetic radiation **106** to a notched beamsplitter **218** which passes a portion of electromagnetic radiation **106** onto tunable bandwidth selector **102**. As explained herein, tunable bandwidth selector **102** separates a first bandwidth from the remainder of electromagnetic radiation **106**. The first bandwidth travels in direction **116** back towards notched beamsplitter **218**. Notched beamsplitter **218** redirects a portion of the first bandwidth towards a detector **214**. The remainder of the input spectrum travels in direction **114** and passes out of tunable bandwidth selector **102** towards a detector **216**. In one embodiment, detector **214** and detector **216** are non-imaging detectors selected for their responsive to the various bandwidths being observed by detection system **210**. Exemplary detectors include Si for 0.4 to 0.9 microns, InGaAs for 0.9 to 1.7 microns bandwidth, InSb for 3 to 5 microns bandwidth, vanadium oxide for 8 to 14 microns, and other commercially available detectors to respond to specific commercial applications requiring observation of particular bandwidths, specifically there are detectors coupled with fixed optical filters capable of detecting any bandwidth of interest. In one embodiment, the detector is selected for microwave bandwidths. In one embodiment, detector **214** is a focal plane array which is capable of measuring the power of hyperfine lines in the electromagnetic spectrum reflected by the bandwidth selector **102**. In one embodiment, detector **214** is a single detector element which is capable of measuring the power of hyperfine lines in the electromagnetic spectrum reflected by the bandwidth selector **102**. In one embodiment, detector **214** is a focal plane array which is capable of measuring the absences of the power of the hyperfine lines in the electromagnetic spectrum not transmitted by the bandwidth selector **102**. In one embodiment, detector **214** is a single detector element which is capable of measuring the absence of the power of hyperfine lines in the electromagnetic spectrum not transmitted by the bandwidth selector **102**.

Each of detectors **214** and **216** are operatively coupled to controller **150** and provide an indication to controller **150** of the intensity of the first bandwidth (detector **214**) and the overall intensity of electromagnetic radiation **106** (detector **216**). In one embodiment, detector **216** is positioned opposite detector **214** relative to notched beamsplitter **218** to receive the portion of electromagnetic radiation **106** including the first bandwidth reflected by beamsplitter **218**.

Controller **150** based on the intensity level from detector **214** makes a determination of the presence or absence of a specific target corresponding to the first bandwidth tunable bandwidth selector **102** is tuned to separate from electromagnetic radiation **106**. In one embodiment, controller **150** compares the intensity level from detector **216** to the intensity level from detector **214** to reduce false positives. In one embodiment, controller **150** compares the intensity level from detector **214** to the previously recorded intensity levels of detector **214** for other wavelengths to reduce false positives. In one embodiment, controller **150** cycles tunable band-

width selector **102** through various bandwidths to determine the presence or absence of a variety of targets or as confirmation of a single type of target. Some targets have several characteristic bandwidths associated therewith. Further, in a given situation multiple targets may be being scanned for the presence of in an ambient environment or as part of a detection zone.

In another embodiment, several detection systems **210** are provided as part of a detection system **220** as shown in FIG. **6**. In the embodiment shown in FIG. **6**, several individual detection systems **210** are used in concert to detect the presence or absence of various targets. This reduces the range of selection needed for a single tunable bandwidth selector **102**. For instance, the tunable bandwidth selector **102** of detection system **210**A may be searching for bandwidths within a first bandwidth range while tunable bandwidth selector **102** of detection system **210**B may be searching for bandwidths within a second bandwidth range. Although each of detection system **210**A and detection system **210**B are shown having a separate controller **150** and a separate memory **152**, in one embodiment, detection system **210**A and detection system **210**B share a common controller **150** and memory **152**.

Referring to FIG. **7**, another detection system **210'** is shown. Detection system **210'** is the same as detection system **210**, except that a second channel with a second tunable bandwidth selector **102** is added. The second channel interacts with the electromagnetic radiation **106** initially reflected by notched beamsplitter **218**. The electromagnetic radiation **106** reflected by notched beamsplitter **218** encounters a second beamsplitter **232** which passes a portion of electromagnetic radiation **106** onto a second tunable bandwidth selector **102**. The second tunable bandwidth selector **102** is under the control of controller **150** which tunes tunable bandwidth selector **102** to a desired bandwidth. If the desired bandwidth is present in electromagnetic radiation **106**, the desired bandwidth is separated from the remainder of electromagnetic radiation **106** by the second tunable bandwidth selector **102** and is detected by a second detector **214**. The remainder of electromagnetic radiation **106** is passed onto detector **216**.

It should be noted that controller **150** will take into account the reduced intensity levels associated with the second channel relative to the first channel in determining the presence or absence of a given target.

Referring to FIGS. **9**-**10**, three detection systems **250**, **252**, and **250'** are shown. Each of detection systems **250**, **252**, and **250'** are the same as respective detection systems **210**, **220**, and **210'** described herein, except that detectors **214** and **216** are replaced with imaging systems **260** and **262**, respectively. Imaging systems **260** and **262** provide an image of the scene of detection zone **200**.

In one embodiment, as shown in FIG. **8**A imaging systems **260** includes image forming optics **264** and an image detector **266**. Image forming optics **264** include any suitable optical devices for forming an image of the scene in detection zone **200**. In one embodiment, image forming optics **264** includes a zoom feature to focus on various regions of detection zone **200**. Exemplary image detectors **266** include charge-coupled devices and any other suitable devices for recording an image of detection zone **200**. As explained herein, controller **150** may use imaging systems **260** and **262** together to indicate the location of a detected target.

Referring to FIG. **11**, a portable detection device **301** is shown. Portable detection device **301** includes a detection system **300**. Detection system **300** may be any of the detection systems disclosed herein. Detection system **300** is provided in a housing **302** having an optical window **304** therein. The portable detection device **301** may take any suitable shape. In one embodiment, portable detection device **301** is shaped like a hand-held device, similar to a rifle or wand, allowing an operator to easily point and aim portable detection device **301**.

Portable detection device **301** is shown in conjunction with a piece of luggage **310**. Portable detection device **301** examines the electromagnetic radiation **106** provided by luggage **310** to determine the contents of luggage **310** or targets otherwise carried on the surface of the luggage **310**. Referring to FIG. **12**, in one embodiment, luggage **310** is radiated by electromagnetic radiation **314** provided by an energy source **312**. In one embodiment, electromagnetic radiation **314** is selected to excite the emission of a specific first bandwidth if the corresponding target is present in or on the luggage **310**. Since energy source **312** is positioned on an opposite side of luggage **310** than portable detection device **301**, portable detection device **301** looks at electromagnetic radiation **106** based on the transmission or emission of electromagnetic radiation. Another embodiment is shown in FIG. **13** wherein energy source **312** is positioned on the same side of luggage **310** as portable detection device **301**. As such, portable detection device **301** looks at electromagnetic radiation **106** based on the reflectance or emission of electromagnetic radiation from luggage **310**.

Referring to FIG. **14**, a scanning system **328** is shown. Scanning system **328** includes a conveyor system **332** including a transport member **333** moveable in direction **336** and direction **338**. Exemplary transport members **333** include belts. As a piece of luggage **310** supported by transport member **333** moves in direction **336** it passes into a housing **334**. Inside of housing **334** an energy source **312** radiates luggage **310**. Electromagnetic radiation **106** produced by luggage **310** is detected by a detection system **330**. Detection system **330** may be any of the detection systems disclosed herein. In one embodiment, detection system **330** is an imaging system. Controller **150** of detection system **330** provides an output signal to a monitor **340**.

Referring to FIG. **15**, in one embodiment, memory **152** includes detection software **350**. In one embodiment, detection software **350** receives an input characteristic **352** of a first bandwidth to detect, illustratively a central wavelength of the first bandwidth. Detection software **350** provides the instructions to controller **150** for setting the tunable bandwidth selector **102** to separate the first bandwidth, if present, from the remainder of input spectrum **108**. The instructions may include a spacing of electron sheets **112**, a density of electron sheets **112**, and an index of refraction of medium **130**. Detection software **350** receives from the detectors of the detection system an indication of the amount of first bandwidth present in input spectrum **108**. Based on these detected values, detection software **350** provides an output indication of whether the first bandwidth is detected, as represented by detection parameter **354**. In the case wherein the detectors are imaging detectors, detection software **350** may provide an image **356** representative of the location of the first bandwidth in the field of view.

Referring to FIG. **16**, instead of receiving an input characteristic **352** detection software **350** receives a specific target to detect as represented by detection target input parameter **360**. Detection software **350** then through a database **362** looks up the characteristics **366** of the bandwidths that are representative of the presence of a specified detection target **364**. In one embodiment, such as for target A a single first bandwidth is to be examined. In one embodiment, such as for target B a plurality of spaced apart bandwidths are to be examined. In one embodiment, such as for target C a range of first bandwidths are to be examined.

Referring to FIG. **17** an exemplary processing sequence **380** of detection software **350** is shown. Detection software **350** receives a detection type input, as represented by block **382**. In one embodiment, the detection type input is one or more characteristics of one or more bandwidths to be examined. In one embodiment, the detection type input is one or more detection targets to be examined. In either case, a plurality of inputs may be provided in a database or input file and detection software **350** adjusts the respective tunable bandwidth selector **102** sequentially for each input. In this situation, the operation of detection software **350** may automatically cycle through a plurality of inputs. This is useful in setups such as shown in FIG. **14** wherein a plurality of items are sequentially examined in a scanning system.

As mentioned above, based on the input received detection software **350** adjusts the respective tunable bandwidth selector **102** to select a bandwidth corresponding to the current detection type input, as represented by block **384**. Detection software **350** then detects the radiation levels with the respective detectors of the detection system, as represented by block **386**. Based on the detected levels, detection software **350** determines if a detection of the specific bandwidth is confirmed, as represented by block **388**. In one embodiment, detection is confirmed if the detected level exceeds a threshold value.

If detection is not confirmed then detection software **350** provides an indication that the detection is not confirmed, as represented by block **390**. The indication may be one of audio, tactile, visual, or a combination thereof. In one embodiment, the indication is simply permitting the continued operation of a system, such as transport member **333** moving in direction **336** in FIG. **14**.

If detection is confirmed then detection software **350** provides an indication that the detection is confirmed, as represented by block **392**. The indication may be one of audio, tactile, visual, or a combination thereof. In one embodiment, the indication is simply blocking the continued operation of a system, such as transport member **333** moving in direction **336** in FIG. **14**.

Referring to FIG. **18**, an exemplary processing sequence **393** for when detection is confirmed is shown for an imaging detection system. Detection software **350** provides an image of the object being interrogated, as represented by block **394**. In the case of luggage **310** in FIG. **14**, monitor **340** displays an image **342** of luggage **310**. In one embodiment, the image **342** of luggage **310** is provided by an imaging system receiving the radiation not separated by the tunable bandwidth selector **102**, such as imaging system **262** in FIG. **8**. Detection software **350** determines a location of the detected item in luggage **310**, as represented by block **396**. In one embodiment, an imaging system **260** provides an image of luggage **310** in the separated first bandwidth. Detection software **350** then determines which pixels are above the threshold value. These pixels are then flagged as corresponding to the location of the object being detected. Detection software **350** provides an indication of the location of the detected target on the image of luggage **310**, as represented by block **398**. In one embodiment, detection software **350** superimposes the image provided by imaging system **260** over the image provided by imaging system **262**. In situations where in the image provided by imaging system **260** is not in the visible spectrum, a visible spectrum representation of the target is provided as an image for display. The detected object or target **344** is shown by monitor **340**. In one embodiment, detection software **350** simply provides a marker or other representation of the target on the image produced by the imaging system **262**. In one example, the image produced by imaging system **262** is in the visible spectrum.

In one embodiment, the first bandwidth is selected to provide an image of the contents of the luggage. In one embodiment, the first bandwidth is in the millimeter wavelength range at which non-metallic items are generally transparent. In this manner, an image is formed from the first bandwidth which indicates opaque items at that wavelength, such as metallic items. The image formed by the light passing through tunable bandwidth selector **102** may form a traditional visible light image. Controller, based on the image formed from the first bandwidth may light a location of a metallic item in the visible light image for further investigation. This may be beneficial in the case of scanning human subjects to maintain the privacy of the subject during scanning.

While this invention has been described as having an exemplary design, the present invention may be further modified within the spirit and scope of this disclosure. This application is therefore intended to cover any variations, uses, or adaptations of the invention using its general principles. Further, this application is intended to cover such departures from the present disclosure as come within known or customary practice in the art to which this invention pertains.

The invention claimed is:

1. A tunable bandwidth selector for separating one of a first bandwidth and a second bandwidth from an input spectrum including the first bandwidth and the second bandwidth, the tunable bandwidth selector comprising:

at least one source of electrons;

a first apparatus which arranges at least a portion of the electrons produced by the at least one source of electrons in a plurality of spaced apart electron sheets; and

a second apparatus which alters a spacing of the plurality of spaced apart electron sheets, wherein a first spacing of the plurality of spaced apart electron sheets results in the first bandwidth being separated from the input spectrum and a second spacing of the plurality of spaced apart electron sheets results in the second bandwidth being separated from the input spectrum;

wherein the first apparatus includes a first charged plate with a plurality of slits provided therein and a second charged plate spaced apart from the first charged plate, the plurality of spaced apart electron sheets being formed by electrons passing through the plurality of slits and traveling to the second charged plate.

2. The tunable bandwidth selector of claim **1**, wherein the second apparatus produces a magnetic field which alters the spacing of the plurality of spaced apart electron sheets.

3. The tunable bandwidth selector of claim **2**, wherein the second apparatus includes a plurality of devices which each provide a localized and isolated magnetic field and wherein the localized and magnetic fields produce the magnetic field which alters the spacing of the plurality of spaced apart electron sheets.

4. The tunable bandwidth selector of claim **2**, wherein the plurality of electron sheets are each planar.

5. The tunable bandwidth selector of claim **2**, wherein the at least one electron source includes a plurality of electron sources and the spacing of the plurality of electron sheets is in part altered by limiting a number of active electron sources.

6. The tunable bandwidth selector of claim **1**, wherein the plurality of electron sheets are divided into at least a first plurality of electron sheets produced by at least a first electron source and a second plurality of electron sheets produced by

at least a second electron source, the second plurality of electron sheets being interlaced with the first plurality of electron sheets.

7. The tunable bandwidth selector of claim **6**, wherein the first electron source is oriented orthogonal to the second electron source.

8. A tunable bandwidth selector for separating one of a first bandwidth and a second bandwidth from an input spectrum including the first bandwidth and the second bandwidth, the tunable bandwidth selector comprising:

input optics which are adapted to direct the input spectrum along a first axis;

at least one electron source positioned to a first side of the first axis;

at least a first charged plate which is positioned to a second side of the first axis opposite the at least one electron source;

at least a second charged plate which is positioned between the at least one electron source and the at least first charged plate, the at least second charged plate adapted to filter the electrons produced by the at least one electron source into a plurality of spaced apart electron sheets; and

a control system which is configured to alter a spacing of the plurality of spaced apart electron sheets, a first spacing of the plurality of spaced apart electron sheets corresponding to the first bandwidth being separated from the input spectrum and a second spacing of the plurality of spaced apart electron sheets corresponding to the second bandwidth being separated from the input spectrum.

9. The tunable bandwidth selector of claim **8**, wherein the control system includes a plurality of devices which generate a plurality of localized magnetic fields, the localized magnetic fields altering a direction of travel of the electrons in the plurality of electron sheets.

10. The tunable bandwidth selector of claim **9**, wherein the plurality of devices are micro-electronic mechanical structures.

11. The tunable bandwidth selector of claim **9**, wherein the plurality of devices are magnetic cores.

12. The tunable bandwidth selector of claim **11**, wherein the plurality of magnetic cores are each laminated to reduce eddy currents between the magnetic cores.

13. A tunable bandwidth selector for separating one of a first bandwidth and a second bandwidth from an input spectrum including the first bandwidth and the second bandwidth, the tunable bandwidth selector comprising:

at least one source of electrons;

a first apparatus which arranges at least a portion of the electrons produced by the at least one source of electrons in a plurality of spaced apart electron sheets; and

a second apparatus which alters a spacing of the plurality of spaced apart electron sheets, wherein a first spacing of the plurality of spaced apart electron sheets results in the first bandwidth being separated from the input spectrum and a second spacing of the plurality of spaced apart electron sheets results in the second bandwidth being separated from the input spectrum, wherein said second structure is further adapted to produce said plurality of spaced apart electron sheets having a variable index of refraction and a variable spacing;

wherein the first apparatus includes a first charged plate with a plurality of slits provided therein and a second charged plate spaced apart from the first charged plate, the plurality of spaced apart electron sheets being formed by electrons passing through the plurality of slits and traveling to the second charged plate.

14. The tunable bandwidth selector of claim **13**, wherein the second apparatus produces a magnetic field which alters the spacing of the plurality of spaced apart electron sheets.

15. The tunable bandwidth selector of claim **14**, wherein the second apparatus includes a plurality of devices which each provide a localized and isolated magnetic field and wherein the localized and magnetic fields produce the magnetic field which alters the spacing of the plurality of spaced apart electron sheets.

16. The tunable bandwidth selector of claim **13**, wherein the at least one electron source includes a plurality of electron sources and the spacing of the plurality of electron sheets is in part altered by limiting a number of active electron sources.

17. The tunable bandwidth selector of claim **13**, wherein the plurality of electron sheets are divided into at least a first plurality of electron sheets produced by at least a first electron source and a second plurality of electron sheets produced by at least a second electron source, the second plurality of electron sheets being interlaced with the first plurality of electron sheets.

18. The tunable bandwidth selector of claim **17**, wherein the first electron source is oriented orthogonal to the second electron source.

19. The tunable bandwidth selector of claim **13**, wherein the variable index of refraction of the plurality of spaced apart electron sheets is accomplished by at least one of varying a density of the electrons in the plurality of electron sheets and varying a index of refraction of a medium between the sheets of the plurality of electron sheets.

20. A tunable bandwidth selector for separating one of a first bandwidth and a second bandwidth from an input spectrum including the first bandwidth and the second bandwidth, the tunable bandwidth selector comprising:

at least one source of electrons;

a first apparatus which arranges at least a portion of the electrons produced by the at least one source of electrons in a plurality of spaced apart electron sheets; and

a second apparatus which alters a spacing of the plurality of spaced apart electron sheets, wherein a first spacing of the plurality of spaced apart electron sheets results in the first bandwidth being separated from the input spectrum and a second spacing of the plurality of spaced apart electron sheets results in the second bandwidth being separated from the input spectrum, wherein said second structure is further adapted to produce said plurality of spaced apart electron sheets having a variable index of refraction and a variable spacing;

wherein the variable spacing of the plurality of electron sheets is accomplished by varying a spacing of the plurality of spaced apart electron sheets.

21. The tunable bandwidth selector of claim **20**, wherein a first portion of the plurality of spaced apart electron sheets are produced by at least a first electron source and a second portion of the plurality of spaced electron sheets are produced by at least a second electron source, the number of the plurality of spaced apart electron sheets being reduced by deactivating the at least second electron source.

22. The tunable bandwidth selector of claim **21**, wherein the electrons in each of the plurality of electron sheets travel in a first direction towards a charged plate.

23. A tunable bandwidth selector for separating one of a first bandwidth and a second bandwidth from an input spectrum including the first bandwidth and the second bandwidth, the tunable bandwidth selector comprising:

at least one source of electrons;

a first apparatus which arranges at least a portion of the electrons produced by the at least one source of electrons in a plurality of spaced apart electron sheets; and

a second apparatus which alters a spacing of the plurality of spaced apart electron sheets, wherein a first spacing of the plurality of spaced apart electron sheets results in the first bandwidth being separated from the input spectrum and a second spacing of the plurality of spaced apart electron sheets results in the second bandwidth being separated from the input spectrum, wherein said second structure is further adapted to produce said plurality of spaced apart electron sheets having a variable index of refraction and a variable spacing;

wherein the plurality of spaced apart electron sheets are apodized to reduce the presence of side lobes in the first portion of the input spectrum.

24. The tunable bandwidth selector of claim **23**, wherein the plurality of spaced apart electron sheets are apodized by varying the density of the electrons in the respective electron sheets, a first electron sheet having a first density and a second electron sheet having a second density, the first electron sheet having a first index of refraction closer to the index of refraction of the medium than a second index of refraction of the second electron sheet, the second electron sheet being in a middle of the plurality of spaced apart electron sheets.

* * * * *