US008573109B2

(12) **United States Patent**
Buechler et al.

(10) **Patent No.: US 8,573,109 B2**
(45) **Date of Patent: Nov. 5, 2013**

(54) **AMMUNITION CANISTER AND FEED SYSTEM**

(75) Inventors: **James Buechler**, Jasper, IN (US); **Michael Holzmeyer**, Bloomfield, IN (US)

(73) Assignee: **The United States of America as represented by the Secretary of the Navy**, Washington, DC (US)

(*) Notice: Subject to any disclaimer, the term of this patent is extended or adjusted under 35 U.S.C. 154(b) by 0 days.

(21) Appl. No.: **13/152,921**

(22) Filed: **Jun. 3, 2011**

(65) **Prior Publication Data**

US 2012/0137863 A1 Jun. 7, 2012

Related U.S. Application Data

(62) Division of application No. 12/571,396, filed on Sep. 30, 2009, now Pat. No. 8,151,684.

(60) Provisional application No. 61/179,615, filed on May 19, 2009.

(51) **Int. Cl.**
F41A 9/61 (2006.01)

(52) **U.S. Cl.**
USPC **89/33.2**; 89/33.1; 89/33.14

(58) **Field of Classification Search**
USPC 89/33.2, 33.1, 33.14, 37.16, 37.22
See application file for complete search history.

(56) **References Cited**

U.S. PATENT DOCUMENTS

167,006	A		8/1875	Metcalfe	
273,249	A		3/1883	Bruce	
1,172,542	A		2/1916	McMullen	
2,415,153	A		2/1947	Trimbach et al.	
2,421,052	A		5/1947	Cantley	
2,568,229	A		9/1951	Gardes	
2,767,617	A		10/1956	Taylor	
3,687,004	A		8/1972	Faisandier	
4,092,900	A		6/1978	Hottinger et al.	
4,256,012	A		3/1981	Cowart et al.	
4,524,670	A		6/1985	Billard et al.	
4,601,445	A		7/1986	Duclos et al.	
4,638,715	A		1/1987	LeBlanc	
4,682,529	A		7/1987	Duclos et al.	
5,206,454	A	*	4/1993	Sanderson	89/33.14
5,263,397	A		11/1993	Sanderson	
5,282,410	A		2/1994	Sanderson	
5,381,721	A		1/1995	Holmstrom et al.	
5,400,690	A		3/1995	Meili et al.	
5,419,234	A		5/1995	Sanderson	
5,554,815	A	*	9/1996	Authie et al.	89/1.59
5,767,436	A	*	6/1998	Sanderson et al.	89/37.22
6,250,197	B1		6/2001	Sanderson	
6,286,411	B1		9/2001	Sanderson	
6,293,179	B1		9/2001	Sanderson	
6,393,960	B1	*	5/2002	Bilger	89/37.03
6,564,690	B1	*	5/2003	Long	89/37.16
6,622,606	B1		9/2003	Neal	
6,675,694	B1		1/2004	Liebig	
6,718,862	B1		4/2004	Sanderson	
6,779,430	B1		8/2004	Sanderson	

(Continued)

Primary Examiner — Michelle Clement
(74) *Attorney, Agent, or Firm* — Christopher A. Monsey

(57) **ABSTRACT**

An armament system for aircraft includes an ammunition system and a mount system for a machine gun. The ammunition system includes an ammunition canister and feed system, the canister having a pair of brackets releasably coupled to a pair of receivers supported by a vertical mounting surface.

1 Claim, 25 Drawing Sheets

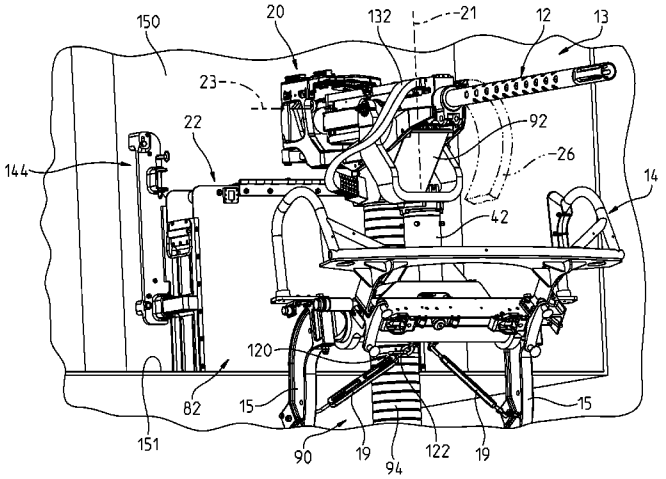

(56) **References Cited**

U.S. PATENT DOCUMENTS

6,796,300	B2	9/2004	Petrosyan et al.	
6,799,500	B1	10/2004	Kulikowski	
6,820,532	B2	11/2004	Sanderson	
7,069,683	B1	7/2006	Kapusta	
7,258,055	B1	8/2007	Javorsky	
7,513,187	B1	4/2009	Lambermont	
7,543,524	B1	6/2009	Javorsky	
7,624,947	B2	12/2009	Dortch et al.	
7,694,620	B1 *	4/2010	Narus	89/33.1
7,765,912	B1 *	8/2010	Serkland	89/37.21
8,069,767	B2 *	12/2011	Deckard et al.	89/33.4
2007/0131103	A1	6/2007	McClellan et al.	
2010/0101401	A1 *	4/2010	Toeckes et al.	89/1.51

* cited by examiner

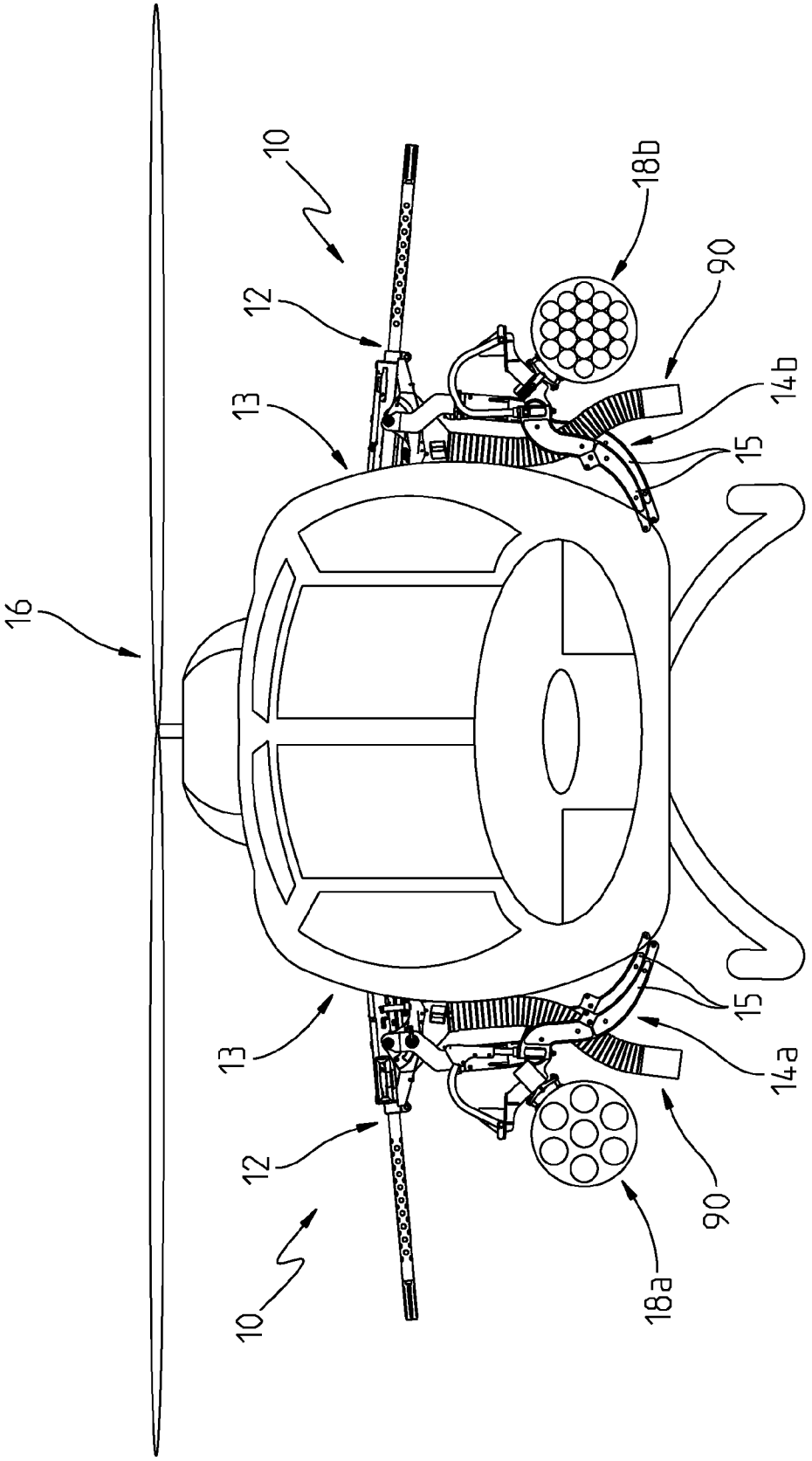

FIG. 1

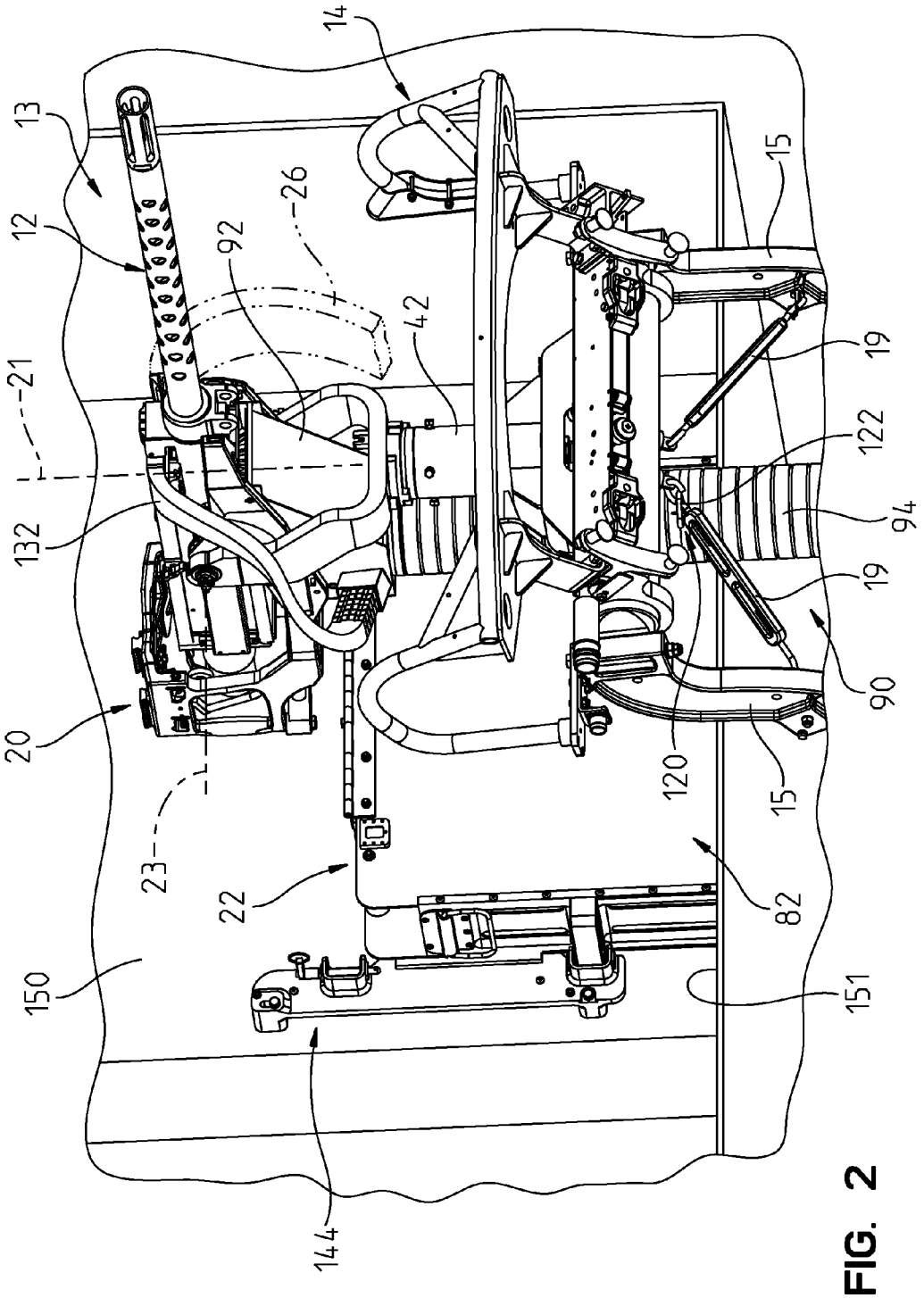
14
13
12
26
92
42
21
132
20
23
22
150
144
15
19
122
94
19
90
120
15
82
151

FIG. 2

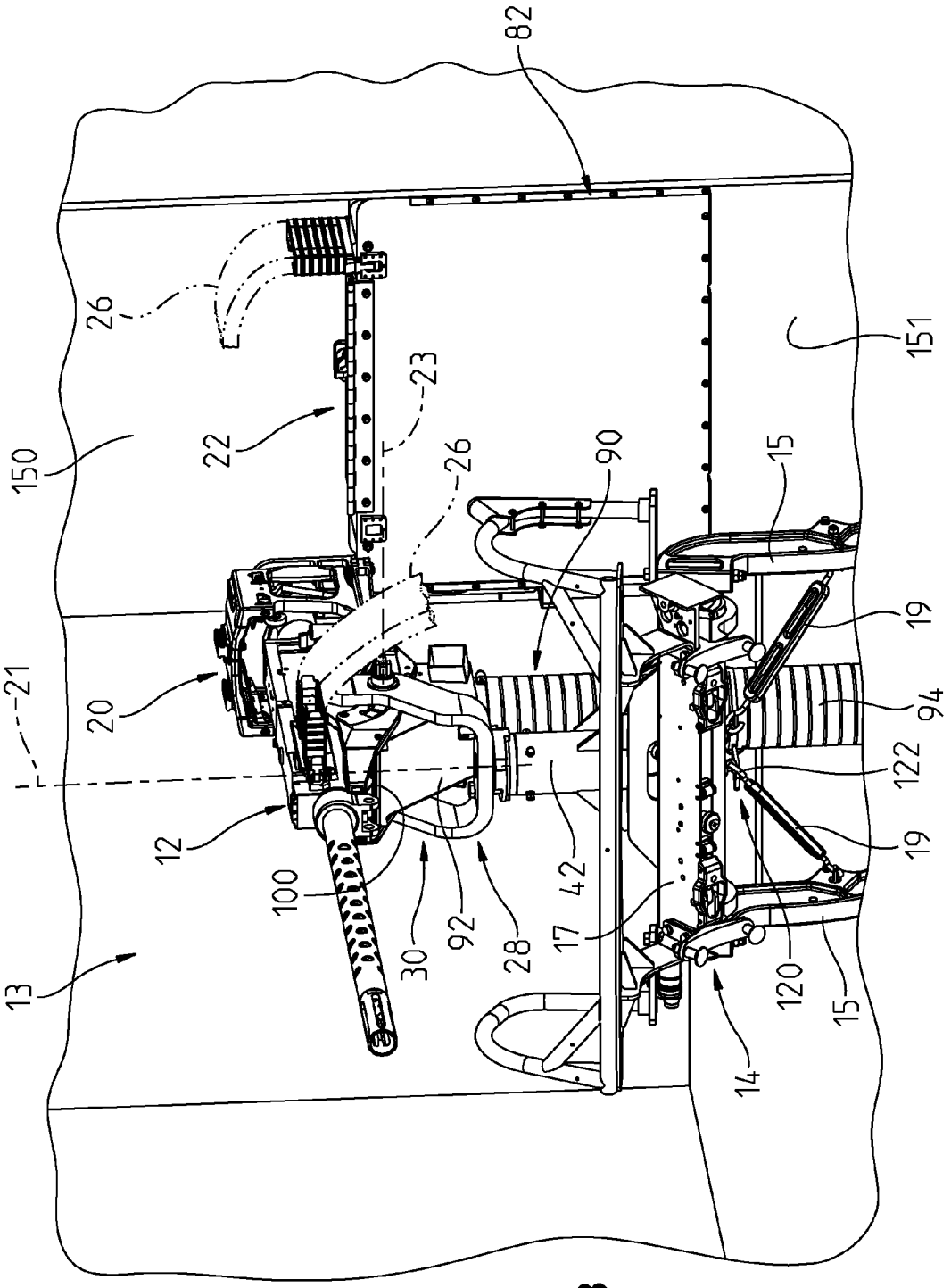
82
26
23
22
150
26
90
15
151
19
94
122
19
21
20
12
100
30
92
28
42
17
120
15
14
13

FIG. 3

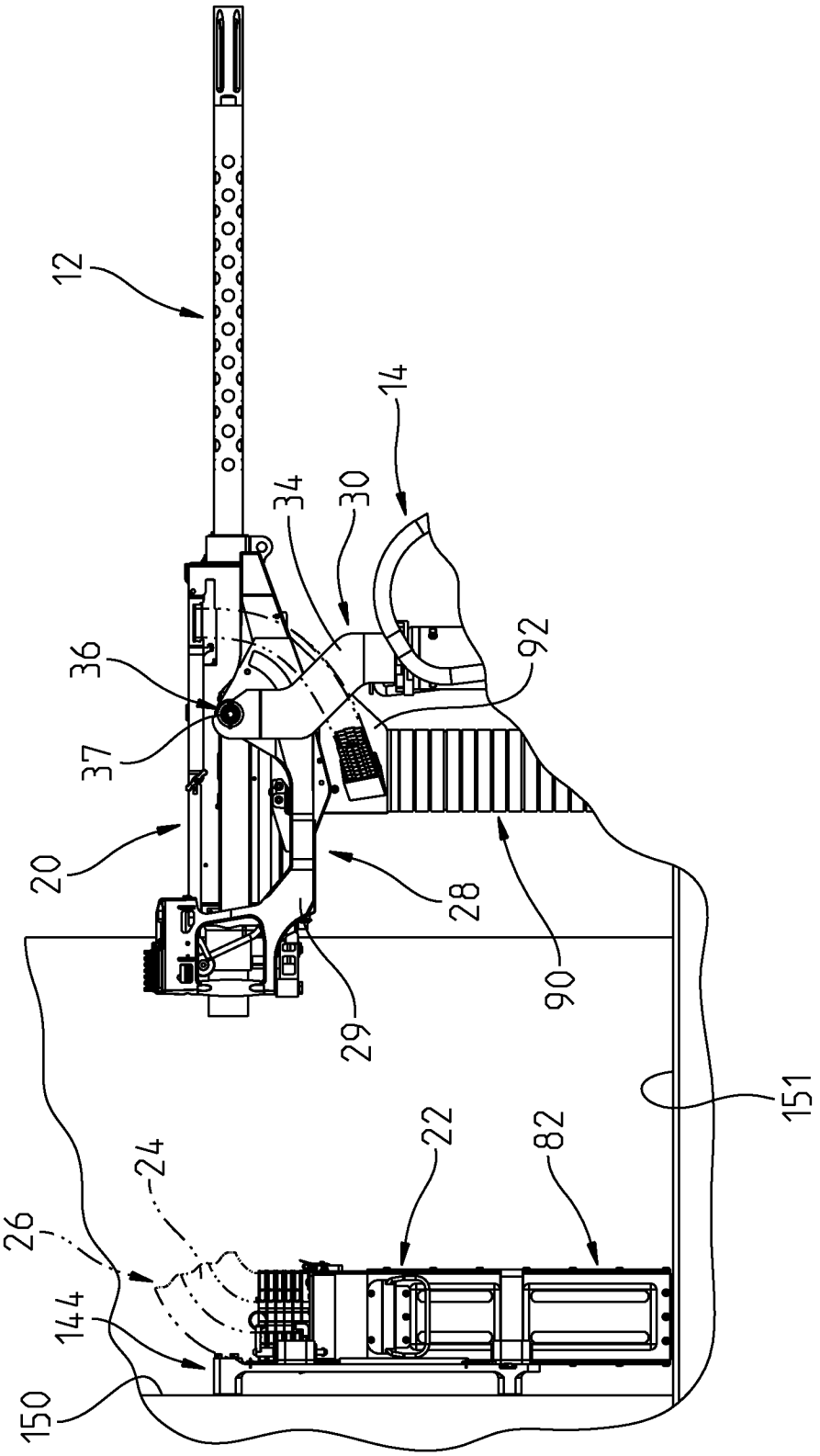

FIG. 4

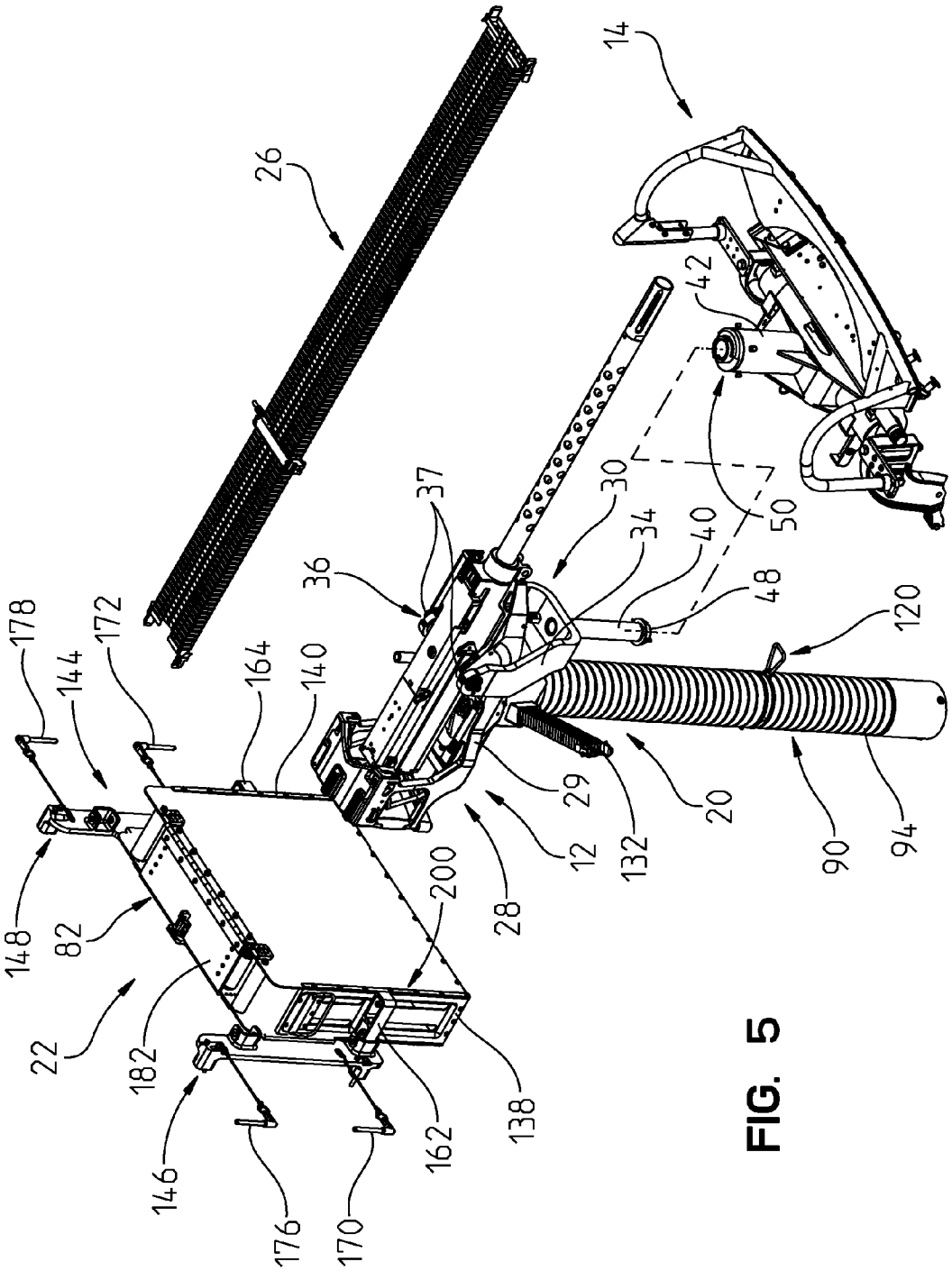
14
26
42
50
30
34
40
48
37
36
120
178
144
172
164
140
29
132
20
90
94
12
28
200
148
82
22
182
146
176
170
162
138

FIG. 5

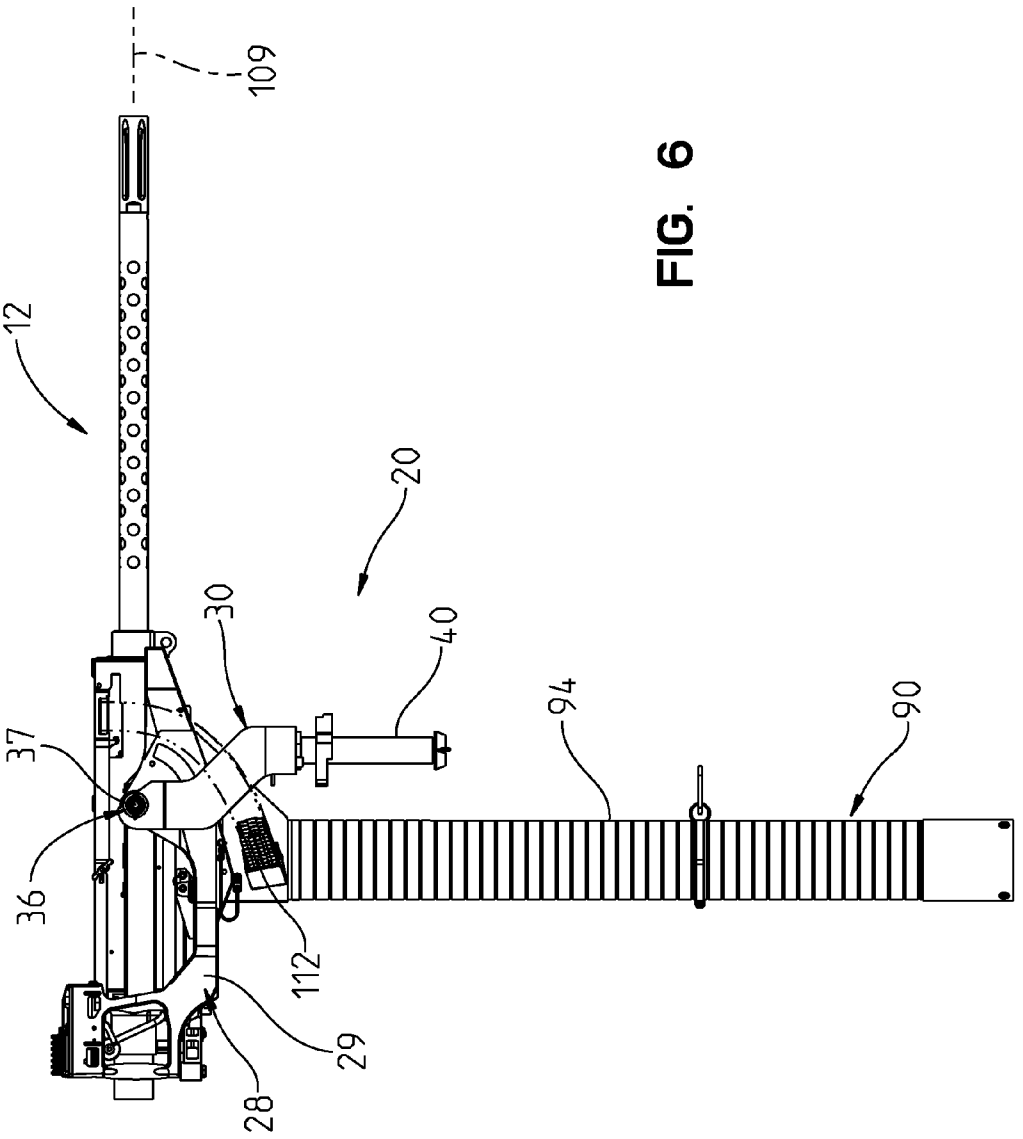

FIG. 6

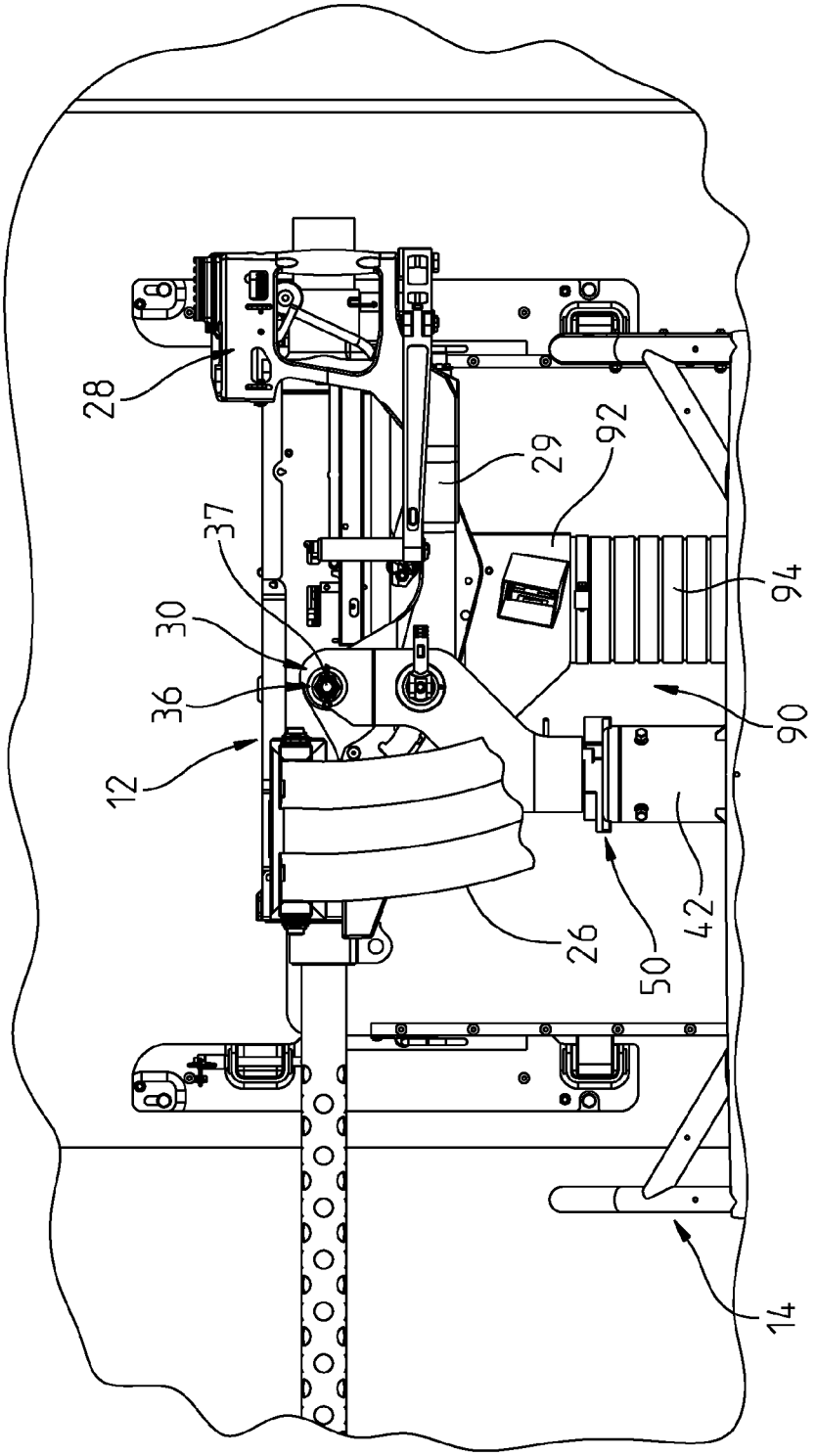

FIG. 7

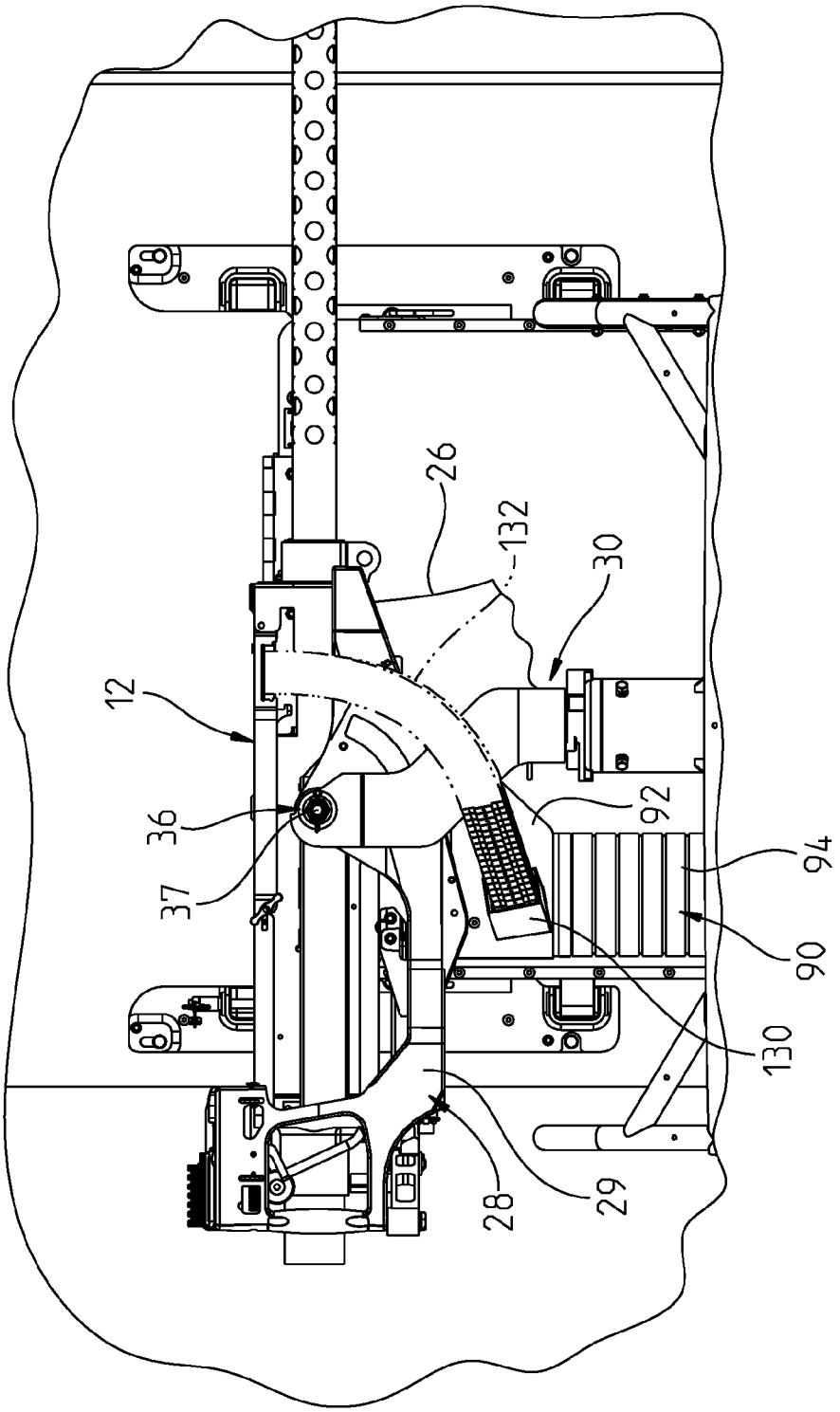

FIG. 8

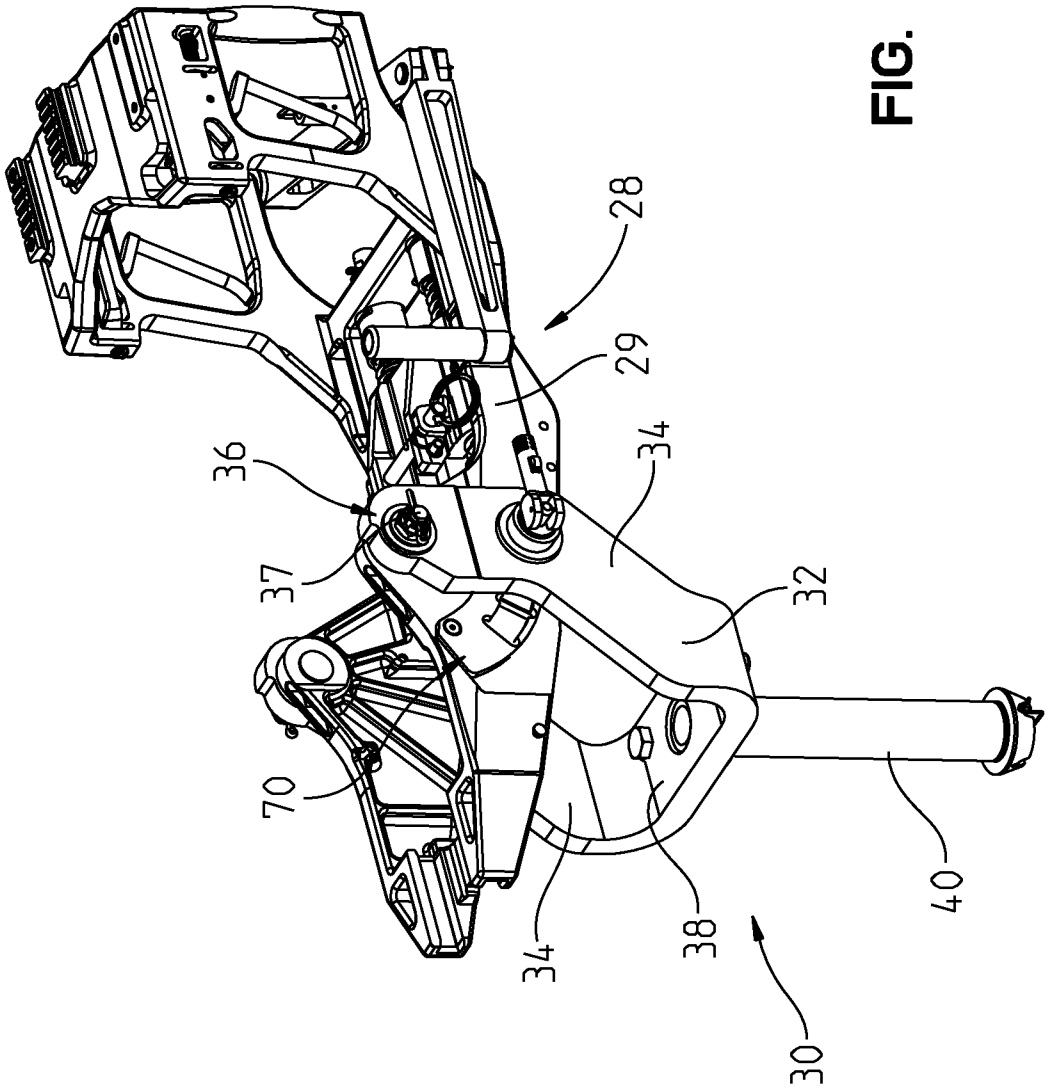

FIG. 9

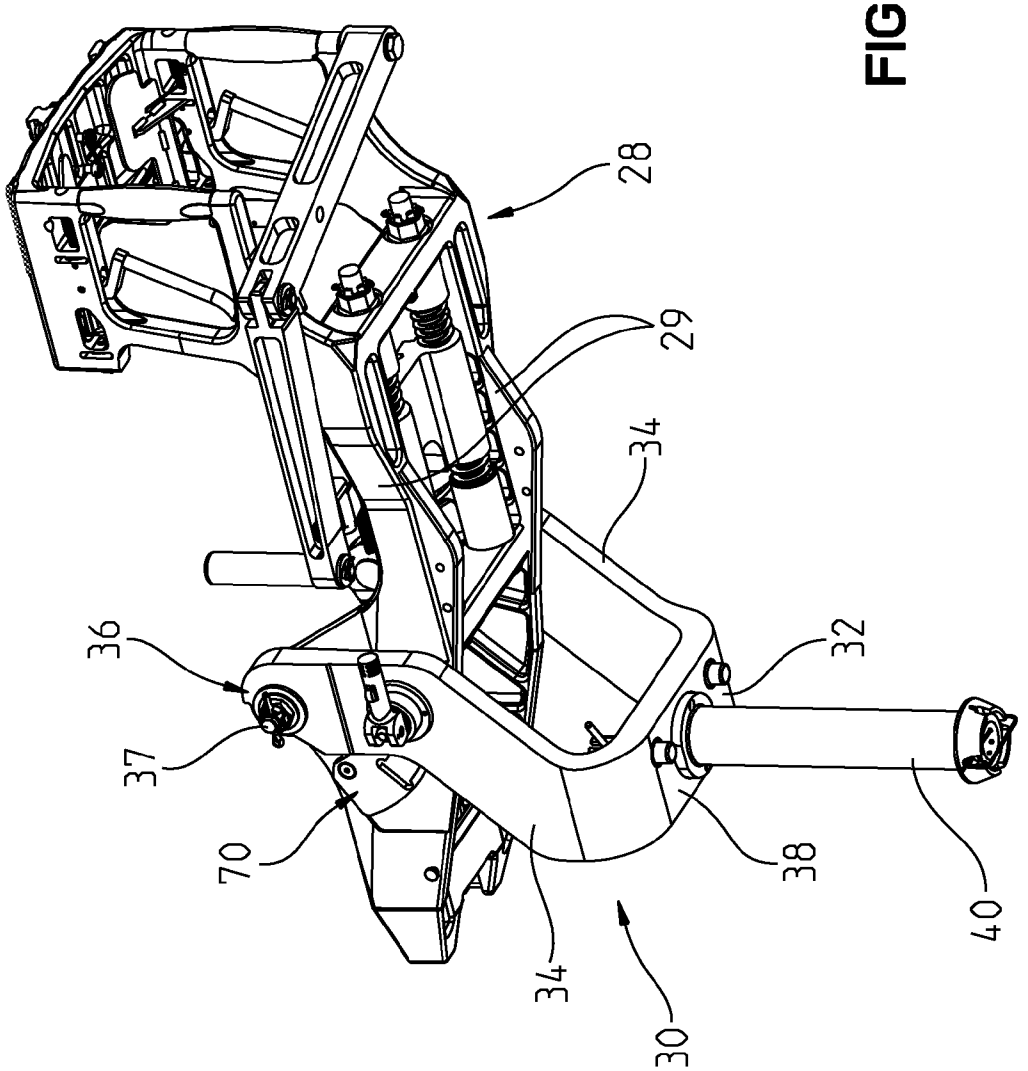

FIG. 10

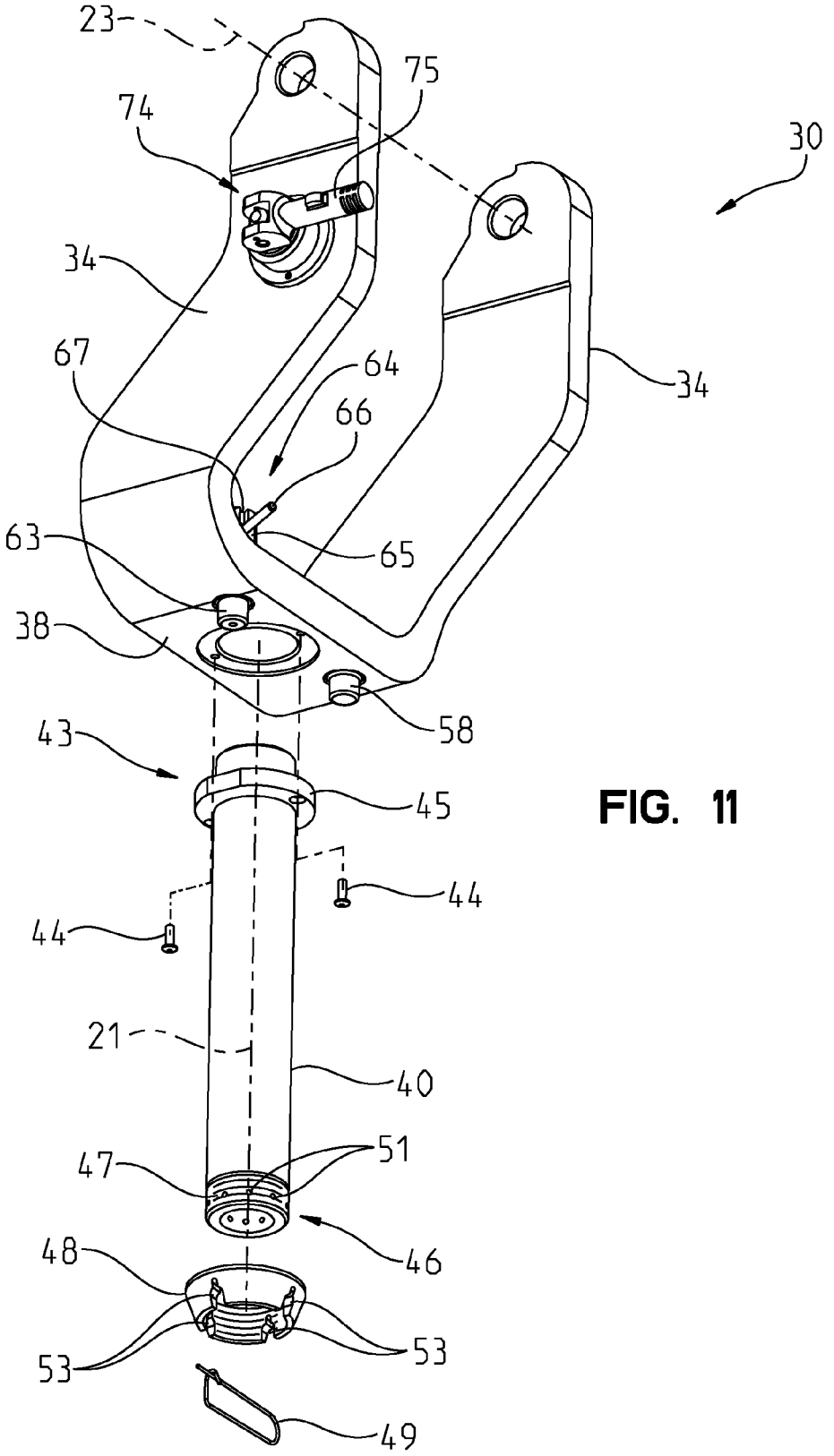
23
75
74
30
34
67
64
66
34
63
65
38
58
43
45
44
44
21
40
47
51
48
46
53
53
49

FIG. 11

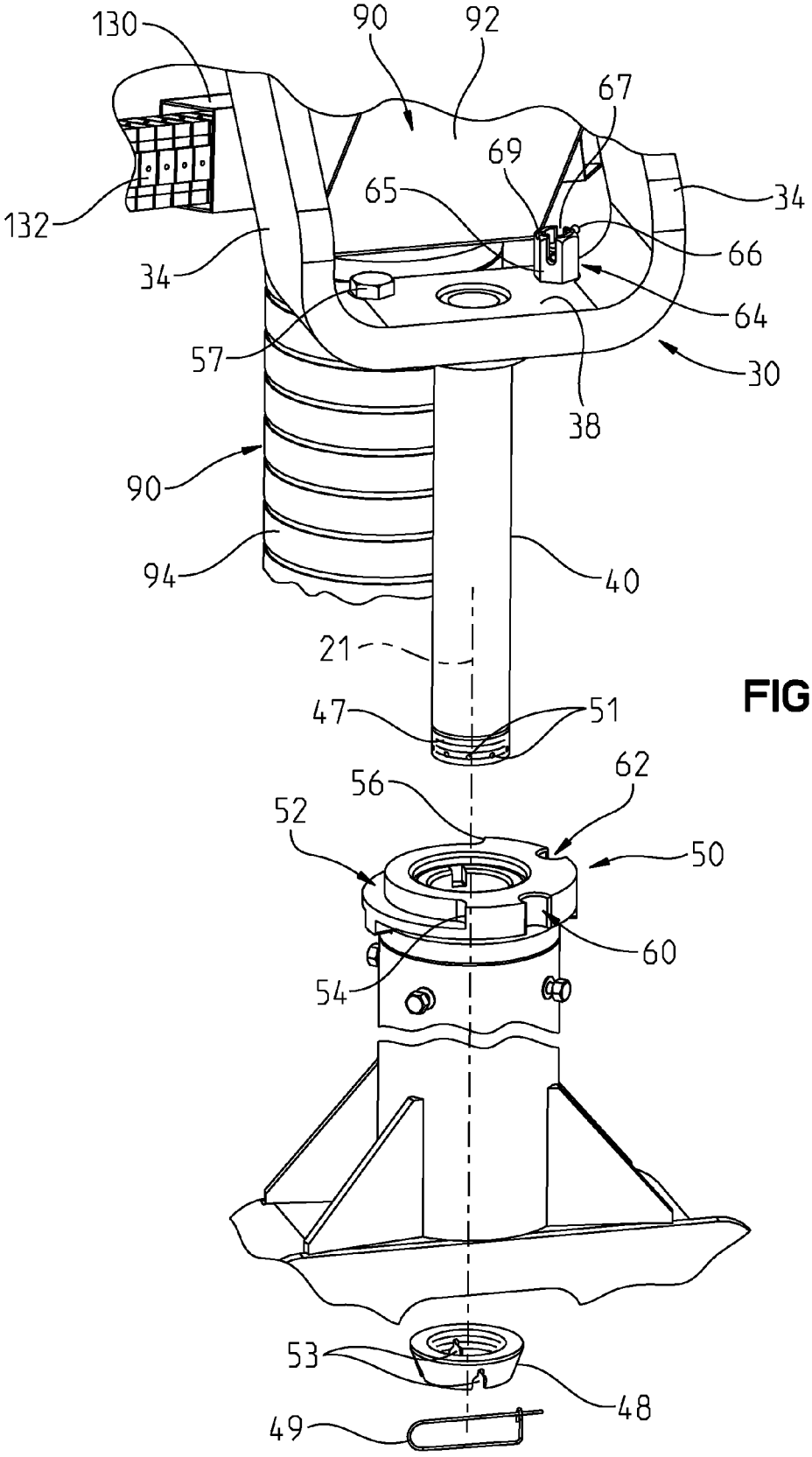
130
90
92
67
69
65
34
132
66
34
64
57
30
38
90
94
40
21
47
51
56
62
52
50
60
54
53
48
49

FIG. 12

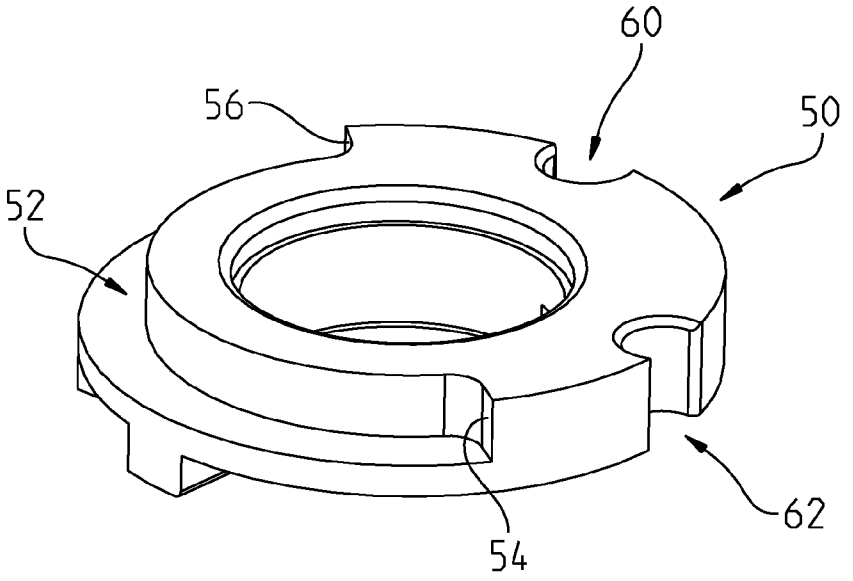

FIG. 13

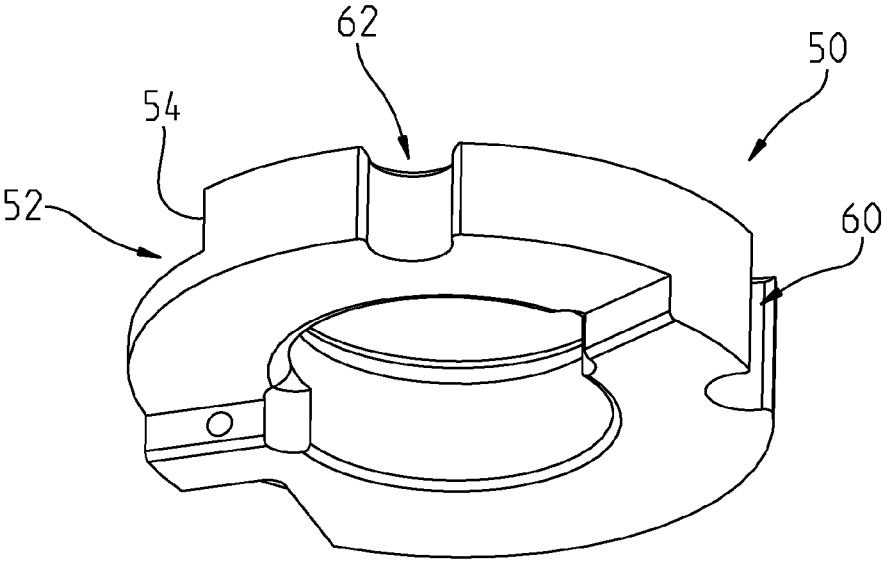

FIG. 14

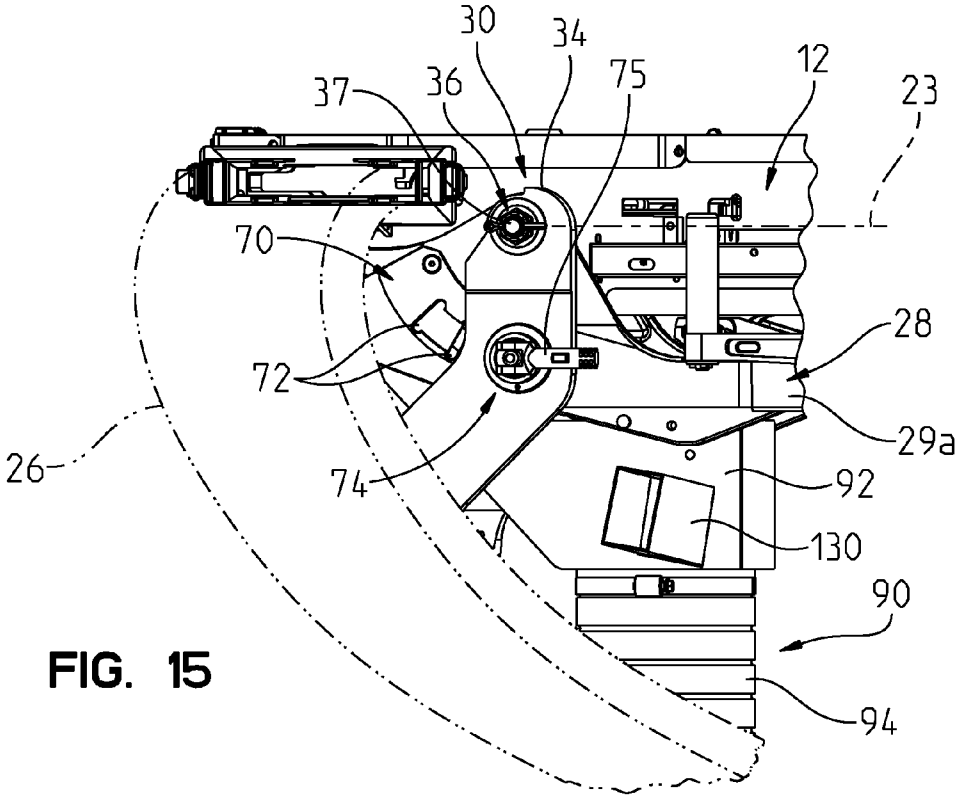
30
34
75
12
37
36
23
70
28
72
29a
26
74
92
130
90
94

FIG. 15

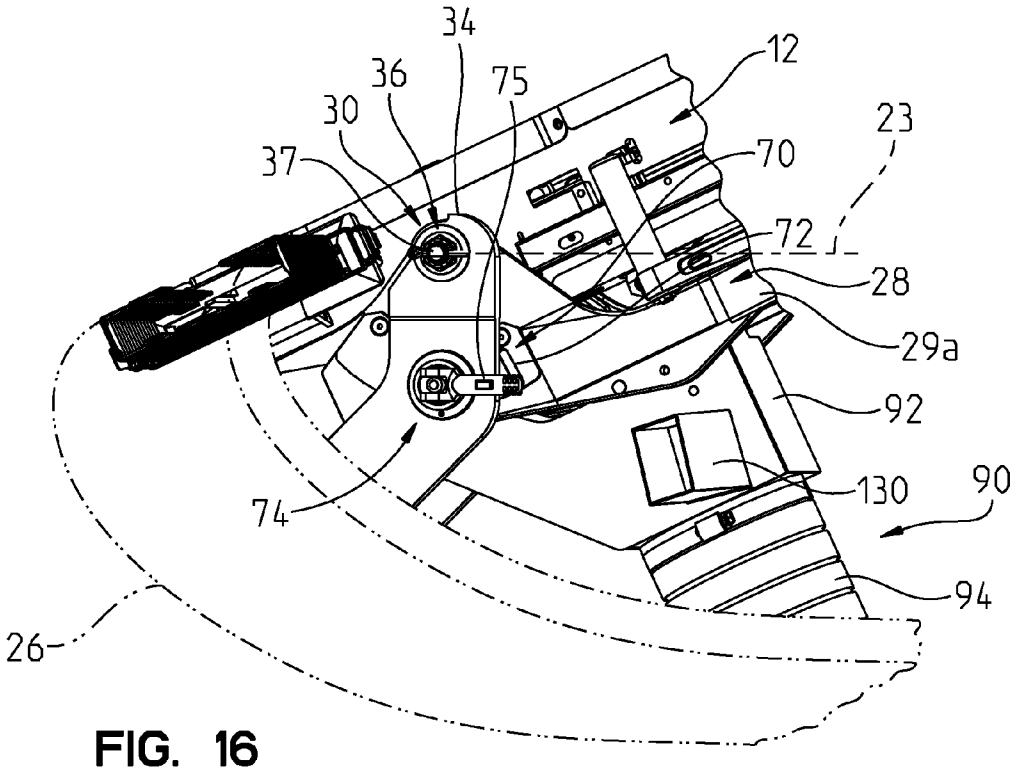
34
12
36
75
30
23
37
70
72
28
29a
92
74
130
90
94
26

FIG. 16

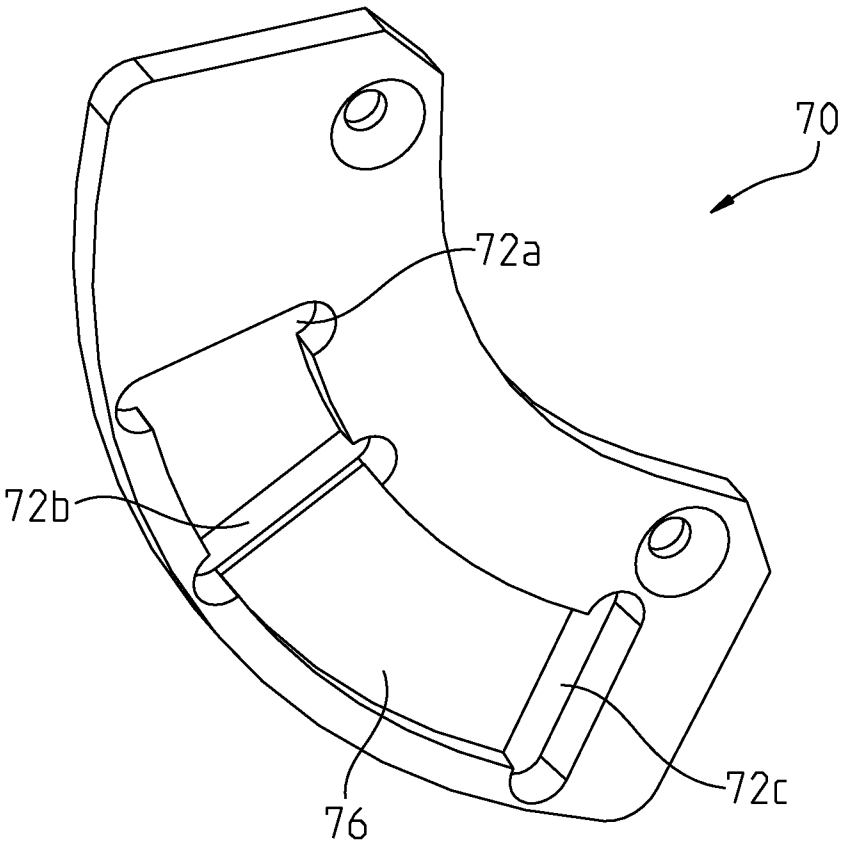

FIG. 17

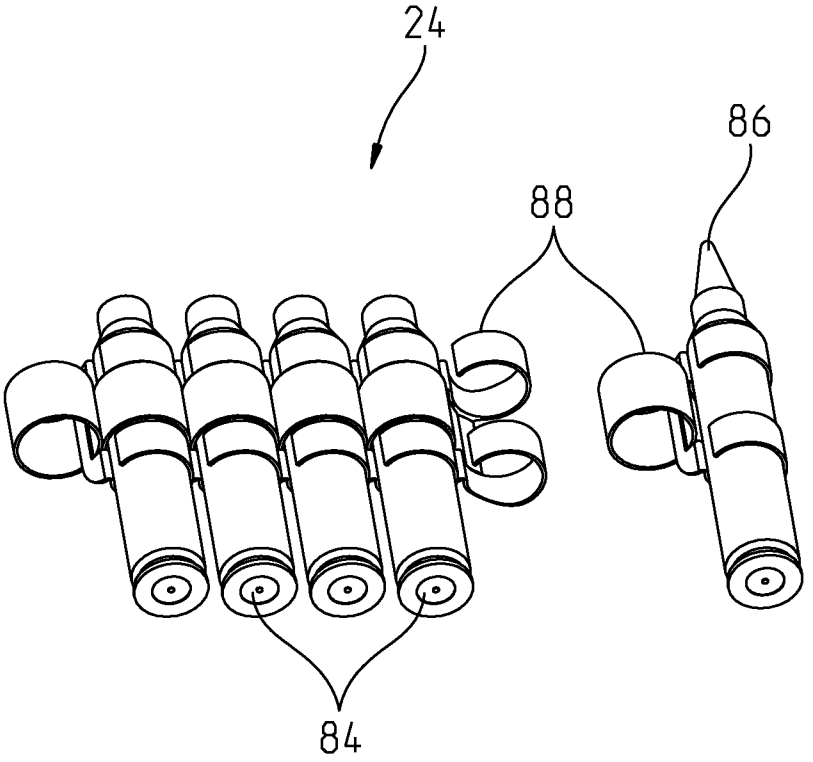

FIG. 18

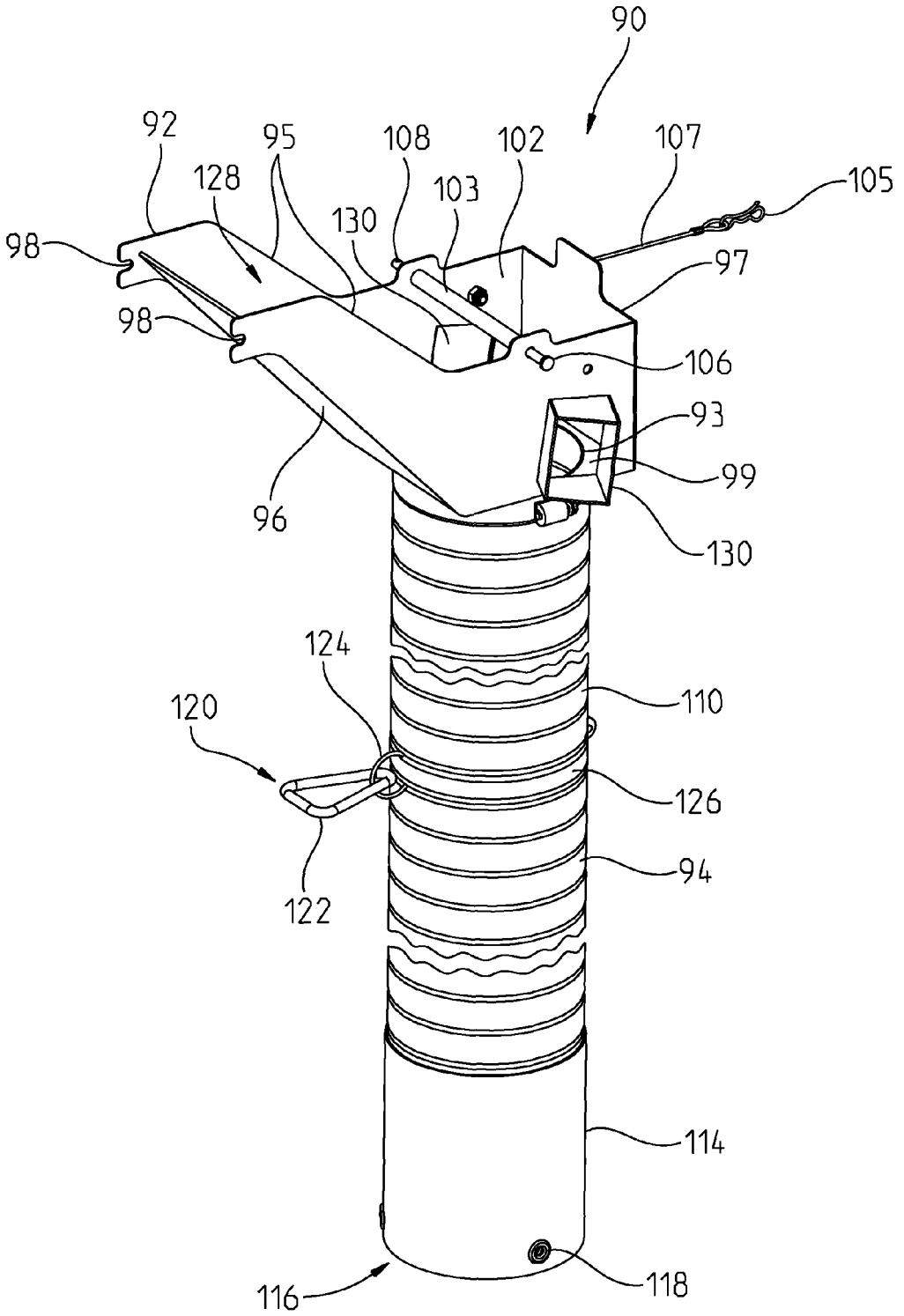
90
92
95
108
102
107
105
128
103
130
98
97
98
106
93
99
96
130
124
110
120
126
94
122
114
116
118

FIG. 19

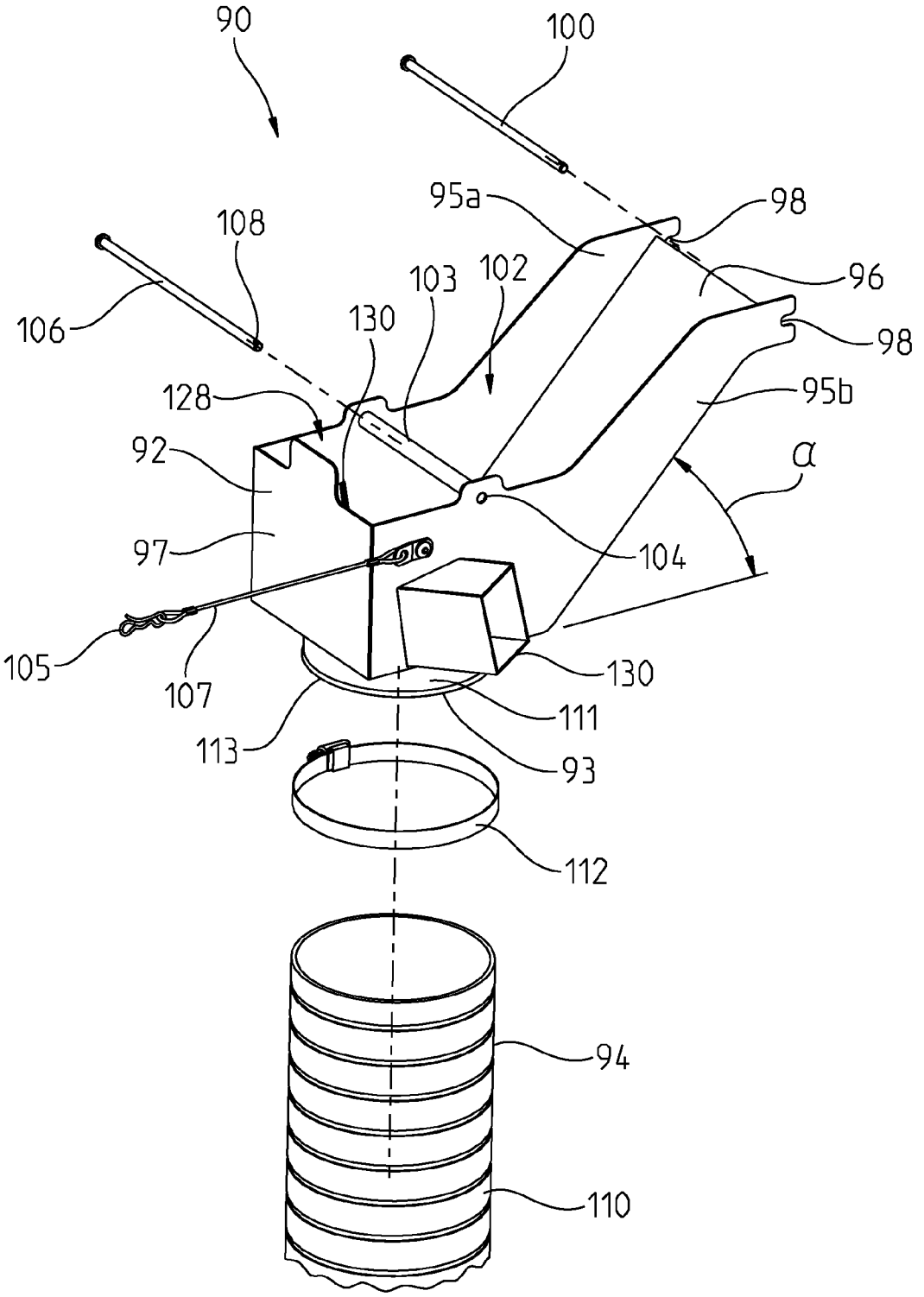
90
100
95a
98
108
96
103
102
106
130
98
128
95b
92
α
97
104
105
130
107
111
113
93
112
94
110

FIG. 20

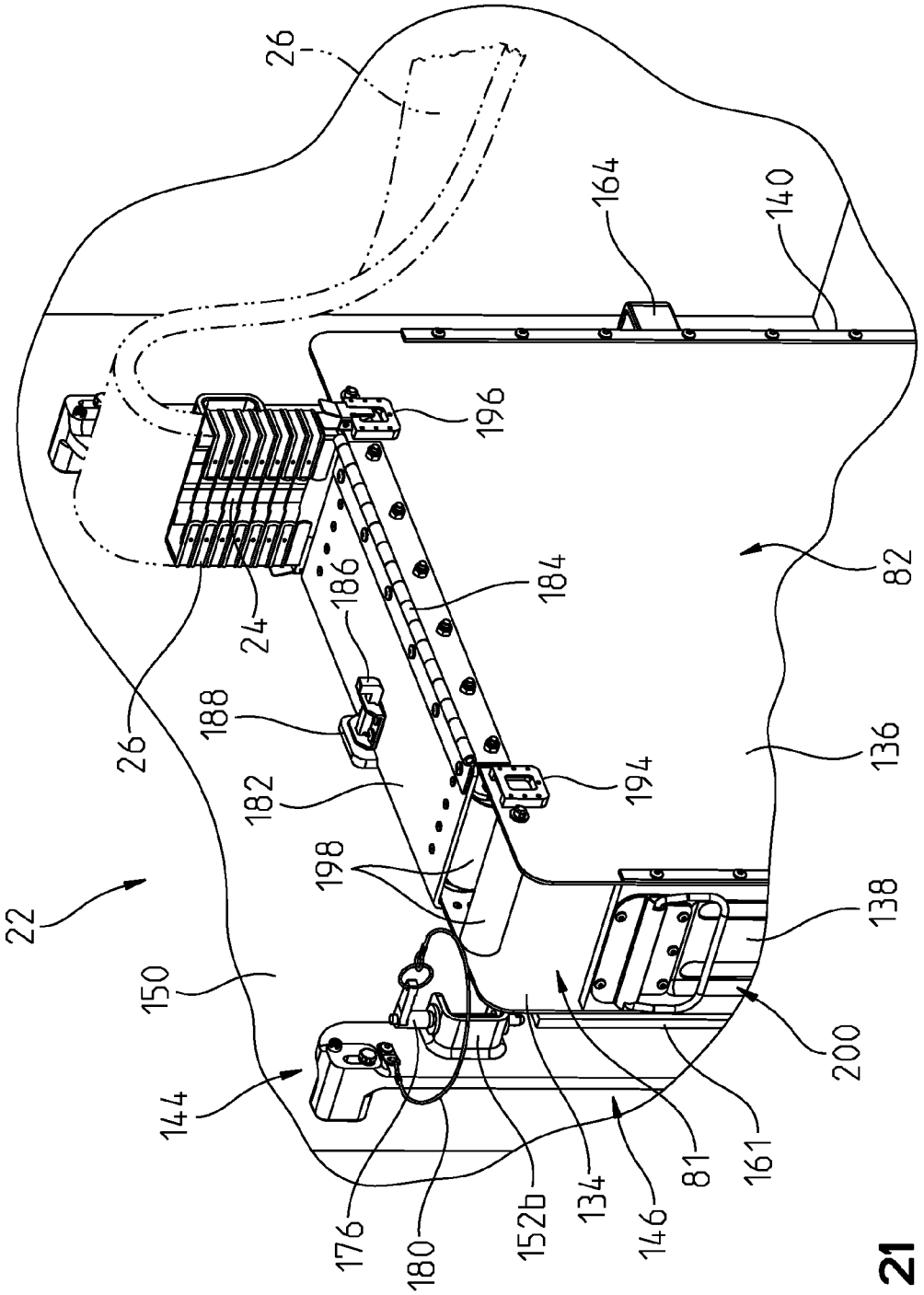
26
164
140
196
184
186
24
26
188
182
194
82
136
198
22
150
138
200
144
176
180
152b
134
146
81
161

FIG. 21

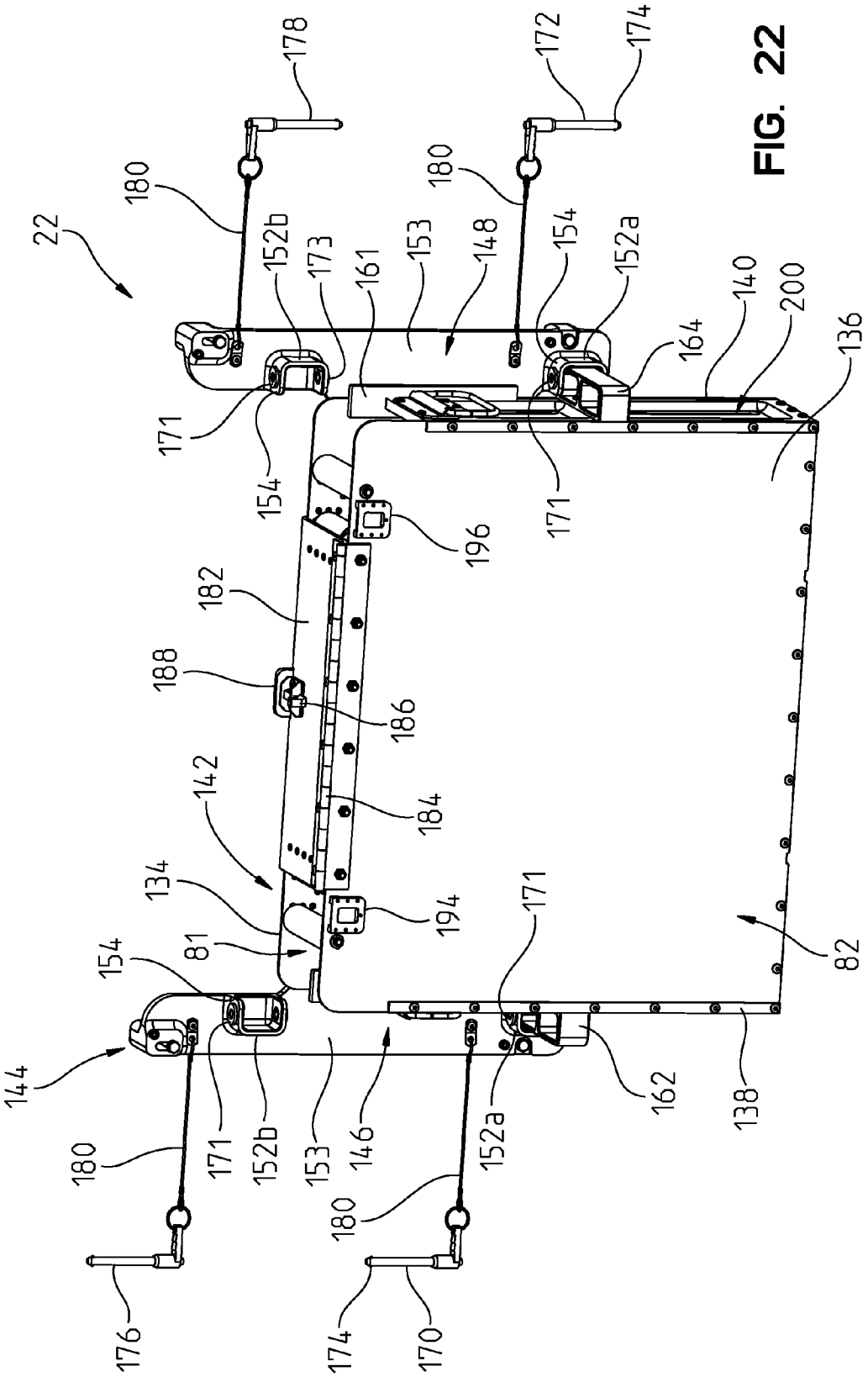
22
178
172
174
180
180
152b
173
161
153
148
154
152a
140
200
164
136
171
154
171
196
182
188
186
142
184
134
194
171
154
81
82
144
171
152b
153
146
152a
162
138
180
180
176
174
170

FIG. 22

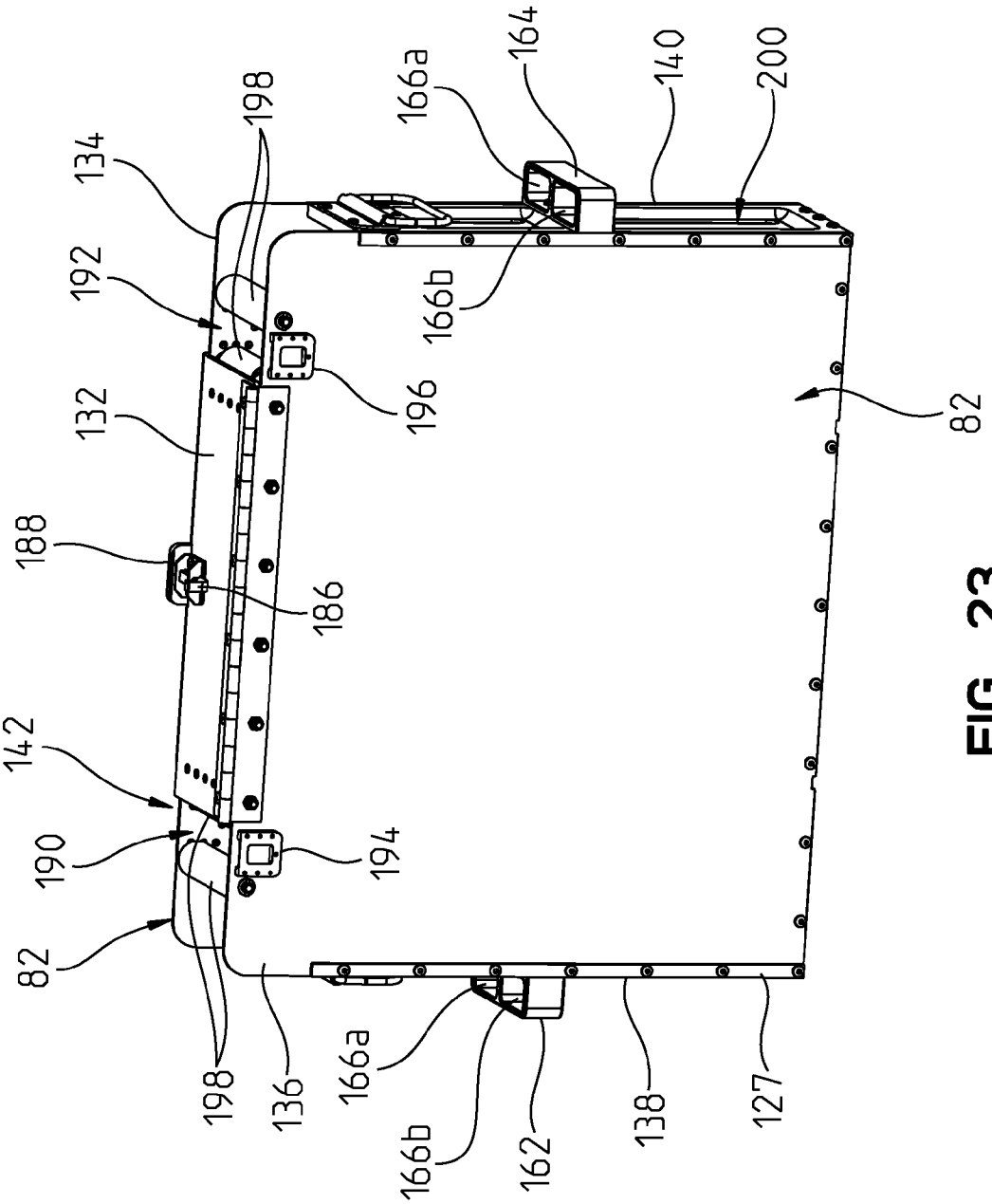
134
192
132
188
142
190
82
198
198
136
166a
166b
162
138
127
196
186
194
166b
166a
164
140
200
82

FIG. 23

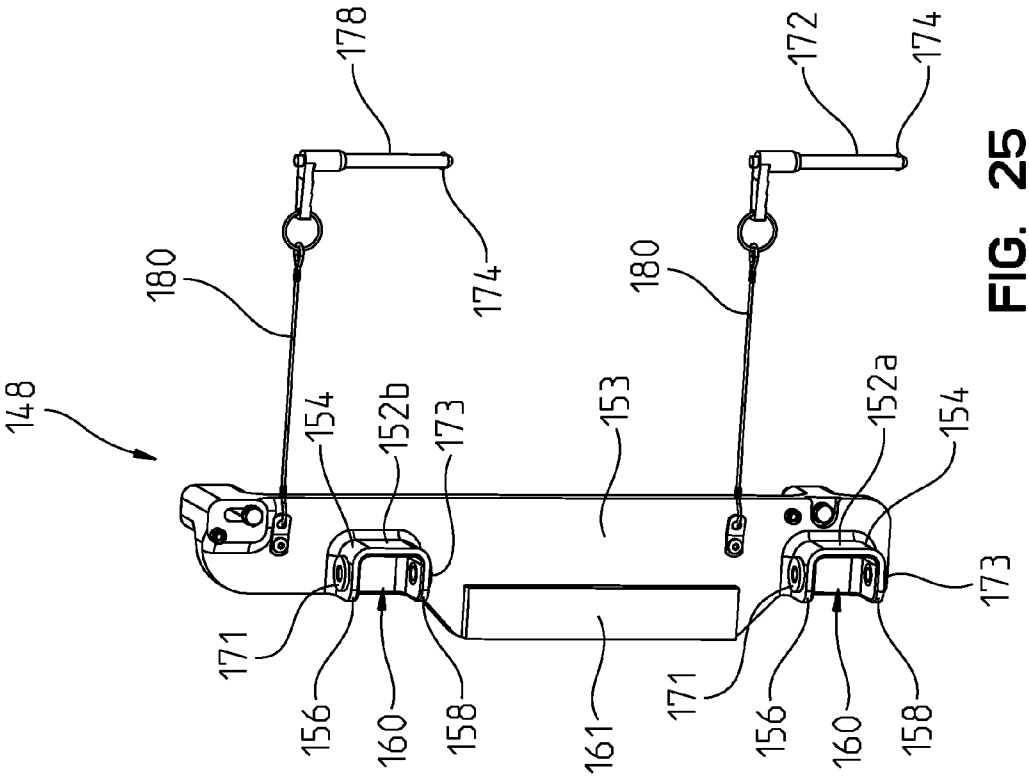
148
178
172
174
174
180
180
154
152b
173
153
152a
154
173
171
156
160
158
161
171
156
160
158

FIG. 25

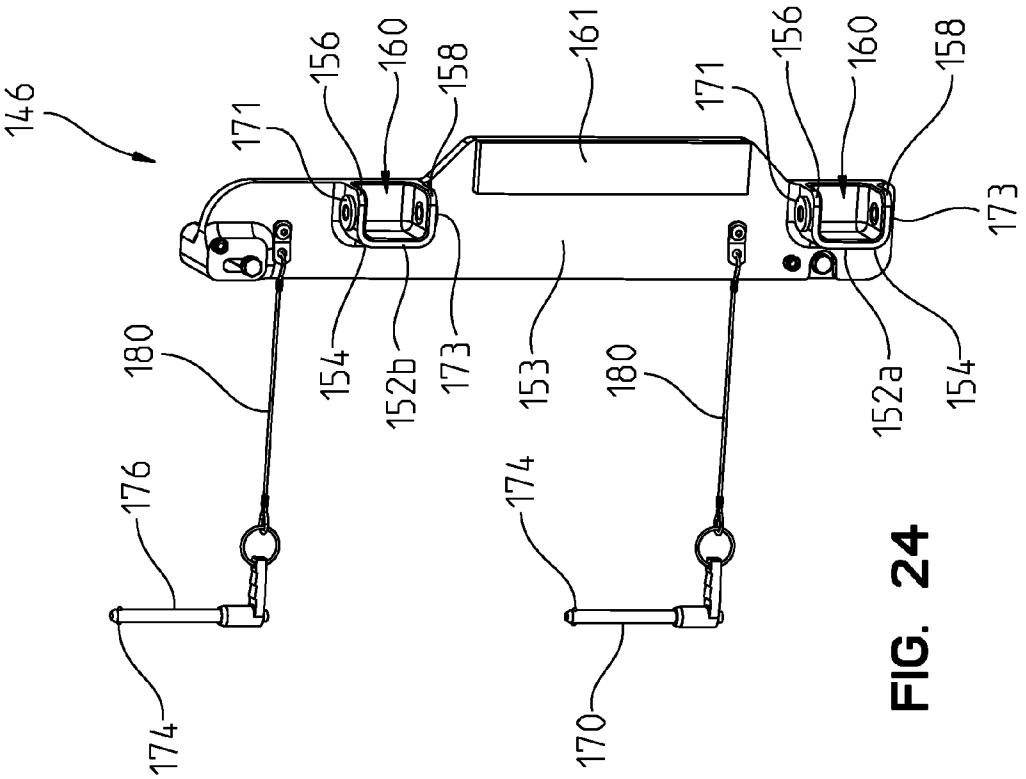
146
171
156
160
158
161
171
156
160
158
173
180
154
152b
173
153
180
152a
154
176
174
174
170

FIG. 24

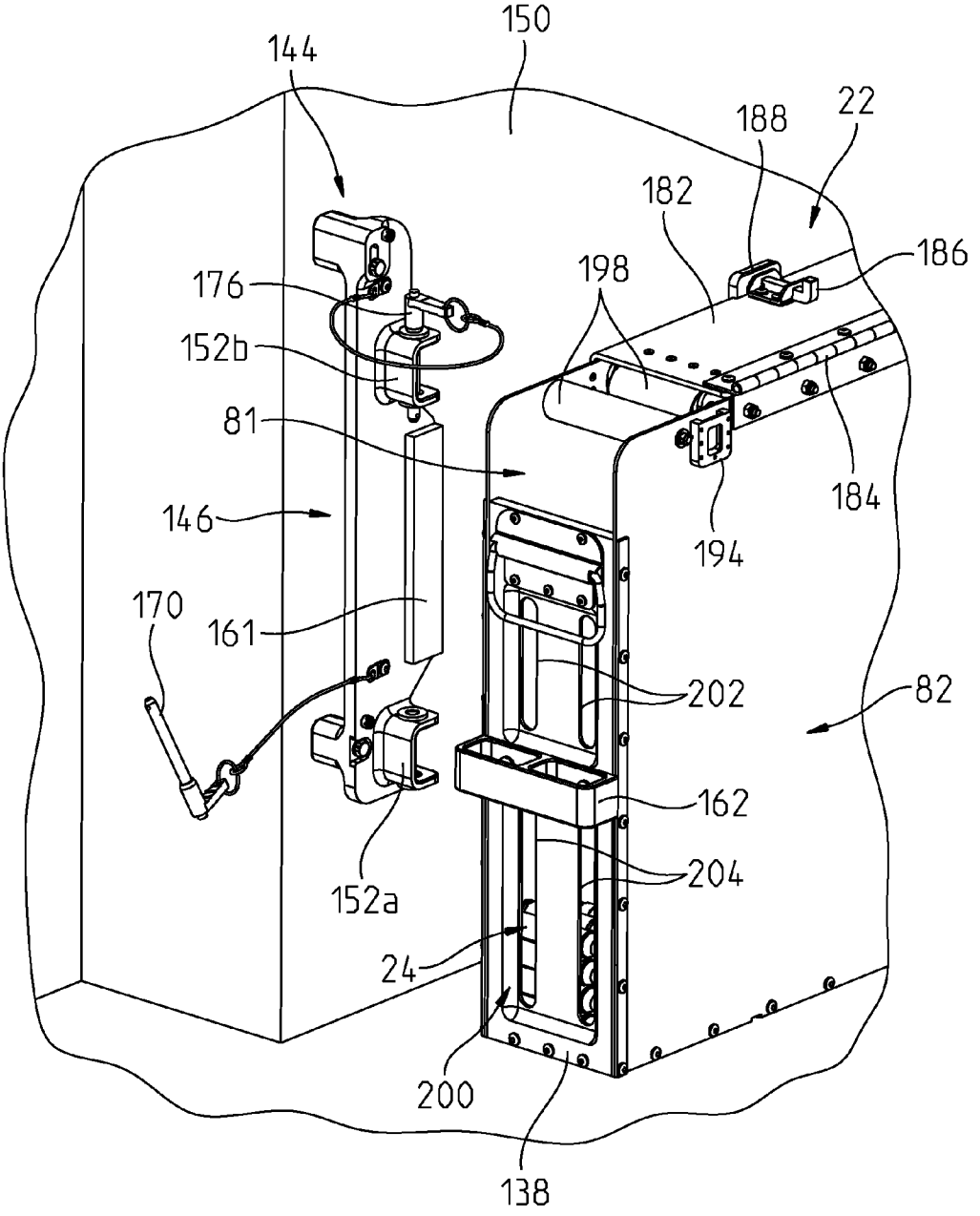
150
144
188
22
182
186
198
176
152b
81
184
146
194
170
161
202
82
162
204
152a
24
200
138

FIG. 26

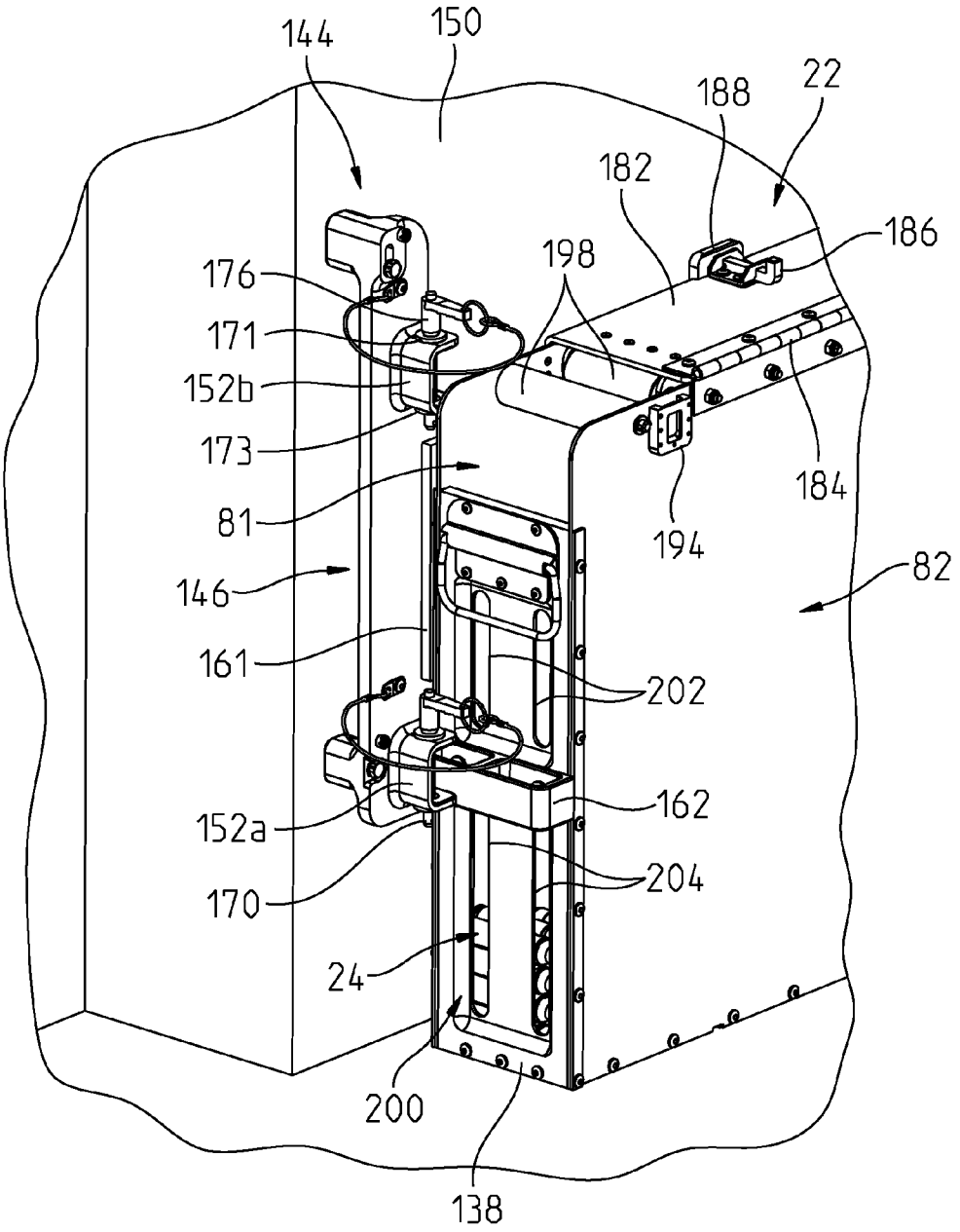
144
150
188
22
182
186
198
176
171
152b
173
81
146
161
184
194
82
202
162
152a
204
170
24
200
138

FIG. 27

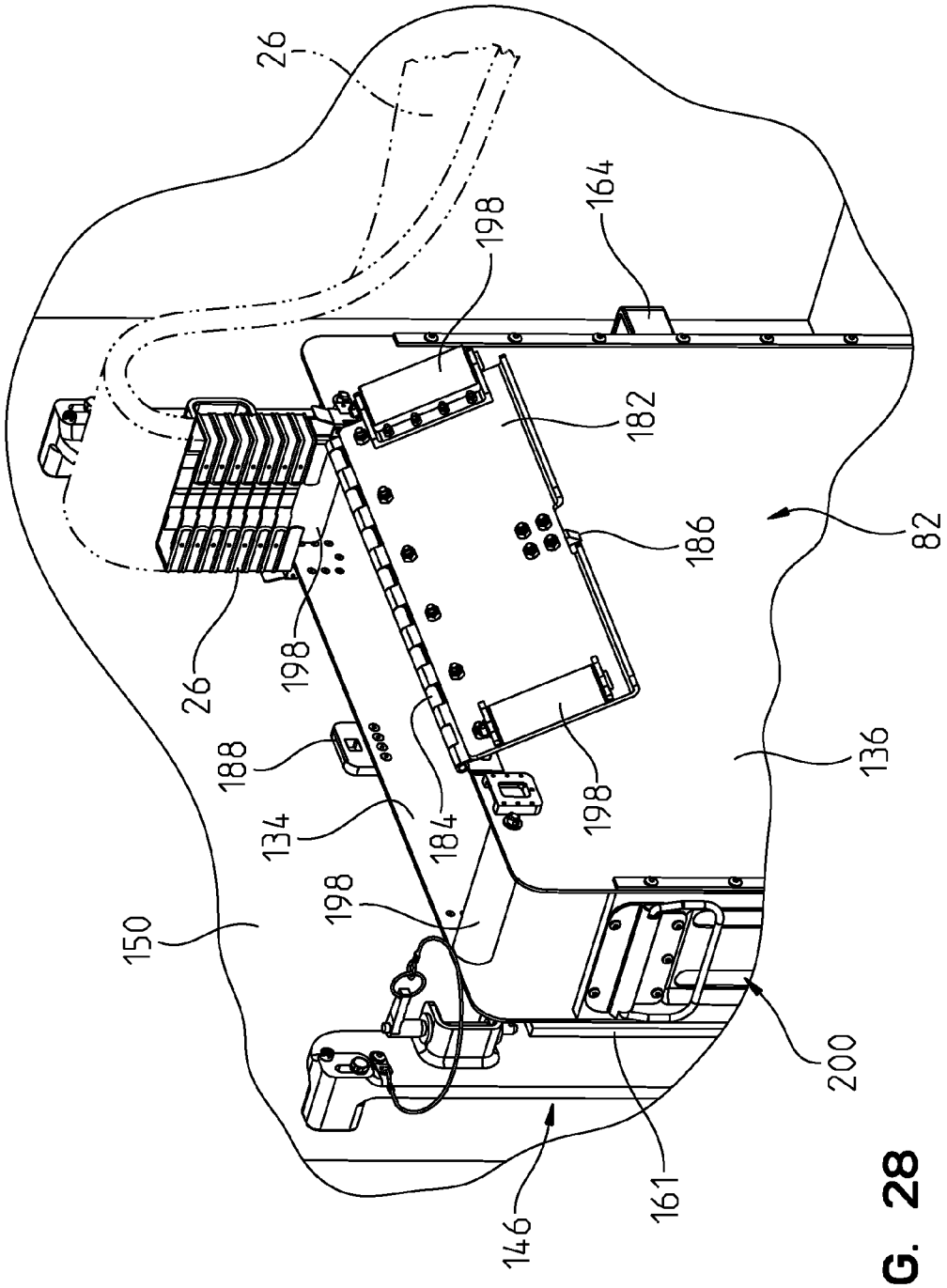
26
198
164
182
186
82
26
198
188
134
184
198
136
150
198
200
146
161

FIG. 28

AMMUNITION CANISTER AND FEED SYSTEM

CROSS-REFERENCE TO RELATED APPLICATION

This application is a divisional of U.S. patent application Ser. No. 12/571,396, filed Sep. 30, 2009 now U.S. Pat. No. 8,151,684, titled "AMMUNITION CANISTER AND FEED SYSTEM" which claims priority to U.S. Provisional Patent Application Ser. No. 61/179,615, filed May 19, 2009, the disclosure of which are expressly incorporated by reference herein.

STATEMENT REGARDING FEDERALLY SPONSORED RESEARCH OR DEVELOPMENT

The invention described herein includes contributions by one or more employees of the Department of the Navy made in performance of official duties and may be manufactured, used and licensed by or for the United States Government for any governmental purpose without payment of any royalties thereon.

BACKGROUND AND SUMMARY OF THE DISCLOSURE

The present disclosure relates to weapon systems and, more particularly, to helicopter armament systems.

It is known to provide weapon systems on aircraft, including helicopters. For example, 50 caliber machine guns have been mounted on helicopters using an external store support assemblies. However, there remains a need for a system to integrate updated weapons, including the GAU-21 50 caliber machine gun, onto helicopters, including the UH-1Y. Additionally, there is a need for an effective ammunition feed system, and casing and link ejection system.

According to an illustrative embodiment of the present disclosure, an ammunition feed assembly for a machine gun includes an ammunition canister including a first side wall, a second side wall extending parallel to and in spaced relation to the first side wall, a first end wall extending between the first side wall and the second side wall, and a second end wall extending between the first side wall and the second side wall in spaced relation to the first end wall, the first side wall configured to be positioned adjacent to and in substantially parallel disposition with a vertical mounting surface. A storage compartment for storing an ammunition belt in a serpentine path is defined by the first side wall, the second side wall, the first end wall, and the second end wall. A first end bracket is secured to the first end wall of the canister, and a second end bracket is secured to the second end wall of the canister. A first end receiver is configured to be secured to the vertical mounting surface and to receive the first end bracket, and a second end receiver is configured to be secured to the vertical mounting surface and to receive the second end bracket. A first pin is configured to be slidably received by the first end bracket and the first end receiver for releasably coupling the first end bracket to the first end receiver. A second pin is configured to be slidably received by the second end bracket and the second end receiver for releasably coupling the second end bracket to the second end receiver.

According to a further illustrative embodiment of the present disclosure, a method of feeding ammunition to a machine gun includes the steps of providing an ammunition belt within a storage compartment of an ammunition canister, coupling the ammunition canister to a vertical mounting surface of a helicopter, supplying the ammunition belt through a feed chute to a machine gun, and viewing through a sight formed within a wall of the ammunition canister the amount of ammunition belt remaining within the storage compartment.

BRIEF DESCRIPTION OF THE DRAWINGS

The foregoing aspects and many of the attendant advantages of this invention will become more readily appreciated as the same become better understood by reference to the following detailed description when taken in conjunction with the accompanying drawings.

FIG. **1** is a front view in partial schematic of an illustrative helicopter including a prior art external stores support assembly;

FIG. **2** is a rear side perspective view of an aircraft armament system of the present disclosure;

FIG. **3** is a front side perspective view of the aircraft armament system of FIG. **2**;

FIG. **4** is a side perspective view of the aircraft armament system of FIG. **2**;

FIG. **5** is a partially exploded perspective view of an aircraft armament system of the present disclosure, showing the external stores support assembly;

FIG. **6** is a side elevational view of the gun mount assembly of FIG. **2**;

FIG. **7** is a side elevational view showing the carriage oriented in a rearward position;

FIG. **8** is a side elevational view similar to FIG. **7**, showing the carriage oriented in a forward position;

FIG. **9** is a top perspective view of the carriage and the cradle of the gun mount assembly of FIG. **6**;

FIG. **10** is a bottom perspective view of the carriage and the cradle of the gun mount assembly of FIG. **9**;

FIG. **11** is a partially exploded perspective view of the carriage of the gun mount assembly of FIG. **9**;

FIG. **12** is a partially exploded perspective view showing interaction between the carriage and the azimuth stop body;

FIG. **13** is a top perspective view of the azimuth stop body of the cradle of the gun mount assembly of FIG. **12**;

FIG. **14** is a bottom perspective view of the azimuth stop body of FIG. **13**;

FIG. **15** is a side perspective view showing the elevation stop body and carriage in a first position;

FIG. **16** is a side perspective view similar to FIG. **15**, showing the elevation stop body and carriage in a second position;

FIG. **17** is a perspective view of the elevation stop body of the gun mount assembly of FIG. **9**;

FIG. **18** is a perspective view of representative ammunition belt including casings and links;

FIG. **19** is a perspective view of the ejection chute assembly of FIG. **5**;

FIG. **20** is an exploded perspective view of the ejection chute assembly of FIG. **19**;

FIG. **21** is a perspective view of the ammunition canister and the feed chute for feeding the ammunition belt from an ammunition canister to the machine gun of FIG. **2**;

FIG. **22** is a partially exploded perspective view of the ammunition canister and mounting assembly of the aircraft armament system of FIG. **5**;

FIG. **23** is a perspective view of the ammunition canister of FIG. **22**;

FIG. **24** is a perspective view of the right hand receiver of the mounting assembly of FIG. **22**;

FIG. **25** is a perspective view of the left hand receiver of the mounting assembly of FIG. **22**;

FIG. **26** is a left side perspective view of the ammunition canister and mounting assembly of FIG. **22**, with the canister uncoupled from the receiver;

FIG. **27** is a left side perspective view similar to FIG. **26**, showing the canister coupled to the receiver; and

FIG. **28** is a top perspective view of the ammunition canister of FIG. **22**, showing the hinged lid in an open position.

Corresponding reference characters indicate corresponding parts throughout the several views. Although the drawings represent embodiments of various features and components according to the present disclosure, the drawings are not necessarily to scale and certain features may be exaggerated in order to better illustrate and explain the present disclosure. The exemplification set out herein illustrates embodiments of the invention, and such exemplifications are not to be construed as limiting the scope of the invention in any manner.

DETAILED DESCRIPTION OF THE DRAWINGS

For the purposes of promoting an understanding of the principles of the invention, reference will now be made to the embodiments illustrated in the drawings, which are described below. The embodiments disclosed below are not intended to be exhaustive or limit the invention to the precise form disclosed in the following detailed description. Rather, the embodiments are chosen and described so that others skilled in the art may utilize their teachings. It will be understood that no limitation of the scope of the invention is thereby intended. The invention includes any alterations and further modifications in the illustrated devices and described methods and further applications of the principles of the invention which would normally occur to one skilled in the art to which the invention relates.

Referring initially to FIGS. **1-3**, a machine gun helicopter armament system **10** of the present disclosure supports a weapon **12** and is configured to be mounted to an external stores support assembly **14**. The support assembly **14** may be coupled to an enclosure **13** of aircraft **16** in a known manner. Illustratively, the aircraft **16** comprises a UH-1Y helicopter including left and right support assemblies **14***a* and **14***b* mounted to the left and right sides of the helicopter **16**. The enclosure **13** may be a crew compartment and illustratively includes a vertical mounting surface **150** and a horizontal floor **151**. The helicopter **16** may also include additional weapons, such as rockets **18***a* and **18***b*, supported by and/or adjacent to the respective support assemblies **14***a* and **14***b*. More particularly, the support assemblies **14** may each include a pair of spaced apart downwardly extending arms **15** supporting a cross member **17** which, in turn, supports rockets **18**. A pair of sway members **19**, illustratively adjustable turn buckles, extend at an angle between the arms **15** and the cross member **17**.

In the illustrative embodiment, the weapon **12** comprises a 50 caliber machine gun, such as a GAU-21 machine gun manufactured by FNH USA of McLean, Va. While a UH-1Y helicopter and a GAU-21 machine gun are used for illustrative purposes, it should be appreciated that other aircraft and weapons may utilize the armament system **10** of the present disclosure.

With reference to FIGS. **2** and **3**, the armament system **10** illustratively includes a gun mount assembly **20** configured to support the machine gun **12** for azimuth movement (about a longitudinal (e.g. vertical) axis **21**) and elevational movement (about a transverse (e.g. horizontal) axis **23**). An ammunition canister and mounting assembly **22** is supported within the interior of the helicopter **16** and is configured to supply an ammunition belt **24** (FIG. **18**) to the machine gun **12** through a feed chute **26**. The feed chute **26** couples to the firing chamber of the machine gun **12** in a conventional manner. The feed chute **26** is illustratively formed of interconnected stainless steel segments to provide flexibility and may be manufactured by Standard Armament of Glendale, Calif.

With reference to FIGS. **4-10**, the gun mount assembly **20** illustratively includes a cradle **28** operably coupled to a carriage **30**. The machine gun **12** is coupled to the cradle **28** in a conventional manner. The cradle **28** includes a pair of laterally spaced apart side members **29** which are supported by the carriage **30**. More particularly, the carriage **30** illustratively includes a U-shaped body or yoke **32** having laterally spaced apart uprights **34** receiving the cradle **28**. The side members **29** of the cradle **28** are supported by a pivot coupling **36**, illustratively defined by opposing studs **37** supported by uprights **34**, for vertical pivoting movement (i.e., elevational or about axis **23**) relative to the carriage **30**. A base **38** connects the uprights **34** of the carriage **30** and is rotatably supported by a pintle **40**. The pintle **40** extends downwardly through a hollow support shaft or mounting tube **42** of the external stores support assembly **14**.

Referring now to FIG. **11**, a first or upper end **43** of the pintle **40** is secured to the base **38** of the carriage **30** through fasteners **44**, such as screws extending through a collar **45**. A second or lower end **46** of the pintle **40** includes a nut **48** secured thereto and configured to secure the carriage **30** to the support assembly **14**. More particularly, the nut **48** is threadably received on a threaded lower portion **47** of the pintle **40**. A safety pin **49** prevents unintended loosening of the nut **48** by being received within slots **51** of nut **48** and passing through diametrically opposed openings **53** of pintle **40**.

With reference to FIGS. **11-14**, the pintle **40** permits rotational movement about axis **21** (i.e., azimuth) of the carriage **30**. A pintle adapter or azimuth stop body **50** is supported by the mounting tube **42** and includes an arcuate raceway **52** extending between stops **54** and **56**. A stud **57** including a pin **58** extends downwardly from the base **38** of the carriage **30** and is configured to ride within the raceway **52** as the carriage **30** is rotated about the longitudinal axis. The stops **54** and **56** define the rotational limits of travel for the carriage **30** about axis **21**.

A pair of notches **60** and **62** are formed in the peripheral edge of the stop body **50** and are configured to alternately cooperate with a spring biased stow pin assembly **64** extending downwardly from the base **38** of the carriage **30**. The stow pin assembly **64** illustratively includes a pin **63** slidably received within a receiver **65** and spring biased downwardly in a down position (FIG. **11**). A handle **66** is coupled to an upper end of the pin **63** to permit a user to raise and lower the pin **63**. The handle **66** is received within a first slot **67** when in a lowered position, and is received within a second slot **69** when in a raised position. When the pin **63** is lowered and received within notch **60** of the stop body **50**, the carriage **30** supports the machine gun **12** in a position substantially perpendicular to the helicopter **16** (FIG. **2**). When the pin **63** is lowered and received within notch **62** of the stop body **50**, the carriage **30** supports the machine gun **12** in a stowed position substantially parallel to the helicopter **16** (FIG. **8**).

With reference to FIGS. **15-17**, a cradle elevation stop member **70** is secured to side member **29***a* of the cradle **28** and is configured to provide discrete set points, as defined by depressions or recesses **72***a*, **72***b*, **72***c* for the elevation of the machine gun **12**. As shown in FIGS. **15** and **16**, a spring biased toggle pin **74** may be set and released, through operation of a lever handle **75**, in position within one of the recesses **72***a*,

72*b*, 72*c* to provide a desired set point for the angular orientation of the cradle **28** and hence the machine gun **12** about transverse axis **23**. In the illustrative embodiment, the recesses 72*a*, 72*b*, 72*c* are circumferentially spaced apart along an arcuate pathway **76**.

The ammunition canister and mounting assembly **22** is operably coupled to the machine gun **12** and includes an ammunition receptacle or canister **82** configured to receive a predetermined number of rounds of ammunition. In one illustrative embodiment, the canister **82** is configured to receive 600 rounds of ammunition forming ammunition belt **24**. The ammunition belt **24** is stored in a serpentine pattern within a storage compartment **81** of the canister **82** to facilitate feeding to the machine gun **12** through the feed chute **26**. The ammunition belt **24** may be of conventional design as including a plurality of rounds including a casing **84** receiving a bullet **86**, and a plurality of links **88** interconnecting adjacent casings **84** (FIG. **18**). The casings **84** and links **88** are typically made of metal, such as brass.

As is known, when bullets **86** are fired from the machine gun **12**, the spent casings **84** and associated links **88** are ejected at elevated temperatures. More particularly, spent casings **84** generally fall from the bottom of the machine gun **12** while links **88** are generally ejected from the side of the machine gun **12** opposite the feed chute **26**. An ejection chute assembly **90** is provided to collect and distribute casings **84** and links **88** exiting from the machine gun **12** in order to reduce the likelihood of the casings **84** and links **88** from falling onto helicopter external stores, such as rockets **18**, or within the operator compartment of the helicopter **16**. More particularly, hot casings **84** and links **88** coming into contact with other stores on the helicopter **16** may adversely affect their operation and/or present safety concerns.

With reference to FIGS. **2-4**, **19** and **20**, the ejection chute assembly **90** includes a hopper **92** including an outlet opening **93** (FIG. **19**) coupled to a downwardly extending ejection tube **94**. The hopper **92** is illustratively formed of a durable metal, such as stainless steel or aluminum, and is received intermediate the uprights **34** of the carriage **30** and is coupled to the cradle **28**. Referring further to FIGS. **19** and **20**, the front end of the hopper **92** includes an inclined deflector **96** extending between first and second side walls **95***a* and **95***b*, while an end wall **97** extends between the side walls **95***a* and **95***b* at a rear end of the hopper **92**. A bottom portion **99** extends between the side walls **95***a* and **95***b* intermediate the deflector **96** and the end wall **97**. The bottom portion **99** defines the outlet opening **93** for receiving spent casings **84** and links **88**.

The front end of walls **95** include a pair of notches **98** configured to receive a pin **100** extending laterally proximate a front end of the cradle **28** between side members **29** (FIG. **3**). A collector **102** of the hopper **92** is defined between the side walls **95***a* and **95***b*, the deflector **96**, and the end wall **97**. A spacer tube **103** extends between a pair of apertures **104** formed within the side walls **95***a* and **95***b* and provides additional rigidity to the hopper **92**. The spacer tube **103** is configured to slidably receive a laterally extending pin **106** for securing the ejection chute assembly **90** to the cradle **28**. A cotter pin **105** is illustratively secured to the hopper **92** through a lanyard **107** and is configured to be received within an aperture **108** formed within the end of pin **106** to secure the pin **106** within the spacer tube **103**.

The ejection chute assembly **90** is configured to facilitate conveyance of spent casings **84** and links **88** away from the gun **12**, particularly when used in connection with a gun having a high rates of fire (for example GAU-21 with potential of 1,100 shots per minute). The deflector **96** cooperates with the outlet opening **93** to facilitate discharge of the spent casings **84** and links **88** into the ejection tube **94**. More particularly, the deflector **96** is angled relative to the gun **12** such that spent casings **84** deflect or ricochet off of the deflector **96**, pass through the outlet opening **93**, and into the ejection tube **94**, without tending to collect or jam by bridging the opening **93**. The angle of deflection of the spent casings **84** is determined by the angle of discharge of the casings **84** from the gun **12** and the angle of the deflector **96** relative to the gun **12**. In the illustrative embodiment shown in FIG. **6**, the deflector **96** is angled from the longitudinal axis **109** of the gun barrel by about 47 degrees (+/−5 degrees). As such, the angle α as shown in FIG. **20** is about 47 degrees (+/−5 degrees) and the angle between the bottom portion **99** and the deflector **96** is about 133 degrees (+/−5 degrees).

As shown in FIG. **19**, the ejection tube **94** illustratively includes a flexible portion **110** having an upper end coupled to a cylindrical connector **111** of the hopper **92** through a band clamp **112**. A bottom portion of the connector **111** has an enlarged, illustratively flared, portion **113** having an increased diameter to prevent the clamp **112**, and hence the tube **94**, from slipping off of the hopper **92**. An end sleeve **114** defines a lower open end **116** of the ejection tube **94** and is coupled to the flexible portion **110** through fasteners, such as grommets **118**. The flexible portion **110** is illustratively formed of a heat and flame resistant material. In one illustrative embodiment, the flexible portion **110** is formed of CEET ducting, including a support formed of a copper coated or bronze plated spring steel wire helix, a liner and a cover formed of woven fiberglass fabric impregnated and coated with neoprene rubber, and a fiberglass cord impregnated with neoprene rubber supported outside of the cover. The end sleeve **114** may comprise a heat shrinkable insulation sleeving that is configured to prevent damaging contact with the lower end of the flexible portion **110** and fraying thereof.

A securing device **120** illustratively secures the ejection tube **94** to the support **18**. The securing device **120** may comprise a releasable clip **122** coupled to a ring **124** which, in turn, is secured to the flexible portion **110** of the ejection tube **94** by a band clamp **126**. The clip **122** coupled to one of the sway members **19** of the support **18** to restrict movement of the ejection tube **94** (FIG. **2**).

An upper opening **128** of the hopper **92** collects the ejected casings **84** and directs them to the tube **94**. Similarly, first and second ports or receivers **130** are supported by opposing side walls **95** of the hopper **92** and collect the ejected links **88** and direct them to the tube **94**. As noted above, the links **88** are generally ejected from the side of machine gun **12** opposite the feed chute **26**. As such, a link chute **132** is coupled to the receiver **130** opposite the feed chute **26** (FIG. **2**). The opposing receivers **130** provides flexibility for coupling link chute **132** to opposing sides of the machine gun **12** depending upon the orientation thereof (for example, left or right side of the helicopter **16**). In other words, the link chute **132** may be positioned on either side of the machine gun **12**, opposite the feed chute **26**. The link chute **132** is illustratively formed of interconnected stainless steel segments to provide flexibility and may be manufactured by Standard Armament of Glendale, Calif.

In operation, ejected casings **84** drop through the upper opening **128** of the hopper **92**, while links **88** pass through the link chute **132** and through the receiver **130** of the hopper **92**. The casings **84** and links **88** pass through the collector **102** and down through the ejection tube **94**. The ejection tube **94** directs the ejected casings **84** and links **88** away from the helicopter **16**. Combining the casings **84** and links **88** in the hopper **92** reduces space requirements and reduces opera-

tional issues with the machine gun **12**. More particularly, the ejection chute assembly **90** facilitates ejection of casings **84** and links **88** associate with weapons operating at high rates of speed (for example, at the GAU-21 machine gun).

With reference to FIGS. **2-5** and **21**, the ammunition canister **82** is configured to be releasably coupled to the interior of the helicopter **16** through a mounting assembly **144**. As shown in FIGS. **22** and **23**, the canister **82** illustratively includes a first side wall **134**, and a second side wall **136** extending parallel to the first side wall **134**. A first end wall **138** extends between the first side wall **134** and the second side wall **136**. A second end wall **140** extends between the first side wall **134** and the second side wall **136** in spaced relation to the first end wall **138**. The storage compartment **81** is defined by the walls **134**, **136**, **138**, and **140** and is accessible through an open upper end **142**.

Referring now to FIGS. **22**, **24**, and **25**, the mounting assembly **144** includes a pair of first mounting members, illustratively a first or left receiver **146** and a second or right receiver **148** supported by a vertical mounting surface **150**. The mounting surface **150** may comprise the longitudinally extending transmission wall of the helicopter **16**. The receivers **146** and **148** each illustratively include a first or lower coupler **152***a* and a second or upper coupler **152***b* supported by a base **153** secured to mounting surface **150**. With reference to FIGS. **24** and **25**, each coupler **152***a* and **152***b* illustratively includes a C-shaped bracket **154** having an upper arm **156** and a lower arm **158** defining an end bracket receiving opening **160**. A resilient pad **161**, illustratively a polyurethane foam, may be supported by the base **153** and provides a cushion between the canister **82** and the mounting surface **150**.

Referring further to FIGS. **22** and **23**, a pair of second mounting members, illustratively a first or left end bracket **162** and a second or right end bracket **164** are secured to opposing first and second end walls **138** and **140**, respectively, of the canister **82**. Each bracket **162**, **164** includes laterally spaced apart openings **166***a* and **166***b* (FIG. **23**). The first end bracket **162** is configured to be releasably coupled to the first receiver **146**, and the second end bracket **164** is configured to be releasably coupled to the second receiver **148**. More particularly, a first pin **170** is illustratively slidably received by the first end bracket **162** and the lower coupler **152***a* of first receiver **146**, while a second pin **172** is illustratively slidably received by the second end bracket **164** and the lower coupler **152***a* of the second receiver **148**.

As shown in FIG. **22**, the arms **156** and **158** of the brackets **154** each include upper and lower bushings **171** and **173**, respectively, configured to slidably receive one of the pins **170** and **172**. Each pin includes a spring biased ball **174** configured to engage respective bushing **171**, **173** as the pin **170**, **172** is moved axially therethrough.

A third pin **176** is illustratively slidably received by the upper coupler **152***b* of the first receiver **146**, while a fourth pin **178** is illustratively slidably received by the upper coupler **152***b* of the second receiver **148**. The pins **170**, **172**, **176**, **178** are secured to the respective bases **153** by lanyards **180**.

The combination of lower coupler **152***a* and upper coupler **152***b* for each receiver **146** and **148** facilitates mounting of different size ammunition canisters to the mounting surface **120**. In the illustrative embodiment, the receiver **146** and **148** may be utilized to mount either GAU-21 or GAU-17 ammunition canisters. The upper couplers **152***b* provide additional flexibility in mounting canisters **82** of varying sizes (for example, to accommodate different types, sizes, and amounts of ammunition). For example, canister **82** of FIG. **22** includes only single brackets **162** and **164** on each end wall **138** and **140**, while larger canisters **82** may be taller and have a second set of brackets (not shown) above the brackets **162** and **164** for coupling with couplers **152***b*.

The left and right end brackets **162** and **164** are mirror images of each other to facilitate mounting of the canister **82** on either side of the helicopter **16**. In other words, the canister may be coupled with the first side wall **134** facing the mounting surface **150** in a first orientation, and may be coupled with the second side wall **134** facing the mounting surface **150** in a second orientation (i.e., rotated 180 degrees about a vertical axis).

With reference to FIGS. **26-28**, the ammunition canister **82** also includes a lid **182** coupled to second side wall **136** by a hinge **184** to cover at least a portion of open upper end **142**. A latch **186** is supported opposite the hinge **184** and is configured to engage a catch **188** supported by the first side wall **134**.

As shown in FIG. **22**, a first outlet opening **190** is defined between the lid **182** and the first end wall **138**, while a second outlet opening **192** is defined between the lid **182** and the second end wall **140**. The ammunition feed chute **26** may be operably coupled to the canister **82** above the first outlet opening **190** in the first orientation of the canister **82** (FIG. **21**), and may be operably coupled to the canister **82** above the second outlet opening **192** in the second orientation of the canister **82**. A first pair of feed chute catches **194** are supported by the first and second side walls **134** and **136** adjacent the first outlet opening **190**, and a second pair of feed chute catches **196** are supported by the first and second side walls **134** and **136** adjacent the second outlet opening **192**. Rollers **198** are provided on opposing sides of the lid **182** to facilitate feeding of the ammunition belt **24** from the canister **82** through the feed chute **26**.

The ammunition feed chute **26** extends from the outlet opening **190**,**192** of the ammunition canister **82** to a receiver chamber **199** of the gun **12**. The canister **82** is mounted adjacent the vertical mounting surface **150** and the floor **151** to minimize the consumption of usable space within the enclosure **13**, and to ensure sufficient positioning of the feed chute **26** so it limits restrictions on movement of the ammunition belt **24** through the feed chute **26** over the full range of movement of the gun **12**. The outlet opening **190**, **192** of the ammunition canister **82** is illustratively positioned below the receiver chamber **199** of the gun **12** to reduce the bending of the feed chute **26** therebetween and limit the drag on the ammunition belt **24** traveling through the feed chute **26**.

With reference to FIGS. **26** and **27**, end walls **138** and **140** of the canister **82** include sights **200** such that ammunition belt **24** remaining in the storage compartment **81** of canister **82** is visible. As such, the operator can view how much ammunition is remaining or needs to be added. Illustratively, the sight **200** comprises a pair of upper vertical slots **202** formed in the first and second end walls **138** and **140** above the respective end brackets **162** and **164**, and a pair of lower vertical slots **204** formed in the first and second end walls **138** and **140** below the respective end brackets **162** and **164**.

While this invention has been described as having an exemplary design, the present invention may be further modified within the spirit and scope of this disclosure. This application is therefore intended to cover any variations, uses, or adaptations of the invention using its general principles. Further, this application is intended to cover such departures from the present disclosure as come within known or customary practice in the art to which this invention pertains.

The invention claimed is:

1. An aircraft comprising:

an enclosure including a vertical mounting surface and a horizontal floor;

a structure coupled to the enclosure in spaced relation to the vertical mounting surface;

a gun including a receiver chamber and supported by the structure for a first rotation about a first axis, and for a second rotation about a second axis, the second axis perpendicular to the first axis;

an ammunition canister including an outlet opening and coupled to the vertical mounting surface adjacent the horizontal floor;

a feed chute configured to convey an ammunition belt from the outlet opening of the ammunition canister to the receiver chamber of the gun;

wherein the outlet opening of the ammunition canister is positioned below the receiver chamber of the gun to reduce the bending of the feed chute therebetween and limit the drag on the ammunition belt traveling through the feed chute;

a first end bracket secured to a first end of the canister;

a second end bracket secured to a second end of the canister;

a first end receiver configured to be secured to the vertical mounting surface and to receive the first end bracket;

a second end receiver configured to be secured to the vertical mounting surface and to receive the second end bracket;

a first pin configured to be slidably received by the first end bracket and the first end receiver for releasably coupling the first end bracket to the first end receiver; and

a second right pin configured to be slidably received by the second end bracket and the second end receiver for releasably coupling the second end bracket to the second end receiver;

a lid to at least partially cover an open upper end;

wherein a first outlet opening is defined between the lid and the first end wall, and a second outlet opening is defined between the lid and the second end wall;

wherein the feed chute extends above the first opening in a first orientation of the canister and extends above the second opening in a second orientation of the canister, the second orientation being rotated 180 degrees about a vertical axis.

* * * * *