US008151683B2

(12) **United States Patent**
Dick et al.

(10) **Patent No.: US 8,151,683 B2**
(45) **Date of Patent: Apr. 10, 2012**

(54) **LINK CHUTE EJECTION ADAPTER**

(75) Inventors: **Glen Dick**, Jasper, IN (US); **James Buechler**, Jasper, IN (US); **Michael Holzmeyer**, Bloomfield, IN (US)

(73) Assignee: **The United States of America as represented by the Secretary of the Navy**, Washington, DC (US)

(*) Notice: Subject to any disclaimer, the term of this patent is extended or adjusted under 35 U.S.C. 154(b) by 365 days.

(21) Appl. No.: **12/568,462**

(22) Filed: **Sep. 28, 2009**

(65) **Prior Publication Data**

US 2010/0319521 A1 Dec. 23, 2010

Related U.S. Application Data

(60) Provisional application No. 61/219,599, filed on Jun. 23, 2009.

(51) **Int. Cl.**
F41A 9/34 (2006.01)

(52) **U.S. Cl.** **89/33.14**

(58) **Field of Classification Search** 89/33.14, 89/33.16, 33.2, 33.25
See application file for complete search history.

(56) **References Cited**

U.S. PATENT DOCUMENTS

2,384,678	A	9/1945	Holton	
2,603,130	A	7/1952	Bonkemeyer	
2,889,751	A *	6/1959	Bilek	89/34
3,229,584	A *	1/1966	Zehuder	89/33.25
3,855,686	A	12/1974	Snyder	
3,955,469	A *	5/1976	Conley	89/33.14
6,286,411	B1	9/2001	Sanderson	
6,443,044	B1 *	9/2002	Dillon	89/12
7,258,055	B1	8/2007	Javorsky	
7,543,524	B1	6/2009	Javorsky	

OTHER PUBLICATIONS

Photos—FN Herstal link chute adapter-5 pages (prior to Jun. 10, 2009).
Photos—Navy Part No. 3392A5371 link chute adapter-4 pages (prior to Jun. 10, 2009).

* cited by examiner

Primary Examiner — Stephen M Johnson
(74) *Attorney, Agent, or Firm* — Christopher A. Monsey

(57) **ABSTRACT**

A link chute ejection adapter for conveying spent links of an ammunition belt from the receiver chamber of a machine gun to a link chute.

17 Claims, 15 Drawing Sheets

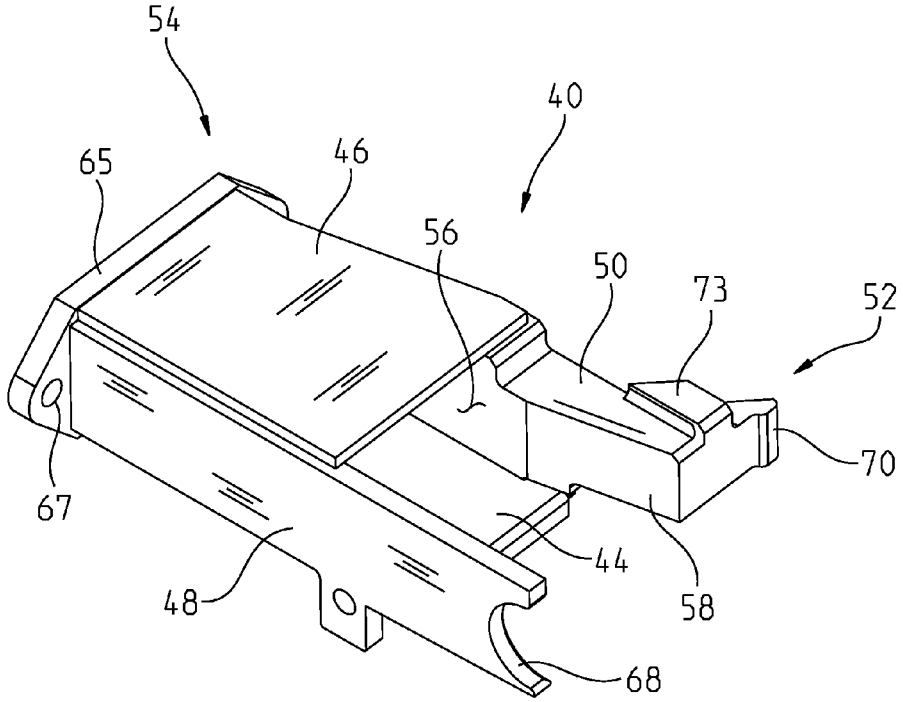

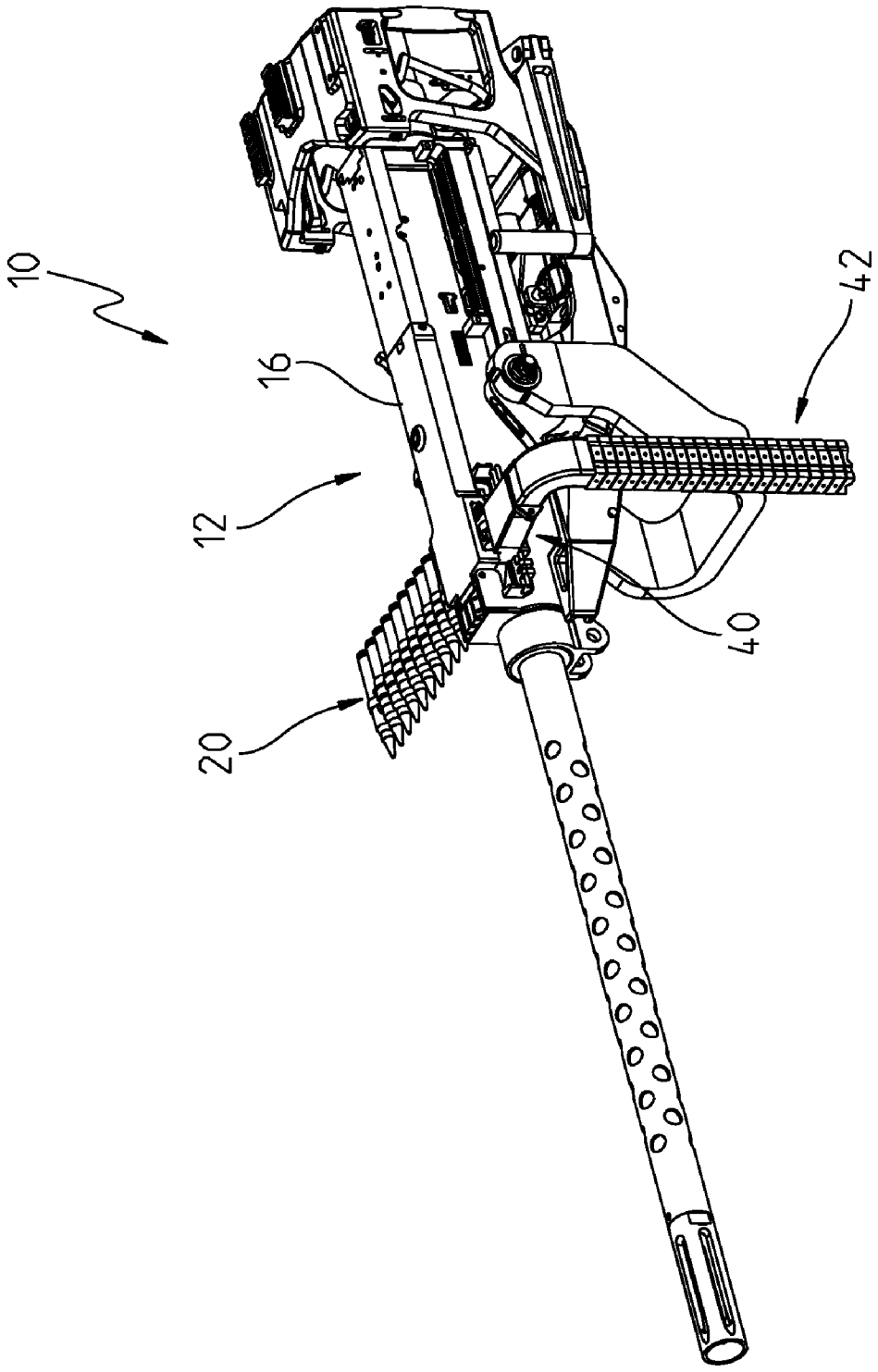

FIG. 1

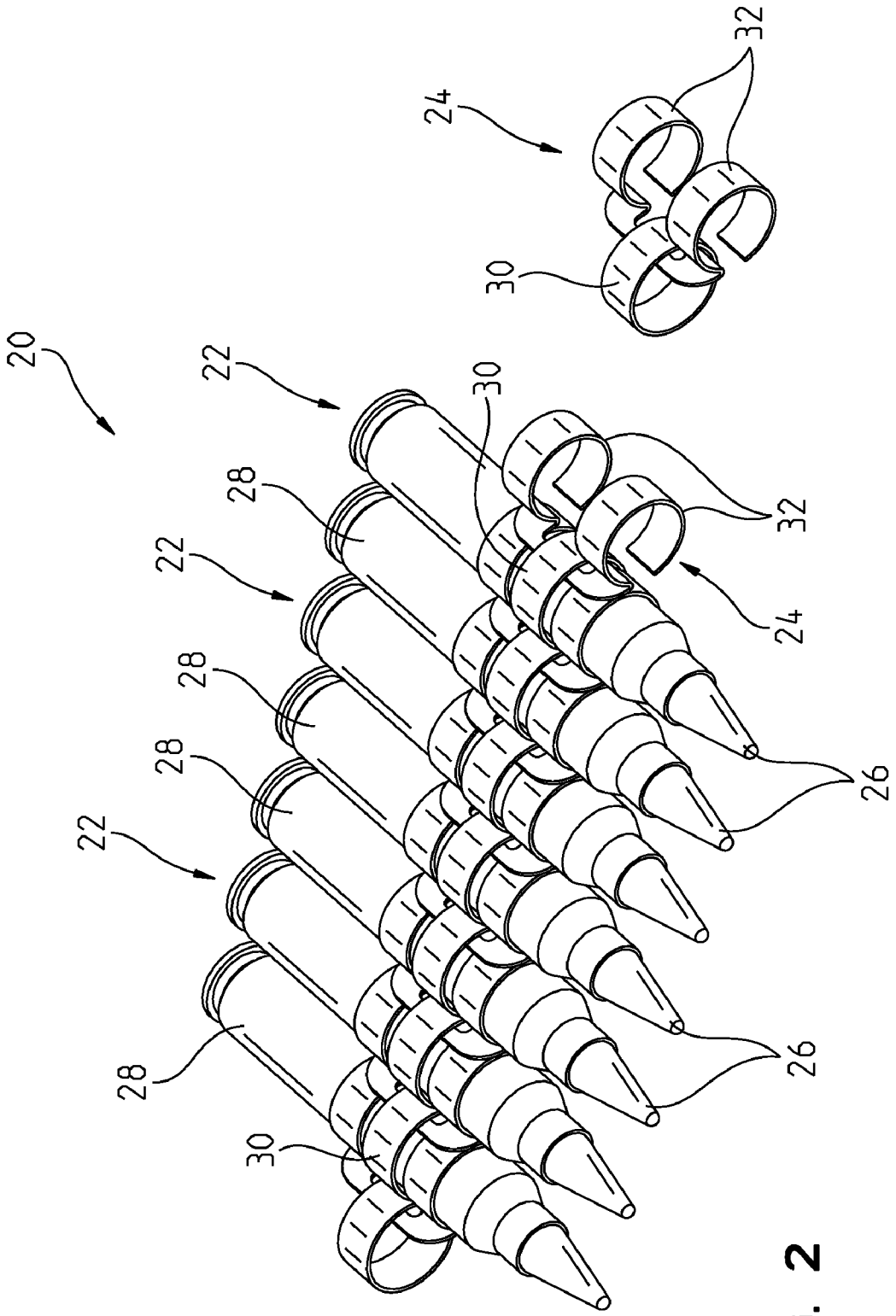

FIG. 2

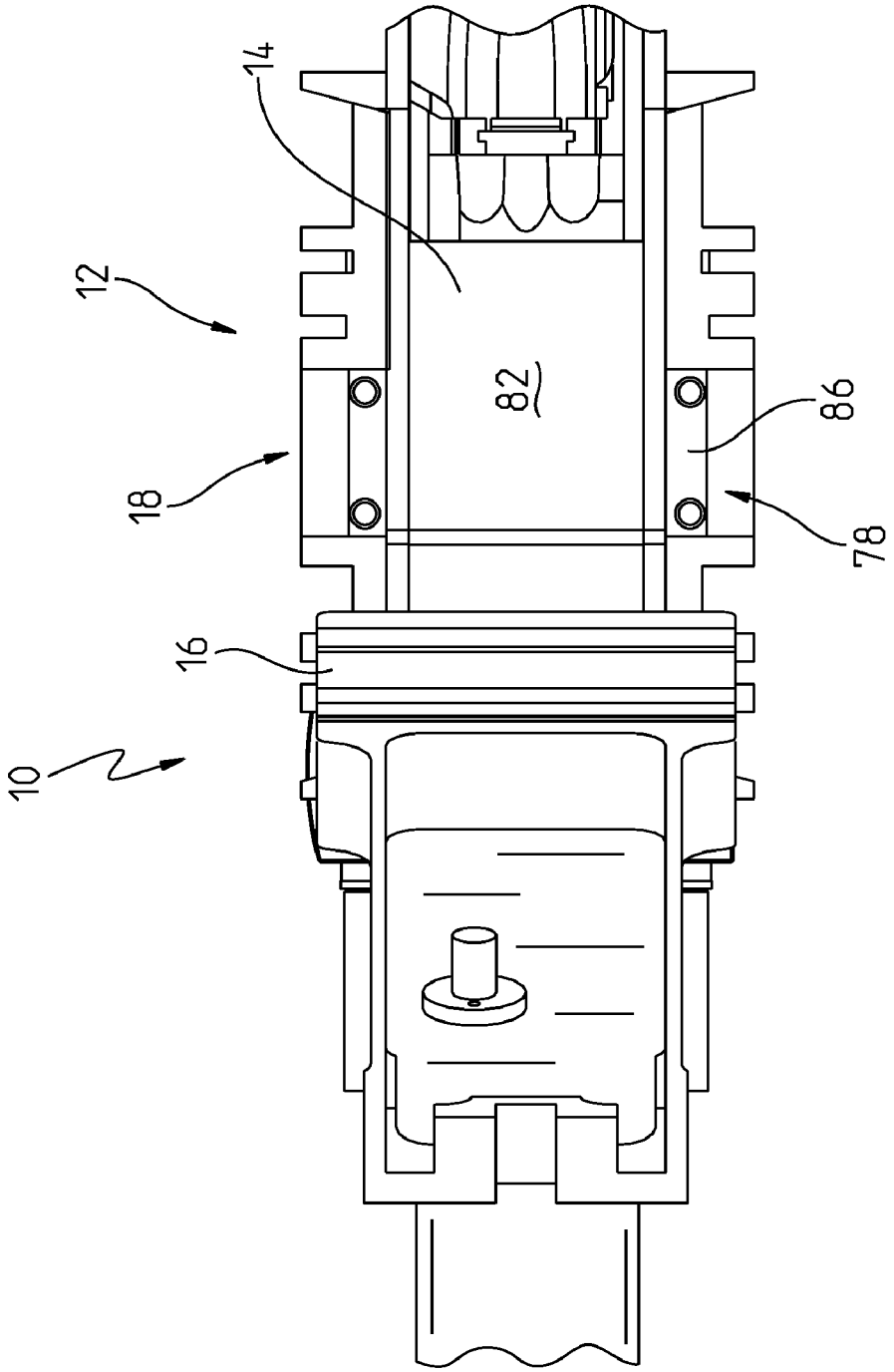

FIG. 3

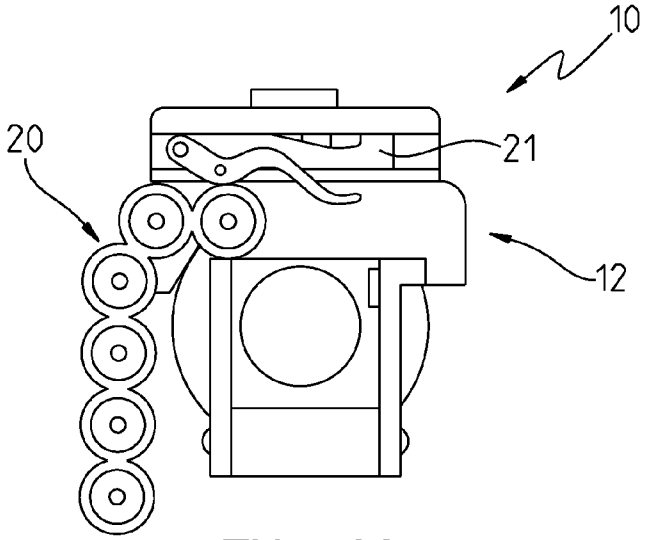

FIG. 4A

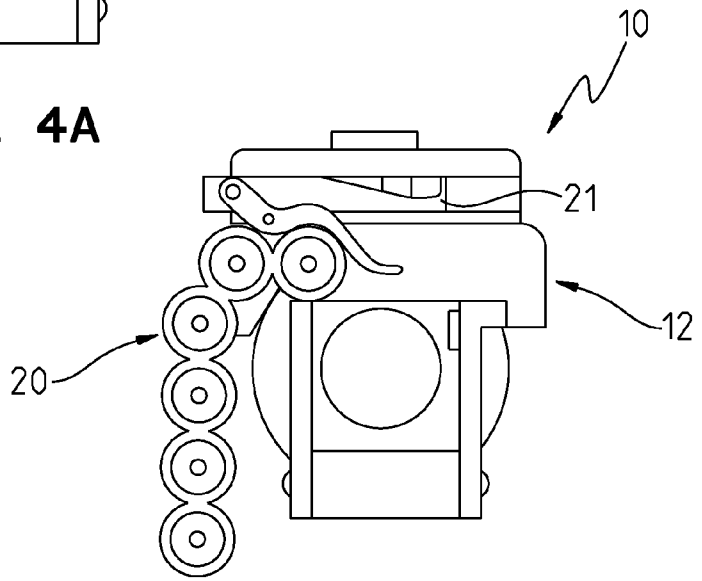

FIG. 4B

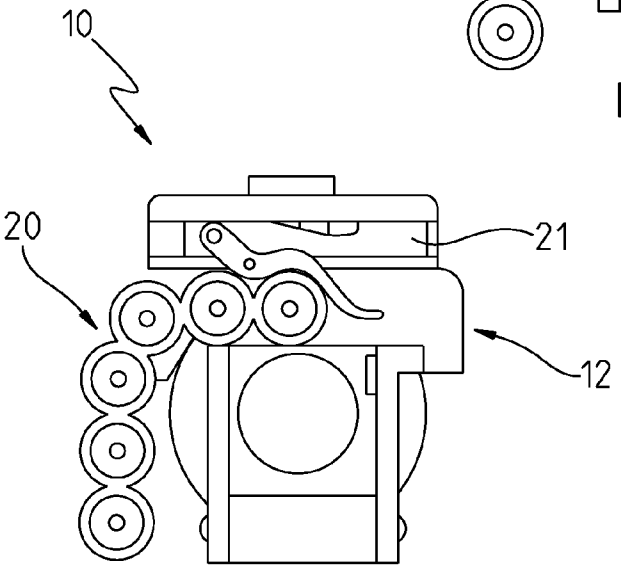

FIG. 4C

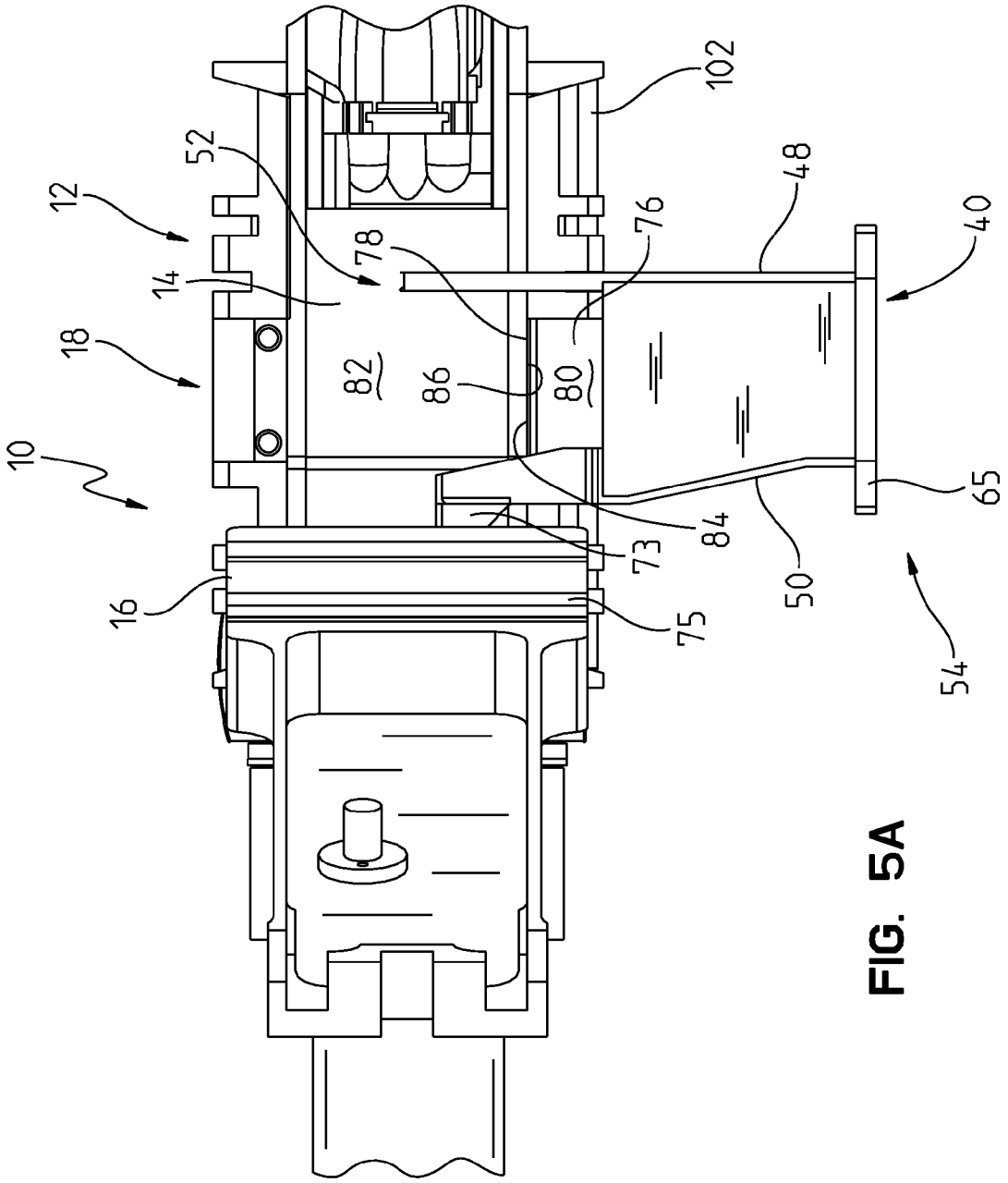

FIG. 5A

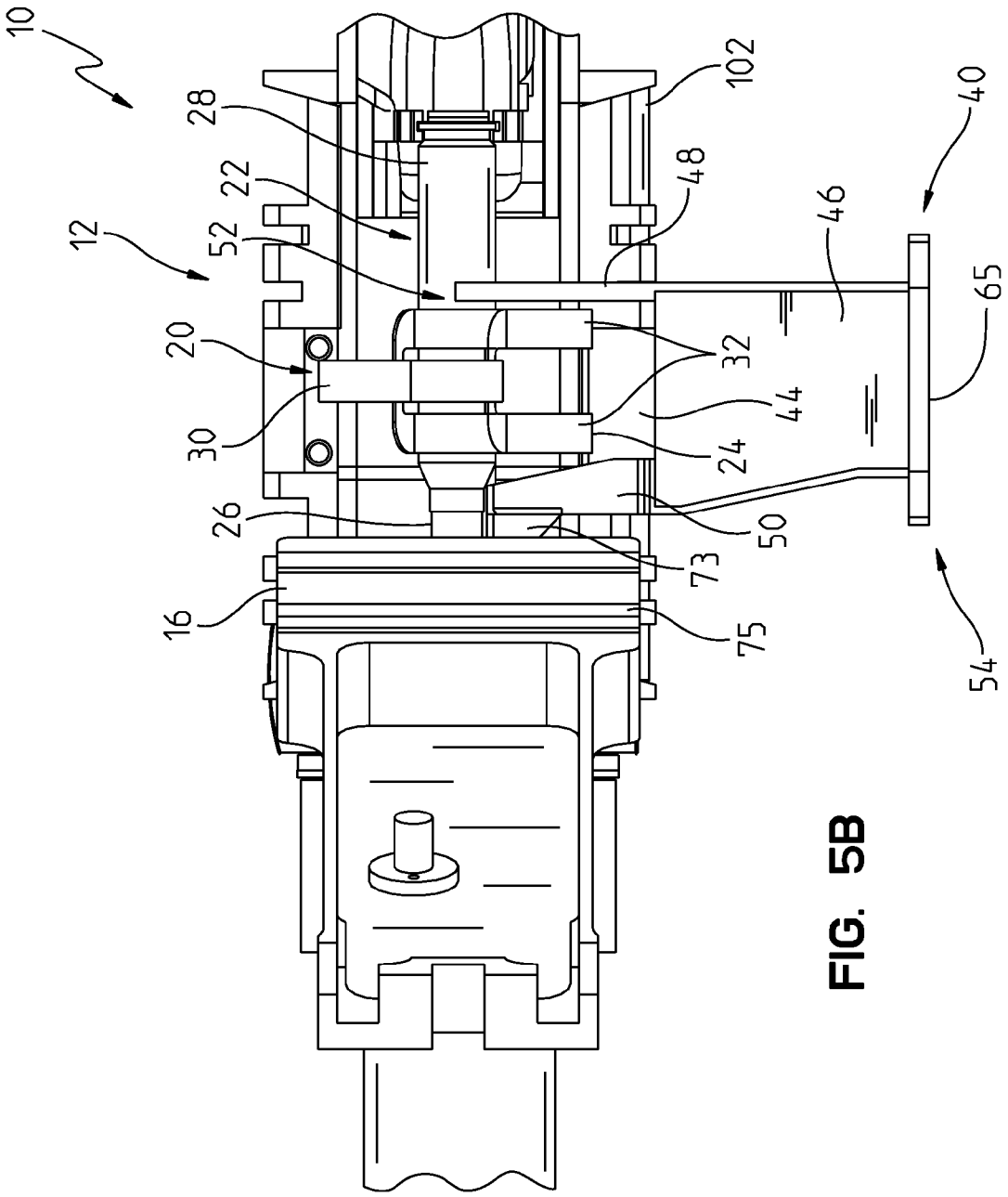

FIG. 5B

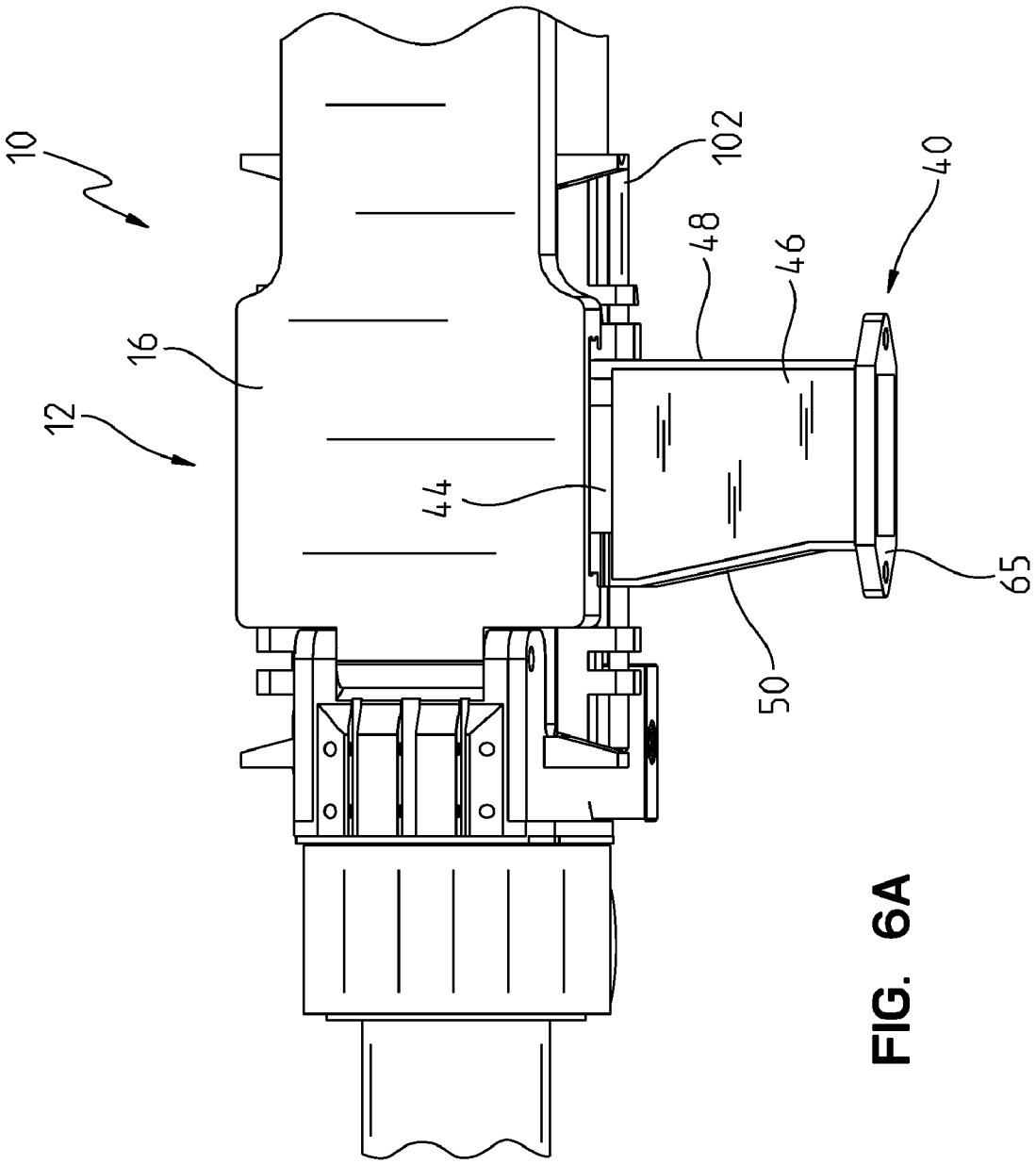

FIG. 6A

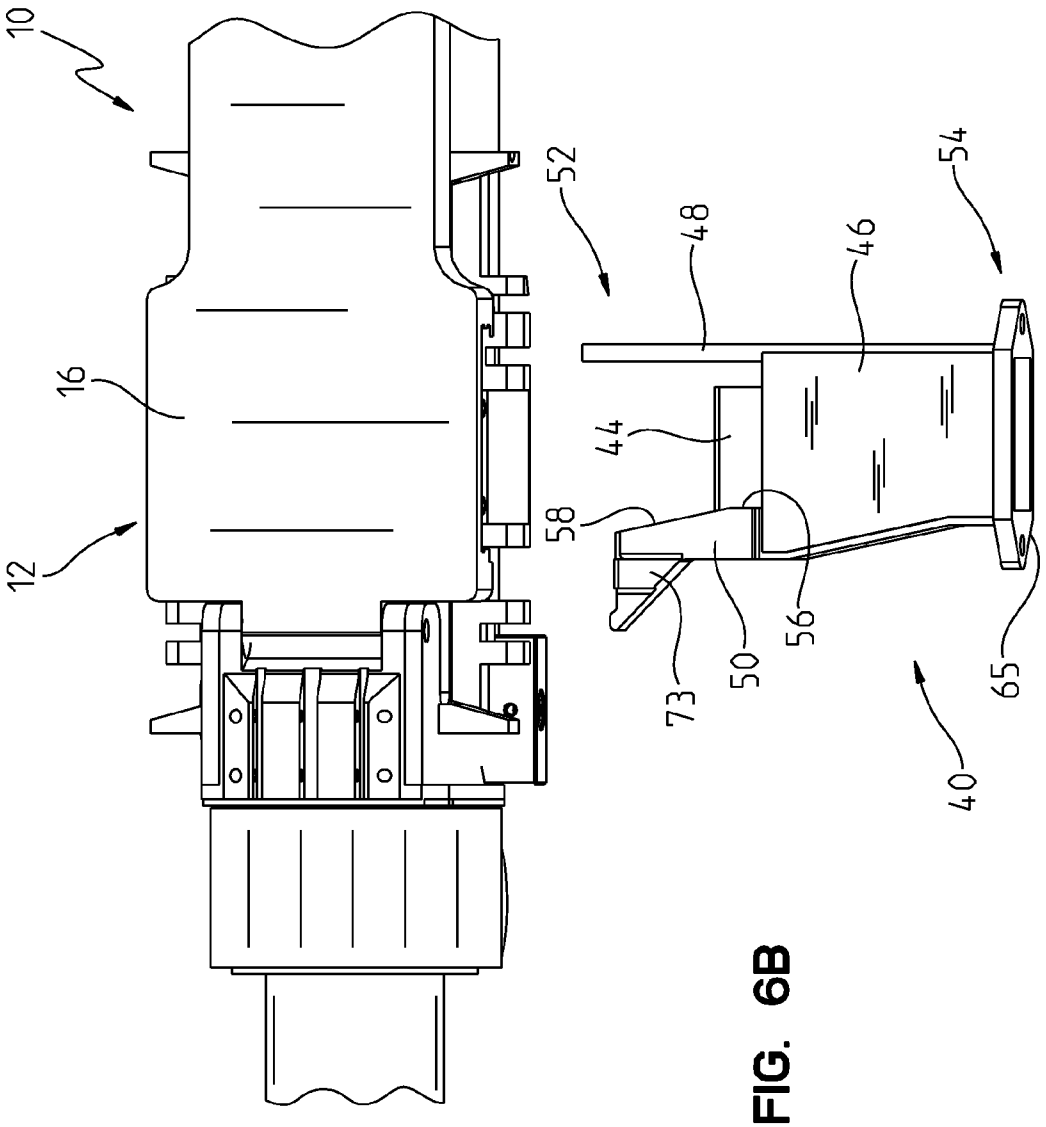

FIG. 6B

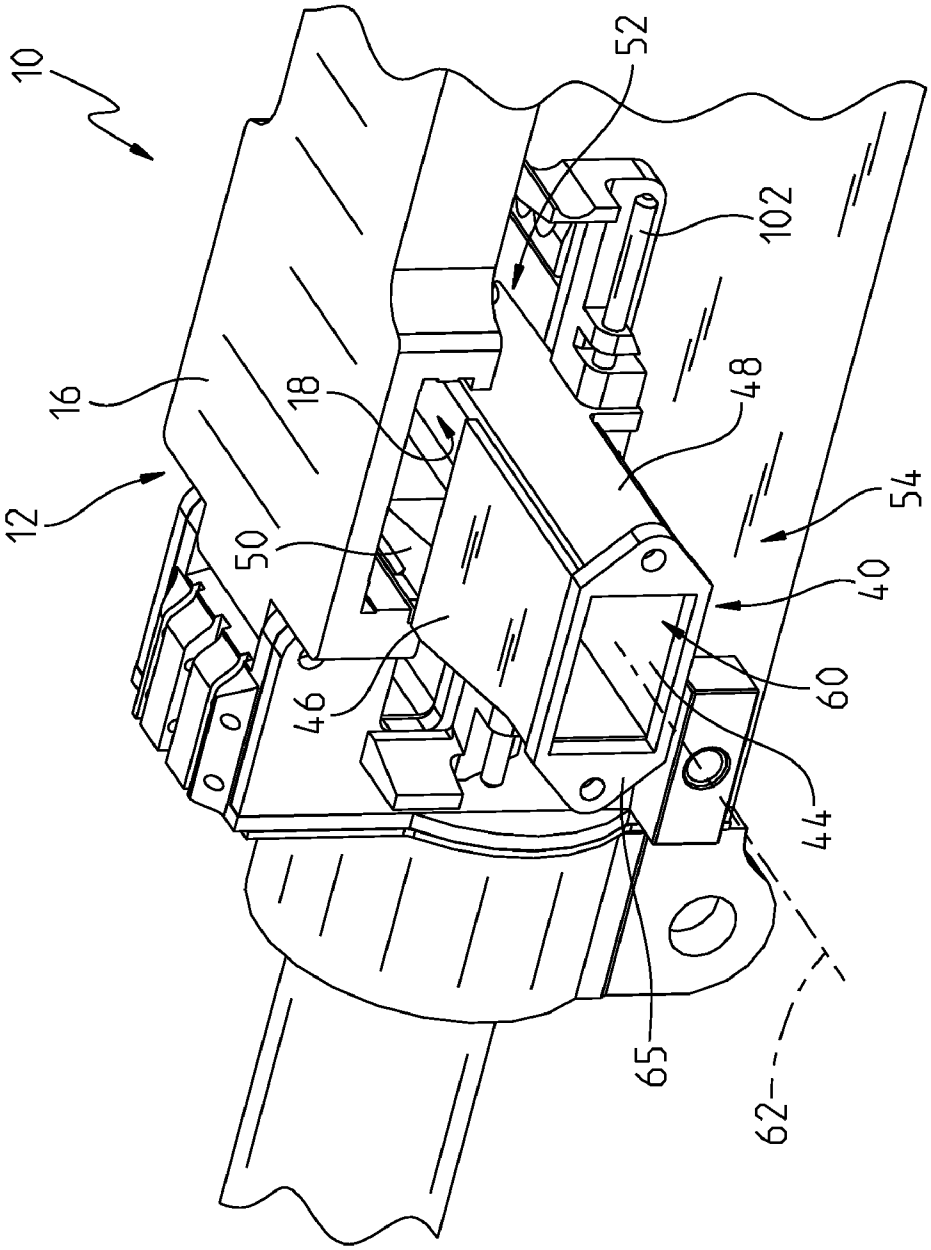

FIG. 7

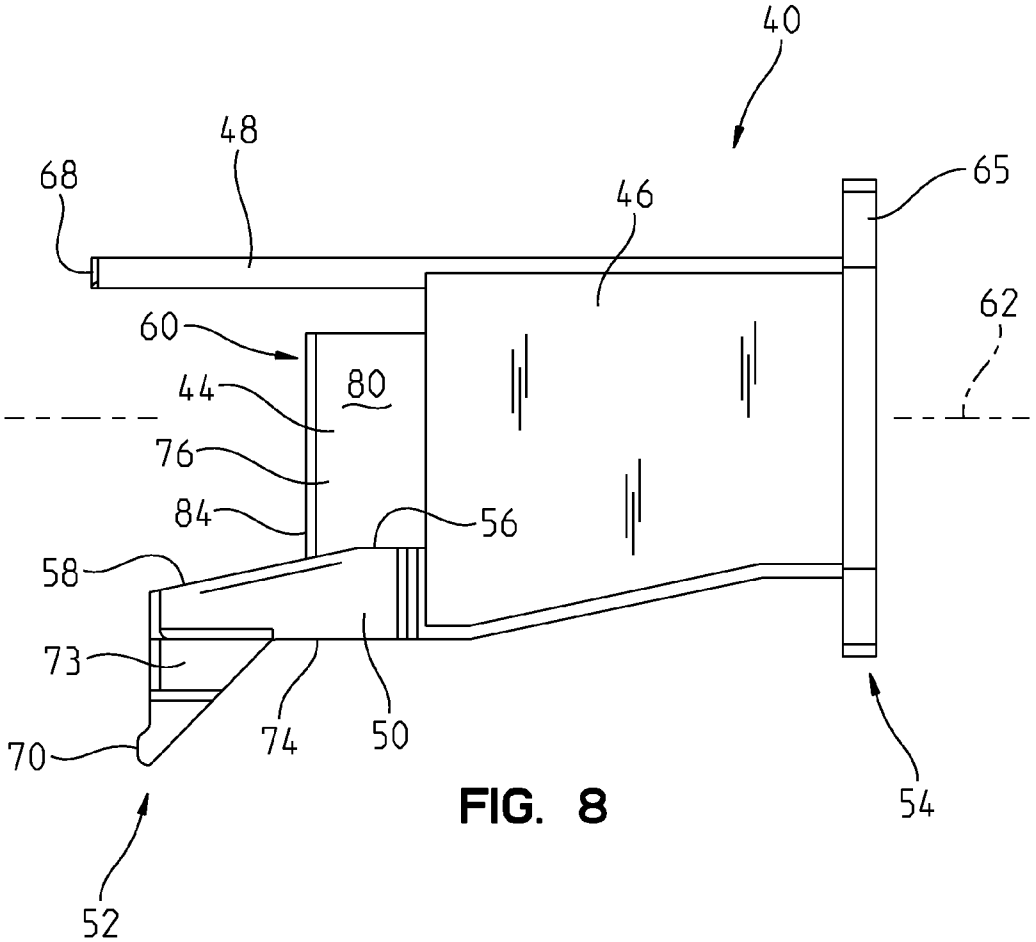
40
48
68
46
65
62
60
44
80
76
84
56
58
73
74
50
70
54
52

FIG. 8

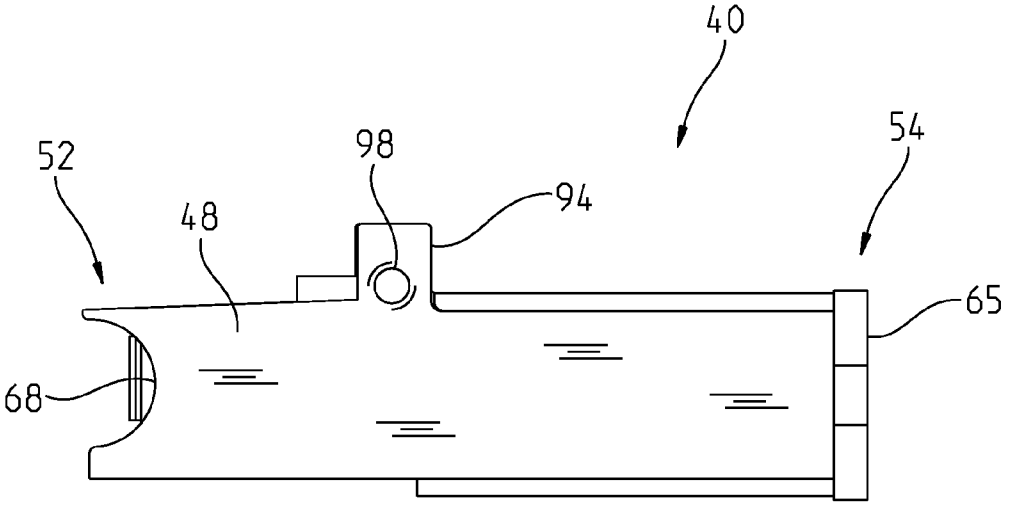
40
52
98
54
94
48
65
68

FIG. 9

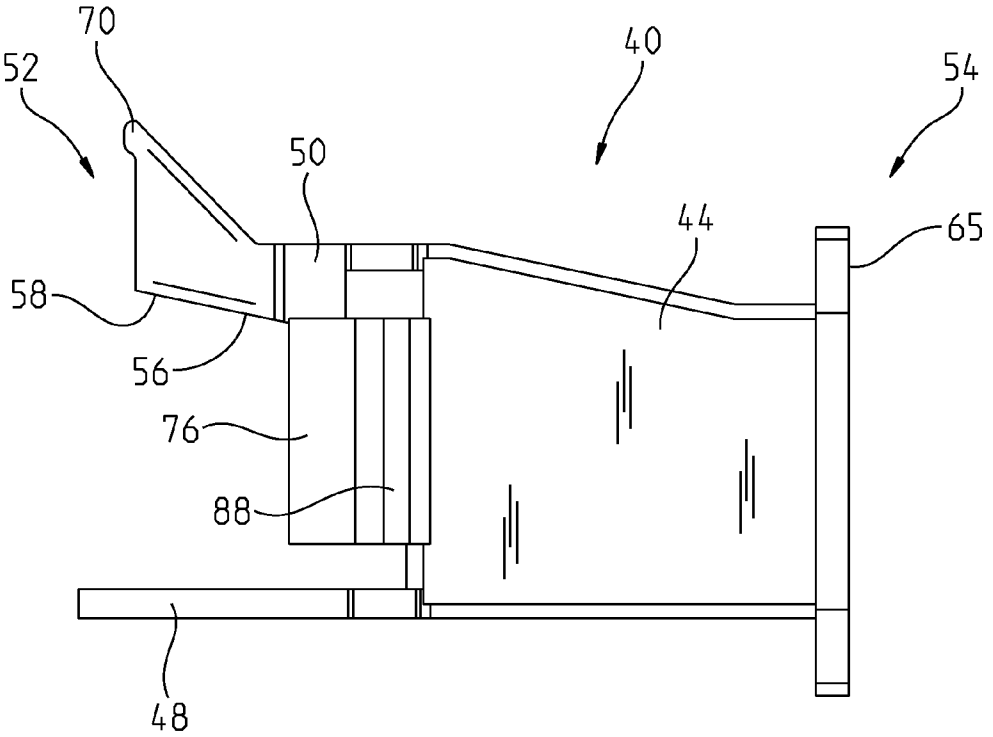

FIG. 10

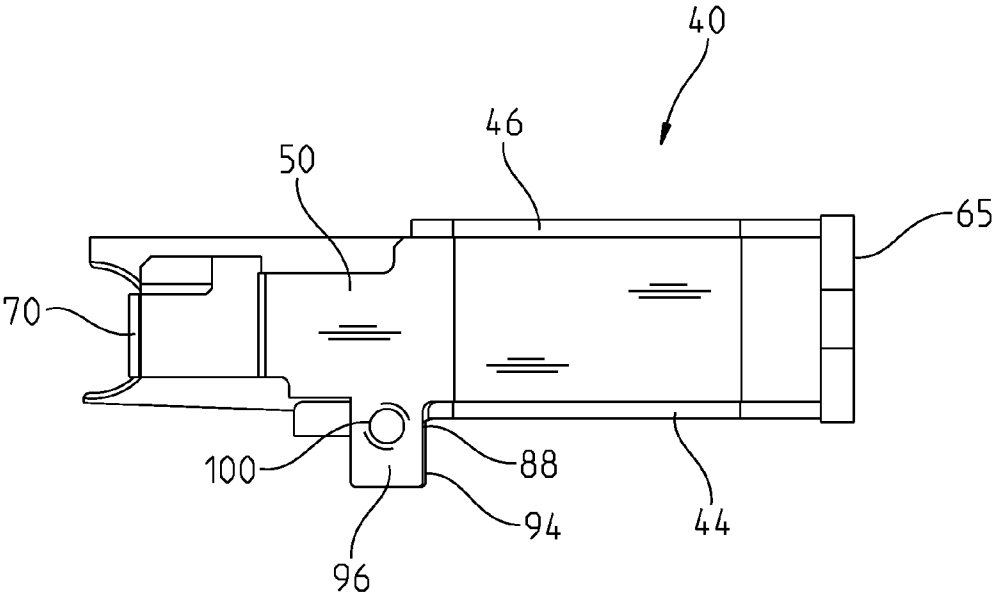

FIG. 11

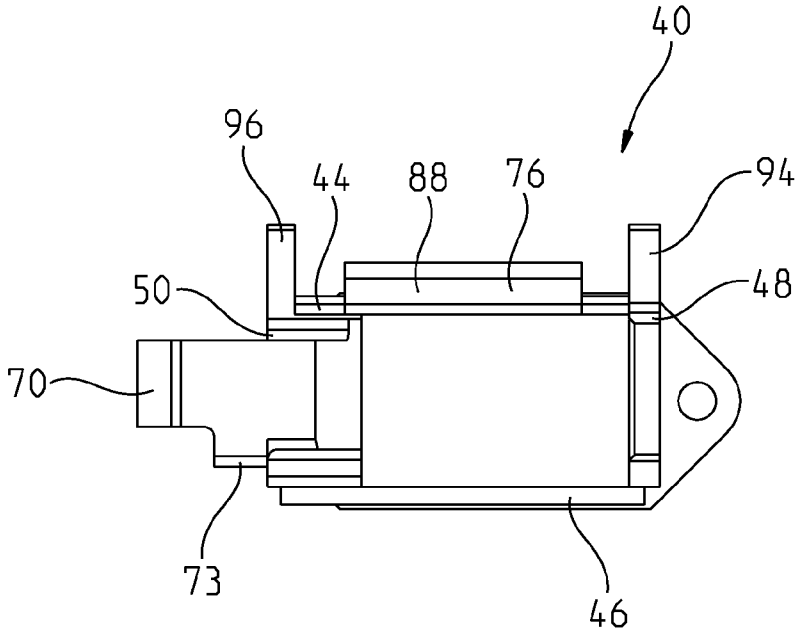
40
96
44
88
76
94
50
48
70
73
46

FIG. 12

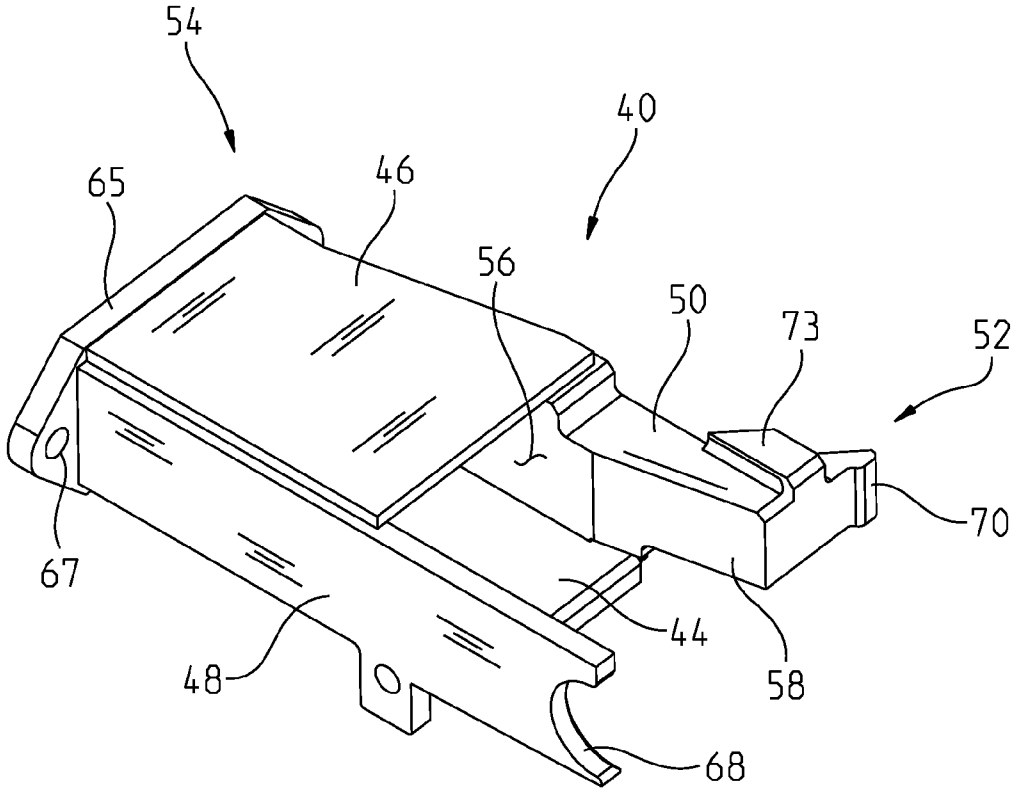
54
40
65
46
56
50
73
52
70
67
44
48
58
68

FIG. 13

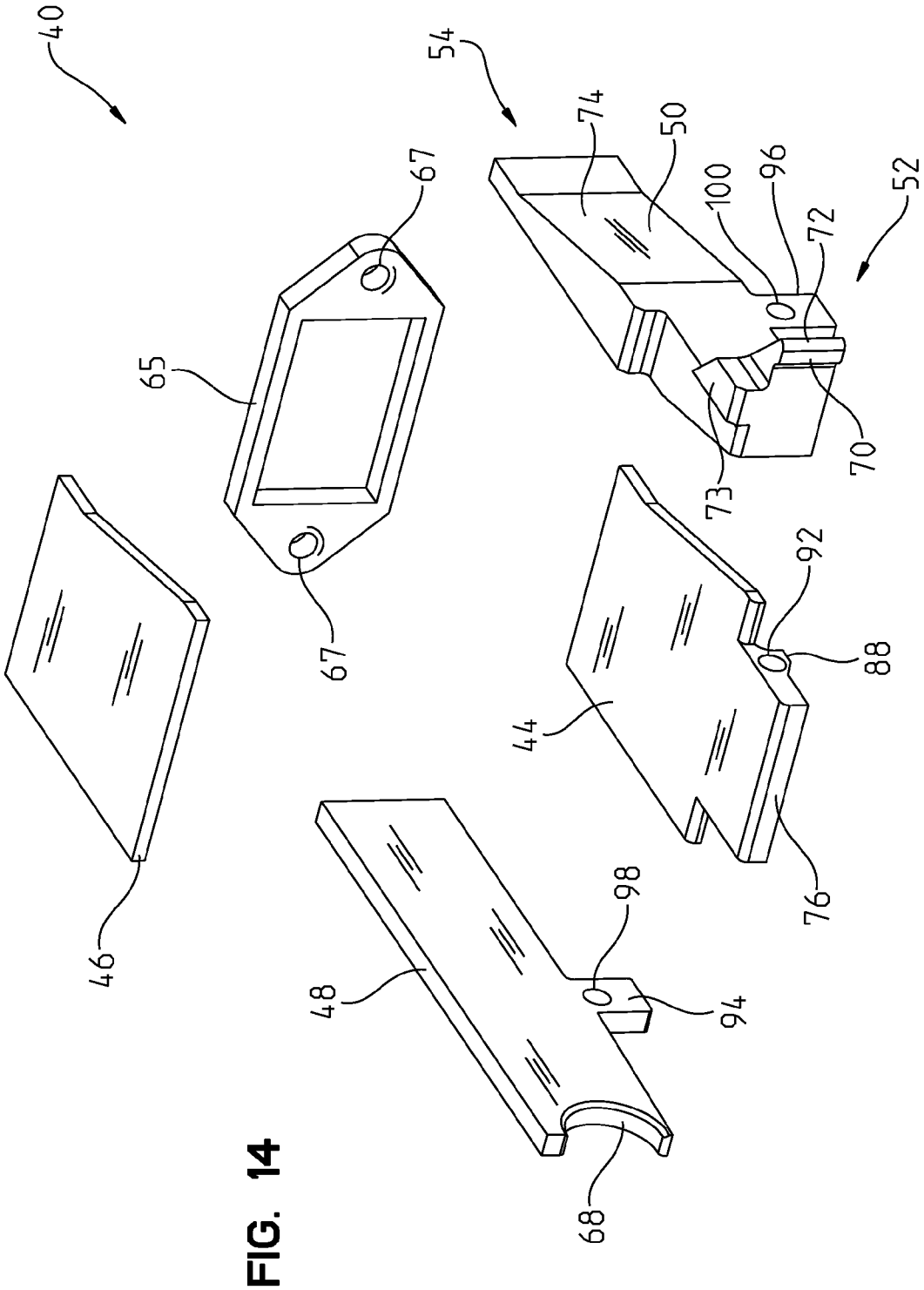

FIG. 14

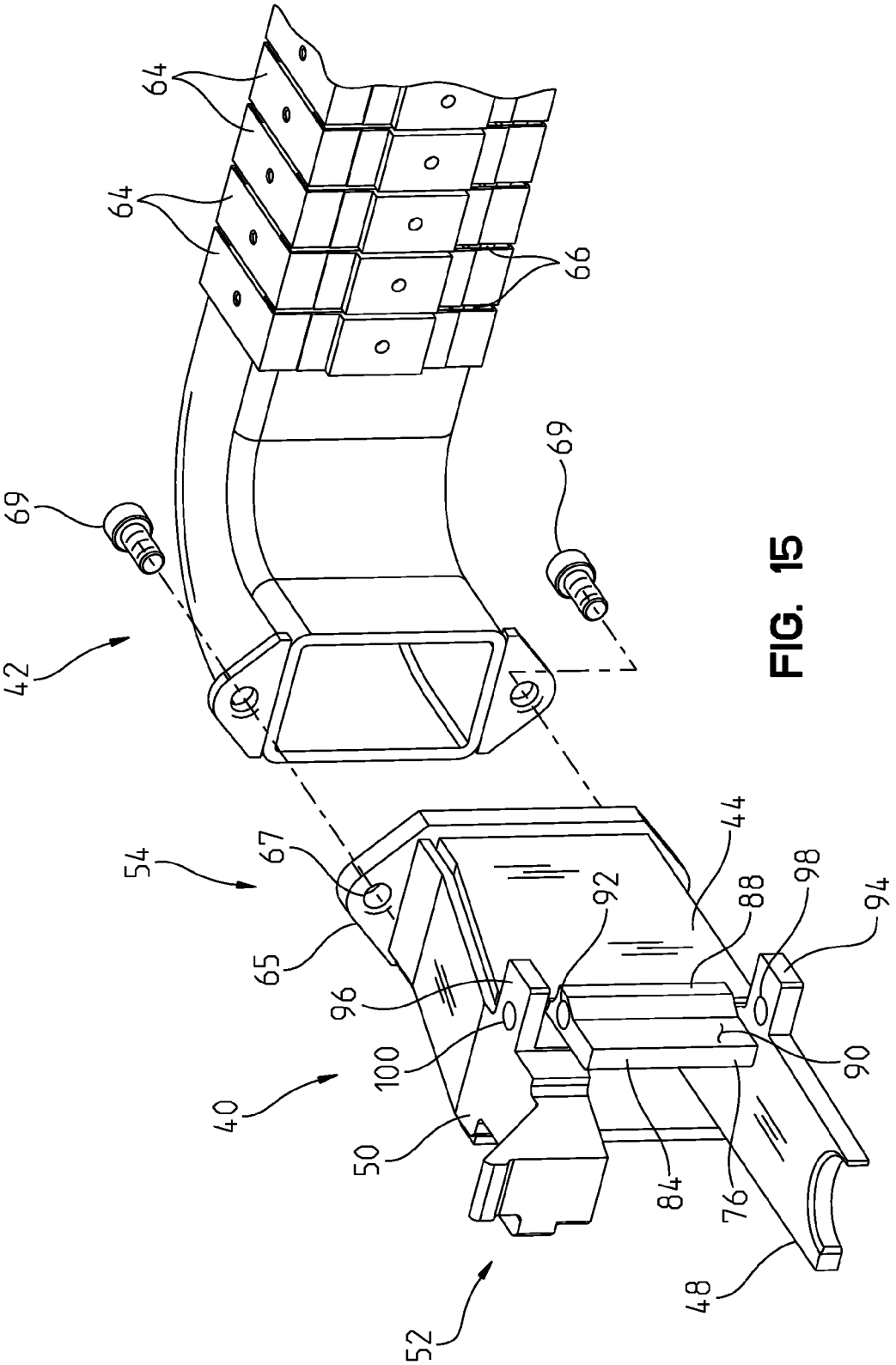

FIG. 15

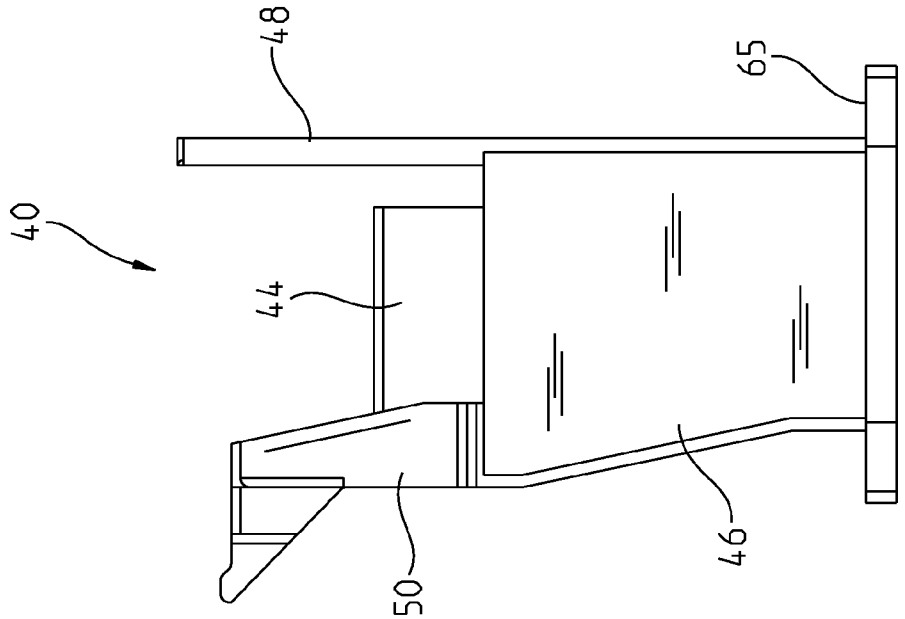

FIG. 16B

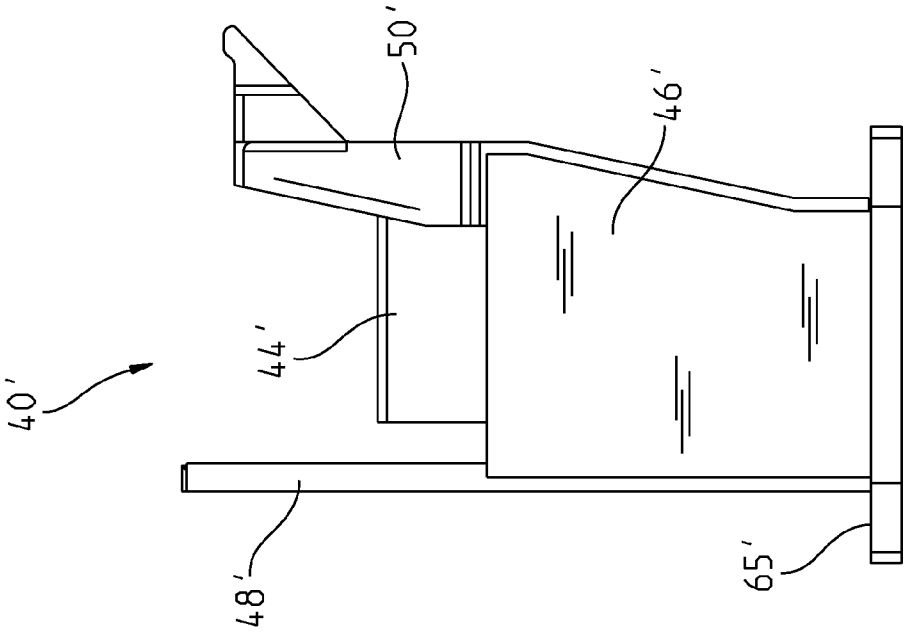

FIG. 16A

LINK CHUTE EJECTION ADAPTER

CROSS-REFERENCE TO RELATED APPLICATION

The present application claims priority to U.S. Provisional Patent Application Ser. No. 61/219,599, filed Jun. 23, 2009, the disclosure of which is expressly incorporated by reference herein.

STATEMENT REGARDING FEDERALLY SPONSORED RESEARCH OR DEVELOPMENT

The invention described herein includes contributions by one or more employees of the Department of the Navy made in performance of official duties and may be manufactured, used and licensed by or for the United States Government for any governmental purpose without payment of any royalties thereon.

BACKGROUND AND SUMMARY OF THE DISCLOSURE

The present disclosure relates generally to weapons systems and, more particularly, to a link chute ejection adapter for conveying spent links of an ammunition belt from the receiver chamber of a machine gun to a link chute.

Conventional automatic weapons, such as machine guns, are often configured to utilize ammunition belts including a plurality of rounds successively coupled together through the use of links. More particularly, the rounds typically include a casing for a bullet, wherein successive casings are coupled together utilizing metal links. The ammunition belt is illustratively fed through the receiver chamber of the machine gun utilizing a feed slider assembly. Once the bullet has been discharged from the casing during operation of the gun, the casing is typically ejected downwardly from the receiver chamber. The spent links are typically ejected laterally outwardly from the receiver chamber and into a link chute. While link chute ejection adapters have been utilized in the past to facilitate conveyance of spent links to the link chute, jamming of the links within prior art link chute ejection adapters has been a recurring problem.

According to an illustrative embodiment of the present disclosure, a link chute ejection adapter for a weapon discharging rounds from an ammunition belt includes a base, and a cover positioned above the base. A first side wall is coupled to the base and the cover, and includes a proximal end configured to be removably received within a receiver chamber of the weapon. A second side wall is positioned in spaced relation to the first side wall and is coupled to the base and the cover. The base includes a tongue supported at the proximal end for mating with the floor of the receiver chamber of the weapon, and a mounting boss extending downwardly from the tongue. A link chute coupler is supported at the distal end of the base. An ejection chamber is defined by the base, the cover, the first side wall, and the second side wall. The ejection chamber extends in an axial direction generally along a longitudinal axis from a proximal end to a distal end, the proximal end being coupled to the receiver chamber of the weapon and the distal end being coupled to an ejection chute. A casing stop is supported by the proximal end of the first side wall for locating a casing of the ammunition belt. A bullet stop is supported by the proximal end of the second side wall for locating a bullet of the ammunition belt. The bullet stop includes a finger extending axially outwardly away from the ejection chamber and transversely outwardly away from an outer surface of the second side wall.

According to another illustrative embodiment of the present disclosure, a method of ejecting spent links from a weapon system includes the steps of aligning a link ejection chute adapter to a receiver of a weapon such that a tongue at the proximal end of the link chute ejection adapter is substantially flush with a receiving floor of the receiver, and coupling the link chute ejection adapter to the receiver. The method further includes the steps of coupling a link chute to a distal end of the link ejection chute adapter, and drawing an ammunition belt into a receiver chamber of the weapon, the ammunition belt including rounds of ammunition connected by links, each of the rounds including a bullet and a casing. The method also includes the steps of locating a casing of the ammunition when the round is drawn into the receiver chamber of the weapon by a casing stop member supported at a proximal end of a first side wall of the link ejection chute adapter, and locating a bullet of the ammunition when the round is drawn into the receiver chamber of the weapon by a bullet stop member supported at the proximal end of a second side wall of the link ejection chute adapter. The method further includes the steps of expelling the bullet from the casing, wherein the bullet is expelled from the casing by activation of a firing mechanism of the weapon, ejecting the casing from the receiver chamber, wherein the casing is ejected downwardly from the weapon following the expelling of the bullet from the casing, ejecting the link from the receiver chamber, wherein the link is ejected laterally from the receiver chamber, and guiding the link into the link ejection chute adapter.

BRIEF DESCRIPTION OF THE DRAWINGS

The foregoing aspects and many of the attendant advantages of this invention will become more readily appreciated as the same become better understood by reference to the following detailed description when taken in conjunction with the accompanying drawings.

FIG. **1** is a perspective view of an illustrative machine gun for use with the link chute ejection adapter of the present disclosure;

FIG. **2** is a partially exploded perspective view of an illustrative ammunition belt for use with the machine gun of FIG. **1**;

FIG. **3** is a top perspective view of an illustrative receiver of the machine gun of FIG. **1**;

FIGS. **4**A-**4**C are cross-sectional views, in partial schematic, of the receiver of FIG. **3** showing an ammunition belt being fed therethrough;

FIG. **5**A is a top perspective view showing the link chute ejection adapter of the present disclosure coupled to the machine gun of FIG. **3**, with the receiver lid in an open position;

FIG. **5**B is a perspective view similar to FIG. **5**A, showing a round and link within the receiver;

FIG. **6**A is a perspective view similar to FIG. **5**A, showing the receiver lid in a closed position;

FIG. **6**B is a top perspective view of a link chute ejection adapter of FIG. **6**A, showing the adapter uncoupled from the machine gun;

FIG. **7** is a side perspective view of the link chute ejection adapter of FIG. **6**A coupled to the machine gun;

FIG. **8** is a further top perspective view of the link chute ejection adapter of FIGS. **6**A and **6**B;

FIG. **9** is a first side view of the link chute ejection adapter of FIG. **8**A;

FIG. **10** is a bottom perspective view of the link chute ejection adapter of FIG. **8**;

FIG. **11** is a second side view of the link chute ejection adapter of FIG. **8**;

FIG. **12** is an end view of the link chute ejection adapter of FIG. **8**;

FIG. **13** is a rear perspective view of the link chute ejection adapter of FIG. **8**;

FIG. **14** is an exploded perspective view of the link chute ejection adapter of FIG. **8**;

FIG. **15** is a perspective view showing a link chute configured to be coupled to the link chute ejection adapter of FIG. **8**;

FIG. **16**A is a top perspective view showing the left link chute ejection adapter of FIG. **8**; and

FIG. **16**B is a top perspective view similar to FIG. **16**A showing a right link chute ejection adapter, the right link chute ejection adapter being a mirror image of the left link chute ejection adapter.

Corresponding reference characters indicate corresponding parts throughout the several views. Although the drawings represent embodiments of various features and components according to the present disclosure, the drawings are not necessarily to scale and certain features may be exaggerated in order to better illustrate and explain the present disclosure. The exemplification set out herein illustrates embodiments of the invention, and such exemplifications are not to be construed as limiting the scope of the invention in any manner.

DETAILED DESCRIPTION OF THE DRAWINGS

For the purposes of promoting an understanding of the principles of the invention, reference will now be made to the embodiments illustrated in the drawings, which are described below. The embodiments disclosed below are not intended to be exhaustive or limit the invention to the precise form disclosed in the following detailed description. Rather, the embodiments are chosen and described so that others skilled in the art may utilize their teachings. It will be understood that no limitation of the scope of the invention is thereby intended. The invention includes any alterations and further modifications in the illustrated devices and described methods and further applications of the principles of the invention which would normally occur to one skilled in the art to which the invention relates.

Referring initially to FIGS. **1**-**3**, a weapon **10**, illustratively a 50 caliber machine gun, includes a receiver **12** having a floor **14** and a hinged lid **16** defining a receiver chamber **18**. As is known, an ammunition belt **20** is configured to be drawn or pulled by a feed slide assembly **21** into receiver chamber **18** across upper surface **82** of floor **14** (FIGS. **4**A-**4**C). As shown in FIG. **2**, ammunition belt **20** typically includes a plurality of rounds **22** interconnected by links **24**. Each round **22** illustratively includes a bullet **26** received within a casing **28**. Each casing **28** is coupled to an adjacent casing **28** via a link **24**. Links **24** illustratively include a first arcuate engagement member **30** extending in a first direction and a pair of arcuate engagement members **32** extending in a second direction, opposite the first direction of first arcuate engagement member **30**.

Referring to FIG. **5**B, round **22** is illustrated within receiver chamber **18**. During operation of weapon **10**, bullet **26** is expelled or discharged from casing **28** by a firing mechanism (not shown) of weapon **10**. The spent casing **28** and link **24** are thereafter ejected from receiver chamber **18** of weapon **10**. More particularly, casing **28** typically falls downwardly from weapon **10**, while the spent link **24** is ejected outwardly from receiver chamber **18**. More particularly, the spent link **24** is ejected laterally and outwardly from a side of receiver chamber **18** opposite the side of receiver chamber **18** in which ammunition belt **20** is pulled into receiver chamber **18** (FIG. **4**A).

Referring to FIGS. **5**A-**14**, link chute ejection adapter **40** of the present disclosure is configured to receive the spent links **24** of ammunition belt **20** (FIGS. **1** and **2**) and facilitate conveyance of the spent links **24** to a link chute **42** (FIG. **14**). Link chute ejection adapter **40** illustratively includes a lower member or base **44** positioned below an upper member or cover **46**. First side member or wall **48** and second side member or wall **50** are coupled to base **44** and cover **46**. First side member **48** and second side member **50** extend generally in an axial direction from proximal end **52** to distal end **54** in a laterally spaced relation.

With reference to FIGS. **8**, and **10**-**14**, second side wall **50** includes an inner surface **56** having an angled portion **58** extending inwardly toward first side wall **48** as it extends from proximal end **52** toward distal end **54**. In operation, angled portion **58** assists in guiding the spent links **24** (FIG. **2**) toward the link chute **42** (FIG. **15**).

Referring to FIGS. **7** and **8**, base **44**, cover **46**, first side member **48**, and second side member **50** define an ejection chamber **60** extending axially away from weapon **10** (laterally with respect to receiver chamber **18**) along longitudinal axis **62**. Proximal end **52** of link chute adapter **40** is configured to be operably coupled to receiver **12** of weapon **10**, and distal end **54** is configured to be operably coupled to link chute **42** (FIG. **14**).

With reference to FIG. **15**, link chute **42** illustratively includes a plurality of stainless steel guide members **64** pivotally coupled together by connectors **66** for providing flexibility therebetween. Link chute **42** may be of conventional design and is illustratively manufactured by Standard Armament of Glendale, Calif.

With reference to FIGS. **10**, **13** and **14**; first side member **48** and second side member **50** are illustrated as being rigidly fixed, illustratively through welding, to base **44** and cover **46**. Each of base **44**, cover **46**, first side member **48**, and second side member **50** are illustratively formed of a rigid material, such as steel. As such, link chute ejection adapter **40** forms a substantially rigid structure.

Referring to FIGS. **7** and **14**, link chute coupler **65** is illustratively fixed to distal end **54** of link chute ejection adapter **40**. More particularly, link chute coupler **65** is illustratively formed of metal, such as steel, and is welded to base **44**, cover **46**, first side member **48**, and second side member **50**. Link chute coupler **65** may include apertures **67** for threadably receiving screws **69** to secure link chute **42** to link chute ejection adapter **40**.

With further reference to FIGS. **5**B, **13**, and **14**, an arcuate casing stop **68** is supported by proximal end **52** of first side member **48** for locating casing **28** of an ammunition belt **20** (FIG. **2**) within receiver chamber **18**. A bullet stop **70** is supported by proximal end **52** of second side member **50** for locating bullet **26** of an ammunition belt **20** (FIG. **2**) within receiver chamber **18**. Bullet stop **70** illustratively includes a finger **72** extending axially outwardly away from the ejection chamber **60** and transversely outwardly away from an outer surface **74** of second side member **50**. Protrusion **73** extends upwardly at proximal end **52** of second side member **50** and is configured to be engaged by a lower surface **75** of hinged lid **16** when in a lowered position to assist in securing proximal end **52** of link chute ejection adapter **40** within receiver chamber **18**.

With reference to FIGS. **5**A, **8**, **14**, and **15**, base **44** includes a tongue **76** supported at proximal end **52** for mating with

floor **14** of receiver chamber **18** of weapon **10**. More particularly, tongue **76** illustratively is received within a recess **78** defined by floor **14** of receiver chamber **18**. Tongue **76** includes an upper surface **80** configured to be parallel or flush with upper surface **82** of floor **14**. Further, the tongue **76** includes an outer edge **84** configured to be in close proximity to, and illustratively about, edge **86** of recess **78** of floor **14**. As such, tongue **76** reduces potential gaps between floor **14** of receiver **12** and upper surface **80** of tongue **76**, while also reducing elevational differences therebetween. Tongue **76** reduces the likelihood of a spent link **24** being caught or jammed at the interface of receiver **12** and link chute ejection adapter **40**.

With reference to FIGS. **14** and **15**, a mounting boss **88** extends downwardly from lower surface **90** tongue **76** and includes a transversely extending mounting aperture **92**. First and second mounting tabs **94** and **96** extend downwardly from first side member **48** and second side member **50**, respectively. Each of the first and second mounting tabs **94** and **96** include an aperture **98** and **100** axially aligned with mounting aperture **92** of mounting boss **88** of base **44**. A pin **102** (FIG. **5**A) is configured to extend through mounting apertures **92**, **94**, **98** and **100** of base **44**, first side member **48**, second side member **50** for securing link chute ejection adapter **40** to receiver **12** of weapon **10**.

As illustrated in FIGS. **6**A and **7**, cover **46** is configured to reduce gaps between receiver **12** and link chute ejection adapter **40** and thereby reduce the likelihood of catching or jamming spent links **24** (FIG. **5**B) therebetween. Illustratively, cover **46** is positioned no more than about 0.050 inches from feed slide assembly **21** of weapon **10** when feed slide assembly **21** is positioned in its closest proximity to cover **46**.

With reference to FIGS. **16**A and **16**B, link chute ejection adapter **40** is configured to be removably coupled to the left side of weapon **10**. However, link chute ejection adapter **40'** is essentially a mirror image of link chute ejection adapter **40** and configured to be removably coupled to the right side of weapon **10**.

While this invention has been described as having an exemplary design, the present invention may be further modified within the spirit and scope of this disclosure. This application is therefore intended to cover any variations, uses, or adaptations of the invention using its general principles. Further, this application is intended to cover such departures from the present disclosure as come within known or customary practice in the art to which this invention pertains.

The invention claimed is:

1. A link chute ejection adapter for a weapon discharging rounds from an ammunition belt, the link chute ejection adapter comprising:

a base having an upper surface, a lower surface, a proximal end, and a distal end;

a cover positioned above the base;

a first side wall rigidly coupled to the base and the cover, the first side wall including a proximal end configured to be removably received within a receiver chamber of the weapon;

a second side wall positioned in spaced relation to the first side wall and rigidly coupled to the base and the cover, the second side wall including a proximal end configured to be removably received within the receiver chamber of the weapon;

an ejection chamber defined by the base, the cover, the first side wall, and the second side wall, the ejection chamber extending in an axial direction generally along a longitudinal axis from a proximal end to a distal end, the proximal end coupled to the receiver chamber of the weapon and the distal end configured to be coupled to an ejection chute;

a casing stop supported by the proximal end of the first side wall for locating a casing of the ammunition belt; and

a bullet stop supported by the proximal end of the second side wall for locating a bullet of the ammunition belt, the bullet stop including a finger extending axially outwardly away from the ejection chamber and transversely outwardly away from an outer surface of the second side wall.

2. The link chute ejection adapter of claim **1**, wherein the second side wall further includes an inner surface angled relative to the first side wall to guide spent links of the ammunition belt from the receiver chamber in a direction from the proximal end toward the distal end of the ejection chamber.

3. The link chute ejection adapter of claim **1**, wherein the proximal end of the second side wall further comprises an upwardly extending protrusion configured to be engaged by the receiver lid of the weapon.

4. The link chute ejection adapter of claim **1**, wherein the bullet stop is integral with the second side wall.

5. The link chute ejection adapter of claim **1**, further comprising a chute coupler supported at the distal ends of the first and second side walls and configured to couple with an ejection chute.

6. The link chute ejection adapter of claim **1**, further comprising a mounting boss extending downwardly from the base and including an opening for receiving a pin for securing to the weapon.

7. The link chute ejection adapter of claim **6**, further comprising a first mounting tab extending downwardly from the first side wall and including an opening, and a second mounting tab extending downwardly from the second side wall and including an opening, the openings of the first and second mounting tabs aligned with the opening of the mounting boss for receiving the pin.

8. The link chute ejection adapter of claim **1**, wherein the proximal end of the upper surface of the base defines a tongue that is received within the receiver chamber of the weapon and is substantially flush with a floor of the receiver chamber of the weapon.

9. The link chute ejection adapter of claim **1**, wherein the cover is spaced no more than 0.050 inches from a feed slide assembly of the weapon.

10. A link chute ejection adapter for a weapon configured to discharge rounds of ammunition from an ammunition belt in which the rounds of ammunition are connected by links, the link chute ejection adapter comprising:

a base including a proximal end and a distal end, the base further including a tongue supported at the proximal end for mating with a floor of a receiver chamber of the weapon, and a mounting boss extending downwardly from the tongue and having an opening configured to receive a pin for securing the link chute ejection adapter to the weapon;

a cover positioned above the base;

a first side wall coupled to the base and the cover, the first side wall including a proximal end configured to be removably received within a receiver chamber of the weapon;

a second side wall positioned in spaced relation to the first side wall and coupled to the base and the cover, the second side wall including a proximal end configured to be removably received within the receiver chamber of the weapon;

a link chute coupler supported at the distal end of the base and configured to couple a link chute to the link chute ejection adapter;

a casing stop supported by the proximal end of the first side wall for locating a casing of the round; and

a bullet stop supported by the proximal end of the second side wall for locating a bullet of the round, the bullet stop including a finger extending axially outwardly away from the receiver chamber of the weapon and transversely outwardly away from an outer surface of the second side wall.

11. The link chute ejection adapter of claim **10**, wherein the bullet stop is integral with the second side wall.

12. A weapon system comprising:

an ammunition belt including a plurality of rounds interconnected by a plurality of links, wherein each of the plurality of rounds includes a bullet and a casing;

a weapon including a receiver for receiving a round of the ammunition belt, the receiver having a receiver floor, a movable lid, and a feed slide assembly for pulling the ammunition belt across the receiver floor;

a link chute ejection adapter including a base, a cover, a first side wall having a proximal end and a distal end, a second side wall having a proximal end and a distal end, and a chute coupler supported proximate the distal end of the first side wall and the second side wall;

wherein the base includes a mounting boss for coupling the link chute ejection adapter to the weapon, and a tongue having an upper surface and abutting a side edge of the receiver floor such that the upper surface is substantially flush with the receiver floor;

a link chute coupled to the chute coupler of the link chute ejection adapter;

a casing stop supported by the proximal end of the first side wall for locating a casing of the round; and

a bullet stop supported by the proximal end of the second side wall for locating a bullet of the round.

13. The weapon system of claim **12**, wherein the bullet stop includes a finger extending axially outwardly and transversely outwardly away from the second side wall.

14. A method of ejecting spent links from a weapon system, the method including the steps of:

aligning a link ejection chute adapter to a receiver of a weapon such that a tongue at the proximal end of the link chute ejection adapter is substantially flush with a receiving floor of the receiver;

coupling the link chute ejection adapter to the receiver;

coupling a link chute to a distal end of the link ejection chute adapter;

drawing an ammunition belt into a receiver chamber of the weapon, the ammunition belt including rounds of ammunition connected by links, each of the rounds including a bullet and a casing;

locating a casing of the ammunition when the round is drawn into the receiver chamber of the weapon by a casing stop member supported at a proximal end of a first side wall of the link ejection chute adapter;

locating a bullet of the ammunition when the round is drawn into the receiver chamber of the weapon by a bullet stop member supported at the proximal end of a second side wall of the link ejection chute adapter;

expelling the bullet from the casing, wherein the bullet is expelled from the casing by activation of a firing mechanism of the weapon;

ejecting the casing from the receiver chamber, wherein the casing is ejected downwardly from the weapon following the expelling of the bullet from the casing;

ejecting the link from the receiver chamber, wherein the link is ejected laterally from the receiver chamber; and

guiding the link into the link ejection chute adapter.

15. The method of claim **14**, further comprising the step of guiding the link from the receiver chamber into the link ejection chute adapter by the second side wall which includes an inner surface angled relative to the first side wall.

16. The method of claim **14**, wherein the step of coupling the link chute ejection adapter to the receiver comprises passing a pin through a mounting boss extending downwardly from the tongue.

17. The method of claim **16**, wherein a protrusion extends upwardly from the link chute ejection adapter and is configured to be engaged by a movable lid of the weapon.

* * * * *