Naval Surface Warfare Center (NAVSEA) Crane Division

Method and System for Detecting Leakage of Energy Storage Structure Liquid (MSDLESSL)

(US Patent App.12/023,218)

Mini Market Study Report

August 2011

Sponsored by:

Integrated Technology Transfer Network, California State University San Bernardino

Prepared by
NAVSEA Crane – Business Consultant/ ITTN Fellow
Nitrecus Simmons, Business Consultant
Lina Ramos, ITTN Mentor
Kaare Holm, ITTN Mentor

Distribution Statement A: Approved for Public Release; Distribution is Unlimited

MARKET STUDY REPORT

Technology Synopsis

In 2006-2007 the Energy and Power Division of the Naval Surface Warfare Center experienced battery leakage from several of the Navy's major aircrafts, causing expensive repairs and presenting a potential flight risk to the aircrafts involved. The need to address this problem was fulfilled by the creation of a novel method and system, which detected leakage of the battery's energy storage liquid.

The MSDLESSL is an effective, fast, simple, and potentially automated system use to detect electrolyte leakage from lead-acid batteries. It is designed to check liquid leakage for batteries with nonconductive cases, while simultaneously avoiding or minimizing contamination of the immediate environment. The ability to detect electrolyte leakage helps avoid the use of a defective battery, pre-empts pollution of the immediate environment, and prevents corrosion to the battery and its compartments. Also, the electrolyte leakage detection system reduces hazards to personnel. This technology is potentially beneficial to consumer markets (batteries in cars, boats, trucks, and aircrafts), computer server farms, telecommunications battery banks, shop maintainers, lead-acid battery manufacturers, and commercial fleet owners.

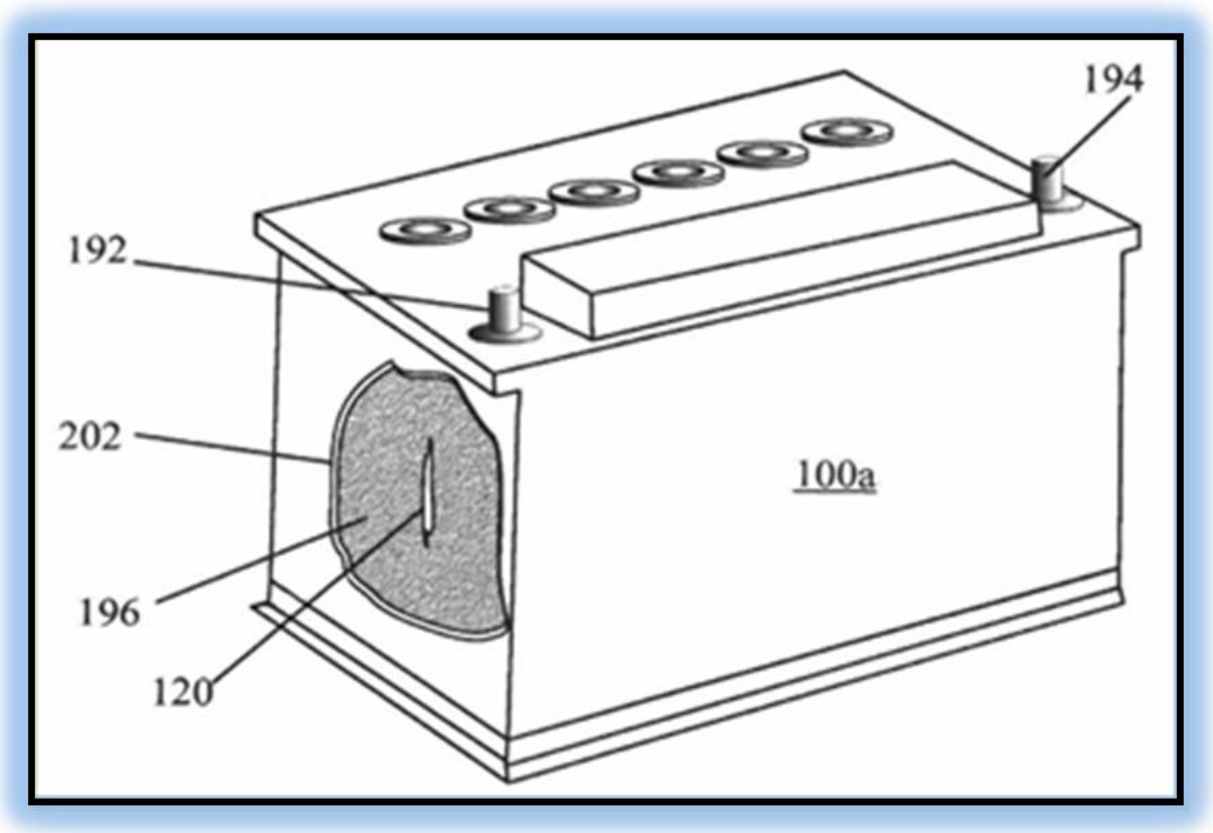

Potential Applications

Industry Segments	Applications	Uses	Size of market
A. *Military B. Commercial	**1. Vehicular** • **Aircrafts** • Automobiles • Marine • Tanks • Trucks 2. Fluid containment devices (tanks)	1. Detecting Electrolyte Leakage from Batteries with nonconductive cases 2. Eliminating poor performers out of critical applications 3. Preventing damage to battery compartments	$33B Military Aircraft (2011)[1]

****Primary Market Focus***

Source:

1. http://annualreport2009.gkn.com/Business_Review/Review_of_Performance/Aerospace_Performance/Default.aspx?id=86

Competing Technologies

Company Name/Inventor	Product Name	Location	Features
NTT Facilities Inc.	VRLA battery remote management system	Tokyo, Japan	• Automatically measures voltage and ambient temperature of each cell • Reports time for battery replacement • Electrolyte leakage detection externally
Lineage Power	Acid Spill Management System	Plano, Texas	• Eliminate corrosion damage • Reduce the time required to effectively clean batteries • Eliminate trickle self-discharge by making the case neutral and non-conductive. • Detect leaks by color change when acids or acid salts are present.
Sue Waggoner	Method and System for Detecting Leakage of Energy Structure Liquid	Crane, Indiana	• Eliminate corrosion damage • Able to detect internal leakage by using internal components • Cost effective to manufacturers

Competitive Advantage

The competitive advantage that Navy's electrolyte detecting system has over the current technologies in the market is that currently there is not any other detection system for a battery with a plastic case that is able to detect leakage internally. This detection system is easy to manufacture, is cost effective for manufacturers and can be automated or checked with a multi-meter. Having this system in place will decrease turnover of batteries and prevent the usage of unacceptable batteries. This technology serves as a warning and test system for end-users to detect battery leakage early.

Market Size

The global market for Lead Acid Batteries is forecast to reach US$15.4 billion by the year 2015, charged by sustained demand from automobiles industry, specifically the replacement market. Emergence of next-generation electric vehicles (EVs) and hybrid electric vehicles (HEVs) will further drive the market.[1] According to 2009 GKN Annual report, the military aircrafts market is estimated to be $33 billion dollars in 2011. Although, this amount is for the aircraft only, a small percentage of the total market is allocated to the batteries used in these aircrafts.[2]

[1] http://www.prweb.com/releases/lead_acid_batteries/automotive_batteries/prweb4646224.htm
[2] http://annualreport2009.gkn.com/Business_Review/Review_of_Performance/Aerospace_Performance/Default.aspx?id=86

Distribution Statement A: Approved for Public Release; Distribution is Unlimited

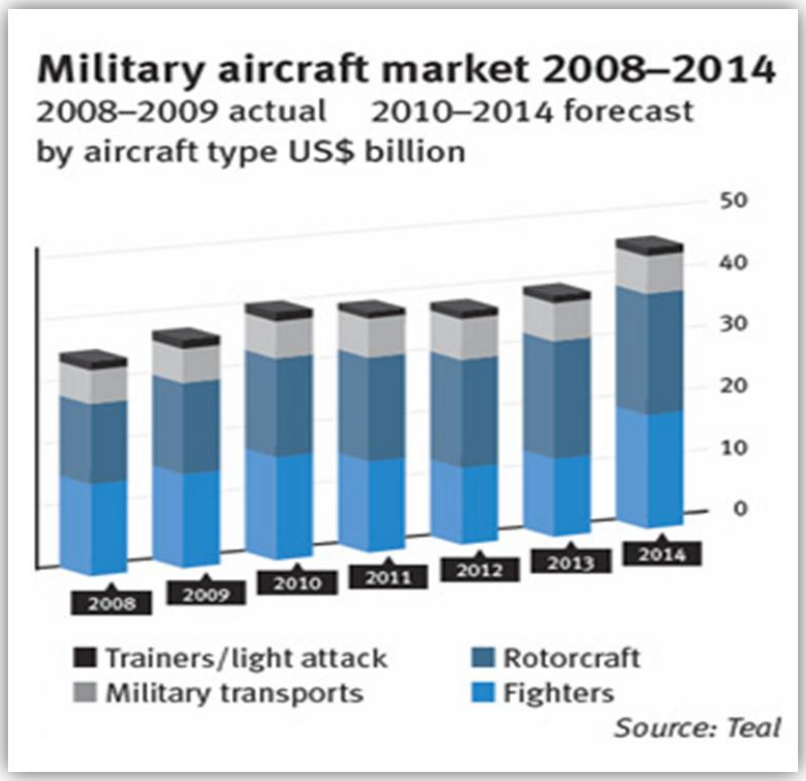

****Note: Military aircrafts use lead acid batteries.**

The market opportunities within the lead acid battery market are large and growing. Lead-acid will account for half the demand of rechargeables. This battery is mainly used for automotive and stand-by applications. Because of the low cost and dependable service in adverse environmental conditions, lead-acid will enjoy a steady increase through to the year 2012.[3]

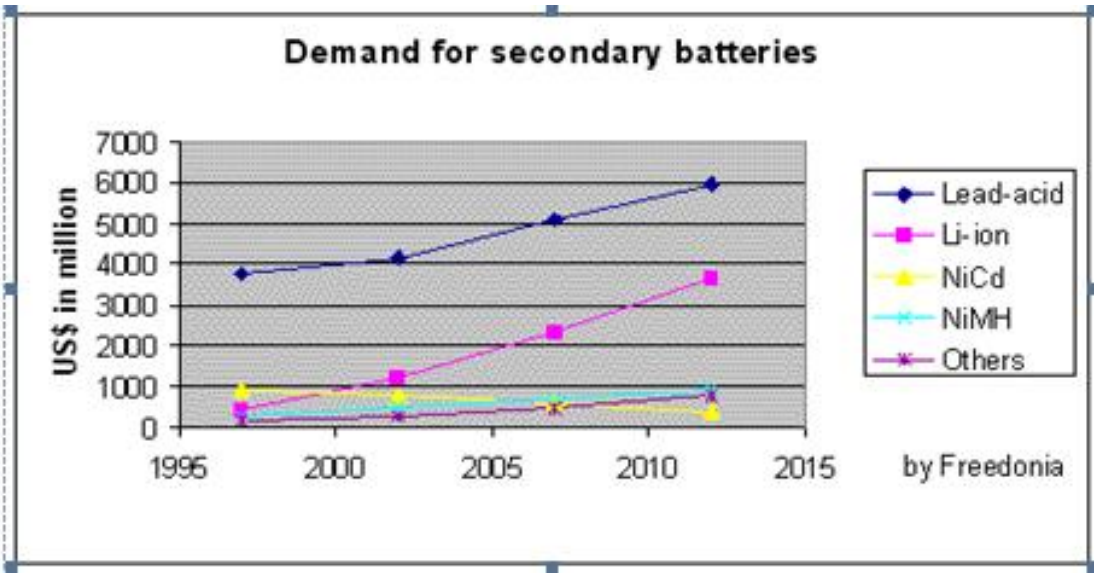

The diagram to the left illustrates an increase in the demand of lead-acid batteries.

Market Opportunity

Many lead-acid batteries when damage leak electrolytes, the damage to these batteries are caused by cracked cells or monoblocks, which result in electrolytes leaking through the wall into the battery

[3] http://batteryuniversity.com/learn/article/battery_statistics

case. Also, if the battery is overcharged electrolytes can spew out of the cells or monoblocks. Finally, vibrations, shocks, and dropping the battery can damage the battery beyond repair. According to PulseTech Products Corporation, "thousands" of lead acid batteries are needlessly disposed and potentially recycled every year, adding to an already unhealthy situation.[4] Throwing away lead acid batteries as a result of damage can lead to hazardous effects including corrosion, contamination, and pollution of the surrounding environment. [5]

Therefore, there is a need in the lead acid battery market for a technology that effectively detects leakage of electrolytes (energy storage). In detecting leakage early assists in determining whether a battery is suitable for use and if it has the potential to fail in the future. By eliminating leaking batteries you also are eliminating batteries with poor or potential unsuitable electrical capacity.

Potential targets for licensing

In regards to licensing this technology, a variety of major players must be considered, more specifically lead acid battery manufacturers including but not limited to **EnerSys®, Johnson Controls, Exide Technologies and East Penn Manufacturing Company**. All of the manufacturers mentioned have well positioned themselves in the market and have earned credibility as the leading lead acid battery manufacturers in the world.

EnerSys, is the largest industrial battery manufacturer in the world, operating manufacturing and assembly facilities worldwide for customers in over 100 countries.

Johnson Controls, a global diversified technology and industrial leader that creates quality products, services and solutions to optimize energy and operational efficiencies of buildings; lead-acid automotive batteries and advanced batteries for hybrid and electric vehicles; and interior systems for automobiles.

Exide Technologies, is one of the world's largest producers and recyclers of lead-acid batteries.

East Penn, the world's largest and most modern independent battery manufacturer.

Keys to Commercialization

The key to commercializing this innovation is to contact **leading lead-acid battery manufacturers to determine interest in electrolyte leakage detection system for military applications, specifically military aircrafts.**

1. **Contact EnerySys' Scott Lichte (Technical Product Manager)** to familiarize him with the MSDLESSL technology, its capabilities, and the problem that it solves for the customers. Afterwards, determine if there is a need in the company, how the technology can be potentially integrated, and a list of other possible companies that would be interested in the technology.

– **Phone:** 660-429-7556

– **Email:** scott.lichte@enersys.com

[4] http://www.automobilemag.com/green/news/0907_xtreme_charger_extends_life_of_lead_acid_batteries/index.html
[5] 1_Showcase_98151_waggoner_final.pdf

2. **Follow-up with Lou Vondenbosch** from East Penn Manufacturing Company to determine whether the company's engineers have reviewed the patent information and to determine if integration of the electrolyte leakage detection system is feasible. Ask for a list of companies who would be interested in integrating this technology.

– **Email:** louv@dekabatteries.com

3. Explore market opportunity within the commercial industry. (Focus: Commercial vehicles and aircrafts that use lead acid batteries)

– **Attend the Advance Automotive Battery Conference**

  - This conference exhibits dynamic networking events, symposiums, tutorials that address the key issues affecting the technology and market of advanced vehicles and the batteries that will power them.
  - **February 6-10, 2012 in Orlando, Florida.**

– **Attend the National Alliance for Advanced Technology Batteries Second Annual Meeting Summit and Conference**

  - This year's theme, "New Markets, New Innovation, this conference will discuss crucial topics facing the U.S. advanced battery industry.
  - **September 7-8, 2011 in Louisville, Kentucky at the Seelbach Hilton**
  - Registration is open now! Register at www.naatbatt.org.
  - **Sponsorship and exhibit opportunities contact:**
    - Jim Greenberger at 312.588.0477 or jgreenberger@naatbatt.org
    - Marty Tullio, McCloud Communications, at 949.632.1900 or marty@mccloudcommunications.com

Appendices

[EnerySys]

Name: Scott Lichte
Position: Technical Product Manager
Phone: 606-429-7556
Email: scott.lichte@enersys.com

Background information: Largest industrial battery manufacturer in the world, operating manufacturing and assembly facilities worldwide for customers in over 100 countries. EnerSys has over 100 years of battery experience.

The primary contact for EnerSys is Scott Lichte. Mr. Lichte has 28 years in battery industry in various functions ranging from QC Chemist, QC Process Engineer, Lab Manager for Materials Testing Lab, Application Engineer, and Technical Product Manager for Aviation and Defense department of EnerSys A&D. He has expertise in the manufacturing/quality/technical and applications side of the battery industry.

Key questions and answers:

Q: What would be the typical process in your company for integrating a new technology?

A: It must be deemed commercially feasible and applicable to our products. It then must address a design/performance issue and must be considered reliable. Once it meets those criteria, ideas are developed within our design group with input from sales/marketing. Ultimately it may result in design and/or process changes to implement the improvement.

Q. Is the initial screening for a technology driven by the R&D department/team or by a product manager? Who conducts the rest of the screening to ensure that the new technology can be beneficial not only to the company, but also to the customer?

A: Ideas come from any group, but must be screened by the technical/quality group. Test frequency and validity is coordinated within the tech/quality groups.

Q. To your knowledge has EnerSys ever licensed a technology to help improve existing products or as an addition to the product line?

A: I'm sure we have as EnerSys is the world's largest industrial battery manufacturer with plants in many countries with many types of products.

Q: If EnerSys were to license a technology such as the MSDLESSL, how would you go about doing so? Who is the contact person for licensing?

A: You can start with me as POC.

Q: If EnerSys were to license the MSDLESSL, what specific characteristics or features must it have?

A: Please see A to first Q. Obviously, accuracy and reliability are key to assuring a valid test. Ease of testing and cost of testing is also a consideration.

Q: Do you see a need for the MSDLESSL in the lead acid battery market? Is there a need in your company? If so where is the need?

A: I have not been familiarized with the mentioned test; however EnerSys has multiple types of such detection techniques within our company and in the field.

Q: What role can we expect EnerSys to play in shaping the future of the lead acid battery market?

A: Large

Q: Is there any other insight or information that you could provide on the lead acid battery market and/or leakage detection equipment that would beneficial to this market study?

A: Various leakage detection tests must surely be already available in the various markets which have been mentioned above. We have nothing to add at this time.