US008420977B2

(12) **United States Patent**
Bradley et al.

(10) **Patent No.: US 8,420,977 B2**
(45) **Date of Patent: Apr. 16, 2013**

(54) **HIGH POWER LASER SYSTEM**

(75) Inventors: **Timothy Bradley**, Loogootee, IN (US); **Eric Hillenbrand**, Evansville, IN (US)

(73) Assignee: **United States of America as represented by the Secretary of the Navy**, Washington, DC (US)

(*) Notice: Subject to any disclaimer, the term of this patent is extended or adjusted under 35 U.S.C. 154(b) by 284 days.

(21) Appl. No.: **12/778,643**

(22) Filed: **May 12, 2010**

(65) **Prior Publication Data**

US 2012/0101658 A1 Apr. 26, 2012

Related U.S. Application Data

(63) Continuation-in-part of application No. 12/541,772, filed on Aug. 14, 2009, now Pat. No. 8,305,252, and a continuation-in-part of application No. 12/511,056, filed on Jul. 28, 2009.

(51) **Int. Cl.**
B23K 26/14 (2006.01)
B23K 26/16 (2006.01)

(52) **U.S. Cl.**
USPC **219/121.67**

(58) **Field of Classification Search** 219/121.72, 219/121.67
See application file for complete search history.

(56) **References Cited**

U.S. PATENT DOCUMENTS

3,392,259	A	7/1968	Meier
3,622,743	A	11/1971	Muncheryan
4,177,580	A	12/1979	Marshall et al.
4,575,786	A	3/1986	Roberts
4,580,557	A	4/1986	Hertzmann
4,838,167	A	6/1989	Prahauser et al.
5,198,607	A	3/1993	Livingston et al.
5,272,716	A	12/1993	Soltz et al.
5,319,434	A	6/1994	Croteau et al.
5,339,328	A	8/1994	Miura
5,396,506	A	3/1995	Ball

(Continued)

FOREIGN PATENT DOCUMENTS

WO	WO 99/07439	2/1999
WO	WO 2006/031351	3/2006

OTHER PUBLICATIONS

Galvanauskas et al., "KW-Power Fiber Lasers with Single Transverse Mode Output," Sep. 22, 2005, 5 pgs., downloaded from http://www.nufern.com/whitepaper_detail.php/30.

(Continued)

Primary Examiner — William D Coleman
(74) *Attorney, Agent, or Firm* — Christopher A. Monsey

(57) **ABSTRACT**

A modulation device for directing a mobile tracking device away from an asset is provided. The modulation device includes a continuous wave laser source whose output is directed at a seeker head of the mobile tracking device. The modulation device causes the generation of localized sources within the mobile tracking device and confuses the mobile tracking device as to the true location of the asset. A portable cutting device is disclosed. The portable cutting device may include a portable power supply and a laser source. The portable power supply and laser source of the portable cutting device may be positioned within a backpack and carried by a user. A handheld unit which is coupled to the laser source may be supported by the hands of the operator. The handheld unit provides power generated by the laser source to a barrier to be cut.

6 Claims, 33 Drawing Sheets

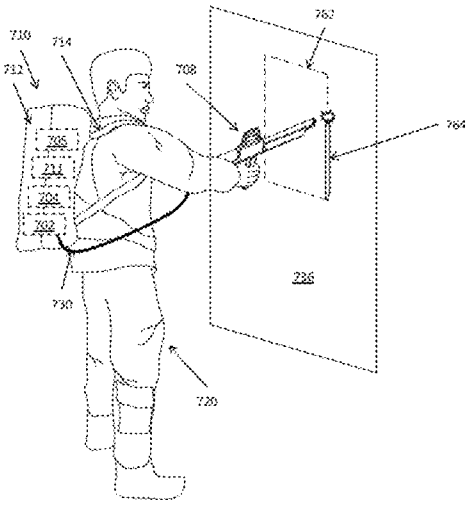

U.S. PATENT DOCUMENTS

5,401,171	A *	3/1995	Paghdiwala	433/215
5,501,680	A	3/1996	Kurtz et al.	
5,549,477	A	8/1996	Tran et al.	
5,574,458	A	11/1996	Tran	
5,600,434	A	2/1997	Warm et al.	
5,635,905	A	6/1997	Blackburn et al.	
5,694,408	A	12/1997	Bott et al.	
5,780,807	A	7/1998	Saunders	
5,793,476	A	8/1998	Laakmann et al.	
5,862,278	A	1/1999	Brauch et al.	
6,167,075	A	12/2000	Craig et al.	
6,187,213	B1	2/2001	Smith et al.	
6,269,617	B1	8/2001	Blanchard	
6,359,710	B1	3/2002	Takken et al.	
6,429,446	B1	8/2002	Labaugh	
6,439,888	B1 *	8/2002	Boutoussov et al.	433/215
6,587,486	B1	7/2003	Sepp et al.	
6,593,540	B1	7/2003	Baker et al.	
6,665,079	B1	12/2003	Tocci et al.	
6,670,222	B1	12/2003	Brodsky	
6,700,094	B1	3/2004	Kuntze	
6,703,582	B2	3/2004	Smart et al.	
6,773,119	B2	8/2004	Kimura et al.	
6,801,550	B1	10/2004	Snell	
6,903,674	B2	6/2005	Hoesel et al.	
6,933,877	B1	8/2005	Halladay et al.	
6,969,845	B2	11/2005	von Rosenberg, Jr.	
6,977,598	B2	12/2005	Longbottom	
7,017,467	B1	3/2006	Monroe	
7,053,812	B2	5/2006	Trainor	
7,154,591	B2	12/2006	Muenter et al.	
7,397,014	B2	7/2008	Hart et al.	
7,425,916	B2	9/2008	Stevens, Jr.	
7,540,227	B2 *	6/2009	McCants Jr.	89/1.819
7,583,715	B2	9/2009	Hill et al.	
7,683,310	B1 *	3/2010	Sinclair et al.	250/216
7,903,704	B2 *	3/2011	Patel et al.	372/29.021
8,202,268	B1	6/2012	Wells et al.	
2002/0190162	A1 *	12/2002	McDonnell	244/170
2005/0104731	A1	5/2005	Park	
2005/0200705	A1	9/2005	Nieto	
2006/0000988	A1 *	1/2006	Stuart et al.	250/504 R
2006/0159440	A1	7/2006	Purkayastha et al.	
2006/0218410	A1	9/2006	Robert et al.	
2007/0034615	A1	2/2007	Kleine	
2007/0169616	A1	7/2007	Vickroy	
2007/0293850	A1 *	12/2007	Stoltz et al.	606/10
2008/0144673	A1	6/2008	Gapontsev	
2009/0091738	A1	4/2009	Morcom	
2009/0092157	A1	4/2009	Gapontsev	
2009/0224958	A1	9/2009	Aphek et al.	
2010/0076475	A1	3/2010	Yates et al.	
2010/0176097	A1	7/2010	Zhu	
2010/0183037	A1 *	7/2010	Furuya et al.	372/6
2011/0024403	A1 *	2/2011	Bradley et al.	219/121.67
2011/0024405	A1 *	2/2011	Bradley et al.	219/121.72
2011/0113949	A1 *	5/2011	Bradley	89/1.11

OTHER PUBLICATIONS

Peavey et al., "Comparison of Cortical Bone Ablations by Using Infrared Laser Wavelengths 2.9 to 9.2 μm," Lasers in Surgery and Medicine, vol. 26, pp. 421-434, 1999.

Valentine, "COTS laser technology targets emerging battlefield threats," RF Design, Nov. 29, 2007, 2 pgs., downloaded on Jun. 27, 2009 from www.printthis.clickabiliyt.com/pt/cpt?action=cpt&title=COTTS+Laser+Technology+.

Waarts et al., "Fiber Lasers at JDS Uniphase," Fiber Lasers: Technology, Systems, and Applications, Proc. of Society of Photo-Opitcal Instrumentation Engineers, 2004, vol. 5335, 12 pgs.

Brown, J.M., "Digital Model of a Generic Infrared Tracker," Thesis in partial fulfillment of requirements for Master of Science in Electrical Engineering, May 1992, cover and pp. i-vii, 1-26, and 66-71 (available in Library of Rose Hulman Institute of Technology), Indiana.

Dornheim, M.A., "Cost of Protection," Aviation Week, 2008, 2 pgs., downloaded from website http://aviationweek.com/aw/generic/story_generic.jsp?channel=awst&id=news/11145p3.xml.

Globalsecurity.Org, "Large Aircraft Infrared Countermeasures (LAIRCM),"3 pgs., downloaded from http://ww.globalsecurity.org/military/systems/aircraft/systems/laircm.htm12/9/2008.

Matthews, W., "New Angle on Missile Defense; U.S. Overcomes Cost Obstacles With UAV-based Infrared Sensor," Defense News, Sep. 29, 2008, 3 pgs., downloaded Dec. 5, 2008 from http://www.defensenews.com/story.php?i=3746183.

Northrop Grumman Corporation, "AN/AAQ-24(V) Nemesis; In Production, Deployed and Tailored to Any Platform," 2 pgs.

Northrop Grumman Corporation, "AN/AAQ-28(V) Litening AT; Low Risk, Next Generation Targeting Pod," 2 pgs.

Northrop Grumman Corporation, "AN/AAR-54(V) Missile Warning System; Available Now for Transport, Fighter and Rotary Wing Aircraft," 2 pgs.

Osborn, K., "Army looks to field laser jammer by 2010," Army Times, May 12, 2007, 2 pgs., downloaded from http://www.armtimes.com/new/2007/05/defense_bae_jammer_070511a/12/5/2008.

Raytheon Company, "Scorpion Aircraft Protection System; Lightweight, Cost-Effective Missile Protection for Tactical Aircraft," 2006, 2 pgs.

Thermotek, Inc., "Solid State Recirculating Chiller T255P," 2 pgs.

"New Technology Aimed at Stopping Movie Piracy", downloaded from www.getthebigpicture.net, Sep. 22, 2009, 2 pgs.

* cited by examiner

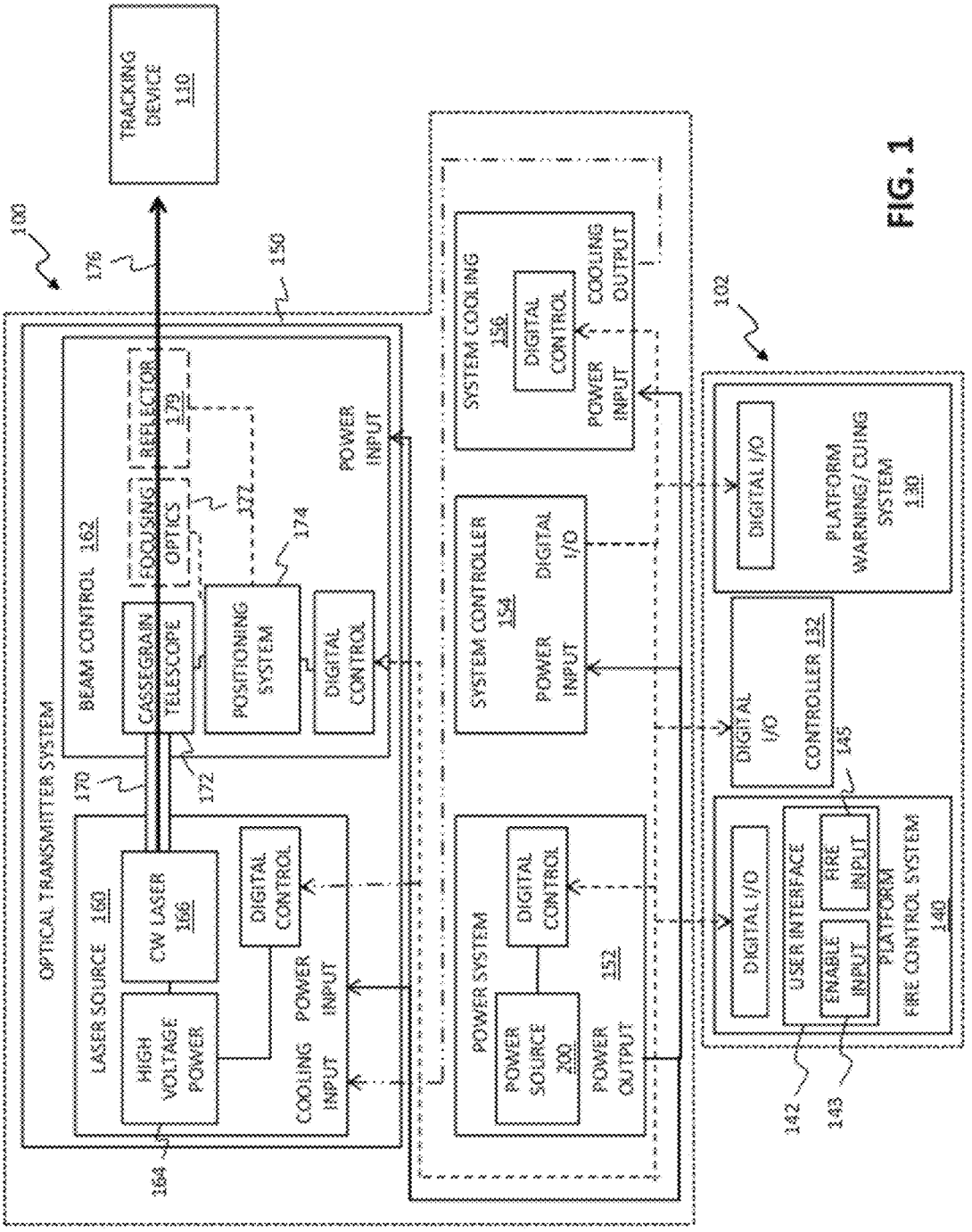
100
TRACKING DEVICE 110
176
150
OPTICAL TRANSMITTER SYSTEM
BEAM CONTROL 162
CASSEGRAIN TELESCOPE
FOCUSING OPTICS
REFLECTOR 178
172
174
POSITIONING SYSTEM
DIGITAL CONTROL
POWER INPUT
170
LASER SOURCE 160
CW LASER 166
HIGH VOLTAGE POWER
DIGITAL CONTROL
COOLING INPUT
POWER INPUT
164
SYSTEM COOLING 156
DIGITAL CONTROL
POWER INPUT
COOLING OUTPUT
SYSTEM CONTROLLER 154
POWER INPUT
DIGITAL I/O
POWER SYSTEM 152
DIGITAL CONTROL
POWER SOURCE 200
POWER OUTPUT
102
DIGITAL I/O
PLATFORM WARNING/ CUING SYSTEM 130
DIGITAL I/O
CONTROLLER 132
145
DIGITAL I/O
USER INTERFACE
ENABLE INPUT
FIRE INPUT
PLATFORM FIRE CONTROL SYSTEM 140
142
143

FIG. 1

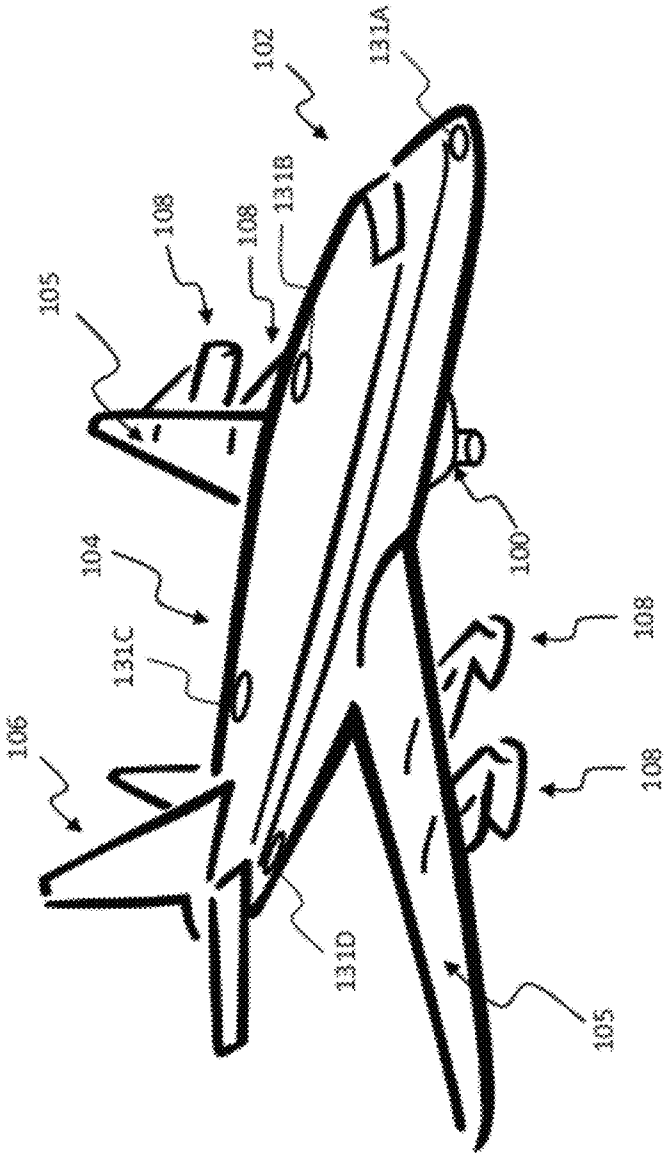

FIG. 2

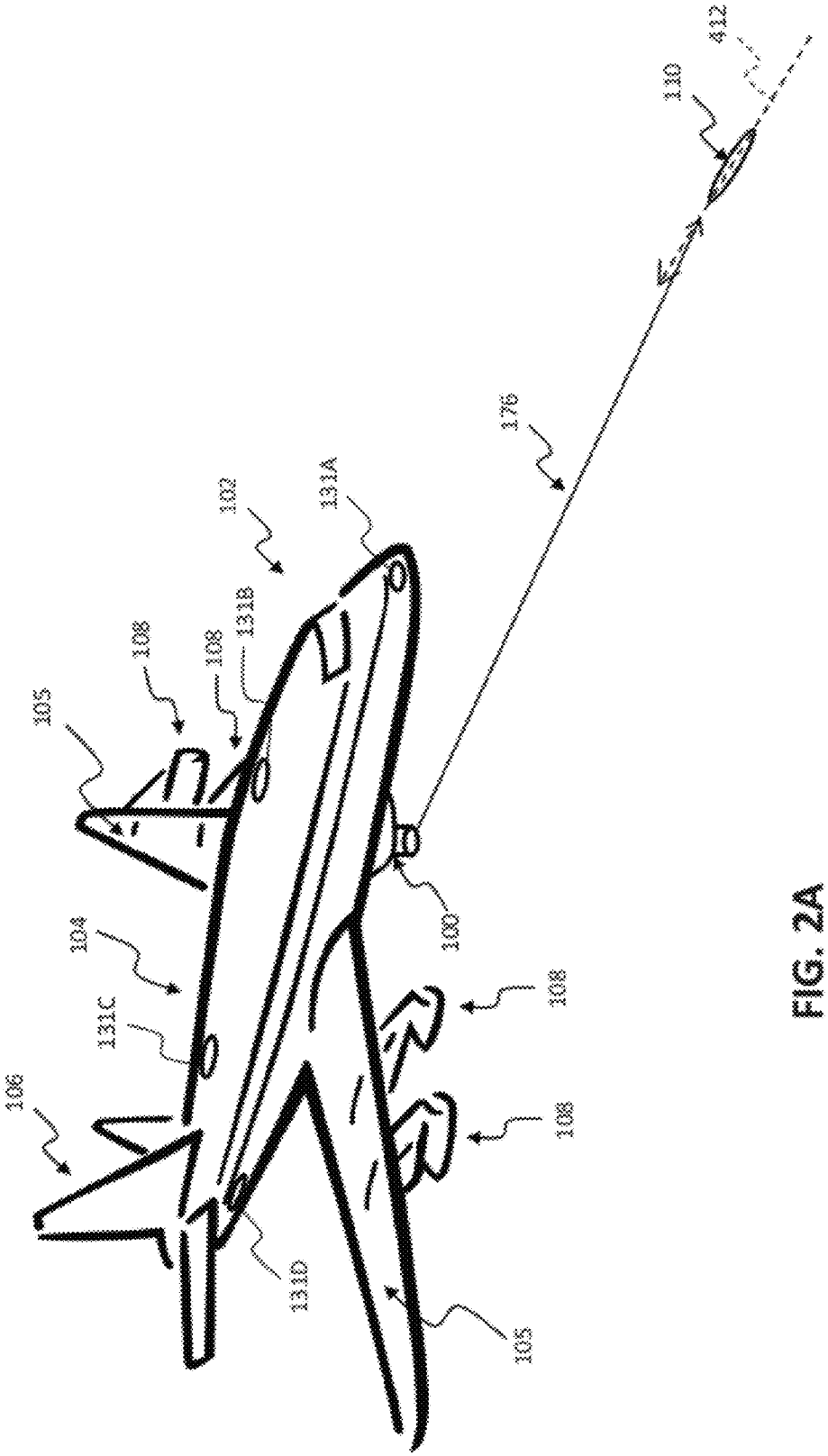
412
110
176
102
131A
131B
108
108
105
104
131C
106
100
108
108
131D
105

FIG. 2A

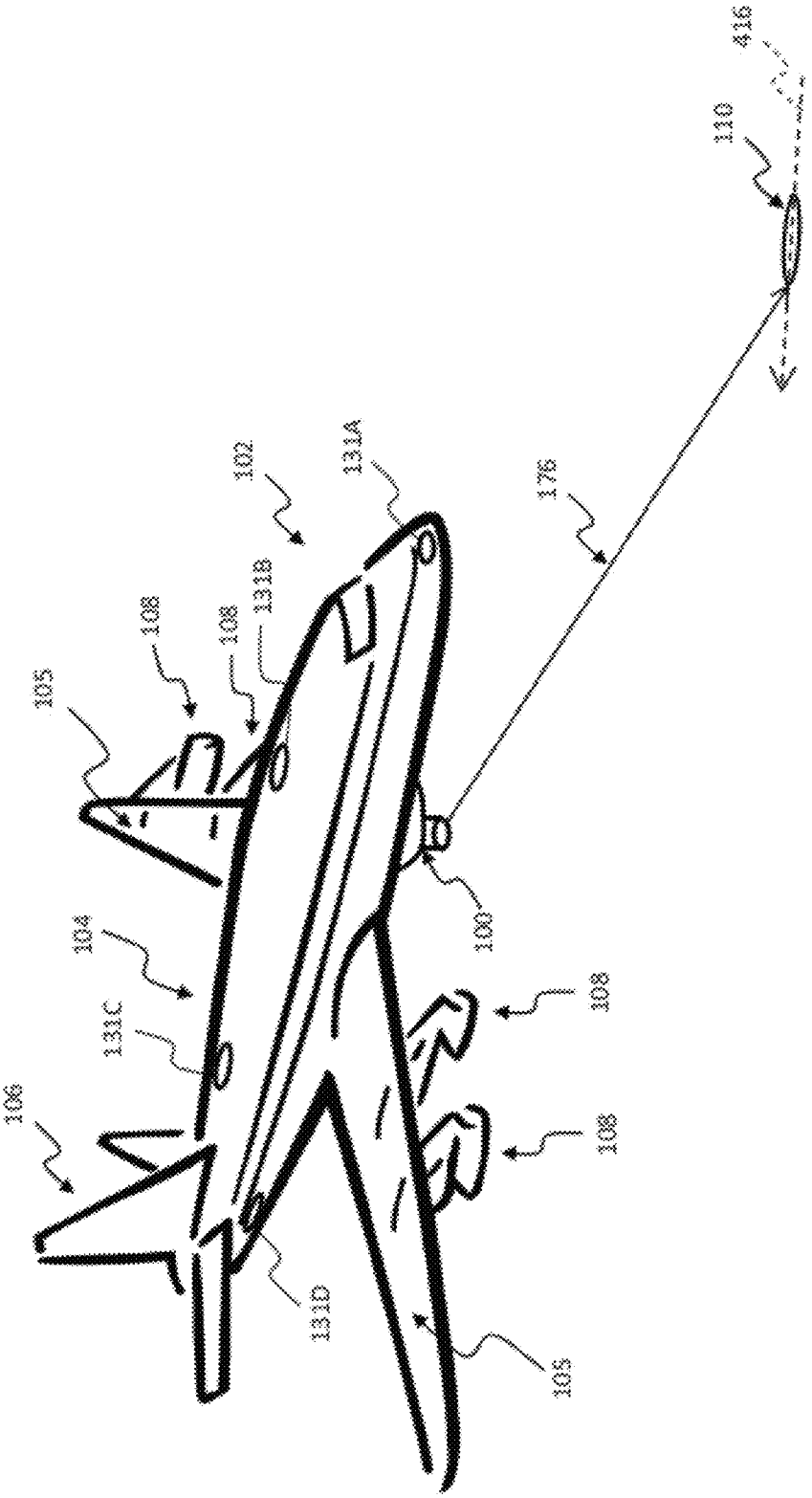
416
110
176
102
131A
131B
108
108
105
104
131C
106
100
108
108
131D
105

FIG. 2B

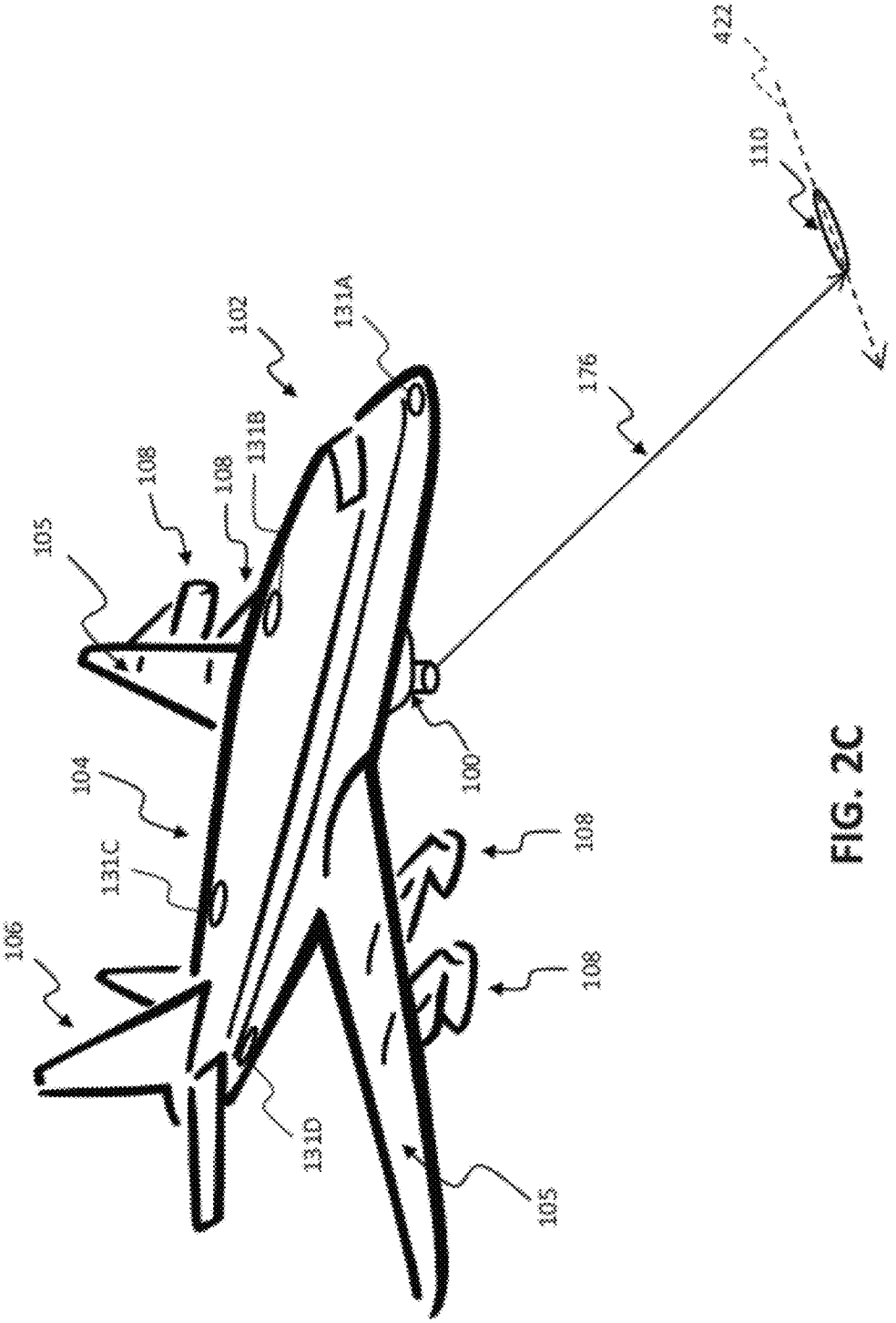
422
110
176
102
131A
131B
108
108
105
104
131C
106
100
108
108
131D
105

FIG. 2C

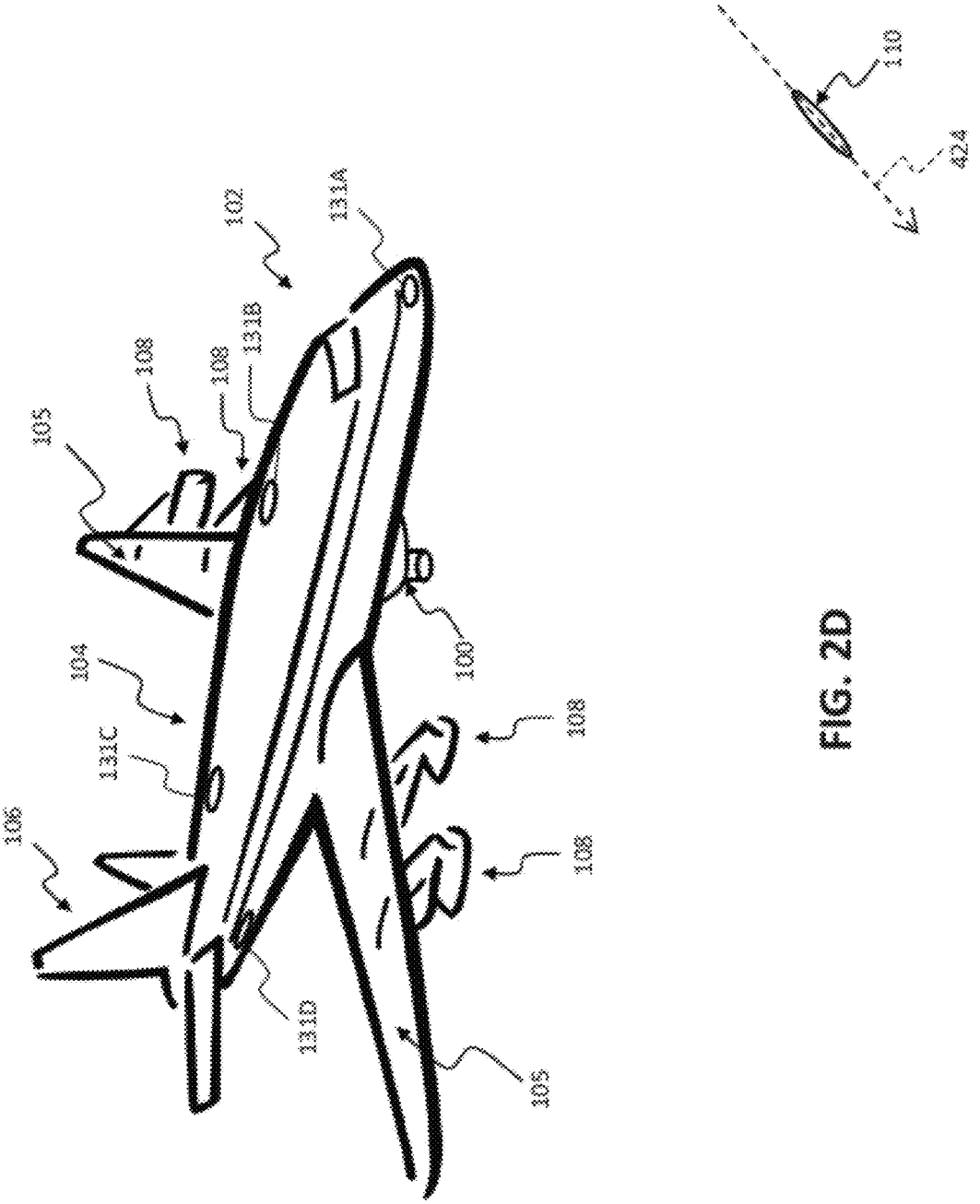
110
424
102
131A
131B
108
108
105
104
131C
106
100
108
108
131D
105

FIG. 2D

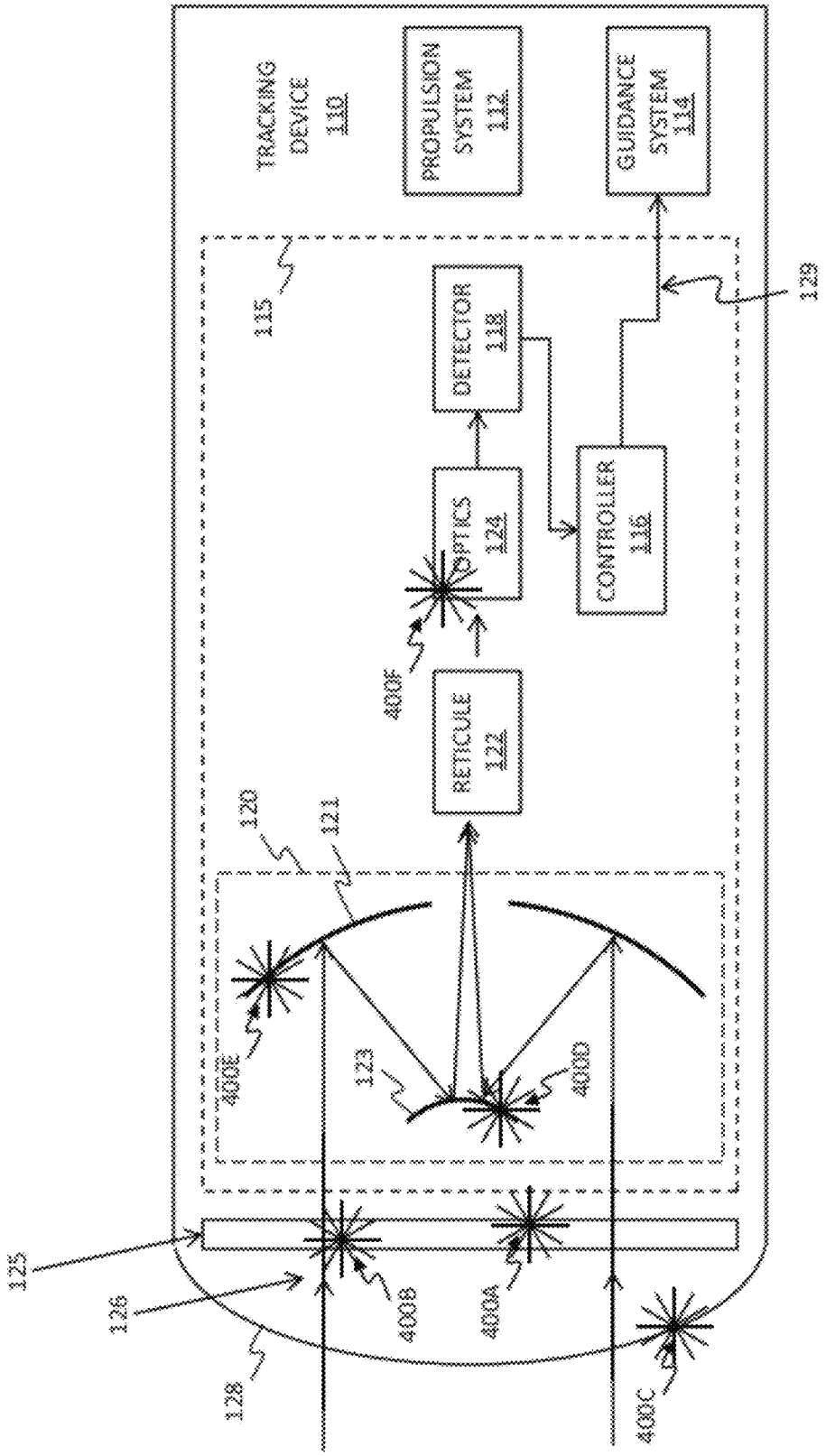
TRACKING DEVICE 110
PROPULSION SYSTEM 112
GUIDANCE SYSTEM 114
115
DETECTOR 118
CONTROLLER 116
OPTICS 124
RETICULE 122
400F
120
121
400E
123
400D
125
126
128
400B
400A
400C
129

FIG. 3

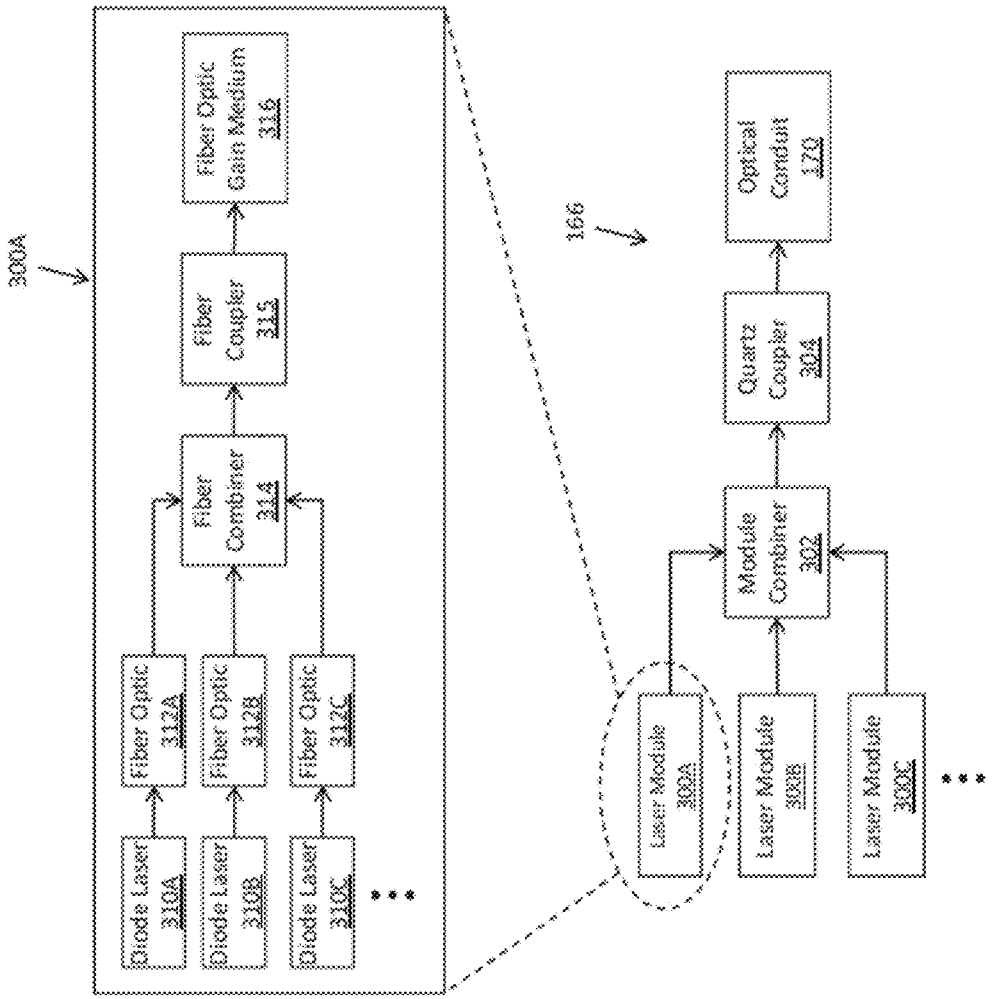
300A
Diode Laser 310A
Diode Laser 310B
Diode Laser 310C
Fiber Optic 312A
Fiber Optic 312B
Fiber Optic 312C
Fiber Combiner 314
Fiber Coupler 315
Fiber Optic Gain Medium 316
166
Laser Module 302A
Laser Module 302B
Laser Module 300C
Module Combiner 302
Quartz Coupler 304
Optical Conduit 170

FIG. 4

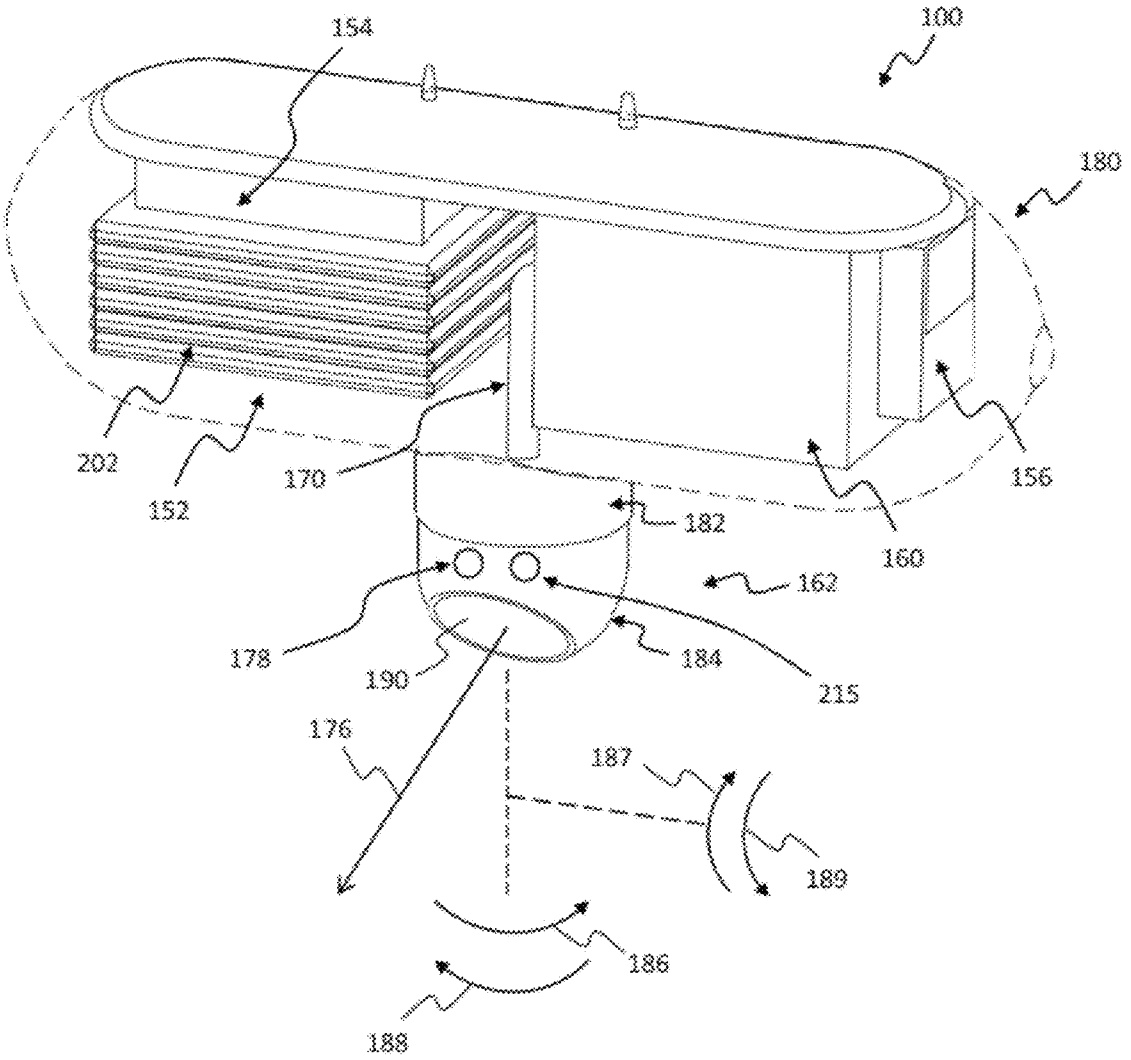
154
100
180
202
152
170
182
160
156
162
178
190
184
215
176
187
189
186
188

FIG. 5

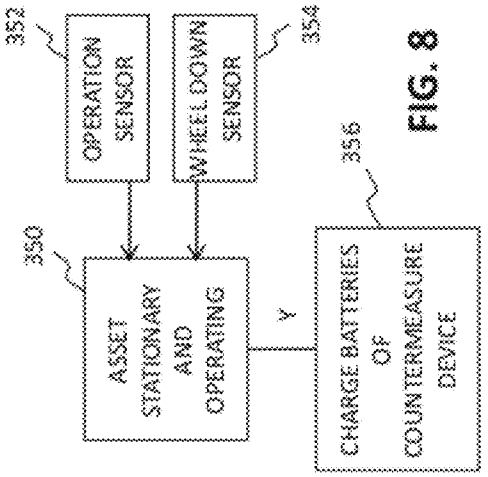
352
OPERATION SENSOR
354
WHEEL DOWN SENSOR
350
ASSET STATIONARY AND OPERATING
Y
356
CHARGE BATTERIES OF COUNTERMEASURE DEVICE

FIG. 8

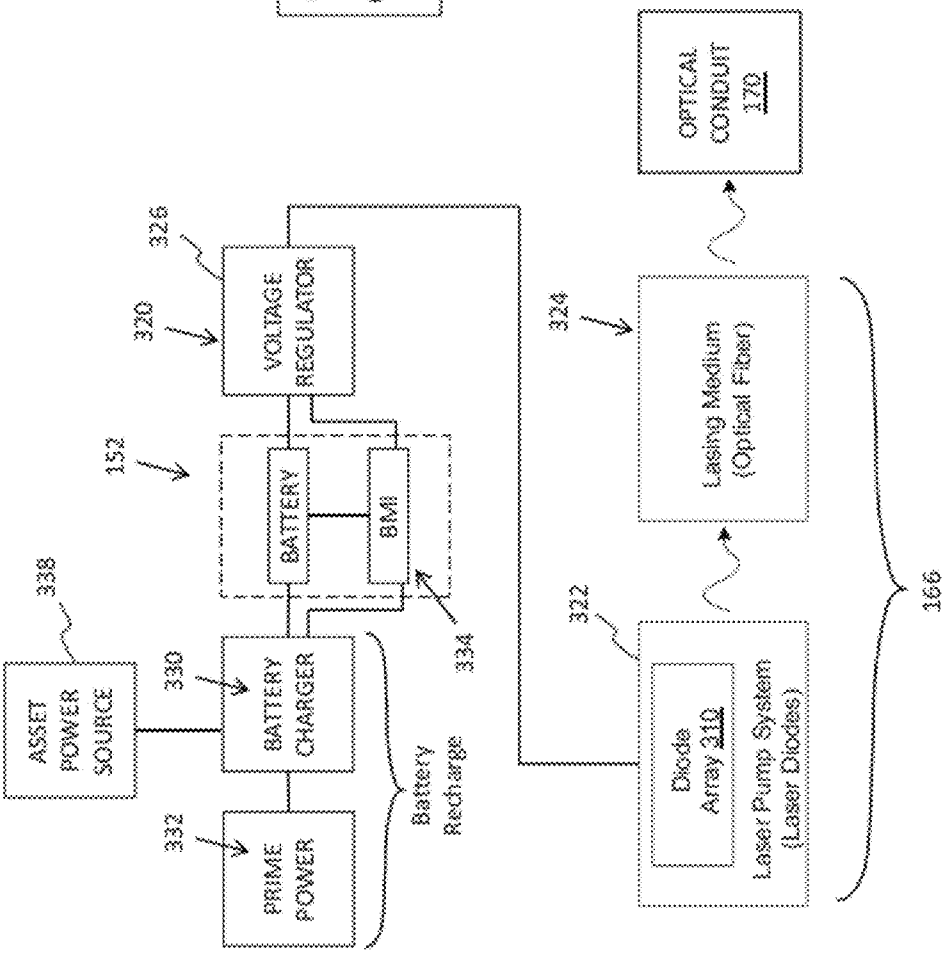
338
ASSET POWER SOURCE
330
BATTERY CHARGER
332
PRIME POWER
Battery Recharge
152
BATTERY
BMI
334
320
326
VOLTAGE REGULATOR
322
Diode Array 210
Laser Pump System (Laser Diodes)
324
Lasing Medium (Optical Fiber)
OPTICAL CONDUIT 170
166

FIG. 6

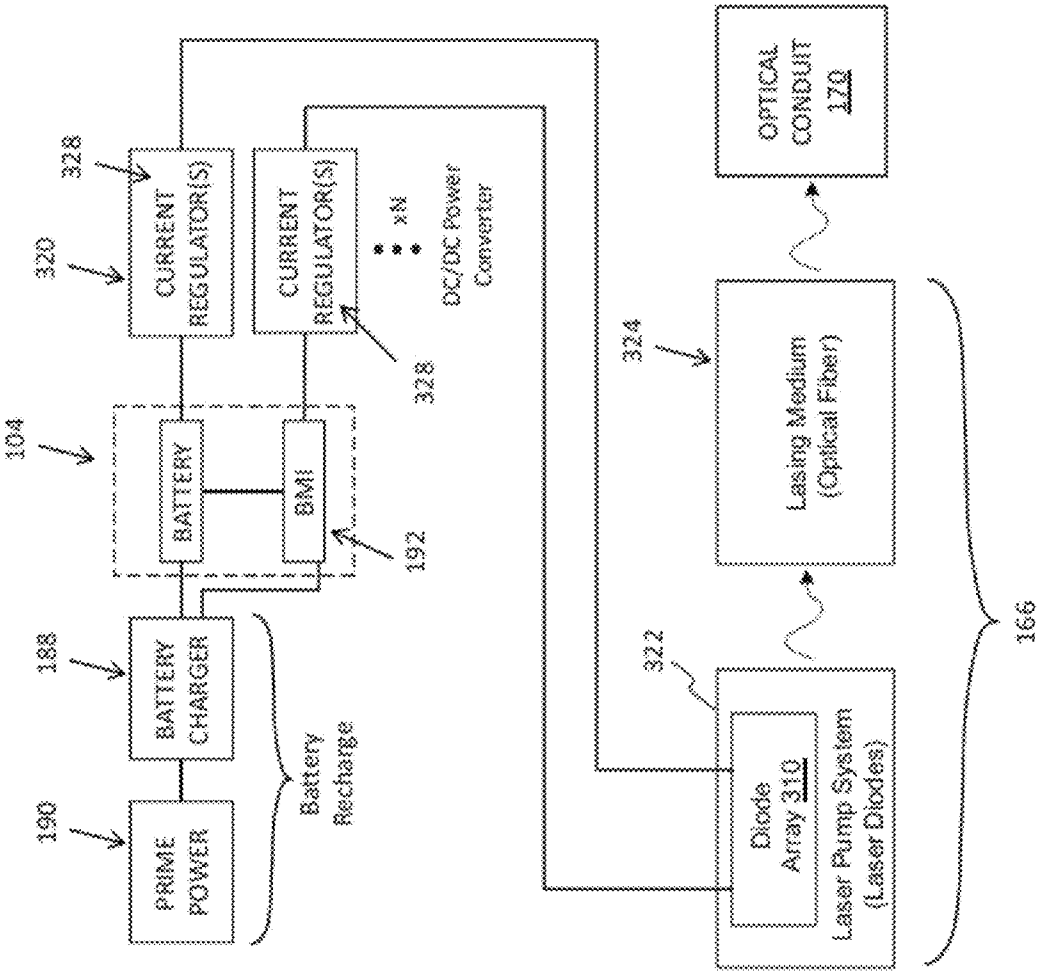
190
PRIME POWER
188
BATTERY CHARGER
Battery Recharge
104
BATTERY
BMI
192
320
CURRENT REGULATOR(S)
328
CURRENT REGULATOR(S)
x N
DC/DC Power Converter
328
322
Diode Array 310
Laser Pump System (Laser Diodes)
324
Lasing Medium (Optical Fiber)
OPTICAL CONDUIT 170
166

FIG. 7

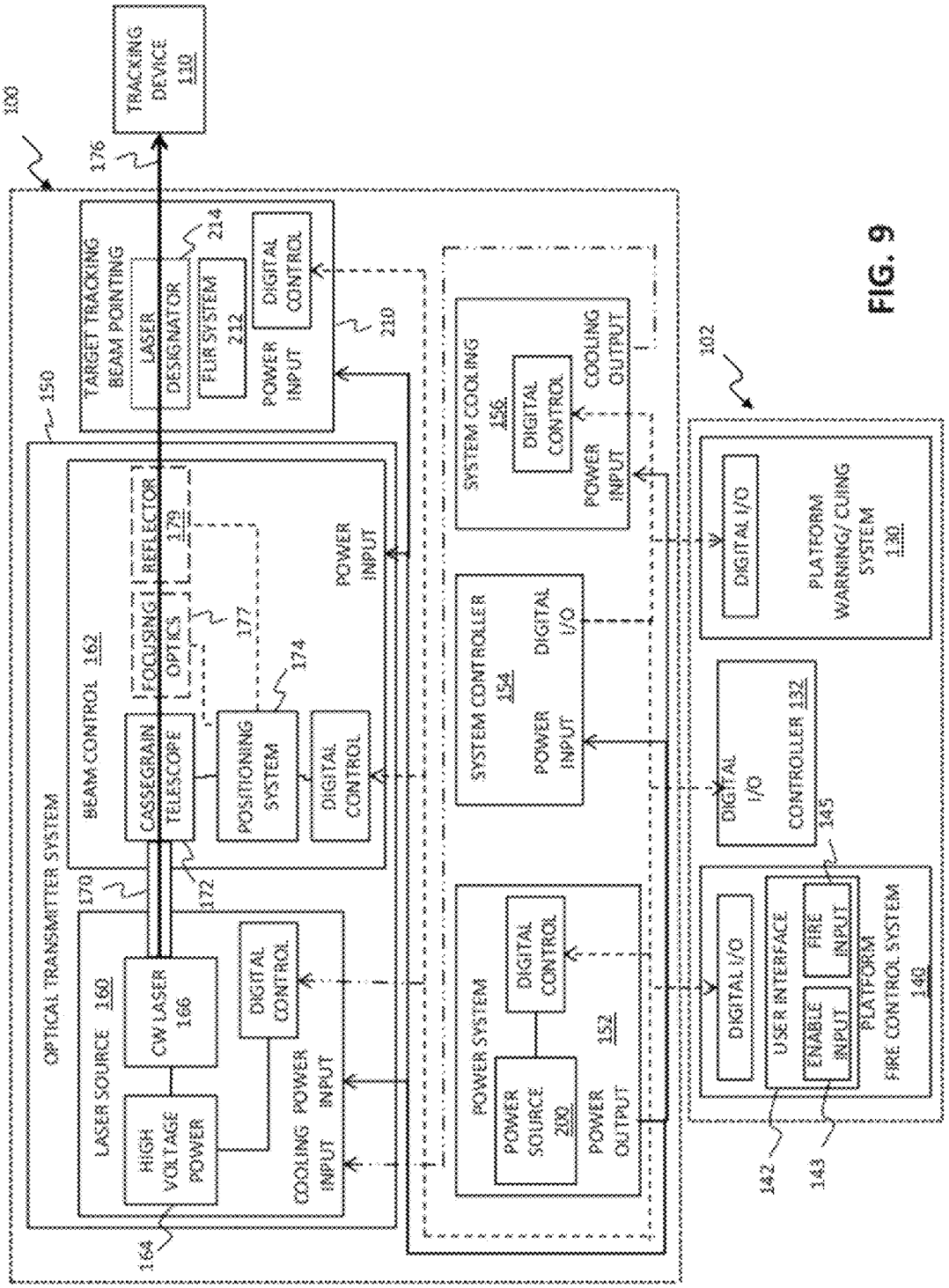
100
TRACKING DEVICE 130
176
TARGET TRACKING BEAM POINTING
LASER
DESIGNATOR
FLIR SYSTEM 212
214
DIGITAL CONTROL
POWER INPUT
210
150
OPTICAL TRANSMITTER SYSTEM
BEAM CONTROL 162
CASSEGRAIN
TELESCOPE
FOCUSING
OPTICS
REFLECTOR
178
177
POSITIONING SYSTEM
174
DIGITAL CONTROL
POWER INPUT
170
172
LASER SOURCE 160
CW LASER 166
HIGH VOLTAGE POWER
164
DIGITAL CONTROL
COOLING INPUT
POWER INPUT
SYSTEM COOLING 156
DIGITAL CONTROL
POWER INPUT
COOLING OUTPUT
SYSTEM CONTROLLER 154
POWER INPUT
DIGITAL I/O
POWER SYSTEM
DIGITAL CONTROL
POWER SOURCE 280
POWER OUTPUT
152
102
DIGITAL I/O
PLATFORM WARNING/ CUING SYSTEM 130
DIGITAL I/O
CONTROLLER 132
145
DIGITAL I/O
USER INTERFACE
ENABLE INPUT
FIRE INPUT
PLATFORM FIRE CONTROL SYSTEM 140
142
143

FIG. 9

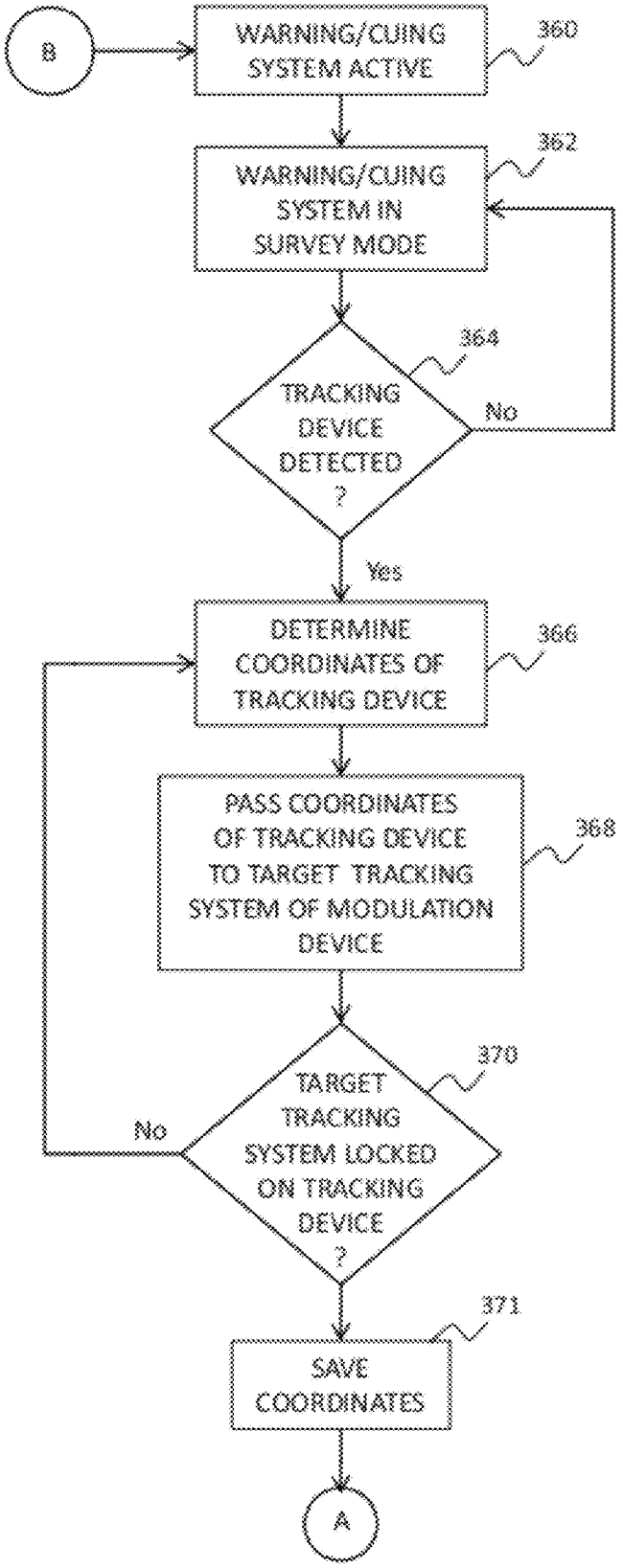
B
WARNING/CUING SYSTEM ACTIVE
360
WARNING/CUING SYSTEM IN SURVEY MODE
362
TRACKING DEVICE DETECTED ?
364
No
Yes
DETERMINE COORDINATES OF TRACKING DEVICE
366
PASS COORDINATES OF TRACKING DEVICE TO TARGET TRACKING SYSTEM OF MODULATION DEVICE
368
TARGET TRACKING SYSTEM LOCKED ON TRACKING DEVICE ?
370
No
SAVE COORDINATES
371
A

FIG. 10A

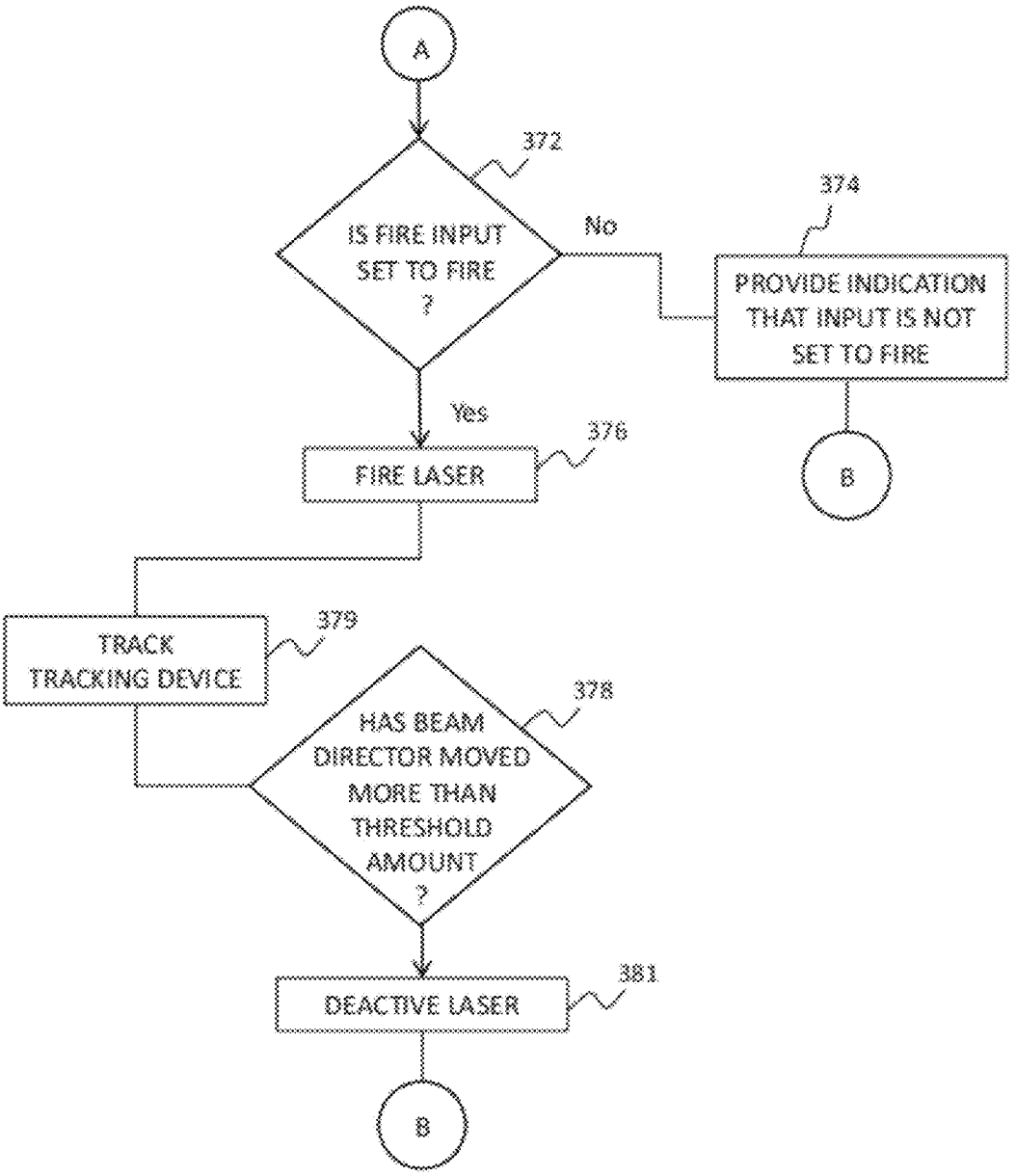
A
372
IS FIRE INPUT SET TO FIRE ?
No
374
PROVIDE INDICATION THAT INPUT IS NOT SET TO FIRE
B
Yes
376
FIRE LASER
379
TRACK TRACKING DEVICE
378
HAS BEAM DIRECTOR MOVED MORE THAN THRESHOLD AMOUNT ?
381
DEACTIVE LASER
B

FIG. 10B

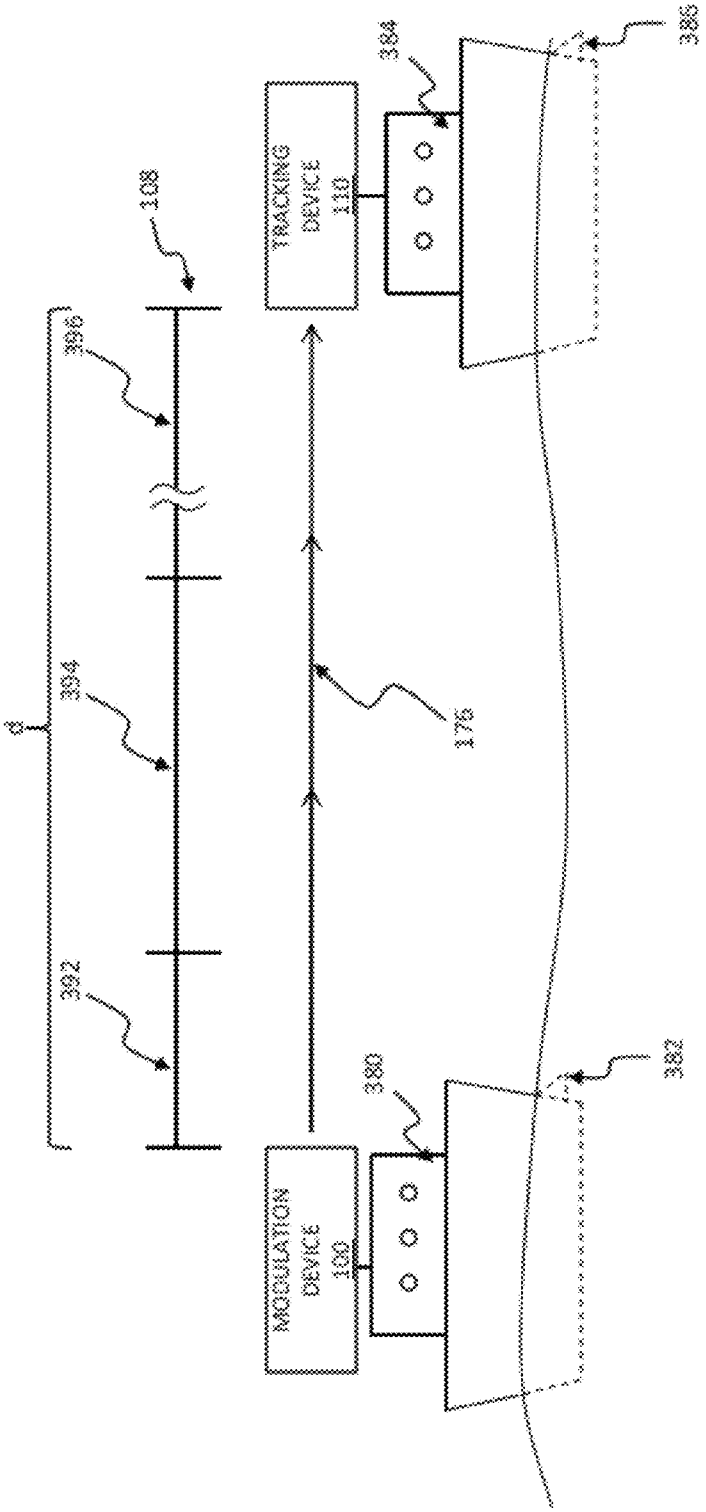
MODULATION DEVICE 100
TRACKING DEVICE 110
108
176
380
382
384
386
392
394
396
θ

FIG. 11

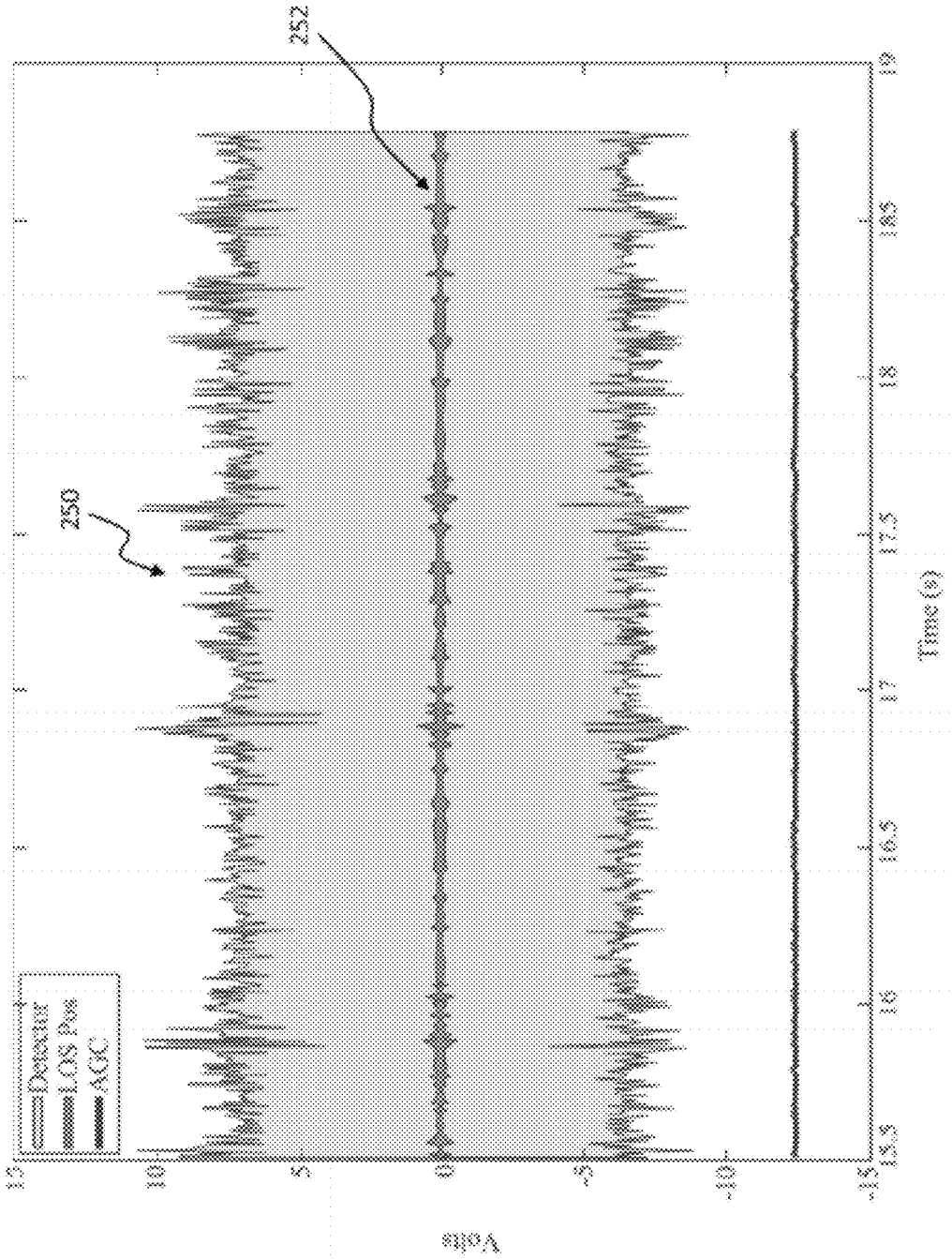
252
250
Detector
LOS Pos
AGC
15
10
5
0
-5
-10
-15
Volts
15.5
16
16.5
17
17.5
18
18.5
19
Time (s)

FIG. 12

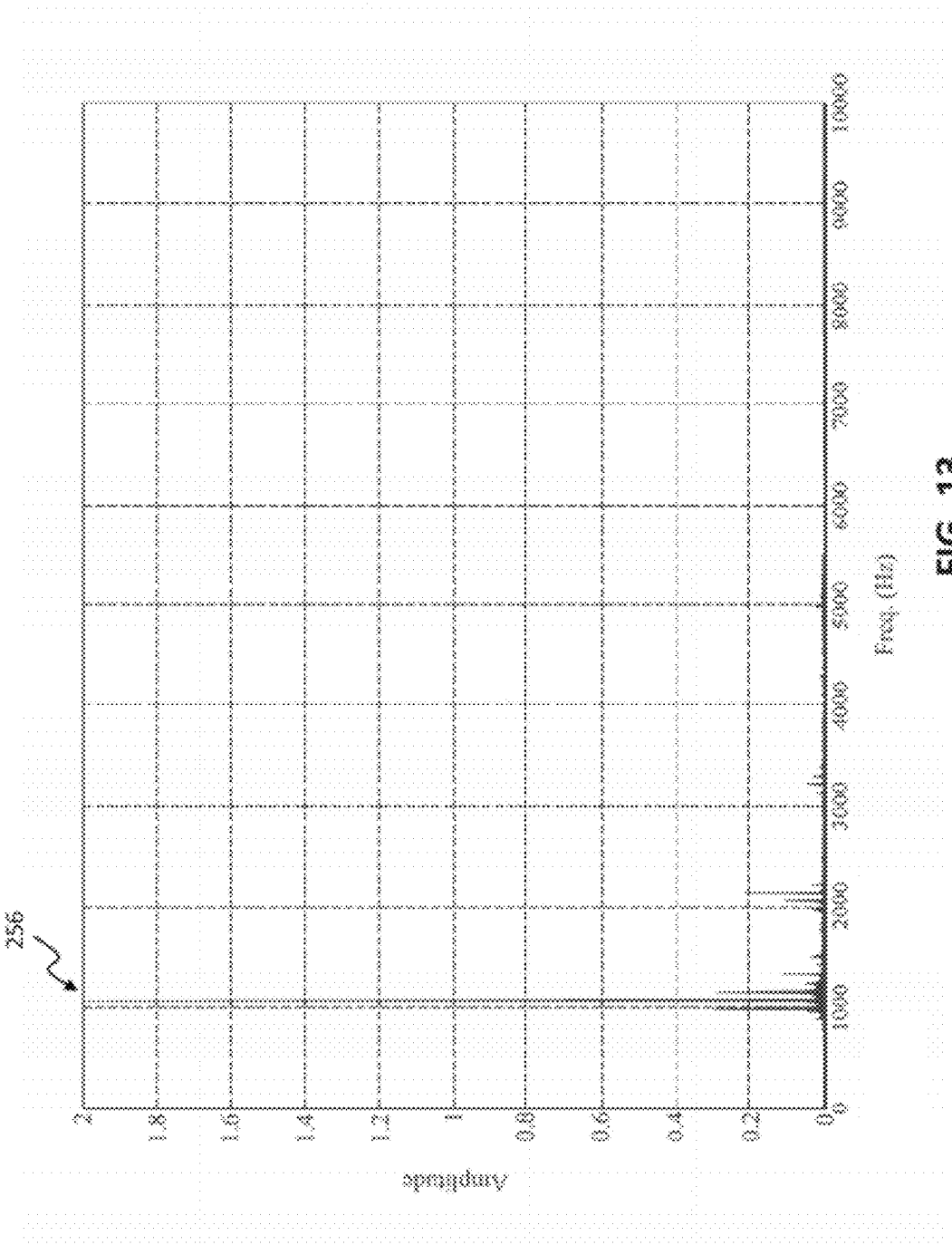
256
Amplitude
2
1.8
1.6
1.4
1.2
1
0.8
0.6
0.4
0.2
0
1000
2000
3000
4000
5000
6000
7000
8000
9000
10000
Freq. (Hz)

FIG. 13

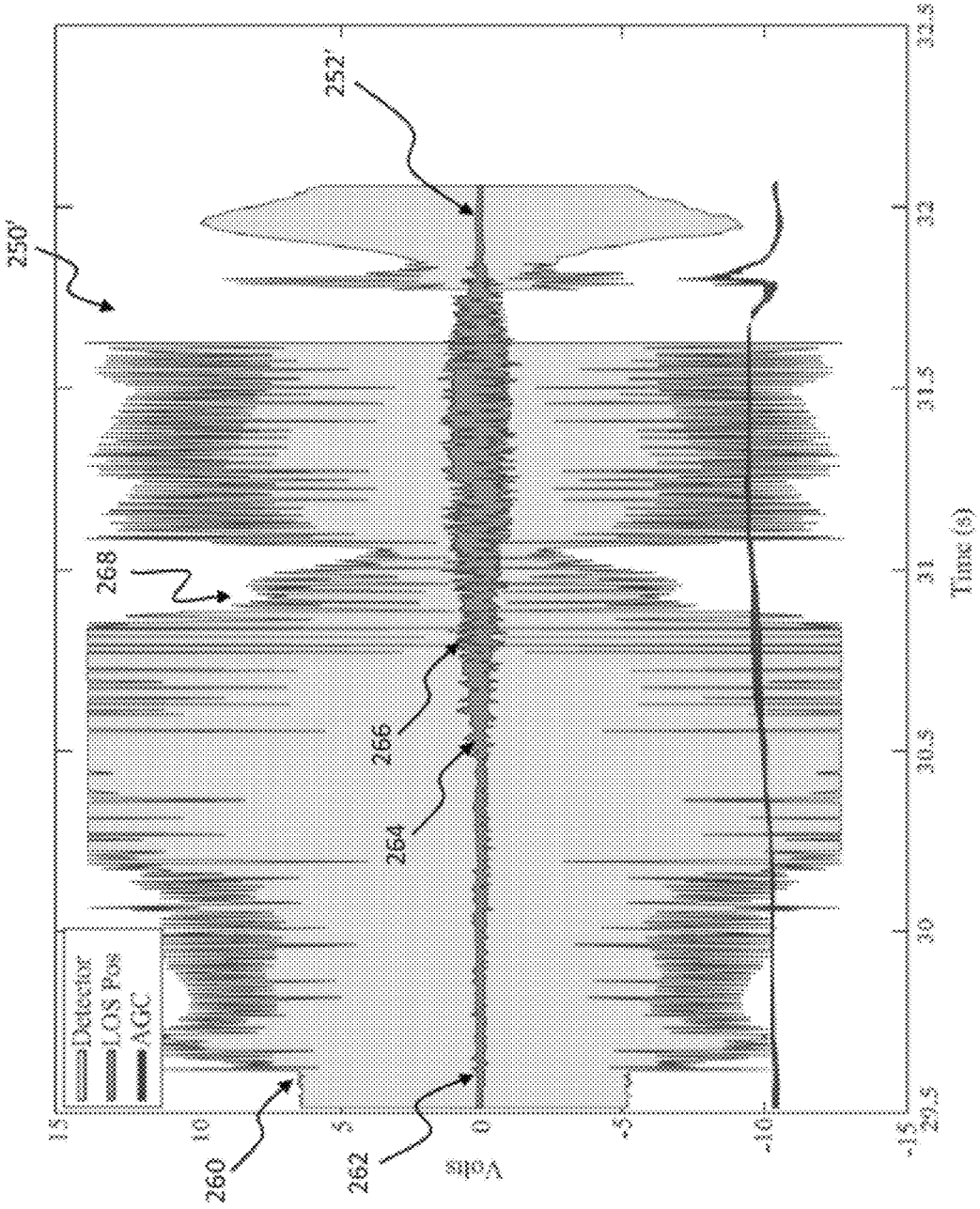
250'
252'
268
266
264
260
262
Detector
LOS Pos
AGC
Volts
Time (s)
15
10
5
0
-5
-10
-15
29.5
30
30.5
31
31.5
32
32.5

FIG. 14

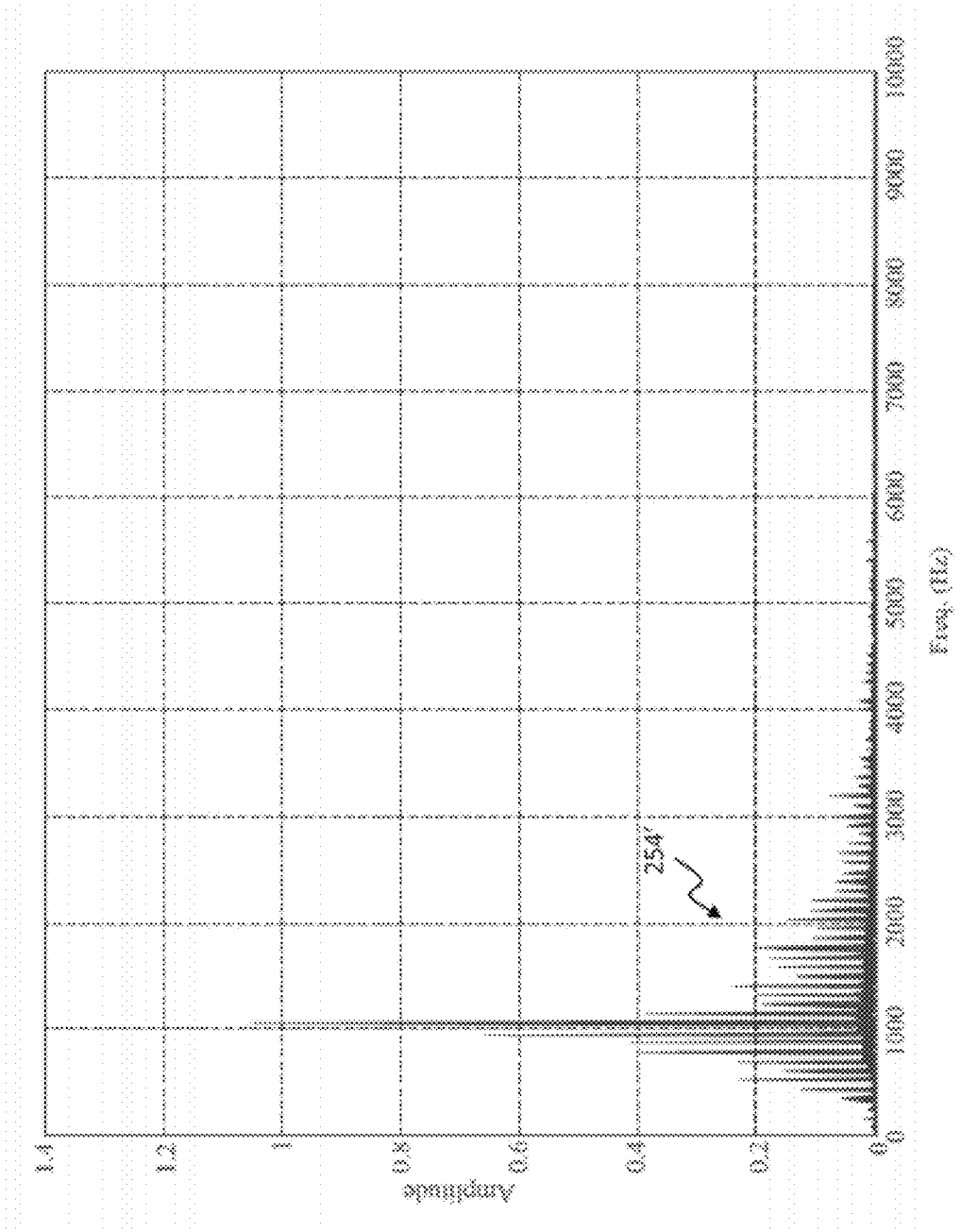
Amplitude
1.4
1.2
1
0.8
0.6
0.4
0.2
0
0
1000
2000
3000
4000
5000
6000
7000
8000
9000
10000
Freq. (Hz)
254'

FIG. 15

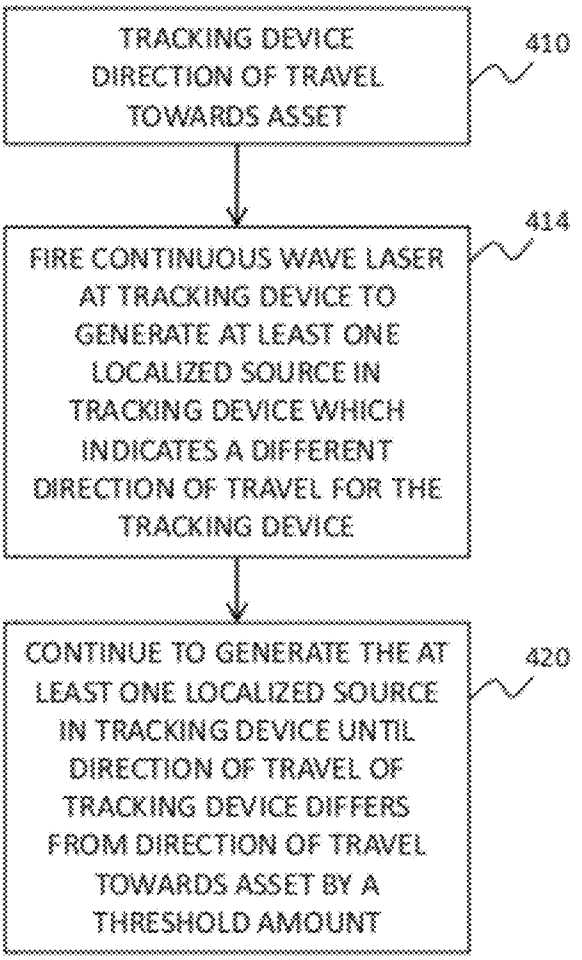
TRACKING DEVICE DIRECTION OF TRAVEL TOWARDS ASSET
410
FIRE CONTINUOUS WAVE LASER AT TRACKING DEVICE TO GENERATE AT LEAST ONE LOCALIZED SOURCE IN TRACKING DEVICE WHICH INDICATES A DIFFERENT DIRECTION OF TRAVEL FOR THE TRACKING DEVICE
414
CONTINUE TO GENERATE THE AT LEAST ONE LOCALIZED SOURCE IN TRACKING DEVICE UNTIL DIRECTION OF TRAVEL OF TRACKING DEVICE DIFFERS FROM DIRECTION OF TRAVEL TOWARDS ASSET BY A THRESHOLD AMOUNT
420

FIG. 16

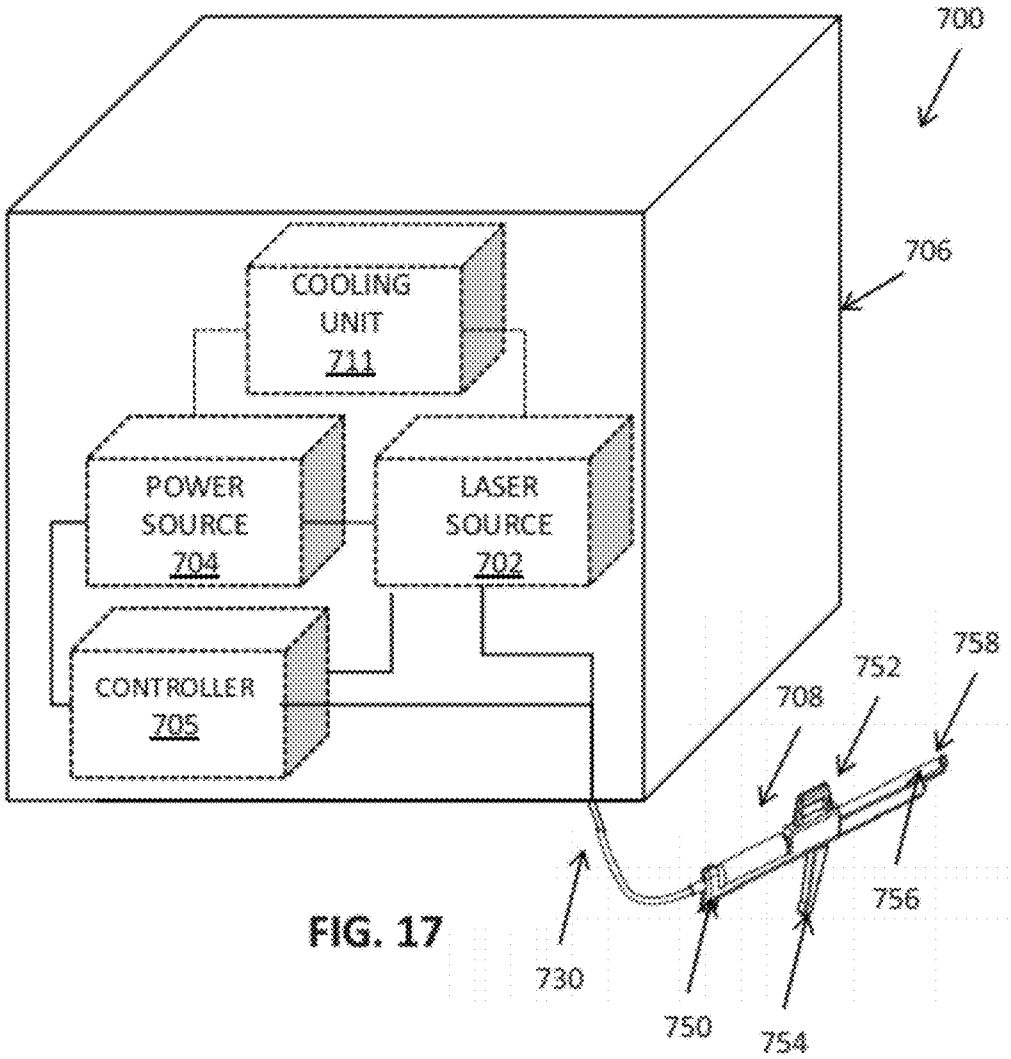
700
706
COOLING UNIT 711
POWER SOURCE 704
LASER SOURCE 702
CONTROLLER 705
758
752
708
756
730
750
754

FIG. 17

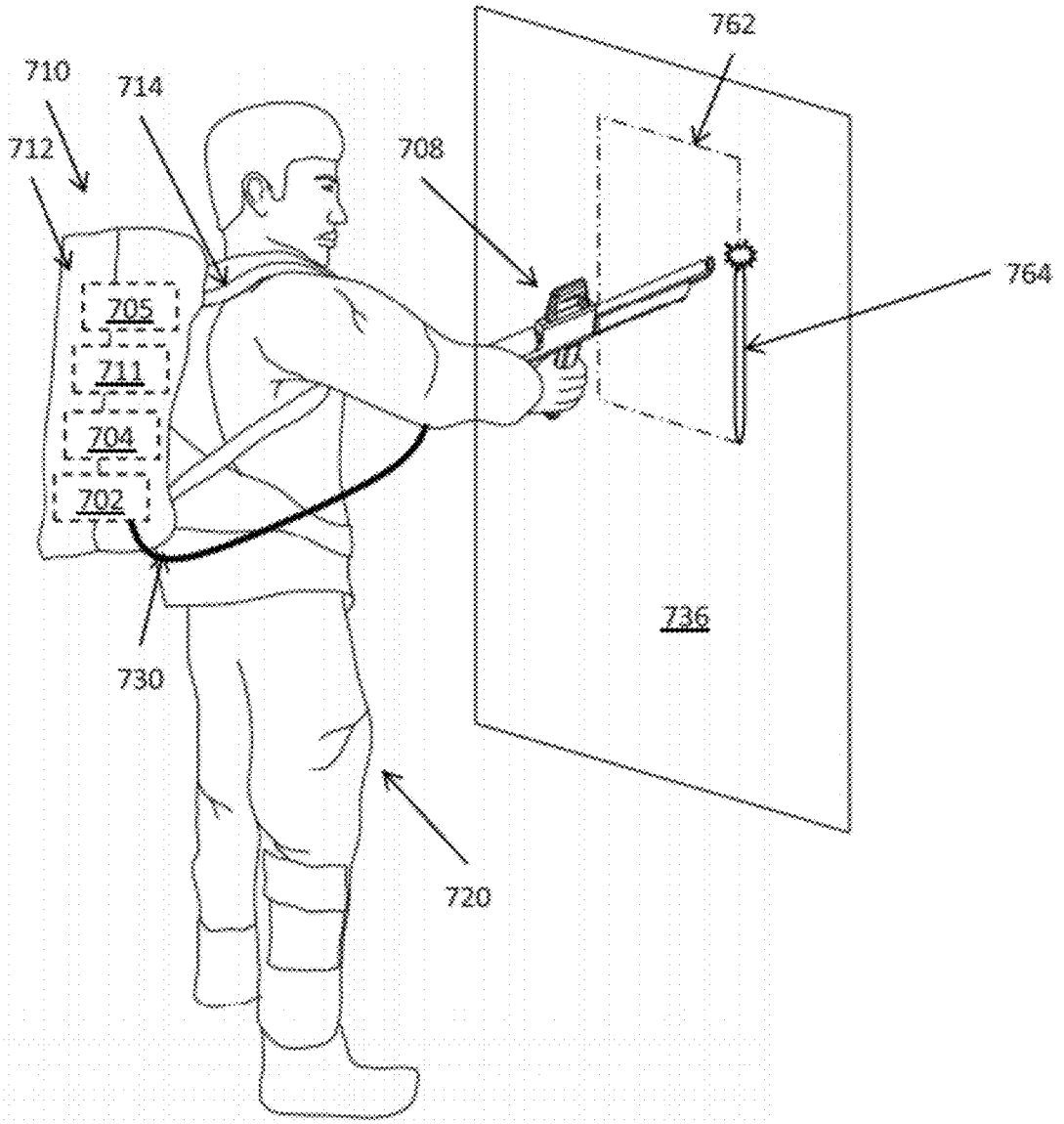

FIG. 18

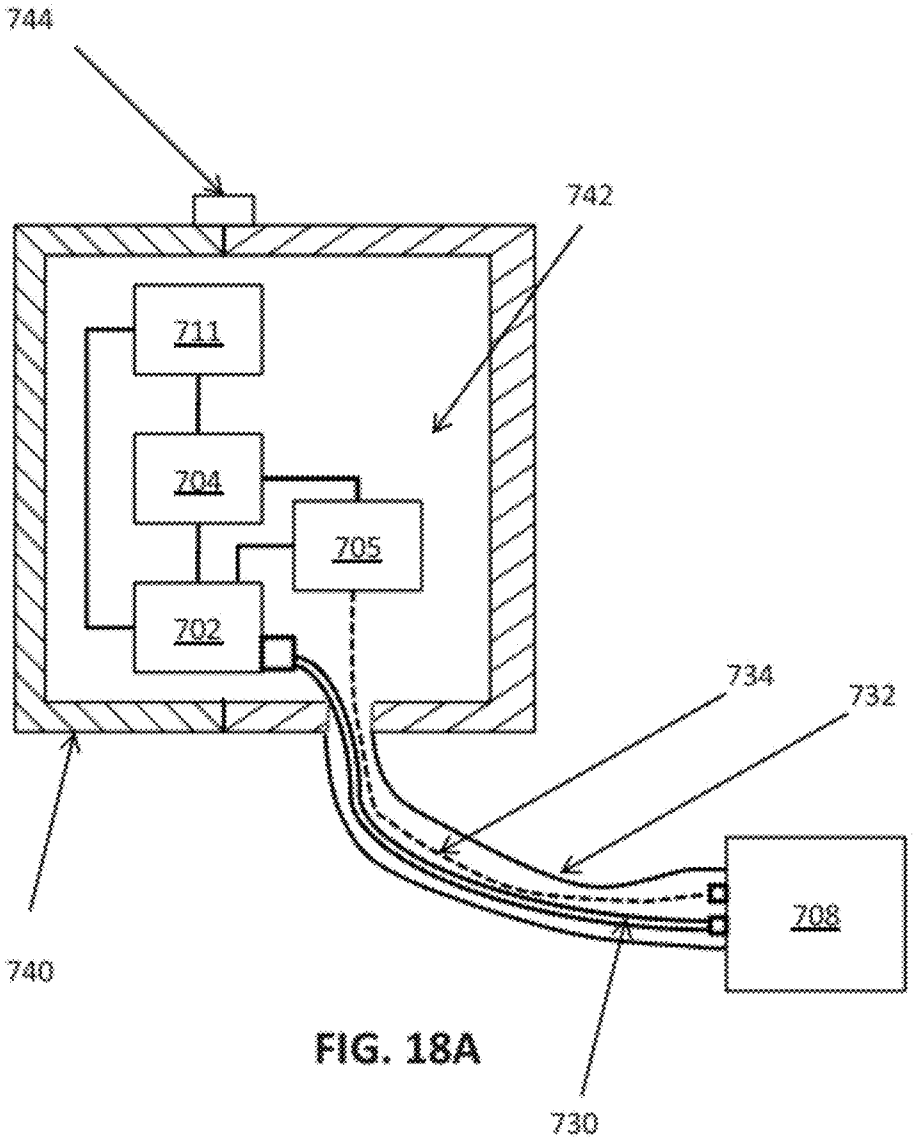

FIG. 18A

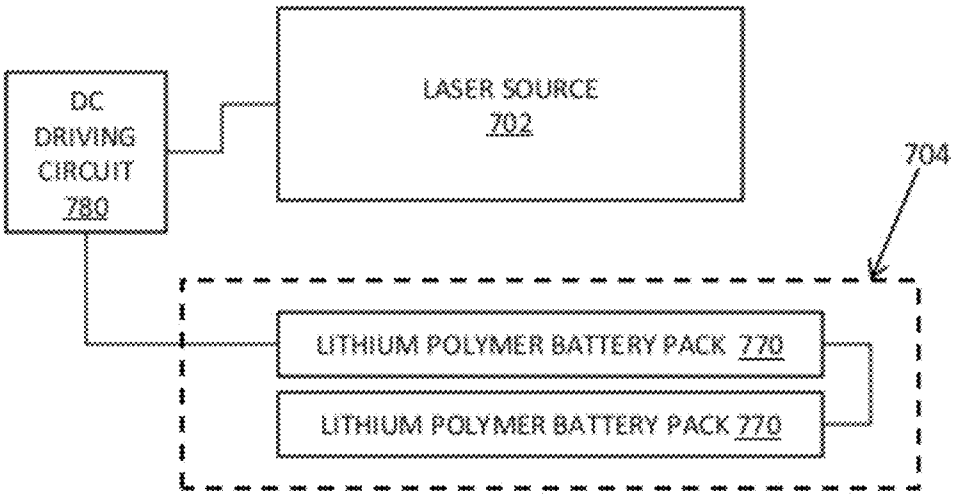
DC
DRIVING
CIRCUIT
780
LASER SOURCE
702
704
LITHIUM POLYMER BATTERY PACK 770
LITHIUM POLYMER BATTERY PACK 770

FIG. 19

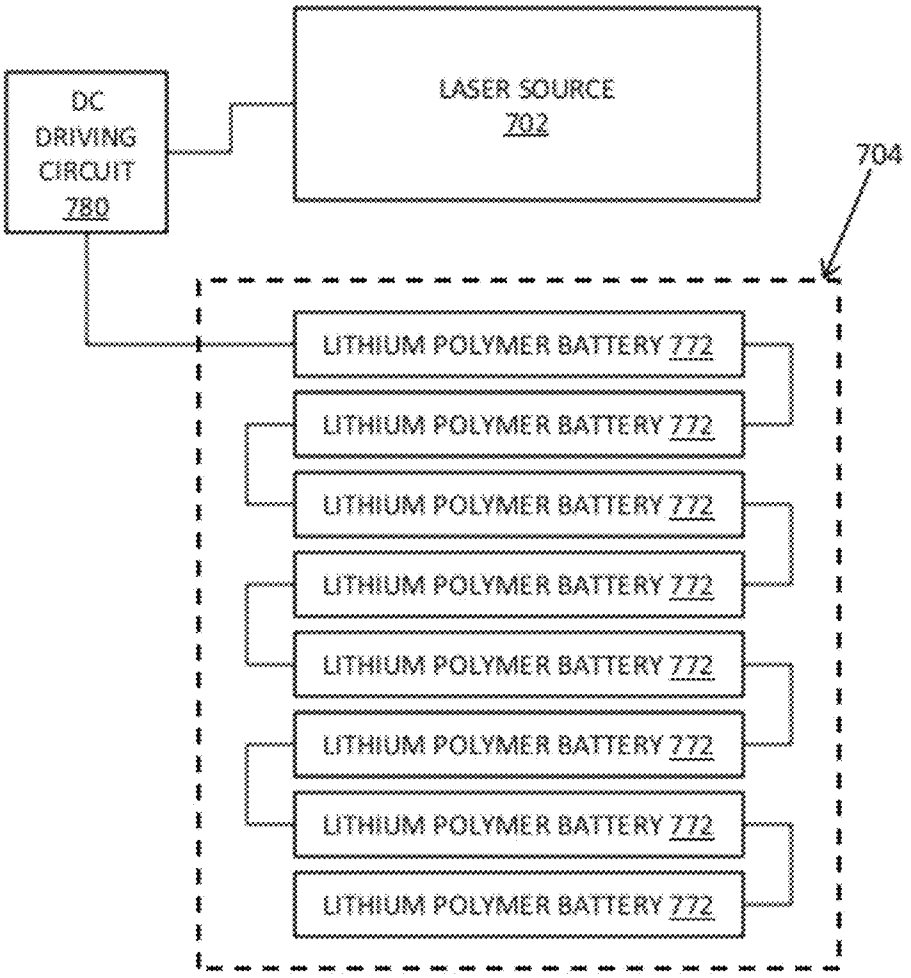
DC DRIVING CIRCUIT 780
LASER SOURCE 702
704
LITHIUM POLYMER BATTERY 772
LITHIUM POLYMER BATTERY 772
LITHIUM POLYMER BATTERY 772
LITHIUM POLYMER BATTERY 772
LITHIUM POLYMER BATTERY 772
LITHIUM POLYMER BATTERY 772
LITHIUM POLYMER BATTERY 772
LITHIUM POLYMER BATTERY 772

FIG. 20

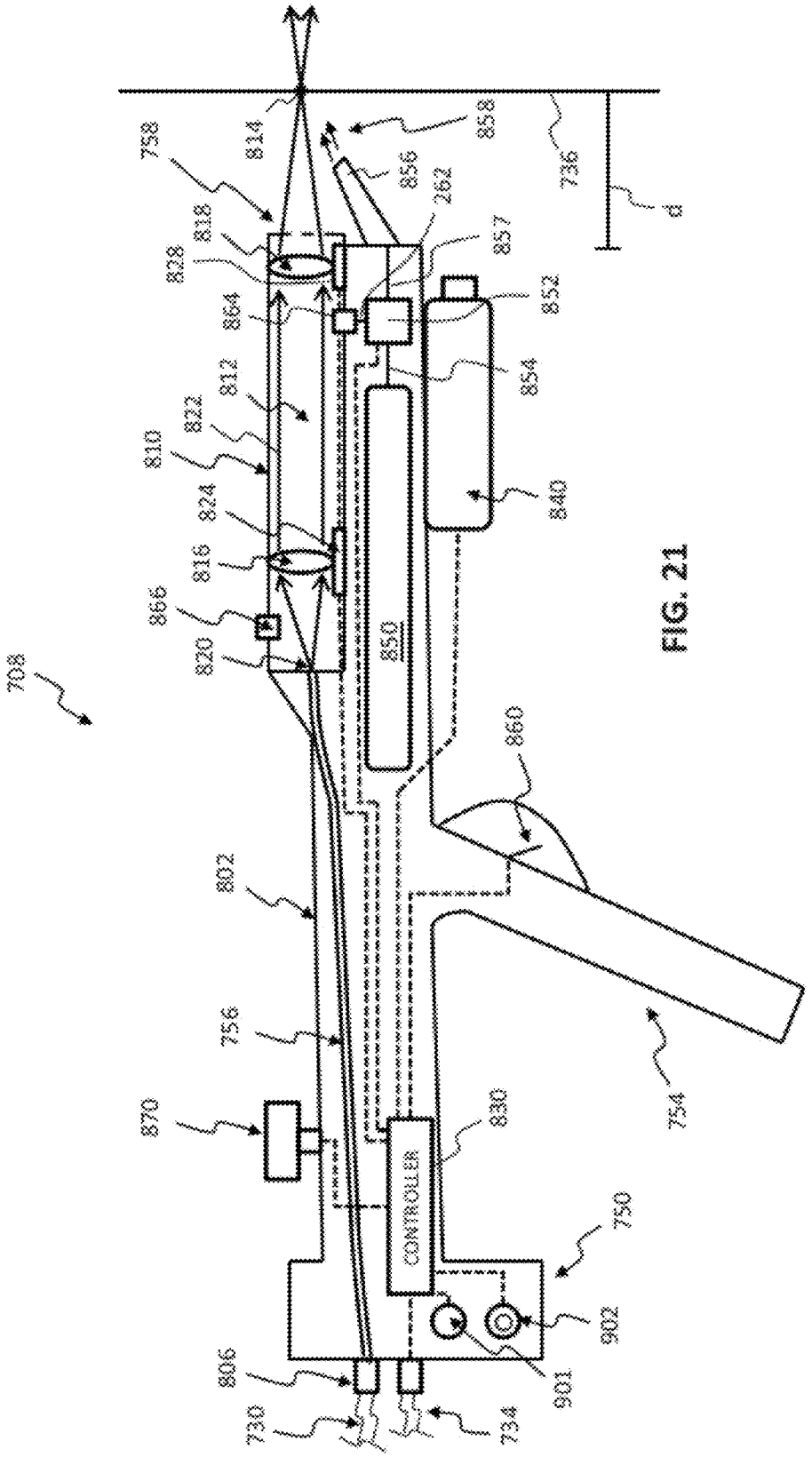
708
758
814
858
856
262
736
d
818
828
857
852
864
854
812
822
810
824
840
816
866
850
820
860
802
756
754
870
830
CONTROLLER
750
902
806
901
730
734

FIG. 21

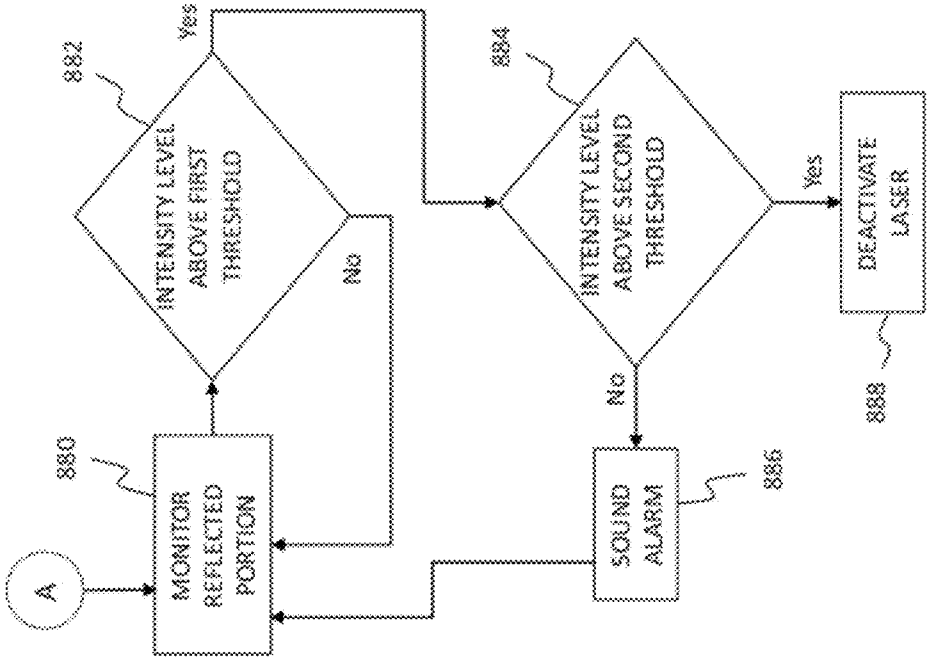

FIG. 23

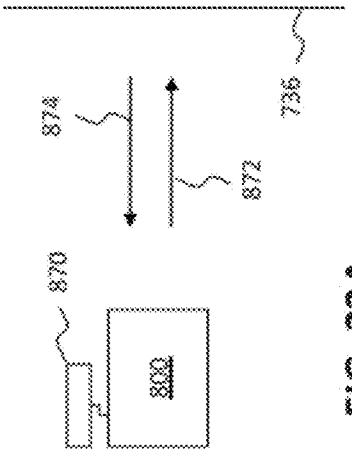

FIG. 22A

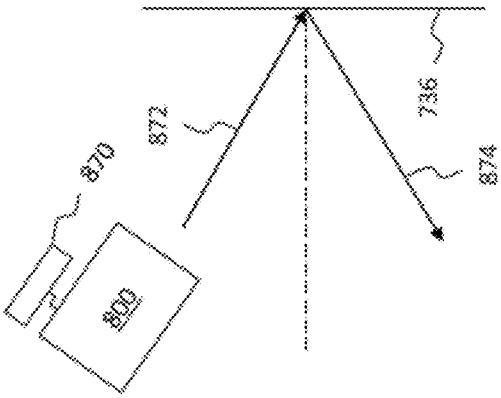

FIG. 22B

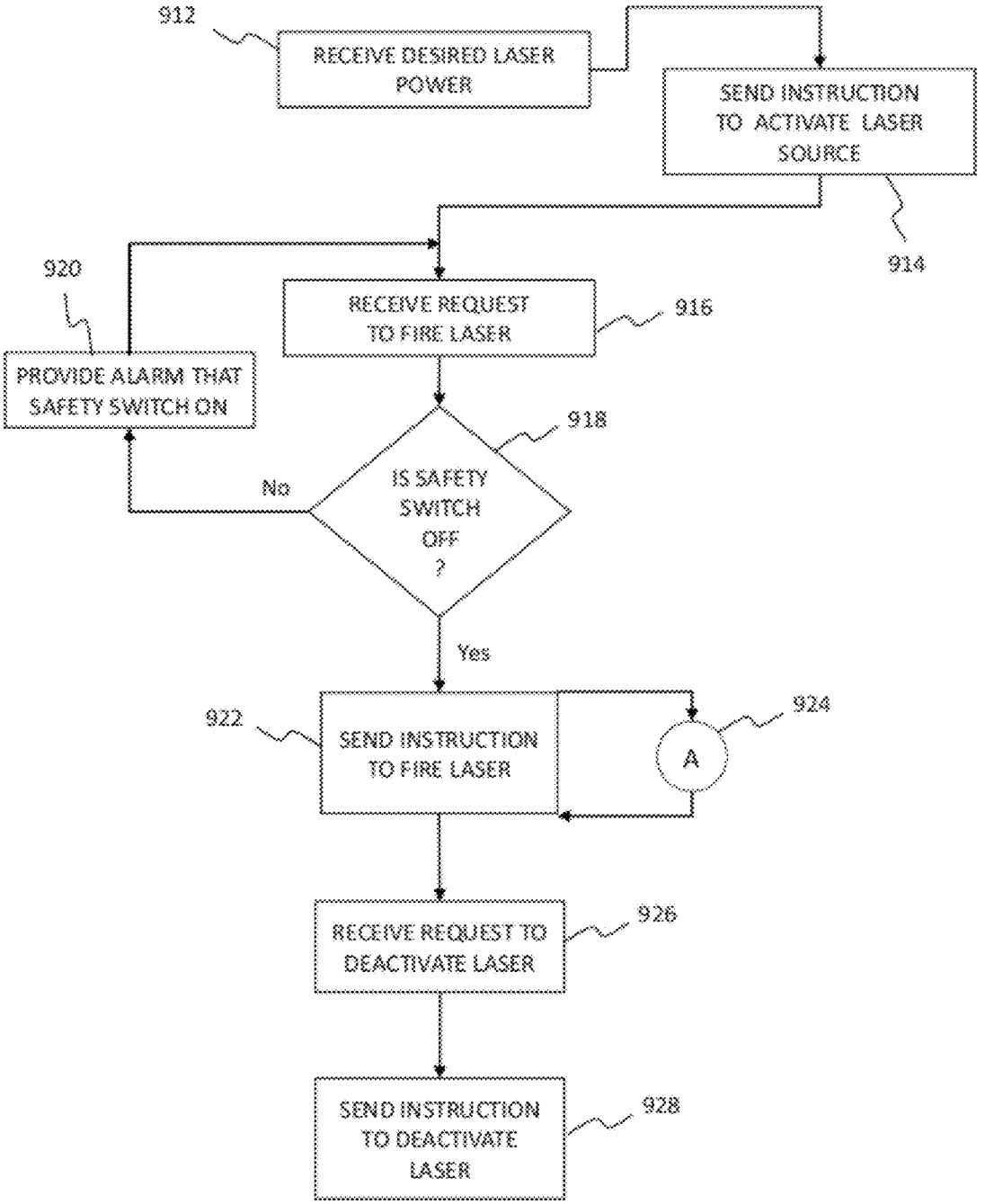
912
RECEIVE DESIRED LASER POWER
SEND INSTRUCTION TO ACTIVATE LASER SOURCE
914
920
RECEIVE REQUEST TO FIRE LASER
916
PROVIDE ALARM THAT SAFETY SWITCH ON
918
No
IS SAFETY SWITCH OFF ?
Yes
922
SEND INSTRUCTION TO FIRE LASER
924
A
RECEIVE REQUEST TO DEACTIVATE LASER
926
SEND INSTRUCTION TO DEACTIVATE LASER
928

FIG. 24

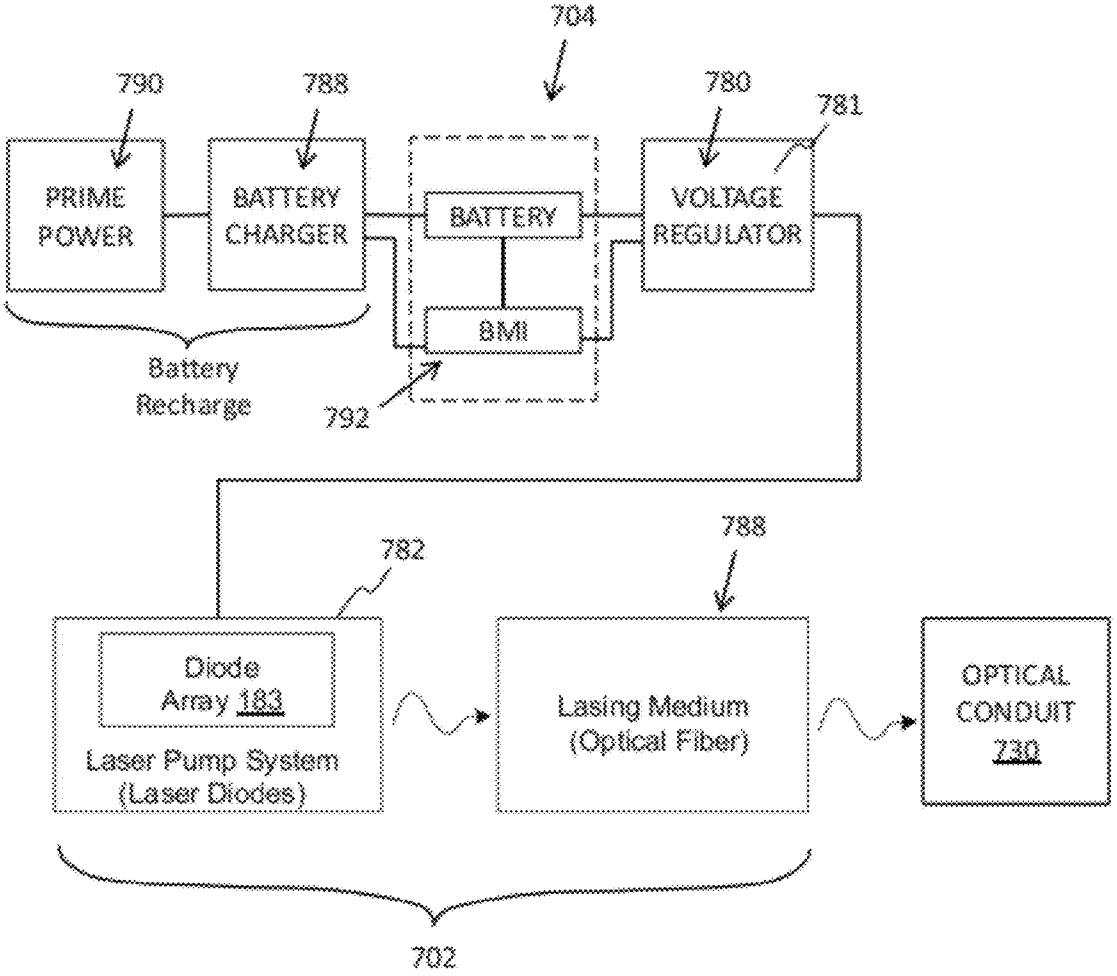
704
790
788
780
781
PRIME POWER
BATTERY CHARGER
BATTERY
VOLTAGE REGULATOR
BMI
Battery Recharge
792
782
788
Diode Array 183
Laser Pump System (Laser Diodes)
Lasing Medium (Optical Fiber)
OPTICAL CONDUIT 730
702

FIG. 25

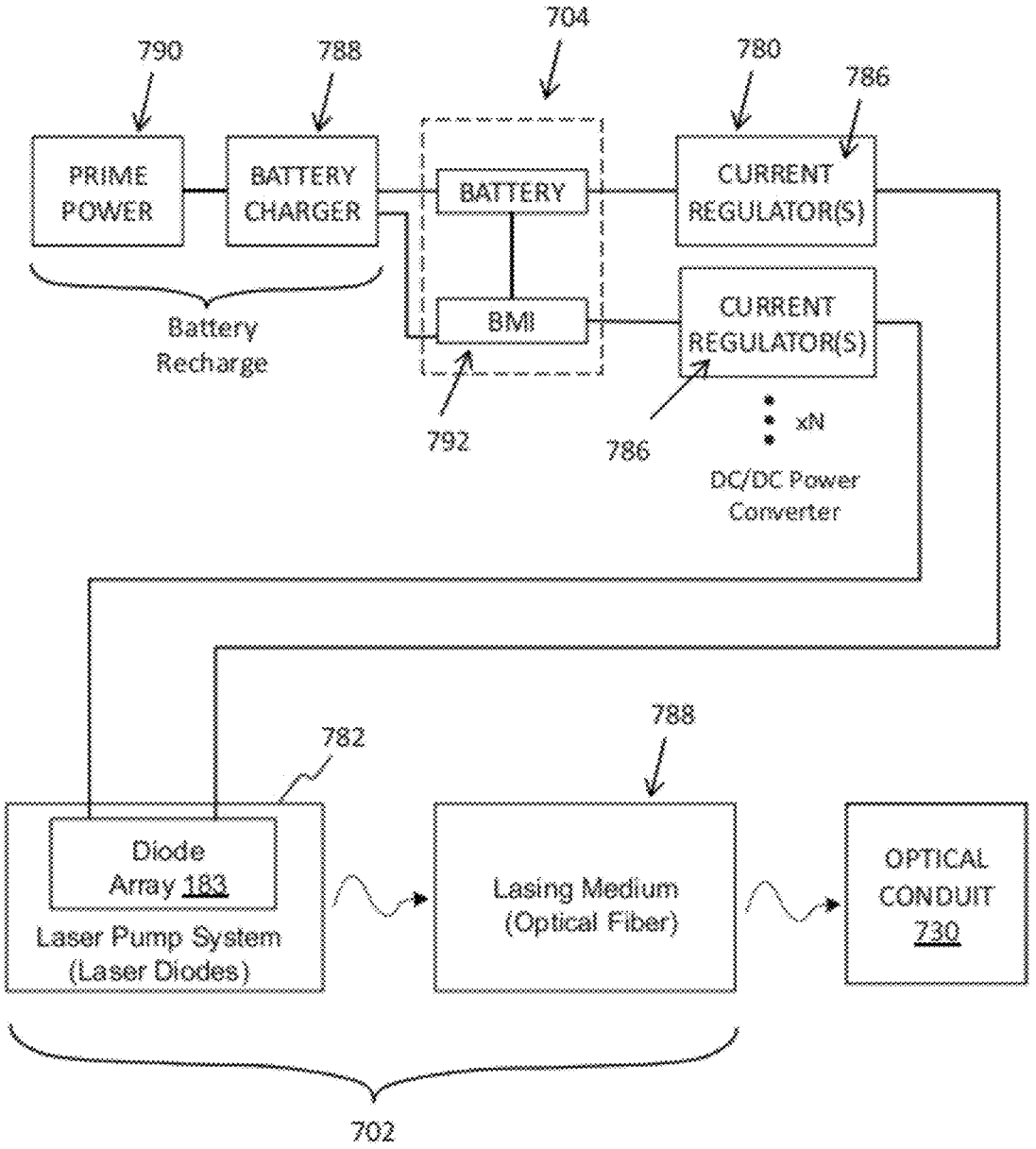
704
790
788
780
786
PRIME POWER
BATTERY CHARGER
BATTERY
CURRENT REGULATOR(S)
Battery Recharge
BMI
CURRENT REGULATOR(S)
792
786
xN
DC/DC Power Converter
782
788
Diode Array 183
Laser Pump System (Laser Diodes)
Lasing Medium (Optical Fiber)
OPTICAL CONDUIT 730
702

FIG. 26

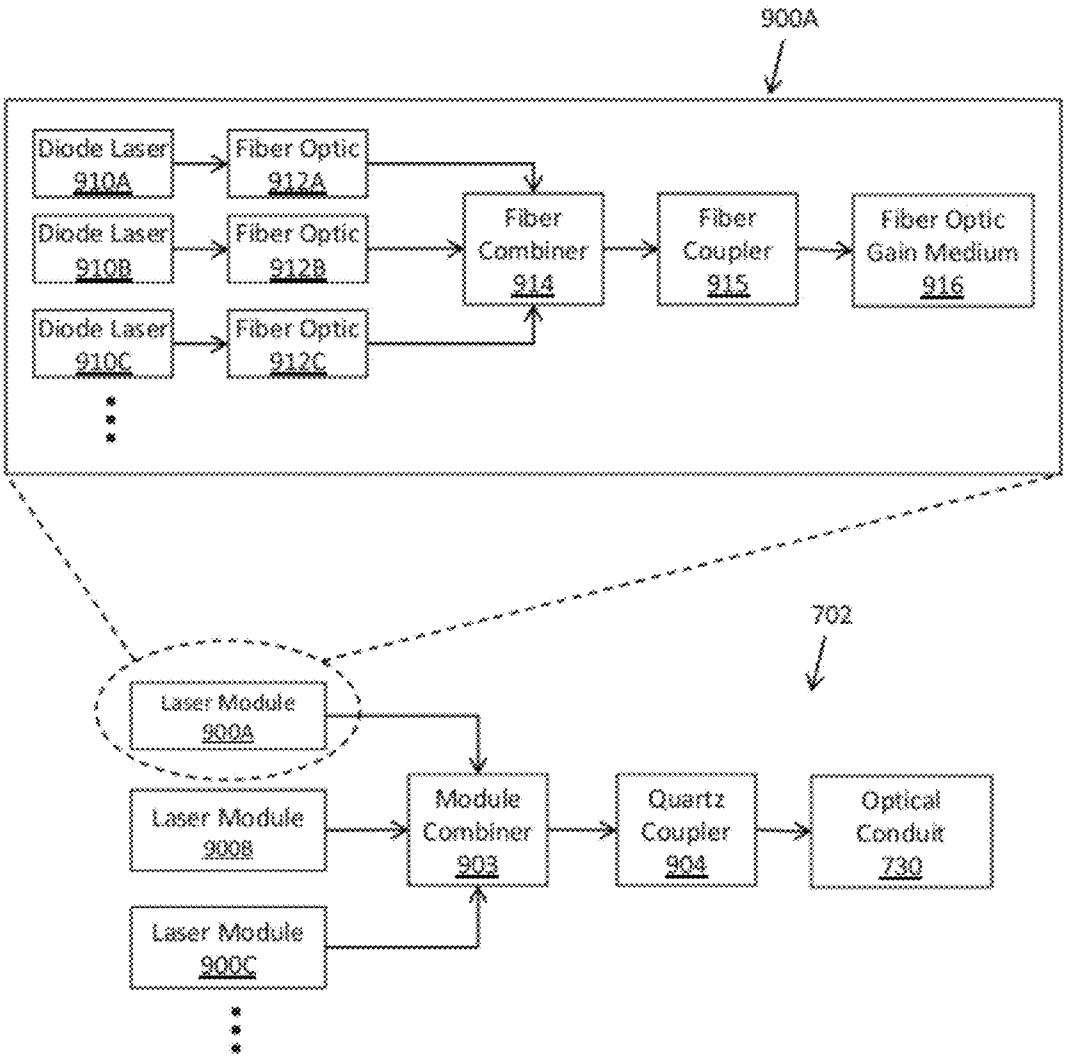
900A
Diode Laser 910A
Fiber Optic 912A
Diode Laser 910B
Fiber Optic 912B
Diode Laser 910C
Fiber Optic 912C
Fiber Combiner 914
Fiber Coupler 915
Fiber Optic Gain Medium 916
702
Laser Module 900A
Laser Module 900B
Laser Module 900C
Module Combiner 903
Quartz Coupler 904
Optical Conduit 730

FIG. 27

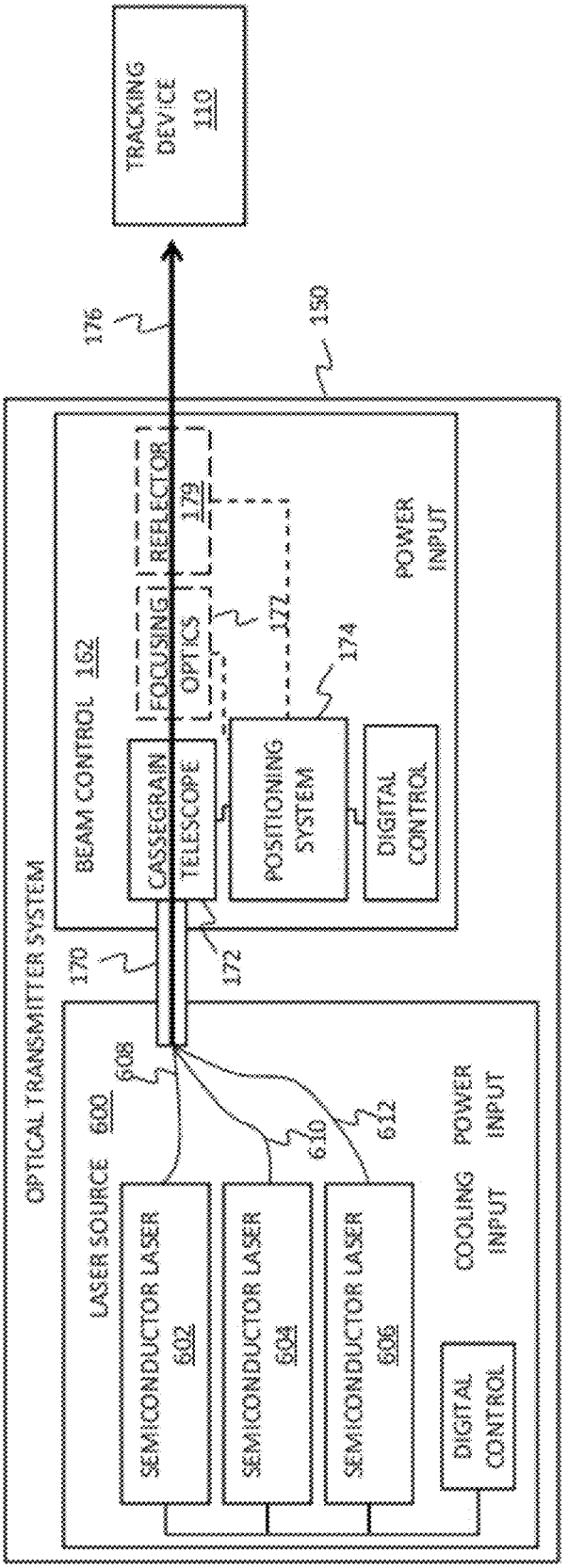
TRACKING DEVICE 110
176
150
OPTICAL TRANSMITTER SYSTEM
BEAM CONTROL 162
CASSEGRAIN TELESCOPE
FOCUSING OPTICS
REFLECTOR 178
172
174
POSITIONING SYSTEM
DIGITAL CONTROL
POWER INPUT
170
172
LASER SOURCE 600
608
610
612
SEMICONDUCTOR LASER 602
SEMICONDUCTOR LASER 604
SEMICONDUCTOR LASER 606
DIGITAL CONTROL
COOLING INPUT
POWER INPUT

FIG. 28

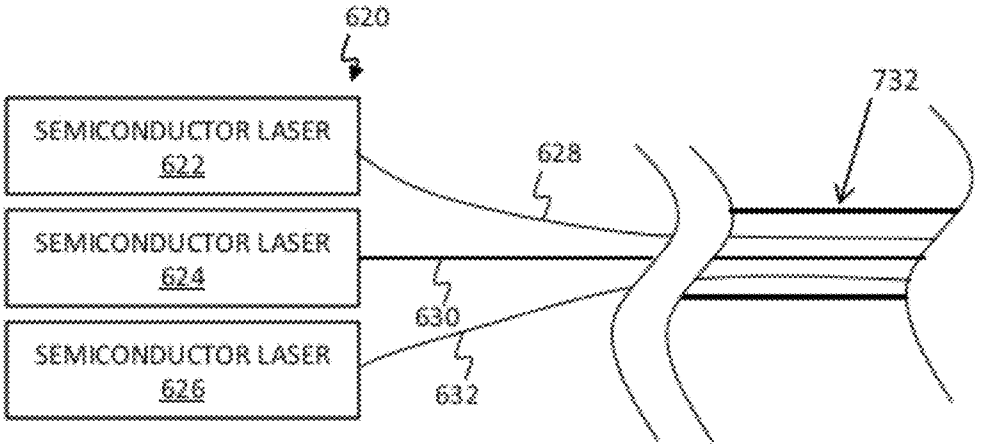
620
SEMICONDUCTOR LASER
622
SEMICONDUCTOR LASER
624
SEMICONDUCTOR LASER
626
628
630
632
732

FIG. 29

HIGH POWER LASER SYSTEM

RELATED APPLICATIONS

This application is a continuation-in-part of U.S. patent application Ser. No. 12/541,772, filed Aug. 14, 2009 and is a continuation-in-part of U.S. patent application Ser. No. 12/511,056, filed Jul. 28, 2009 now U.S. Pat. No. 8,305,252, the disclosures of which are expressly incorporated by reference herein.

U.S. patent application Ser. No. 12,778,870, filed May 12, 2010, titled MODULATION DEVICE FOR A MOBILE TRACKING DEVICE and U.S. patent application Ser. No. 12/778,892, filed May 12, 2010, titled SCENE ILLUMINATOR are expressly incorporated by reference herein.

STATEMENT REGARDING FEDERALLY SPONSORED RESEARCH OR DEVELOPMENT

The invention described herein was made in the performance of official duties by employees of the Department of the Navy and may be manufactured, used and licensed by or for the United States Government for any governmental purpose without payment of any royalties thereon.

BACKGROUND OF THE INVENTION

The present invention relates generally to a modulation device which causes a mobile tracking device to not approach closer to an asset and to devices for cutting an object, and more particularly, to a modulation device which directs the mobile tracking device away from the asset or disables the tracking device and to portable devices which are capable of breaching a barrier.

Presently, a multitude of mobile tracking devices are known which identify an asset and attempt to move closer to the asset and potentially contact the asset. Examples of mobile tracking devices include infrared based mobile tracking devices which examine the infrared energy which is emitted by the asset and detected by the mobile tracking device. These infrared mobile tracking devices alter their direction of travel to track the highest infrared energy being detected within their field of view. Such mobile tracking devices may rely on a non-imaging detection system or an imaging detection system.

There are several devices available to misdirect a mobile infrared tracking device away from an asset. One exemplary device is infrared hot bodies which appear brighter to the mobile infrared tracking device than the asset. These infrared hot bodies may be expelled by the asset. The mobile tracking device detects the brighter infrared hot bodies and follows the hot bodies as they become further spaced apart from the asset; thereby directing the mobile infrared tracking device away from the asset. Exemplary infrared hot bodies include flares.

Another type of device is a laser device which directs a pulsed or modulated laser signal at a detection system of the mobile tracking device. The pulsed or modulated laser signal is tailored to the specific characteristics of the mobile tracking device. An example of one device which is tailored to Multiple types of tracking devices is disclosed in U.S. Pat. No. 6,359,710.

Often times law enforcement, military personnel, fire personnel, and other types of rescue personnel need to open or otherwise cross a barrier. Exemplary barriers include doors, walls, and other impediments to advancement. Often times this requires the barrier to be altered to permit passage.

Often these personnel are working in confined areas and do not have access to large units which can assist in the breaching of a barrier. A need exists for a portable unit which can be carried by a person and which is capable providing enough power to effectively breach a barrier.

SUMMARY OF THE INVENTION

In an exemplary embodiment of the present disclosure, a modulation device is disclosed. In another exemplary embodiment, a method of interacting with a mobile tracking device is disclosed. In yet another exemplary embodiment of the present disclosure, a portable cutting device is disclosed. In still another exemplary embodiment of the present disclosure, a method of using a portable cutting device is disclosed.

In another exemplary embodiment of the present disclosure, an apparatus for interacting with a mobile tracking device is provided. The apparatus comprising a body; at least one propulsion device supported by the body; a plurality of sensor modules supported by the body which monitor the environment surrounding the body; a controller operatively connected to the plurality of sensor modules, the controller determining a presence of the mobile tracking device in the environment surrounding the body based on information collected by the plurality of sensor modules and a current location of the mobile tracking device; and a modulation system which receives the current location of the mobile tracking device from the controller, orients a tracking system of the modulation system based on the current location of the mobile tracking device, detects the mobile tracking device, updates the location of the mobile tracking device, and directs a continuous beam of optical energy at the mobile tracking device. The continuous beam of optical energy being produced by a plurality of semiconductor lasers whose output are combined.

In yet another exemplary embodiment of the present disclosure, a portable cutting device for transport by a human operator is provided. The portable cutting device comprising a laser source which provides optical energy, the laser source being a plurality of continuous wave semiconductor lasers whose output is combined to provide the optical energy; a battery power source; a laser directing device supporting focusing optics in a collimating chamber, the focusing optics focus the optical energy provided by the laser source; at least one storage container, the at least one storage container housing the laser source and the battery power source; and at least one flexible optical conduit extending from an interior of the at least one storage container to the laser directing device, the at least one flexible optical conduit communicating the optical energy produced by the laser source to the laser directing device.

BRIEF DESCRIPTION OF THE DRAWINGS

The foregoing aspects and many of the attendant advantages of this invention will become more readily appreciated as the same become better understood by reference to the following detailed description when taken in conjunction with the accompanying drawings.

FIG. **1** illustrates a representative view of a modulation device and associated asset;

FIG. **2** is a view of a representative asset;

FIG. **2**A illustrates the representative asset of FIG. **2** with a mobile tracking device approaching the representative asset along a first direction and optical energy from the modulation device being directed at the mobile tracking device;

FIG. **2**B illustrates the mobile tracking device changing its direction of travel to a second direction due to the optical energy directed from the modulation device at the mobile tracking device;

FIG. **2**C illustrates the mobile tracking device changing its direction of travel to a third direction due to the optical energy directed from the modulation device at the mobile tracking device;

FIG. **2**D illustrates the mobile tracking device changing its direction of travel to a fourth direction due to the optical energy directed from the modulation device at the mobile tracking device;

FIG. **3** illustrates an exemplary mobile tracking device;

FIG. **4** illustrates an exemplary laser source;

FIG. **5** illustrates a perspective view of a modulation on device wherein portions of the housing are shown in phantom;

FIG. **6** illustrates a first arrangement of components of a power supply of the modulation device;

FIG. **7** illustrates a second arrangement of components of a power supply of the modulation device;

FIG. **8** illustrates a processing sequence for charging the battery source of the modulation device;

FIG. **9** illustrates a representative view of a modulation device and associated asset;

FIGS. **10**A and **10**B illustrate a processing sequence for engaging a mobile tracking device;

FIG. **11** illustrates a representative asset being tracked by a representative mobile tracking device;

FIGS. **12** and **13** represent the response characteristics of a mobile tracking device following an asset; and

FIGS. **14** and **15** represent the response characteristics of a mobile tracking device following an asset and being subsequently illuminated by a modulation device;

FIG. **16** illustrates a method of countering a mobile tracking device with a modulation device;

FIG. **17** is a representative view of a portable cutting device;

FIG. **18** shows the portable cutting device of FIG. **17** being used to breach a barrier;

FIG. **18**A is a representative view of the cargo carrying portion of the backpack shown in FIG. **18**;

FIG. **19** is a representative view of an exemplary portable battery power supply;

FIG. **20** is a representative view of an exemplary second portable battery power supply;

FIG. **21** is a representative view of a laser directing device of the portable cutting device of FIG. **18**;

FIG. **22**A illustrates a first positioning of the laser directing device relative to the barrier;

FIG. **22**B illustrates a second positioning of the laser directing device relative to the barrier;

FIG. **23** illustrates a processing sequence of a controller of the portable cutting device;

FIG. **24** illustrates another processing sequence of the controller of the portable cutting device;

FIG. **25** illustrates a first arrangement of components of the portable cutting device;

FIG. **26** illustrates a second arrangement of components of the portable cutting device;

FIG. **27** illustrates an exemplary laser source;

FIG. **28** illustrates a representative view of a modulation device and associated asset; and

FIG. **29** a representative view of a portion of a portable cutting device.

Corresponding reference characters indicate corresponding parts throughout the several views. Although the drawings represent embodiments of various features and components according to the present disclosure, the drawings are not necessarily to scale and certain features may be exaggerated in order to better illustrate and explain the present disclosure. The exemplification set out herein illustrates embodiments of the invention, and such exemplifications are not to be construed as limiting the scope of the invention in any manner.

DETAILED DESCRIPTION OF THE DRAWINGS

For the purposes of promoting an understanding of the principles of the invention, reference will now be made to the embodiments illustrated in the drawings, which are described below. The embodiments disclosed below are not intended to be exhaustive or limit the invention to the precise form disclosed in the following detailed description. Rather, the embodiments are chosen and described so that others skilled in the art may utilize their teachings. It will be understood that no limitation of the scope of the invention is thereby intended. The invention includes any alterations and further modifications in the illustrated devices and described methods and further applications of the principles of the invention which would normally occur to one skilled in the art to which the invention relates.

The present disclosure is directed to modulation devices which are implemented to protect aircraft, such as commercial airlines and military aircraft. However, the principles discussed herein are applicable to other types of assets. Exemplary assets include moveable assets, such as aircraft, ships, buses, or trucks, or land based assets, such as an airport, factory, budding, or facility. Exemplary modulation devices include countermeasure devices.

Referring to FIG. **1**, a modulation device **100** is shown. Modulation device **100** is coupled to an asset **102**. For purposes of discussion, asset **102** is considered to be an airplane, such as the airplane designated **102** in FIG. **2**. However, the present disclosure is contemplated for use with a multitude of different assets. Airplane **102** includes a body or fuselage **104**, a pair of main wings **105**, tail wings **106**, and a plurality of propulsion devices **108**. Exemplary propulsion devices include jet engines, internal combustion engines with associated propellers, and any other suitable engine arrangement.

Referring to FIG. **3**, components of a mobile tracking device **110** are shown. Mobile tracking device **110** includes a propulsion system **112** which provides power to propel mobile tracking device **110**. Exemplary propulsion systems include solid fuel rockets, engines, and any other suitable devices for providing power to mobile tracking device **110**. Mobile tracking device **110** also includes a guidance system **114** which controls the direction of travel of mobile tracking device **110**. Exemplary guidance system components include wings for an airborne mobile tracking device **110**, a rudder for a marine mobile tracking device **110**, and ground engaging members for a land based mobile tracking device **110**. The guidance system **114** steers mobile tracking device **110** to change a direction of travel of mobile tracking device **110**. Exemplary airborne tracking devices include rockets, airplanes, and other flying devices. Exemplary marine tracking devices include boats (see FIG. **11**), submersible devices, and other marine devices. Exemplary land based tracking devices include wheeled devices, tracked devices, and other suitable land based devices.

Mobile tracking device **110** includes a controller **116** which controls the operation of propulsion system **12** and guidance system **114**. Mobile tracking device **110** also includes a gimbaled seeker head **115** which is able to move independent of the remainder of mobile tracking device **110**.

Seeker head **115** supports controller **116**, a detector **118**, telescope **120**, a reticule **122**, and optics **124**.

In operation, electromagnetic radiation **126** from the environment enters an optical window **128** of mobile tracking device **110**. Optical window **128** may be a dome. Optical window **128** may be selected to only pass electromagnetic radiation **126** within a certain wavelength band. For instance, in the case of an infrared mobile tracking device **110**, optical window **128** may only pass electromagnetic radiation **126** within the infrared spectrum or a portion of the infrared spectrum. In other embodiments, a separate filter **125** is included somewhere within the optical setup of mobile tracking device **110** to limit the range of wavelengths of electromagnetic radiation **126** passed on to detector **118**. Filter **125** is shown between optical window **128** and telescope **120**. However, filter **125** may be positioned anywhere between optical window **128** and detector **118**.

The electromagnetic radiation **126** is received by telescope **120**. Telescope **120** includes a primary mirror **121** which focuses the electromagnetic radiation **126** towards a secondary mirror **123**. Secondary mirror **123** in turn focuses the electromagnetic radiation **126** towards reticule **122**. Reticule **122** spins to provide a modulated signal of the electromagnetic radiation. Optics **124** receives and focus the modulated signal of the electromagnetic radiation **126** passing through reticule **122** onto detector **118** which is a non-imaging detector.

Controller **116** receives input from detector **118** which is used by controller **116** to determine the location the brightest object in the environment, typically asset **102**. The modulated signal allows controller **116** to discriminate between background electromagnetic radiation and the radiation of asset **102**, as well as, determine the location of asset **102** relative to a direction of travel of mobile tracking device **110**. Based on this input from detector **118**, controller **116** determines a desired direction of travel for mobile tracking device **110** which corresponds to tracking device **110** heading towards asset **102**. Seeker head **115** is adjusted to center the brightest object in the environment so that seeker head **115** is pointed directly at the brightest object. Controller **116** provides this adjustment of seeker head **115** (from its intended orientation in line with the direction of travel of mobile tracking device **110**) to guidance system **114** as error signal **129**. Guidance system **114** uses this error signal **129** to alter the direction of travel of mobile tracking device **110**. Over time, if mobile tracking device **110** is tracking asset **102** mobile tracking device **110** will be pointed at asset **102** and seeker head **115** generally produces a small error signal which is indicative of mobile tracking device **110** being aligned to intercept asset **102**.

In the embodiment illustrated in FIG. **3**, mobile tracking device **110** includes a spinning reticule **122**. In another embodiment, mobile tracking device **110** does not include reticule **122** but rather secondary mirror **123** is tilted and telescope **120** is spun to produce a signal for controller **116**. In one embodiment, detector **118** is an imaging detector and controller **116** processes the images from detector **118** to determine the location of asset **102**.

Returning to FIG. **2**, airplane **102** includes warning/cuing system **130** which detects when a mobile tracking device **110** has been launched and/or is tracking airplane **102**. Warning/cuing system **130** includes sensor modules **131** which monitor the environment around airplane **102**. Illustratively, four sensor modules **131**A-D are shown. Depending on the asset **102** being protected, fewer or additional sensor modules **131** may be used. In one embodiment, sensor modules **131** include focal plane array sensors with wide d of views that continuously survey the environment for mobile tracking devices **110**. In one embodiment, warning/cuing system **130** looks for a characteristic signal that indicates the launch of an airborne mobile tracking device **110**. In the case of airborne mobile tracking device **110**, the mobile tracking device **110** has a characteristic infrared and ultraviolet signature which warning/cuing system **130** recognizes as an airborne mobile tracking device **110**.

Exemplary warning/cuing systems are disclosed in U.S. patent application Ser. No. 12/541,772, filed Aug. 14, 2009, the disclosure of which is expressly incorporated by reference herein. As explained herein, warning/cuing system **130** communicates with modulation device **100**. Modulation device **100**, in turn, provides optical energy from a continuous wave laser to redirect mobile tracking device **110** from tracking the path of asset **102** or to disable mobile tracking device **110**. In one embodiment, warning/cuing system **130** is provided as part of modulation device **100** instead of as a separate component of airplane **102**.

Airplane **102** further includes a fire control system **140**. Fire control system **140** interprets information provided by warning/cuing system **130** and provides a user interface **142** through which the operator of asset **102** activates modulation device **100**. In one embodiment, user interface **142** includes a user input **143** to enable modulation device **100** and a user input **145** to permit modulation device **100** to fire. In one embodiment, modulation device **100** is automatically activated when asset **102** is moving. Exemplary inputs include switches, buttons, and other suitable types of user inputs.

Returning to FIG. **1**, modulation device **100** is represented. Modulation device **100** includes an optical transmitter system **150**, a power system **152**, a system controller **154**, and a cooling system **156**. Each of optical transmitter system **150**, power system **152**, and cooling system **156** are coupled to system controller **154**. System controller **154** receives input from and provides instructions to each of optical transmitter system **150**, power system **152**, and cooling system **156** to control the operation of modulation device **100**. As explained herein, in one embodiment, modulation device **100** is housed in a self-contained pod which may be coupled to asset **102**.

Optical transmitter system **150** includes a laser source module **160** and a beam control module **162**. Laser source module **160** includes a high voltage power supply **164** which receives power from power system **152**. High voltage power supply **164** drives a continuous wave laser **166**. In one embodiment, continuous wave laser **166** is a continuous wave fiber laser. In one embodiment, continuous wave laser **166** is a continuous wave Ytterbium single mode fiber laser. Details regarding an exemplary continuous wave laser **166** are provided in U.S. patent application Ser. No. 11/973,437, titled POWERFUL FIBER LASER SYSTEM, assigned to IPG Photonics Corporation, the disclosure of which is expressly incorporated by reference herein. Details regarding an exemplary continuous wave laser **166** are provided in U.S. patent application Ser. No. 11/611,247, titled FIBER LASER WITH LARGE MODE AREA FIBER, assigned to IPG Photonics Corporation, the disclosure of which is expressly incorporated by reference herein. In one embodiment, continuous wave laser **166** is a solid state laser. Other exemplary continuous wave lasers include a 2.0 micrometer (μm) Thulium Fiber Laser (1.96-2.2 (μm) Thulium laser) having an output power of about at least 1 kW and a 1.0 μm, 800 Watt Direct Diode. An exemplary Thulium fiber laser is disclosed in U.S. Pat. No. 6,801,550, the disclosure of which is expressly incorporated by reference herein.

Referring to FIG. **4**, an exemplary configuration of continuous wave laser **166** is shown. Continuous wave laser **166**

includes a plurality of individual modules **300** each of which provide a single mode 1.07 μm output beam. The output of each of modules **300** is combined together through a module combiner **302** which brings the energy together in a single beam. This combined beam is coupled to an optical conduit **170** through a quartz coupler **304**. Although three laser modules **300** are illustrated, any number of laser modules **300** may be included.

The components of a given laser module **300** are also shown in FIG. **4**. The laser module **300** includes a plurality of diode lasers **310** each of which are coupled into a respective Ytterbium fiber **312**. The output of the Ytterbium fibers **312** are combined through a fiber combiner **314** which brings the energy together. This energy is fed through a coupler **315** into an Ytterbium fiber optic gain medium **316** which produces therefrom a single mode 1.07 μm output beam. Although three diode laser sets **310** are illustrated any number of diode laser sets **310** may be included.

In one embodiment, the power of continuous wave laser **166** is about 3 kilowatts (kW). In one embodiment, the power level of continuous wave laser **166** is about 5 kW. In one embodiment, the power level of continuous wave laser **166** is about 10 kW. In one embodiment, the power level of continuous wave laser **166** is about 20 kW. In one embodiment, the power level of continuous wave laser **166** is about 50 kW. In one embodiment, the power level of continuous wave laser **166** is between about 3 kW and 20 kW. In one embodiment, the power level of continuous wave laser **166** is at least 3 kW. In one embodiment, the power level of the continuous wave laser **166** is at least 3 kW for a duration of at least about 1 minutes.

Returning to FIG. **1**, the optical energy produced by continuous wave laser **166** is communicated to beam control module **162** through optical conduit **170**. An exemplary optical conduit **170** is a fiber optic cable.

Beam control module **162** includes a beam expander **172** and a positioning system **174**. Beam expander **172** receives the optical energy from optical conduit **170** and provides a generally collimated beam **176** of optical energy which exits modulation device **100**. An exemplary beam expander is a Cassegrain telescope. Optical energy from optical conduit **170** is provided at a focus of the Cassegrain telescope which then generally collimates this optical energy to produce the expanded beam of optical energy **176**. In one embodiment, a path length of beam expander **172** may be automatically adjusted by system controller **154** to change output beam **176** from a generally collimated beam of optical energy to a focused beam of optical energy. In this case, beam expander **172** may serve both as a beam expander (collimator) and focusing optics. In one embodiment, beam control module **162** also includes separate focusing optics **177** which focus the output beam **176** at a given distance from modulation device **100**.

Positioning system **174** alters the direction in which collimated beam **176** is directed. Referring to FIG. **5**, an exemplary configuration of modulation device **100** is shown. Modulation device **100** includes a housing **180** which houses system controller **154**, power system **152**, cooling system **156** and laser source module **160** of optical transmitter system **150**. Provided on a lower side of housing **180** is positioning system **174**. Positioning systems **174** includes a housing **182** coupled to housing **180** and a rotatable head **184** which is rotatable in directions **186** and **188**. In one embodiment, the rotatable head **184** has a pointing accuracy of up to 25 microradians. Rotatable head **184** includes an optical window **190** through which output beam **176** is directed. Output beam **176** is generally a directed beam and is not radiated in all directions. In one embodiment, positioning system **174** also includes at least one reflector **179** which may be controlled to alter the direction output beam **176** in directions **187** and **189**. The reflector **179** may be tilted to alter the elevation of collimated beam **176** by positioning system **174**.

Housing **180**, in the illustrated embodiment, is a pod which is detectably coupled to airplane **102** (see FIG. **2**). Referring to FIG. **5**, housing **180** includes a set of couplers **181** which cooperate with couplers **183** on asset to couple housing **180** to airplane **102**. In one embodiment, housing **180** is coupled to airplane **102** by any suitable conventional mechanism which permits housing **180** to be later detached from airplane **102**. Exemplary coupling systems are disclosed in U.S. patent application Ser. No. 12/541,772, filed Aug. 14, 2009, the disclosure of which is expressly incorporated by reference herein.

Returning to FIG. **1**, power system **152** includes a power source **200**. In one embodiment, power source **200** is a plurality of batteries. The batteries may be rechargable batteries. Exemplary rechargeable batteries include lithium-ion batteries and lithium polymer batteries. Exemplary lithium-ion batteries include commercially available cells, such as those available from A123 Systems located in Watertown, Mass. In one embodiment, a plurality of lithium-ion cells are assembled into a battery pack **202** (see FIG. **5**). In one embodiment, these cells have a nominal amp-hour rating of 2.3 Ah and a nominal load voltage of 3.3 DCV/cell. Based thereon, battery pack **202** should be able to deliver 52.8 V at 2.3 amps for 1 hour. Under high load (10 C (10×5×2.3 or 115 Amps)) the voltage will "squat" to approximately 2.8 volts/cell. At this level the battery pack **202** could deliver 45 V at 115 amps (or 5 kW) for 6 min. Under severe load (20C (20×5*2.3) or 230 amps)) the voltage would squat to approximately 2.5 volts. At this level the battery pack **202** could deliver 40 V at 230 amps (or 9 kW) for about a half minute. In one embodiment, battery pack **202** provides 28 VDC power for modulation device **100**.

The use of battery pack **202** allows high power to be provided to laser source module **160** without causing a large power spike requirement in the power system of asset **102**. In essence, battery pack **202** acts as a capacitor for laser source module **160**.

In one embodiment, continuous wave laser **166** is a three kilowatt Yterrbium single mode fiber laser such as ones commercially available from IPG Photonics located at IPG Photonics Corporation, 50 Old Webster Road Oxford, Mass. 01540 USA and power supply **152** provides about 28 VDC. In general, commercial laser sources from IPG Photonics include an AC-to-DC converter to convert power from an AC source to DC power for continuous wave laser **166**. Since power supply **152** already provides DC power, when a commercial laser source is being used for continuous wave laser **166** the AC-to-DC converter is removed and replaced with a DC driving circuit **320** (see FIGS. **6** and **7**) which corresponds high voltage power supply **164**, DC driving circuit **320** provides power from power supply **152** to continuous agave laser **166** and regulates the power level provided.

Referring to either FIG. **6** or FIG. **7**, continuous wave laser **166** is represented. Continuous wave laser **166**, as explained in connection with FIG. **4**, includes a laser pump system **322** which includes a plurality of laser diodes **310**. Laser diodes **310** provide the pump energy for the lasing medium **316** of continuous wave laser **166**. The lasing medium **316** is provided as part of a fiber optical cable. The output of the lasing medium **316** is provided to optical conduit **170**.

In FIG. **6**, power supply **152** is coupled to laser diodes **183** through DC driving circuit **320** which includes a single volt-

age regulator **326** that powers laser diodes **310**. In FIG. **7**, power supply **152** is coupled to laser diodes **310** through DC driving circuit **320** which includes a plurality of current regulators **328**, Each current regulator **328** provides the power to one of the modules **300** (see FIG. **4**) to provide power to the diodes of that module **300**.

Referring to either FIG. **6** or FIG. **7**, power supply **152** may be charged with a battery charger **330** coupled to a prime power source **332**. Battery charger **330** is contained housing **180**. Exemplary prime power sources include a standard AC wall outlet. Power supply **152** includes a battery management interface **334** which controls the recharging of the batteries with battery charger **330**.

In one embodiment, power system **152** is recharged by a power source **338** of the asset **102**. An exemplary power source **338** is a DC generator of asset **102**. Referring to FIG. **8**, a controller of asset **102** determines if asset **102** is operating and stationary (or otherwise operating at a low power level), as represented by block **350**. The controller checks an operational sensor **352** to determine if asset **102** is operational. Exemplary operational sensors include engine sensors which indicate the operation of propulsion devices **108**. The controller also checks in the case of an airplane **102**, a wheel down sensor **354**, which indicates when the landing gear of airplane **102** is lowered. If the controller determines that airplane **102** is stationary (wheels down) and operational, then the controller provides charging energy to battery charger **330**, as represented by block **356**. In one embodiment, airplane **102** does not need to be stationary, but rather only be operating at a low power level, such as flying at a moderate speed. In this case, the controller monitors a power load of airplane **102** and provides charging energy to battery charger **330** when the power load is below a threshold amount.

Cooling system **156** provides cooling to the other components of modulation device **100**. In one embodiment, cooling system **156** provides cooling to laser source module **160**. In one embodiment, cooling system **156** provides cooling to laser source module **160** and the optical components of beam control module **162**. In one embodiment, cooling system **156** provides cooling fluid to power system **152**, laser source module **160**, and the optical components of beam control module **162**. Cooling system **156** may be either air-cooled or liquid cooled. Exemplary cooling systems are provided from Thermo Tek, Inc. located at 1200 Lakeside Parkway, Suite 200 in Flower Mound, Tex.

As indicated in FIG. **1**, the components of modulation device **100** are coupled to each other and to asset **102** through a digital communication system. In one embodiment, the digital communication system includes a common bus for the components within modulation device **100**. Although a digital communication system is illustrated, any suitable connection is acceptable between the components, such as analog connections. In one embodiment, laser source module **160** is coupled to enable input **143** and fire input **145** through discrete connections outside of the digital communication system. Further, warning/cuing system **130** is coupled to system controller **154** through a separate communication connection. An exemplary communication connection is the MIL-STD-1553 Bus.

Referring to FIG. **9**, in one embodiment, modulation device **100** also includes a target tracking and beam pointing system **210**. Target tracking and beam pointing system **210** monitors the scene surrounding asset **102**. In one embodiment, beam pointing system **210** includes a vision system, illustratively a FLIR system **212**, which provides images of the scene surrounding asset **102**. FLIR system **212**, illustratively, has a separate optical window **178** through which the vision system r Monitors the location of mobile tracking device **110**. In one embodiment, FLIR system **212** uses the same optical window **190** as output beam **176** and is bore sighted to output beam **176**.

Referring to FIGS. **10**A and **10**B, an operation of modulation device **100** is illustrated. Referring to FIG. **10**A, a check is made by a controller **132** of asset **102** whether warning/cuing system **130** is active, as represented by block **360**. Further, warning/cuing system **130** is set to survey mode, as represented by block **362**. In survey mode, warning/cuing system **130** monitors the environment around asset **102** to determine if a mobile tracking device **110** is approaching asset **102**, as represented by block **364**. If a mobile tracking device **110** is detected by warning/cuing system **130**, then the controller **132** of asset **102** determines the coordinates of mobile tracking device **110**, as represented by block **366**. Warning/cuing system **130** may also sound an alarm or provide another indication of mobile tracking device **110** to the operator of asset **102**. Exemplary coordinates for the case when the asset is airplane **102** are the azimuth and elevation angles of mobile tracking device **110** relative to airplane **102**.

The controller **132** of asset **102** passes the coordinates of mobile tracking device **110** to modulation device **100**, as represented by block **368**. Modulation device **100** moves rotatable head **184** to the specified angular position and FLIR system **212** is directed at the specified coordinates. FLIR system **212** may be gimbaled to move independently within housing **180**. The controller **132** of asset **102** determines if mobile tracking device **110** has acquired mobile tracking device **110** with tracking module **210**, as represented by block **370**. If modulation device **100** has not acquired mobile tracking device **110**, new coordinates of mobile tracking device **110** are determined and passed again to modulation device **100**. As such, modulation device **100** remains slaved to controller **132**. If modulation device **100** has acquired mobile tracking device **110** then the initial coordinates corresponding to the lock on location of mobile tracking device **110** are saved by system controller **154**, as represented by block **371**.

Next, system controller **154** of modulation device **100** checks to see if modulation device **100** is authorized to fire continuous wave laser **166**, as represented by block **372**. Continuous wave laser **166** is authorized to fire when fire input **145** is set to fire. If continuous wave laser **166** is not authorized to fire, then an indication of this is provided to the operator of modulation device **100**, as represented by block **374**. Exemplary indications include visual alarms, audio alarms, tactile alarms, and combinations thereof. If continuous wave laser **166** is authorized to fire, then continuous wave laser **166** is fired at mobile tracking device **110**. Beam control module **162** has already adjusted the output direction of collimated beam **176** to coincide with the direction to modulation device **100**.

After modulation device **100** has acquired mobile tracking device **110**, beam pointing system **210** tracks the location of mobile tracking device **110** and updates the coordinates for mobile tracking device **110**, as represented by block **379**. Beam control module **162** rotates and reflector **179** tilts, as necessary, to maintain collimated beam **176** on mobile tracking device **110**.

The position of beam control module **162** is monitored to determine when it has moved a threshold amount, as represented by block **378**. Once mobile tracking device **110** has changed direction by a threshold amount, it no longer is locked on asset **102** and the threat to asset **102** is neutralized. This change in direction of mobile tracking device **110** is indicated by the change in direction of beam control module

162 to keep collimated beam 176 on mobile tracking device 110. Once the threshold amount is reached, continuous wave laser 166 is deactivated as represented by block 381. Control is again passed back to warning/cuing system 130 to monitor for additional mobile tracking devices 110.

In one embodiment, the threshold amount is about 10 degrees in either the azimuth or elevation directions. In one embodiment, the threshold amount is about 5 degrees in either the azimuth or elevation directions. In one embodiment, the threshold amount is about 3 degrees in either the azimuth or elevation directions. In one embodiment, system controller 154 monitors the time since mobile tracking device 110 was acquired by modulation device 100 and deactivates continuous wave laser 166 once a threshold amount of time has passed.

In one embodiment, beam pointing system 210 has a narrower field of view than sensor modules 131 of warning/cuing system 130. As such, sensor modules 131 are able to survey the surrounding environment for mobile tracking device 110 approaching from various directions, while beam pointing system 210 is fixed on the narrow portion of the environment surrounding a detected mobile tracking device 110.

In one embodiment, warning/cuing system 130 is integrated into modulation device 100 and system controller 154 detects the launch of a mobile tracking device 110 based on the images captured by warning/cuing system 130. Although various tasks are discussed as being carried out by one of warning/cuing system 130, controller 132, and system controller 154 these may be carried out by a common controller.

As mentioned herein output beam 176 is produced by a continuous wave laser 166. Output beam 176 is able to defeat mobile tracking devices 110 which modulate the incoming electromagnetic radiation even though output beam 176 is not pulsed and contains no mobile tracking device specific codes. Output beam 176 is also effective against imaging detection systems of more advanced mobile tracking device 110. Exemplary mobile tracking device specific codes include jamming codes.

Referring to FIG. 11, a ship 380 is shown having a rudder 382 and modulation device 100. Also shown is a second ship 384 having a rudder 386 which directs the direction of travel of second ship 384. Second ship 384 also incorporates a mobile tracking device 110. Second ship 384 is attempting to track first ship 380 and close the distance between first ship 380 and second ship 384. Mobile tracking device 110 generates course correction signals for second ship 384 so that second ship 384 continues to dose on first ship 380. In this example, mobile tracking device 110 does not include a separate propulsion system 112 and guidance system 114. Rather, second ship 384 has its own propulsion system, such as an engine, and rudder 386 directs the travel path of second ship 384 based on input from controller 116.

As illustrated in FIG. 3, telescope 120 of mobile tracking device 110 attempts to collect a large amount of electromagnet radiation to extend the viewing range of the modulation device 100. The distance d indicated in FIG. 11, corresponds to a viewing distance of mobile tracking device 110 which is the distance at which mobile tracking device 110 is first able to detect first ship 380. At distances beyond distance d, mobile tracking device 110 is not able to see first ship 380. Of course, mobile tracking device 110 may be closer to first ship 380 than the distance d and in fact over time mobile tracking device 110 tracks first ship 380 so that second ship 384 closes the distance between second ship 384 and first ship 380.

Modulation device 100, upon locking on the position of mobile tracking device 110, fires continuous wave laser 166 such that output beam 176 is received by telescope 120 of mobile tracking device 110. Output beam 176 has different effects on mobile tracking device 110 depending on the separation of mobile tracking device 110 from modulation device 100. Distance d is illustratively divided into three bands, near distance band 392, a mid distance band 394, and a far distance band 396. At distances in near distance band 392, the energy of output beam 176 explodes seeker head 115 and destroys mobile tracking device 110. At distances in mid distance band 394, the energy of output beam 176 destroys the functionality of detector 118. In one example, a modulation device 100 including a 3 kW Yterrbium continuous fiber laser as continuous wave laser 166 destroyed a focal plane array detector of a mobile tracking device 110 at a distance of about 3 kilometers.

At distances in far distance band 396, the energy of output beam 176 produces a plurality of internal localized sources within mobile tracking device 110. These internal localized sources are produced by the energy of output beam 176 being absorbed by the optical components of mobile tracking device 110 which then reradiate the absorbed energy in multiple wavelengths, similar to a blackbody source. Referring to FIG. 3, six internal localized sources 400 are illustrated. Sources 400A and 400B correspond to filter 125. Source 400C corresponds to optical window 128. Source 400D corresponds to secondary mirror 123. Source 400E corresponds to primary mirror 121. Source 400F corresponds to optics 124. The sources 400 may be produced based on the absorption characteristics of the material of each component or the presence of an imperfection in a component. For instance, optical window 128 may become scratched during travel resulting in an imperfection that produces source 400C. Although six sources 400 are illustrated, a single source 400 or other number of sources 400 may be produced at various times.

The source 400 produces infrared energy which is brighter than the infrared signature of asset 102 being tracked by mobile tracking device 110. As such, controller 116 of mobile tracking device 110 interprets the respective source 400 as asset 102 instead of asset 102 itself. If source 400 is off-axis, this will cause controller 116 to try to center source 400 resulting in error signal 129 being increased. Guidance system 114 will then turn mobile tracking device 110 in an attempt to center source 400. This results in mobile tracking device 110 turning away from the location of asset 102. Since source 400 is radiating from a portion of mobile tracking device 110, it cannot be centered. Output beam 176 does not require a mobile device specific code to defeat mobile tracking device 110. Therefore, no knowledge of the modulation scheme of mobile tracking device 110 is required to defeat mobile tracking device 110. In one embodiment, the power level of continuous wave laser 166 is about 3 kW exiting modulation device 100.

Source 400 do not explode mobile tracking device 110, such as what happens in near distance band 392, nor is detector 118 of mobile tracking device 110 destroyed, such as what happens in mid distance band 394. Rather, source 400 confuses controller 116 to believe that one or more (if multiple sources) additional objects are present in the field of view of mobile tracking device 110 with a higher intensity than asset 102. Controller 116 tracks the brightest object in its field of view and thus attempts to track one of sources 400, instead of asset 102.

In far distance band 396, mobile tracking device 110 is not destroyed, but rather sent off course. As mobile tracking device 110 approaches modulation device 100 the power level of output beam 176 increases exponentially resulting in detector 118 being destroyed in mid distance band 394 and/or

mobile tracking device **110** exploding in near distance band **392**. Of course, if mobile tracking device **110** is engaged in far distance band **396** mobile tracking device **110** likely will not enter mid distance band **394** because mobile tracking device **110** will be directed in a different direction due to output beam **176**.

The effects of sources **400** are shown through a comparison of FIGS. **14** and **15** with FIGS. **12** and **13**. Referring to FIG. **12**, a typical response of a mobile tracking device **110** in far distance band **396** is shown. The degree of turn being carried out by a mobile tracking device **110** is proportional to a voltage associated with a gyroscope of the seeker head **115**. In FIG. **12**, a raw voltage of detector **118** is shown as curve **250**. Also shown is the voltage associated with the gyroscope of the seeker head **115** as curve **252**. The amplitude of curve **252** corresponds to error signal **129**. The curve **252** shown in FIG. **12**, represents a mobile tracking device **110** which has locked onto an asset **102** and is following directly behind the asset **102**. The Fourier transform of curve **250** is shown in FIG. **13**. As shown in FIG. **13**, the spectrum **254** for curve **250** is generally tightly defined around 1000 Hz. This is generally consistent with the modulation scheme of the mobile tracking device **110** when it is inline with asset **102**.

Referring to FIG. **14**, a 3 kilowatt, continuous wave, infrared, Ytterbium single mode fiber laser with an m^2 of 1 was used as continuous wave laser **166** of modulation device **100** associated with an asset **102**. In tests, a mobile tracking device **110** was fired at asset **102**. Modulation device **100** directed a continuous beam of optical energy **176** at the optical window **128** of mobile tracking device **110**. The continuous beam of optical energy causes the generation of sources **400** which are falsely recognized by mobile tracking device **110** as asset **102**.

Referring to FIG. **14**, the corresponding curves **250'** and **252'** for the above example are shown. A first portion **260** of curve **250'** (and corresponding portion **262** of curve **252'**) are shown prior to activation of continuous wave laser **166**. As shown by portion **262**, the travel of mobile tracking device **110** is fairly straight. Continuous wave laser **166** is activated at point **264**. This results in detector **118** being flooded with IR energy as represented by the increase in amplitude of curve **250'** and the generation of sources **400**. The generation of sources **400** appears to be later in time potentially indicating the need for the components of mobile tracking device **110** to heat up to cause sources **400**. At portion **264** of curve **252'** controller **116** is instructing guidance system **114** to turn mobile tracking device **110** more aggressively. This increase in turning of mobile tracking device **110** increases in portion **266** even as the intensity of curve **250'** falls in portion **268**. This fall in intensity is indicative of mobile tracking device **110** moving far off course so that not as much of collimated beam **176** enters optical window **128**. As shown in FIG. **15**, the spectrum **254'** for curve **250'** is considerably broadened compared to spectrum **254** of FIG. **12**.

Referring to FIG. **16**, mobile tracking device **110** is traveling in a direction towards asset **102**, as represented by block **410**. This is illustrated in FIG. **2**A wherein an airborne mobile tracking device **110** is shown traveling in direction **412** towards asset **102**. As explained herein, modulation device **100** fires continuous wave laser **166** to direct output beam **176** towards mobile tracking device **110**. This causes the generation of at least one localized source **400** within mobile tracking device **110** which is within a field of view of mobile tracking device **110**. These one or more localized sources **400** are brighter than the infrared energy radiated from asset **102** and are generated at locations which do not correspond with the current direction **412** of mobile tracking device **110**, as represented by block **414** in FIG. **16**. As such, controller **116** attempts to point mobile tracking device **110** at the brighter source **400** and in doing so changes the direction of mobile tracking device **110** to direction **416** as shown in FIG. **2**B. Beam control module **162** alters the direction of output beam **176** to coincide with the new direction of mobile tracking device **110**, as represented by block **420** in FIG. **16**. This again causes the generation of the localized sources **400** within mobile tracking device **110** which are within a field of view of mobile tracking device **110**. As such, controller **116** attempts to point mobile tracking device **110** at the brighter source **400** and in doing so changes the direction of mobile tracking device **110** to direction **422** as shown in FIG. **2**C. Beam control module **162** alters the direction of output beam **176** to coincide with the new direction of mobile tracking device **110**. Once again this causes the generation of the localized sources **400** within mobile tracking device **110** which are within a field of view of mobile tracking device **110**. As such, controller **116** attempts to point mobile tracking device **110** at the brighter source **400** and in doing so changes the direction of mobile tracking device **110** to direction **424** as shown in FIG. **20**. In moving beam control module **162** to track mobile tracking device **110** along the direction **424**, rotatable head **184** exceeds the threshold rotation amount and continuous wave laser **166** is deactivated, as shown in FIG. **20**.

Unlike prior art devices, modulation device **100** is not mobile tracking device **110** specific. Rather, modulation device **100** is effective against both imaging and non-imaging mobile tracking devices **110**. Further, modulation device **100** does not require a mobile device specific code to be known in advance. Rather, modulation device **100** relies on the continuous provision of optical energy into mobile tracking device **110** to produce localized sources **400** within the field of view of mobile tracking device **110** such that detector **118** is confused as to the location of asset **102**.

In another example of the use of modulation device **100**, a 3 kW. continuous wave, infrared, Ytterbium single mode fiber laser was used as continuous wave laser **166** of modulation device **100** associated with an asset **102**. In tests, a plurality of different mobile infrared mobile tracking devices **110** were fired at asset **102** while asset **102** was at ground level. Modulation device each time directed output beam **176** at the optical window of the respective mobile tracking device **110**. The modulation device **100** was effective against all of the plurality of different mobile tracking device **110** at a range of up to about 1250 meters from modulation device **100**. A computer model was made wherein asset **102** was at ground level, a wavelength of continuous wave laser **166** was set to 1.07 μm, and values for additional parameters modulation device **100** and mobile tracking device **110** were set. The computer model provided a predicted range of up to 1290 meters for a plurality of different mobile tracking device **110**. This computer model demonstrated good agreement with the experimentally obtained range of up to 1250 meters.

In a further example of the use of modulation device **100**, a 3 kilowatt, continuous wave, infrared, Ytterbium single mode fiber laser was used as continuous wave laser **166** of modulation device **100** associated with an asset **102**. In tests, a specific mobile tracking device **110** was fired at asset **102** while asset **102** was at ground level. Modulation device **100** directed output beam **176** at the optical window of mobile tracking device **110**. The modulation device **100** was effective against the specific mobile tracking device **110** at a range of up to about 2650 meters from modulation device **100**. The above-mentioned computer model provided a predicted range of up to 2440 meters for the specific mobile tracking

device **110**. This demonstrates good agreement with the experimentally obtained range of up to 2650 meters.

Returning to FIG. **9**, in one embodiment, beam pointing system **210** further includes a laser designator system **214**. Laser designator system **214** includes a pulsed laser which is directed at mobile tracking device **110** and reflected therefrom. Based on the reflected signal, laser designator system **214** is able to determine a distance from modulation device **100** to mobile tracking device **110**. In the case wherein modulation device **100** includes focusing optics **177** or wherein beam expander **172** may be focused, one of system controller **154** and beam pointing system **210** adjusts a focal length of focusing optics **177** to focus output beam **176** at the location of mobile tracking device **110**. In one embodiment, output beam **176** is focused at a distance shorter than the determined range to mobile tracking device **110**, the distance being chosen based on an estimated speed of mobile tracking device **110**. In one embodiment, this distance corresponds to the expected position of mobile tracking device **110** based on assumptions regarding the relative difference in speed between asset **102** and mobile tracking device **110**. In one embodiment, the estimated speed of mobile tracking device **110** is selected based on the type of mobile tracking device **110** which is identified based on a retro-reflection received from mobile tracking device **110**.

Laser designator system **214**, illustratively, has a separate optical window **215** through which the laser beam of laser designator system **214** is sent out of modulation device **100** and the reflection from mobile tracking device **110** is received to determine the distance to mobile tracking device **110**. In one embodiment, laser designator system **214** uses the same optical window **190** as output beam **176** and is bore sighted to output beam **176**.

Referring to FIG. **28**, in one embodiment, the optical transmitter system **150** of modulation device **100** includes a laser source **600**. Laser source **600** includes a plurality of semiconductor lasers **602-606** which produce optical energy for modulation device **100**. In one embodiment, the semiconductor lasers are continuous wave lasers. In one embodiment, lasers **602-606** are quantum cascade lasers. Exemplary quantum cascade lasers include External Cavity Quantum Cascade Lasers available from Daylight Solutions located at 13029 Danielson Street, Suite 130 in Poway, Calif. and Pranalytica located at 1101 Colorado Avenue in Santa Monica, Calif. In one embodiment, the semiconductor lasers have a wavelength of at least about 1 um. In one embodiment, the semiconductor lasers have a wavelength of at least about 2 um.

The output optical energy of each of lasers **602-606** is carried through respective optical conduits **608-612** to beam control module **162**. The end of the respective optical conduits **608-612** are positioned generally at a focus of beam expander **172**. Beam control unit **162** sends the optical energy produced by each of lasers **602-606** towards mobile tracking device **110**. The optical energy of lasers **602-606** is generally incoherently combined to produce a beam with a power level sufficient to function in the same manner as continuous wave laser **166**.

In one embodiment, lasers **602-606** combine to produce about 3 kW of power. In one embodiment, the power level of the combined lasers **602-606** is about 5 kW. In one embodiment, the power level of the combined lasers **602-606** is about 10 kW. In one embodiment, the power level of the combined lasers **602-606** is about 20 kW. In one embodiment, the power level of the combined lasers **602-606** is about 50 kW. In one embodiment, the power level of the combined lasers **602-606** is between about 3 kW and 20 kW. In one embodiment, the power level of the combined lasers **602-606** is at least 3 kW. In one embodiment, the power level of the combined lasers **602-606** is at least 3 kW for a duration of at least about 11 minutes. The combined lasers **602-606** may be used together to form the output beam of modulation device **100**. In one embodiment, the output beam of modulation device **100** is at least about 60 kW. In one embodiment, the output beam of modulation device **100** is in the range of about 60 kW to about 100 kW.

By using multiple semiconductor lasers, as opposed to a single high power laser, the amount of heat management needed is greatly reduced because the individual semiconductor lasers collectively do not generate the same amount of heat as the high power laser **166**.

Referring to FIG. **17**, a portable cutting device **700** is shown. The portable cutting device **700** includes a laser source **702**, a power supply **704**, a storage container **706**, and a laser directing device **708**. Portable cutting device **700** may be used in multiple applications for cutting through materials. Exemplary materials include wood, masonry, metal, and other materials. Portable cutting device **700** does not require an internal combustion generator and therefore does not have the associated noise and exhaust issues.

A cooling unit **711** may optionally be provided to actively cool one or both of laser source **702** and power supply **704**. In one embodiment, cooling unit **711** is an air-cooled chiller. In one embodiment, cooling unit **711** is a thereto-electric cooling system. In one embodiment, cooling unit **711** is an on-demand cooler which directs cooling air at the optical coupler which couples laser source **702** to optical conduit **730**. The on-demand cooler may be manually activated or activated based on a monitored temperature sensor value. The cooling air of the on-demand cooler is a non-flammable gas.

In one embodiment, storage container **706** is a backpack, such as backpack **710** shown in FIG. **18**. Backpack **710** is worn by a human operator **720**. Backpack **710** includes a cargo carrying portion **712** and two straps **714** which are positioned over the shoulders of the human operator **720** and extend under the arms of the human operator **720**. Backpack **710** is positioned on the back side of the human operator **720**. In one embodiment, storage container **706** is positioned on a front side of the human operator **720**. In one embodiment, storage container **706** is positioned to either a left side or a right side of the human operator **720**. In one embodiment, storage container **706** is positioned on at least two of a back side, a left side, a front side, and a right side of the human operator **720**.

In one embodiment, laser source **702**, power supply **704**, and controller **705** are positioned within cargo carrying portion **712** of backpack **710** for transport by human operator **720**. Referring to FIG. **18**A, cargo carrying portion **712** is represented. Cargo carrying portion **712** includes a first portion **740** and a second portion **742** which cooperate to form an interior space of cargo carrying portion **712**. In one embodiment, cargo carrying portion **712** is made of a flexible material and first portion **740** and second portion **742** are secured together with one or more suitable fasteners **744**. Exemplary fasteners include zippers, snaps, and other suitable fasteners. In one embodiment, first portion **740** and second portion **742** are integrally formed and are seperatable only along a portion, such as the left side, top side, and right side. In one embodiment, cargo carrying portion **712** is a hard case and first portion **740** and second portion **742** are secured together with one or more suitable fasteners **744**. Exemplary fasteners include latches and other suitable fasteners. Regardless of the configuration, first portion **740** and second portion **742** cooperate to provide a closed space for carrying laser source **702**,

power supply **704**, controller **705**, and, optionally, cooling unit **711** during transport and the ability to open at least a portion of cargo carrying portion **712** to access laser source **702**, power supply **704**, controller **705**, or cooling unit **711**, such as to replace the batteries of power supply **704**.

Laser directing device **708** is held by the human operator **720**. Laser directing device **708** includes a stock portion **750** which may be positioned next to the shoulder of human operator **720**. Laser directing device **708** also includes a handle **752** whereby the hand of the operator may carry laser directing device **708** and a grip **754** which human operator **720** may grasp during operation of portable cutting device **700**.

Laser directing device **708** is coupled to laser source **702** through an optical conduit **730**. Exemplary optical conduits include fiber optic cable. Laser directing device **708** also includes an optical conduit **756** which is coupled to optical conduit **730**. Optical energy generated by laser source **702** travels through optical conduit **730** and optical conduit **756** and is discharged through an end **758** of laser directing device **708** towards a barrier **736** (see FIG. **18**). The energy discharged by laser directing device **708** is of sufficient strength to cut the material of barrier **736**. Laser directing device **708** includes an optical system **810** which shapes the energy exiting optical conduit **756** of laser directing device **708** to focus it at a focus **814**. Focusing optics **760** concentrate the energy onto a defined location on the barrier **736**.

Returning to FIG. **18**A, optical conduit **730** is coupled to laser source **702** at a location in the interior of cargo carrying portion **712**. Optical conduit **730** extends through a wall of cargo carrying portion **712** and is coupled to laser directing device **708** outside of storage container **706** at optical connector **806** (see FIG. **21**). In one embodiment, optical conduit **730** couples to laser directing device **708** through grip **754**.

Optical conduit **730** is provided in a protective sheath **732**. The protective sheath **732** should have a high thermal conductivity and limit a bend radius of optical conduit **730**. In one embodiment, protective sheath **732** is made of segmented pieces of metal coupled together. Also included with protective sheath **732** is an electrical control and signal cable **734** which couples controller **705** with components of laser directing device **708**. In one embodiment, controller **705** is coupled to a controller **830** of laser directing device **708**. In one embodiment, controller **705** is coupled to controller **830** over through a standard RS-232 or RS-422 interface. In one embodiment, signal cable **734** is an optical fiber and controller **705** communicates with controller **830** via any type of standard protocol, such as Internet protocol. As explained herein, controller **830** interfaces with the operator **720**, the components of laser directing device **708**, and monitors sensors associated with laser directing device **708**. Controller **830** then communicates this information to controller **705** which controls the operation of laser source **702**.

Laser source **702**, in one embodiment, is a continuous wave laser. In one embodiment, laser source **702** is a fiber laser. In one embodiment, laser source **702** is a continuous wave Ytterbium single mode fiber laser. Exemplary continuous wave single mode fiber lasers are provided by IPG Laser GmBH located at 50 Old Webster Road in Oxford, Mass. 01540. Details regarding an exemplary laser source **702** are provided in U.S. patent application Ser. No. 11/973,437, titled POWERFUL FIBER LASER SYSTEM, assigned to IPG Photonics Corporation, the disclosure of which is expressly incorporated by reference herein. Details regarding an exemplary laser source **702** are provided in U.S. patent application Ser. No. 11/611,247, titled FIBER LASER WITH LARGE MODE AREA FIBER, assigned to IPG Photonics Corporation, the disclosure of which is expressly incorporated by reference herein. In one embodiment, laser source **702** is a solid state laser.

Referring to FIG. **27**, an exemplary configuration of laser source **702** is shown. Laser source **702** includes a plurality of individual modules **900** each of which provide a single mode 1.07 micrometer output beam. The output of each of modules **900** is combined together through a module combiner **903** which brings the energy together in a single beam. This combined beam is coupled to optical conduit **730** through a quartz coupler **904**. Although three laser modules **900** are illustrated any number of laser modules **900** may be included.

The components of a given laser module **900** are also shown in FIG. **27**. The laser module **900** includes a plurality of diode lasers **910** each of which are coupled into a respective Ytterbium fiber **912**. The output of the Ytterbium fibers **912** are combined through a fiber combiner **914** which brings the energy together. This energy is fed through a coupler **915** into an Ytterbium fiber optic gain medium **916** which produces there from a single mode 1.07 micrometer output beam. Although three diode laser sets **910** are illustrated any number of diode laser sets **910** may be included.

In one embodiment, the power of laser source **702** is about 3 kilowatts. In one embodiment, the power level of laser source **702** is about 5 kilowatts. In one embodiment, the power level of laser source **702** is about 10 kilowatts. In one embodiment, the power level of laser source **702** is about 20 kilowatts. In one embodiment, the power level of laser source **702** is about 50 kilowatts. In one embodiment, the power level of laser source **702** is between about 3 kilowatts and 20 kilowatts. In one embodiment, the power level of laser source **702** is at least 3 kilowatts.

In one embodiment, power supply **704** is a portable power supply. An exemplary portable power supply is one or more batteries, such as rechargeable batteries. Exemplary rechargeable batteries include lithium-ion batteries and lithium polymer batteries. Exemplary lithium-ion batteries include commercially available cells, such as those available from A123 Systems located in Watertown, Mass. In one embodiment, the cells have a nominal amp-hour rating of 2.3 Ah and a nominal load voltage of 3.3 DCV/cell. Further exemplary lithium-ion batteries include commercially available cells available from SAFT America, Inc. located at 313 Crescent St Ne in Valdese, N.C. in Watertown, Mass. In one embodiment, the cells have a nominal maximum current of 500 A, a specific power of 5.1 kW/kg, a specific energy of 430 kJ/kg, and a mass of 0.94 kg.

Referring to FIG. **19**, multiple battery packs **770** are coupled together in series to produce power supply **704**. Each of lithium-ion battery pack **770** delivers about 5 kilowatts of power for about six minutes. Since two units are shown coupled together in FIG. **19**, the resultant power supply **704** can deliver about 10 kilowatts of power. Each of lithium-ion battery pack **770** includes multiple individual lithium-ion batteries. In one embodiment, lithium-ion battery pack **770** commercially available cells available from A123 Systems located in Watertown, Mass. The two lithium-ion battery packs **770** together weigh about 28 pounds (13.6 kg).

Referring to FIG. **20**, multiple lithium polymer batteries **772** are coupled together in series to produce power supply **704**. Each of lithium polymer batteries **772** delivers about 4.5 kilowatts of power for about two minutes. Since eight units are shown coupled together in FIG. **20**, the resultant power supply **704** can deliver about 13 kilowatts of power for about six minutes. The eight lithium polymer batteries **772** together weigh about 21 pounds (9.6 kg).

In one embodiment, laser source **702** is a three kilowatt Yterrbium single mode fiber laser such as ones commercially available from IPG Photonics located at IPG Photonics Corporation, 50 Old Webster Road Oxford, Mass. 01540 USA and power supply **704** is as shown in FIG. **20**. This combination results in portable cutting device **700** having a cutting speed of about fifty inches per minute for 0.5 inch thick steel. This combination may cut up to 900 inches of material on a single charge of power supply **704**, arranged as shown in FIG. **20**. In general, commercial laser sources include an AC-to-DC converter to convert power from an AC source to DC power for laser source **702**. Since power supply **704** already provides DC power, when a commercial laser source is being used the AC-to-DC converter is removed and replaced with DC driving circuit **780**. DC driving circuit **780** provides power from power supply **704** to laser source **702** and regulates the power level provided. In a similar fashion, commercial laser sources often include cooling lines to cool the laser source and over-temperature sensors to monitor the temperature of the laser source. In one embodiment, when a commercial laser source is being used the cooling lines are removed and the over-temperature sensors of the commercial laser source are overridden. With this arrangement and using the laser directing device **708** represented in FIG. **21**, laser directing device **708** was operated at 3 kW power for 720 seconds without disabling the laser source **702**.

Referring to either FIG. **25** or FIG. **26**, laser source **702** is represented. Laser source **702** includes a laser pump system **782** which includes a plurality of laser diodes **783**. Laser diodes **783** provide the pump energy for the lasing medium **784** of laser source **702**. The laser diodes **783** are divided into a plurality of modules. In one embodiment, 42 diodes are provided in a single module and seven modules are provided. The lasing medium **784** is provided as part of a fiber optical cable. The output of the lasing medium **784** is provided to optical conduit **730**.

In FIG. **25**, power supply **704** is coupled to laser diodes **783** through DC driving circuit **780** which includes a single voltage regulator **781** that powers laser diodes **783**. In FIG. **26**, power supply **704** is coupled to laser diodes **783** through DC driving circuit **780** which includes a plurality of current regulators **786**. Each current regulator **786** provides the power to one of the modules to provide power to the diodes of that module.

Referring to either FIG. **25** or FIG. **26**, power supply **704** may be charged with a battery charger **788** coupled to prime power source **790**. Exemplary prime power sources include a standard AC wall outlet or an alternator of a vehicle. Power supply **704** includes a battery management interface **792** which controls the recharging of the batteries with battery charger **788**.

Referring to FIG. **21**, an exemplary embodiment of laser directing device **708** is shown. Laser directing device **708** has a body **802** with a downwardly extending handle **804**. Optical conduit **730** is coupled to an optical connector **806** which couples optical conduit **730** to optical conduit **808**. Optical conduit **808** is coupled to a collimating chamber **810**.

Collimating chamber **810** includes an optical system **812** which focuses light carried by optical conduit **808** at a focus **814** generally corresponding to the location of barrier **736**. In one embodiment, the focal range of laser directing device **708** is from about six inches from end **758** to about sixty feet from end **758**. In one embodiment, the focal range of laser directing device **708** is from about six inches from end **758** to about three kilometers from end **758**.

In the illustrated embodiment, optical system **812** includes a first lens **816** and a second lens **818**. First lens **816** receives the light from optical conduit **808** which acts like a point source. In the illustrated embodiment, first lens **816** is positioned such that an end **820** of optical conduit **808** is located at a focus of first lens **816** which results in a generally collimated beam **822** being produced inside of collimating chamber **810**. Second lens **818** focuses collimated beam **822** at barrier **736**. Although a two lens system is shown, other lens systems may be used to focus the light at focus **814**.

The position of one or both of first lens **816** and second lens **818** may be altered relative to the position of end **820** of optical conduit **808** or the other of first lens **816** and second lens **818** to change the location of focus **814**. In one embodiment, a portion of collimating chamber **810** is moveable relative to the remainder of collimating chamber **810** to allow an operator to manually adjust the relative spacing of first lens **816** and second lens **818** similar to a scope on a rifle. In one embodiment, first lens **816** is positioned on a moveable stand **824** and second lens **818** is positioned on a moveable stand **826**. Both of moveable stand **824** and moveable stand **826** are controlled through respective motors to adjust the position of the respective first lens **816** and second lens **818**.

The motors are controlled by a controller **830** of laser directing device **708**. In one embodiment, controller **830** receives an input from an operator control (not shown) through which the operator specifies the desired position of focus **814**. In one embodiment, controller **830** receives an input from a laser rangefinder **840** which determines the distance d from laser directing device **708** to barrier **736**. Based on e determined distance d, controller **830** moves one or both of first lens **816** and second lens **818** to place focus **814** at distance d. In one embodiment, other locating devices may be used, such as GPS systems.

In one embodiment, instead of or in addition to a laser range finder device **840** includes a visible guide laser which provides a visible marker for the operator of where laser directing device **708** is going to cut. The visible guide laser should be collinear with an axis of collimating chamber **810**. In one example, the visible guide laser is a HeNe laser. In one embodiment, laser source **702** acts as a guide laser. The operator wears goggles which can detect and provide a visible image of the barrier and the laser source at the barrier. In this embodiment, the laser source can be set to a low power setting to align with barrier and then set to a high power setting to cut barrier.

Laser directing device **708** also includes a compressed gas container **850** which provides air to a regulator valve **852** through a conduit **854**. Regulator valve **852** provides gas to a nozzle **856** through a conduit **857**. Nozzle **856** directs gas **858** at focus **814**. In one embodiment, the position of nozzle **856** is adjustable. The gas blows molten material produced during cutting away from laser directing device **708**, the operator, and away from barrier **736**. Controller **830** controls regulator valve **852** to place conduit **857** in fluid communication with conduit **854** when a trigger **860** of laser directing device **708** is pulled by the operator. In one embodiment, the gas stored in compressed gas container **850** is a non-flammable gas. Exemplary gases include freon, nitrogen, argon, and other non-flammable gases.

Controller **830** also controls regulator valve **852** to place conduit **854** in fluid communication with a fluid conduit **862**. Fluid conduit **862** terminates at a fluid inlet **864** to collimating chamber **810**. The gas presented to collimating chamber **810** cools first lens **816** and second lens **818** from the heat generated by the light from optical conduit **808**. Warmer gas in collimating chamber **810** is exhausted through a fluid outlet **866** of collimating chamber **810**. In one embodiment, controller **830** controls regulator valve **852** to provide gas to fluid

conduit **862** whenever trigger **860** is pulled. In one embodiment, controller **830** controls regulator valve **852** to provide gas to fluid conduit **862** when a temperature sensor monitoring collimating chamber **810** detects an elevated temperature.

Laser directing device **708** further includes a sensor **870** which monitors for light having generally the same wavelength provided by laser directing device **708** at focus **814**. Sensor **870** monitors the intensity of the light reflected from barrier **736**. Referring to FIG. **22**A, when laser directing device **708** is generally normal to barrier **736**, the light (represented by arrow **872**) focused by laser directing device **708** strikes barrier **736** generally normal to barrier **736**. A portion of the light (represented by arrow **874**) is reflected by barrier **736**. Often the reflected portion is small compared to the portion which interacts with barrier **736** to cut barrier **736** and as such does not pose a threat to the operator. However, when barrier **736** is more reflective the strength of the reflected portion increases. When a 1.07 micrometer wavelength beam is used, irradiance levels of about 5 milli-watts per square centimeter (mW/cm^2) pose a threat to the operator at any range less than 77 km, such as damage to the retina of the eye. At wavelengths less than 1.55 micrometer, light is transmitted into the eye which can damage the retina. In one embodiment, a laser source **702** having a wavelength of at least 1.55 micrometer is used. In one embodiment, a laser source **702** having a wavelength of about 2.0 micrometer is used. At wavelengths of 1.55 micrometer and greater, damage to the cornea of the eye is the concern. Since the cornea heals quite easily and the retina is generally permanently damaged, wavelengths which are absorbed by the cornea and not transmitted are considered to be "eye safe".

By monitoring the irradiance levels of the reflected portion with sensor **870**, controller **830** may make a determination of actions to take. In one embodiment, if the irradiance levels of the reflected portion are above a first threshold, controller **830** sends an instruction to controller **705** to shut down laser source **702**. In one embodiment, the first threshold is about 2.5 mW/cm^2.

In one embodiment, if the irradiance levels of the reflected portion are above a first threshold, controller **830** sounds an alarm which provides an indication to the operator that the irradiance levels of the reflected portion are elevated, but not at a threatening level. The operator may then move to the arrangement shown in FIG. **22**B, wherein the light represented by arrow **872** is not normal to barrier **736**; thereby causing the reflected light represented by arrow **874** to not be returned to sensor **870**. However, if the irradiance levels are above a second threshold, controller **830** sends an instruction to controller **705** to shut laser source **702** down. In one embodiment, the first threshold is about 2.0 mW/cm^2 and second threshold is about 2.5 mW/cm^2.

This control sequence is represented in FIG. **23**. The irradiance level of the reflected portion is monitored with sensor **870**, as represented by block **880**. The irradiance level is compared to a first threshold, as represented by block **882**. If the irradiance level is below the first threshold, no action is taken and the irradiance level of the reflected portion is continued to be monitored with sensor **870**. If the irradiance level is at or above the first threshold, then the irradiance level is compared to a second threshold, as represented by block **884**. If the irradiance level is not at or above the second threshold, then an alarm is sounded, as represented by block **886**. This informs the operator that irradiance levels are elevated and that action should be taken, such as changing the angle of incidence relative to barrier **736**. Exemplary alarms include audio alarms (such as speakers), visual alarms (such as lights), tactile alarms (such as vibrating members), or combinations thereof. If the irradiance level is at or above the second threshold, then laser source **702** is deactivated, as represented by block **888**.

Returning to FIG. **21**, laser directing device **708** further includes a safety switch **901** and a laser power setting switch **902**. Safety switch **901** provides a safety in case the operator inadvertently pulls trigger **860**. Safety switch **901** may be a toggle switch, a dial, or any other suitable input device. Laser power setting switch **902** provides an indication of the desired power level of laser source **702**. By running laser source **702** at lower power levels for applications not requiring high power settings, the charge life of power supply **704** may be extended. Laser power setting switch **902** may be any type of input devices which provides multiple settings, each corresponding to a particular power level. An exemplary input device is a dial. In one embodiment, the power level of laser source **702** may be adjusted from 0% to 100%.

Referring to FIG. **24**, an exemplary operation sequence for laser directing device **708** is provided. A request is received by controller **830** to set the desired power level of laser source **702**, as represented by block **912**. For laser directing device **708**, the request to set the desired power level of laser source **702** is the setting of laser power setting switch **902**. Controller **830** sends an instruction to controller **705** to activate laser source **702** at the desired power level, as represented by block **914**.

Controller **830** receives a request to fire laser source **702**, as represented by block **916**. For laser directing device **708**, the request to fire laser source **702** is the pulling of trigger **860** which is monitored by controller **830**. Controller **830** checks to see if the safety switch **901** is off, as represented by block **918**. For laser directing device **708**, the state of safety switch **901** is checked. If the safety switch is on, an alarm is provided to alert the operator that the safety is on, as represented by block **920**. Exemplary alarms include audio alarms (such as speakers), visual alarms (such as lights), tactile alarms (such as vibrating members), or combinations thereof. If the safety switch is off, then controller **830** sends an instruction to controller **705** to fire laser source **702**, as represented by block **922**.

While laser source **702** is being fired, the monitoring sequence of FIG. **23** is carried out, as represented by block **924**. Controller **830** receives a request to deactivate laser source **702**, as represented by block **926**. For laser directing device **708**, the request to deactivate laser source **702** is the release of trigger **860** which is monitored by controller **830**. Controller **830** sends an instruction to controller **705** to deactivate laser source **702**, as represented by block **928**.

With trigger **860** pulled, operator **720** moves laser directing device **708** with his/her arms to define the cutting path of laser directing device **708**. As such, laser directing device **708** may be moved by human operator **720** without the need to also move laser source **702**. This flexibility is provided in part by the flexibility of optical conduit **730**. As represented in FIG. **18**, a planned cutting path **762** is shown including a first portion **764** which has already been cut. Once cutting is complete, portable cutting device **700** may be powered off, by letting trigger **860** released. In between cutting operations, power supply **704** may be recharged or replaced.

Referring to FIG. **29**, in one embodiment, the laser source **702** of portable cutting device **700** includes a laser source **620**. Laser source **620** includes a plurality of semiconductor lasers **622-626** which produce optical energy for portable cutting device **700**. In one embodiment, the semiconductor lasers are continuous wave lasers. In one embodiment, lasers **622-626** are quantum cascade lasers. Exemplary quantum cascade lasers include External Cavity Quantum Cascade Lasers

available from Daylight Solutions located at 13029 Danielson Street, Suite 130 in Poway, Calif. and Pranalytica located at 1101 Colorado Avenue in Santa Monica, Calif. In one embodiment, the semiconductor lasers have a wavelength of at least about 1 um. In one embodiment, the semiconductor lasers have a wavelength of at least about 2 um.

The output optical energy of each of lasers **622-626** is carried through respective optical conduits **628-632**. In one embodiment, the output of each of optical conduits **628-632** is combined and passes through optical conduit **730** to laser directing device **708**. In the illustrated embodiment, each of optical conduits **628-632** pass through optical conduit **730**. In this example, the end of each of optical conduits **628-632** generally coincide with optical connector **806**. optical conduit **756** then propagates the optical energy to optical system **812** which outputs the optical energy from laser directing device **708**. The optical energy of lasers **602-606** is generally incoherently combined to produce a beam with a power level sufficient to function in the same manner as laser source **702**. In one embodiment, the power of the combined lasers **602-606** is about 3 kilowatts. In one embodiment, the power level of combined lasers **602-606** is about 5 kilowatts. In one embodiment, the power level of combined lasers **602-606** is about 10 kilowatts. In one embodiment, the power level of combined lasers **602-606** is about 20 kilowatts. In one embodiment, the power level of combined lasers **602-606** is about 50 kilowatts. In one embodiment, the power level of combined lasers **602-606** is between about 3 kilowatts and 20 kilowatts. In one embodiment, the power level of combined lasers **602-606** is at least 3 kilowatts.

In one embodiment, portable cutting device **700** is mounted to a moveable platform so that portable cutting device **700** is positionable relative to various objects to be cut or removed without having to be held by an operator. The portable cutting device may be fired at an object having a first hardness. Subsequent to firing, the hardness of the object is reduced it is believed due to the interaction of the optical energy produced by portable cutting device **700** and the object. Once the hardness of the object has been reduced a mechanical tool may be used to remove at least portions of the object. In one example, the portable cutting device **700** is lowered into a well shaft and fired at rock in the well shaft to reduce the hardness of the rock. Subsequent thereto, a mechanical drill is used to further breakup and remove the rock from the well shaft.

Although the disclosed systems have included laser systems with wavelengths in the infrared spectrum, the teaching presented herein may also be used with laser systems with wavelengths in the visible spectrum or ultraviolet spectrum.

While this invention has been described as having an exemplary design, the present invention may be further modified within the spirit and scope of this disclosure. This application is therefore intended to cover any variations, uses, or adaptations of the invention using its general principles. Further, this application is intended to cover such departures from the present disclosure as come within known or customary practice in the art to which this invention pertains.

The invention claimed is:

1. A portable cutting device for transport by a human operator, comprising:

a laser source which provides optical energy, the laser source being a plurality of continuous wave semiconductor lasers whose output is combined to provide the optical energy;

a battery power source;

a laser directing device supporting focusing optics in a collimating chamber, the focusing optics focus the optical energy provided by the laser source;

at least one storage container, the at least one storage container housing the laser source and the battery power source; and

at least one flexible optical conduit extending from an interior of the at least one storage container to the laser directing device, the at least one flexible optical conduit communicating the optical energy produced by the laser source to the laser directing device;

wherein the at least one storage container includes a backpack which includes a cargo carrying portion housing the battery power source and the laser source and support straps through which arms of the human operator extend.

2. The portable cutting device of claim **1**, wherein the plurality of continuous wave semiconductor lasers are quantum cascade lasers.

3. The portable cutting device of claim **2**, wherein a power level of the optical energy provided by the laser source is at least 3 kilowatts.

4. A portable cutting device for transport by a human operator, comprising:

a laser source which provides optical energy, the laser source being a plurality of continuous wave semiconductor lasers whose output is combined to provide the optical energy;

a battery power source;

a laser directing device supporting focusing optics in a collimating chamber, the focusing optics focus the optical energy provided by the laser source;

at least one storage container, the at least one storage container housing the laser source and the battery power source; and

at least one flexible optical conduit extending from an interior of the at least one storage container to the laser directing device, the at least one flexible optical conduit communicating the optical energy produced by the laser source to the laser directing device;

wherein the laser directing device includes a controller, a trigger, a compressed air container, a valve in fluid communication with the compressed air container, and a nozzle directed at a focus of the focusing optics and in fluid communication with the valve.

5. The portable cutting device of claim **4**, wherein the valve is opened by the controller based on a status of the trigger to provide an air stream generally towards the focus of the focusing optics.

6. The portable cutting device of claim **4**, wherein the laser directing device further includes a second fluid conduit in communication with the valve and in fluid communication with the collimating chamber, the controller controlling the valve to provide air from the compressed air container to the collimating chamber.

* * * * *