US008305252B2

(12) **United States Patent**
Bradley

(10) **Patent No.: US 8,305,252 B2**
(45) **Date of Patent: Nov. 6, 2012**

(54) **COUNTERMEASURE DEVICE FOR A MOBILE TRACKING DEVICE**

(75) Inventor: **Timothy Bradley**, Loogootee, IN (US)

(73) Assignee: **The United States of America as represented by the Secretary of the Navy**, Washington, DC (US)

(*) Notice: Subject to any disclaimer, the term of this patent is extended or adjusted under 35 U.S.C. 154(b) by 57 days.

(21) Appl. No.: **12/541,772**

(22) Filed: **Aug. 14, 2009**

(65) **Prior Publication Data**

US 2011/0036998 A1 Feb. 17, 2011

(51) **Int. Cl.**

H04K 3/00	(2006.01)
G01S 7/38	(2006.01)
G01S 7/495	(2006.01)
G01S 7/00	(2006.01)
F41G 7/22	(2006.01)

(52) **U.S. Cl.** **342/14**; 242/13; 242/52; 242/53; 242/54; 455/1; 244/3.1; 244/3.15; 244/3.16; 398/39; 372/109

(58) **Field of Classification Search** ..... 455/1; 89/1.11; 244/3.1–3.19, 1 R, 118.2, 129.1, 137.4; 342/13–20, 342/52–56, 59, 61–68, 73–81, 175; 250/493.1–504 H, 200, 206, 206.1–206.3; 356/3, 4.01, 27, 356/28; 701/1, 3; 398/39; 372/109
See application file for complete search history.

(56) **References Cited**

U.S. PATENT DOCUMENTS

4,575,786 A * 3/1986 Roberts ..... 250/504 R
4,838,167 A * 6/1989 Prahauser et al. 250/495.1
4,905,937 A * 3/1990 Spotswood et al. 244/137.4
5,142,288 A 8/1992 Cleveland
5,198,607 A 3/1993 Livingston et al.
5,378,155 A * 1/1995 Eldridge 342/14
5,401,171 A 3/1995 Paghdiwala
5,600,434 A 2/1997 Warm et al.
5,742,384 A * 4/1998 Farmer ..... 250/504 R
5,780,807 A 7/1998 Saunders
5,793,476 A * 8/1998 Laakmann et al. 356/28
5,793,477 A * 8/1998 Laakmann 342/14

(Continued)

FOREIGN PATENT DOCUMENTS

FR 2318453 A * 3/1977

(Continued)

OTHER PUBLICATIONS

Brown, J.M., "Digital Model of a Generic Infrared Tracker," Thesis in partial fulfillment of requirements for Master of Science in Electrical Engineering, May 1992, cover and pp. i-vii, 1-26, and 66-71 (available in Library of Rose Hulman Institute of Technology), Indiana.

(Continued)

Primary Examiner — Bernarr Gregory

(74) *Attorney, Agent, or Firm* — Christopher A. Monsey

(57) **ABSTRACT**

A countermeasure device for directing a mobile tracking device away from an asset is provided. The countermeasure device includes a continuous wave laser source whose output is directed at a seeker head of the mobile tracking device. The countermeasure device causes the generation of localized sources within the mobile tracking device and confuses the mobile tracking device as to the true location of the asset.

15 Claims, 20 Drawing Sheets

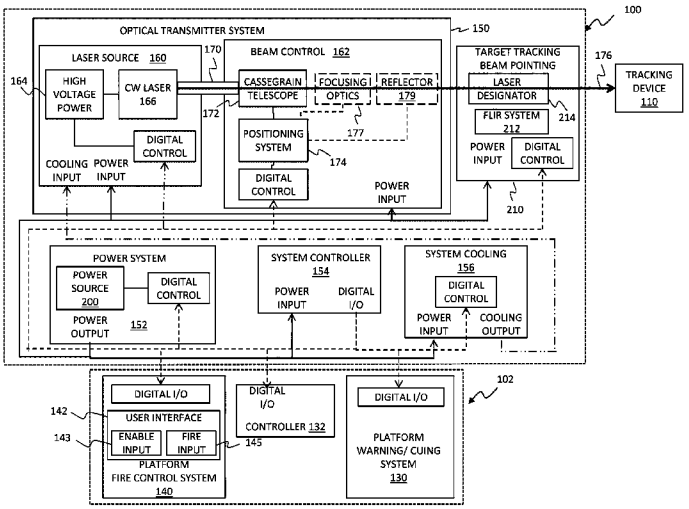

U.S. PATENT DOCUMENTS

6,359,710	B1	3/2002	Takken et al.	
6,429,446	B1 *	8/2002	Labaugh	250/504 R
6,439,888	B1	8/2002	Boutoussov et al.	
6,480,140	B1 *	11/2002	Rosefsky	342/14
6,587,486	B1	7/2003	Sepp et al.	
6,697,008	B1 *	2/2004	Sternowski	342/14
6,779,753	B2 *	8/2004	Baumann et al.	244/3.16
6,801,550	B1	10/2004	Snell	
6,873,893	B1 *	3/2005	Sanghera et al.	701/1
6,903,674	B2 *	6/2005	Hoesel et al.	342/13
6,929,214	B2 *	8/2005	Ackleson et al.	244/1 R
6,969,845	B2	11/2005	von Rosenberg, Jr.	
6,977,598	B2	12/2005	Longbottom	
7,017,467	B1	3/2006	Monroe	
7,053,812	B2	5/2006	Trainor	
7,196,301	B2 *	3/2007	Thomas et al.	250/206.1
7,378,626	B2 *	5/2008	Fetterly	244/3.1
7,504,982	B2 *	3/2009	Berg et al.	342/13
7,521,655	B2 *	4/2009	Kisletsov et al.	244/3.1
7,540,227	B2	6/2009	McCants, Jr.	
7,683,310	B1	3/2010	Sinclair et al.	
7,688,247	B2 *	3/2010	Anschel et al.	342/14
7,760,333	B2 *	7/2010	Akerlund	356/4.01
8,212,709	B2 *	7/2012	Bradley	342/14
2002/0190162	A1	12/2002	McDonnell	
2005/0065668	A1 *	3/2005	Sanghera et al.	701/3
2006/0000988	A1	1/2006	Stuart et al.	
2007/0075182	A1 *	4/2007	Fetterly	244/3.16
2007/0169616	A1	7/2007	Vickroy	
2007/0236382	A1 *	10/2007	Dove	342/14
2008/0018519	A1 *	1/2008	Berg et al.	342/14
2008/0018520	A1 *	1/2008	Moreau	342/14
2008/0074306	A1 *	3/2008	Akerlund	342/14
2008/0088496	A1 *	4/2008	Thum-Jaeger et al.	342/14
2008/0144673	A1	6/2008	Gapontsev	
2009/0084252	A1 *	4/2009	Marquis et al.	89/1.11
2009/0092157	A1	4/2009	Gapontsev	
2009/0122816	A1	5/2009	Wagner et al.	
2009/0189785	A1 *	7/2009	Kravitz et al.	342/14

FOREIGN PATENT DOCUMENTS

WO	WO9907439	2/1999
WO	WO2006031351	3/2006

OTHER PUBLICATIONS

Dornheim, M.A., "Cost of Protection," Aviation Week, 2008, 2 pgs., downloaded from website http://aviationweek.com/aw/generic/story_generic.jsp?channel=awst&id=news/11145p3.xml.

GLOBALSECURITY.ORG, "Large Aircraft Infrared Countermeasures (LAIRCM),"3 pgs., downloaded from http://ww.globalsecurity.org/military/systems/aircraft/systems/laircm.htm12/9/2008.

Matthews, W., "New Angle on Missile Defense; U.S. Overcomes Cost Obstacles With UAV-based Infrared Sensor," Defense News, Sep. 29, 2008, 3 pgs., downloaded Dec. 5, 2008 from http://www.defensenews.com/story.php?i=3746183.

Northrop Grumman Corporation, "AN/AAQ-24(V) Nemesis; In Production, Deployed and Tailored to Any Platform," 2 pgs.

Northrop Grumman Corporation, "AN/AAQ-28(V) Litening AT; Low Risk, Next Generation Targeting Pod," 2 pgs.

Northrop Grumman Corporation, "AN/AAR-54(V) Missile Warning System; Available Now for Transport, Fighter and Rotary Wing Aircraft," 2 pgs.

Osborn, K., "Army looks to field laser jammer by 2010," Army Times, May 12, 2007, 2 pgs., downloaded from http://www.armtimes.com/new/2007/05/defense_bae_jammer_070511a/12/5/2008.

Raytheon Company, "Scorpion Aircraft Protection System; Lightweight, Cost-Effective Missile Protection for Tactical Aircraft," 2006, 2 pgs.

Thermotek, Inc., "Solid State Recirculating Chiller T255P," 2 pgs.

Peavey et al., "Comparison of Cortical Bone Ablations by Using Infrared Laser Wavelengths 2.9 to 9.2 μm," Lasers in Surgery and Medicine, vol. 26, pp. 421-434, 1999.

* cited by examiner

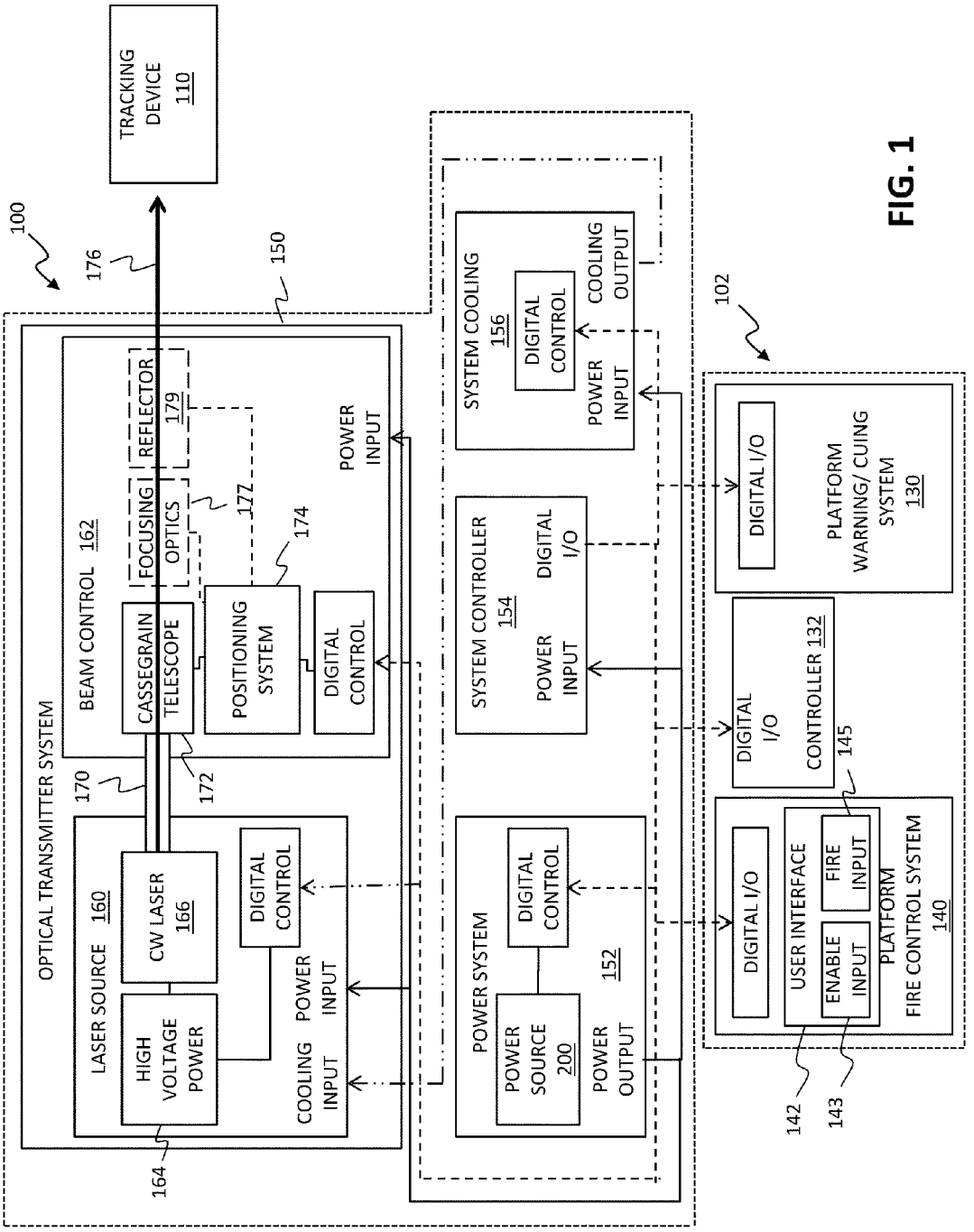
100
TRACKING DEVICE 110
176
150
OPTICAL TRANSMITTER SYSTEM
BEAM CONTROL 162
CASSEGRAIN TELESCOPE
FOCUSING OPTICS
REFLECTOR
179
177
POSITIONING SYSTEM
174
DIGITAL CONTROL
POWER INPUT
170
172
LASER SOURCE 160
CW LASER 166
HIGH VOLTAGE POWER
DIGITAL CONTROL
COOLING INPUT
POWER INPUT
164
SYSTEM COOLING 156
DIGITAL CONTROL
POWER INPUT
COOLING OUTPUT
SYSTEM CONTROLLER 154
POWER INPUT
DIGITAL I/O
POWER SYSTEM 152
DIGITAL CONTROL
POWER SOURCE 200
POWER OUTPUT
102
DIGITAL I/O
PLATFORM WARNING/ CUING SYSTEM 130
DIGITAL I/O
CONTROLLER 132
145
DIGITAL I/O
USER INTERFACE
ENABLE INPUT
FIRE INPUT
PLATFORM FIRE CONTROL SYSTEM 140
142
143

FIG. 1

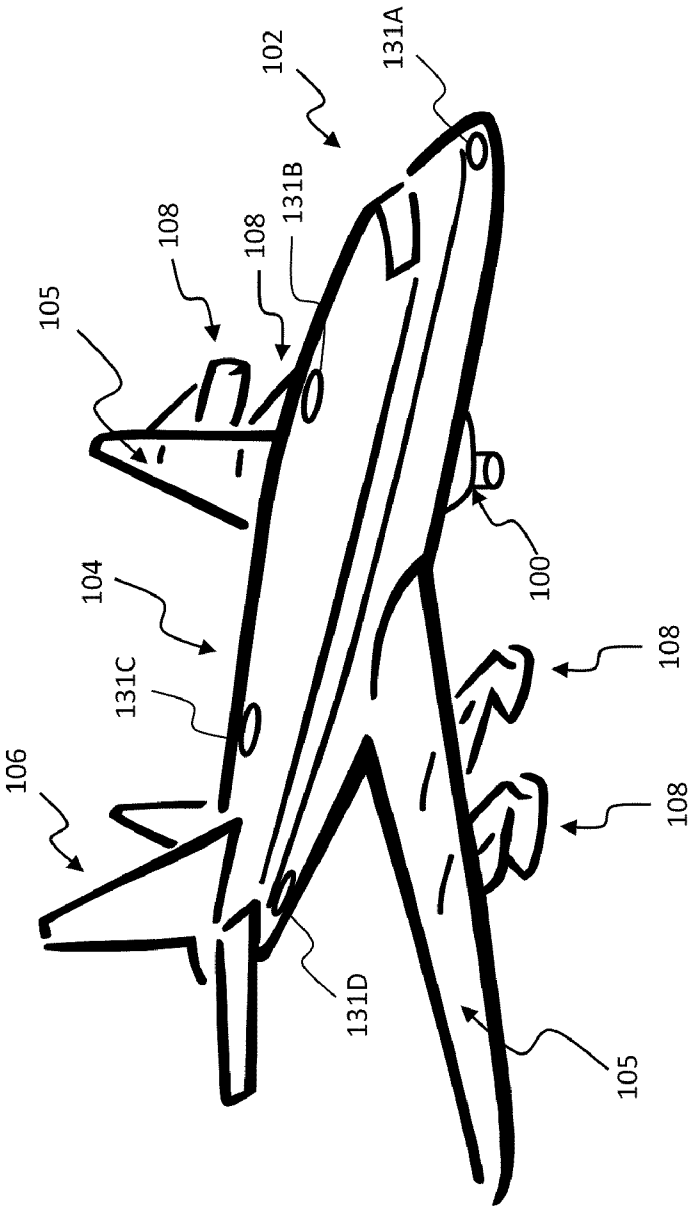

FIG. 2

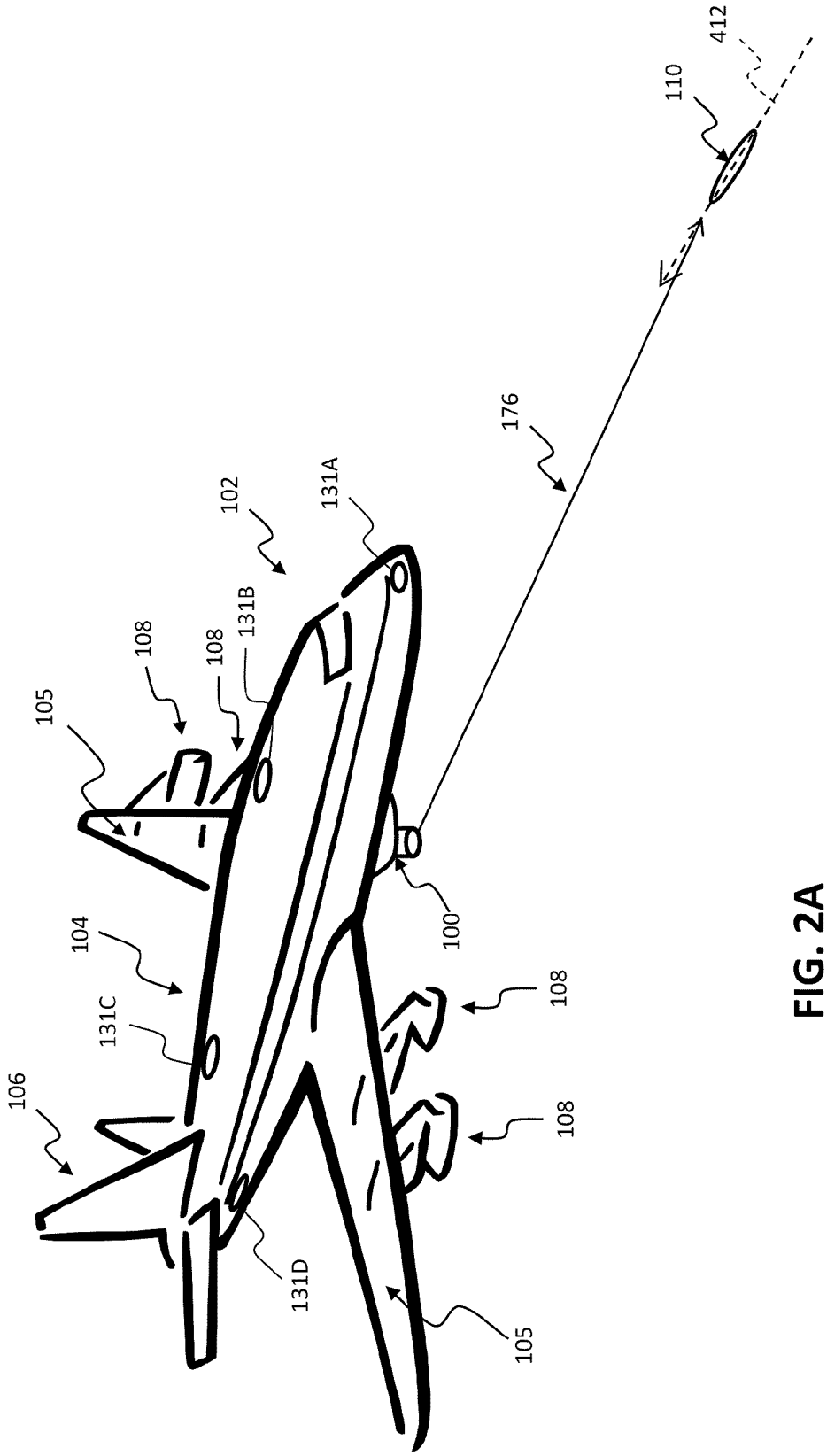
412
110
176
102
131A
131B
108
108
105
104
131C
106
100
108
108
131D
105

FIG. 2A

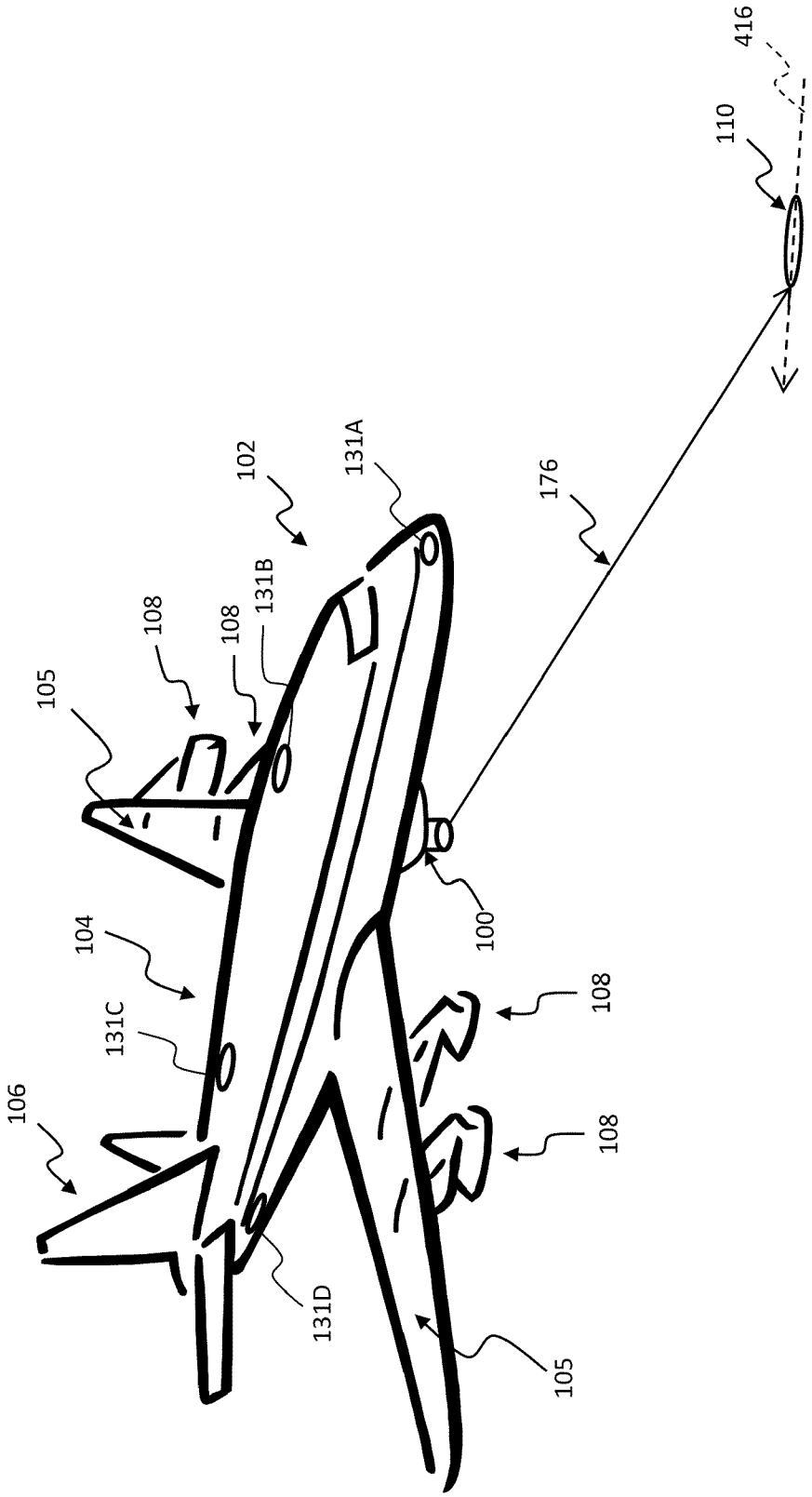
416
110
176
102
131A
131B
108
108
105
104
131C
106
100
108
108
131D
105

FIG. 2B

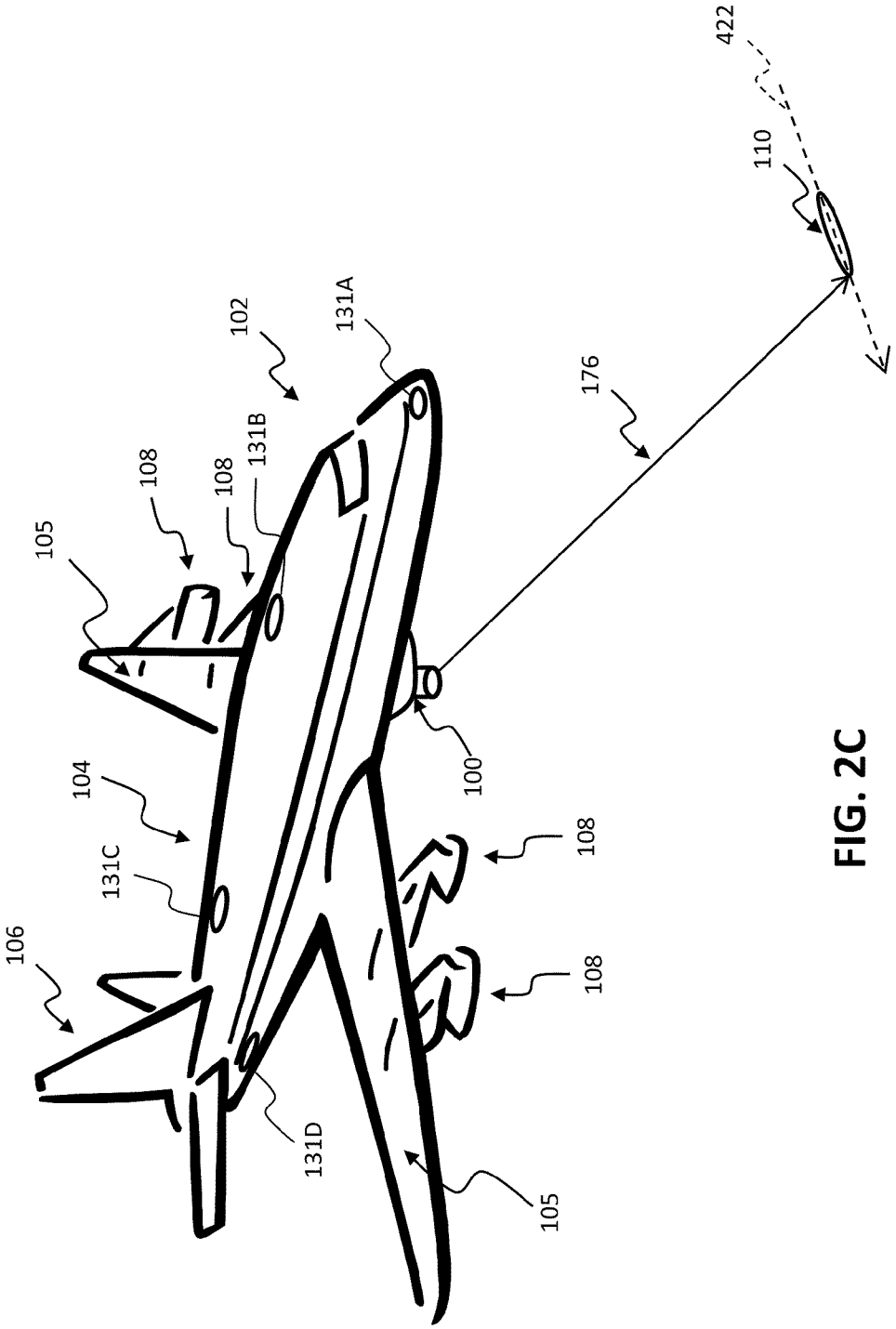
422
110
176
102
131A
131B
108
108
105
104
131C
106
100
108
108
131D
105

FIG. 2C

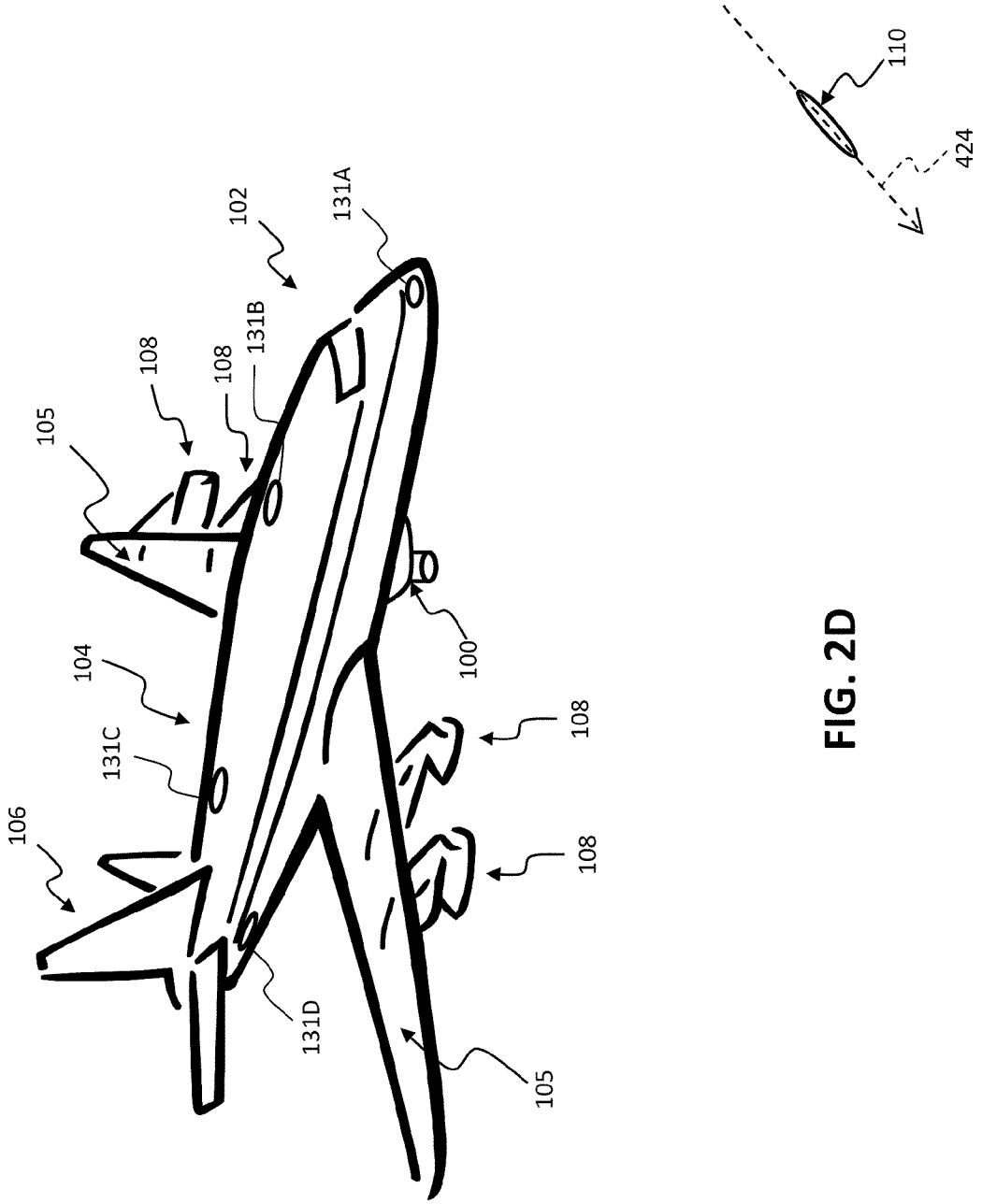
110
424
102
131A
131B
108
108
105
104
131C
106
100
108
108
131D
105

FIG. 2D

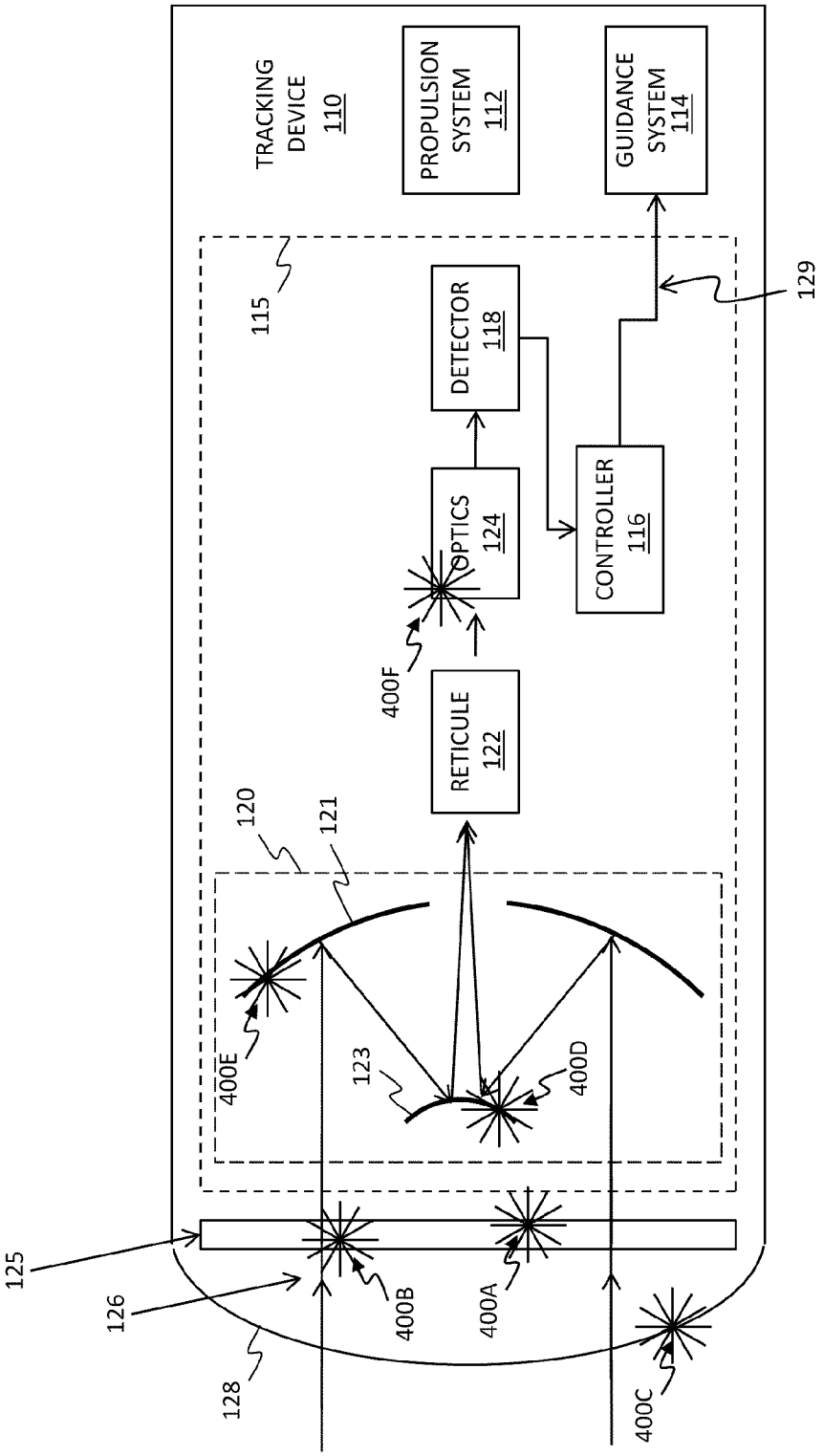
TRACKING DEVICE 110
PROPULSION SYSTEM 112
GUIDANCE SYSTEM 114
115
DETECTOR 118
129
OPTICS 124
CONTROLLER 116
400F
RETICULE 122
120
121
400E
123
400D
125
126
400B
400A
128
400C

FIG. 3

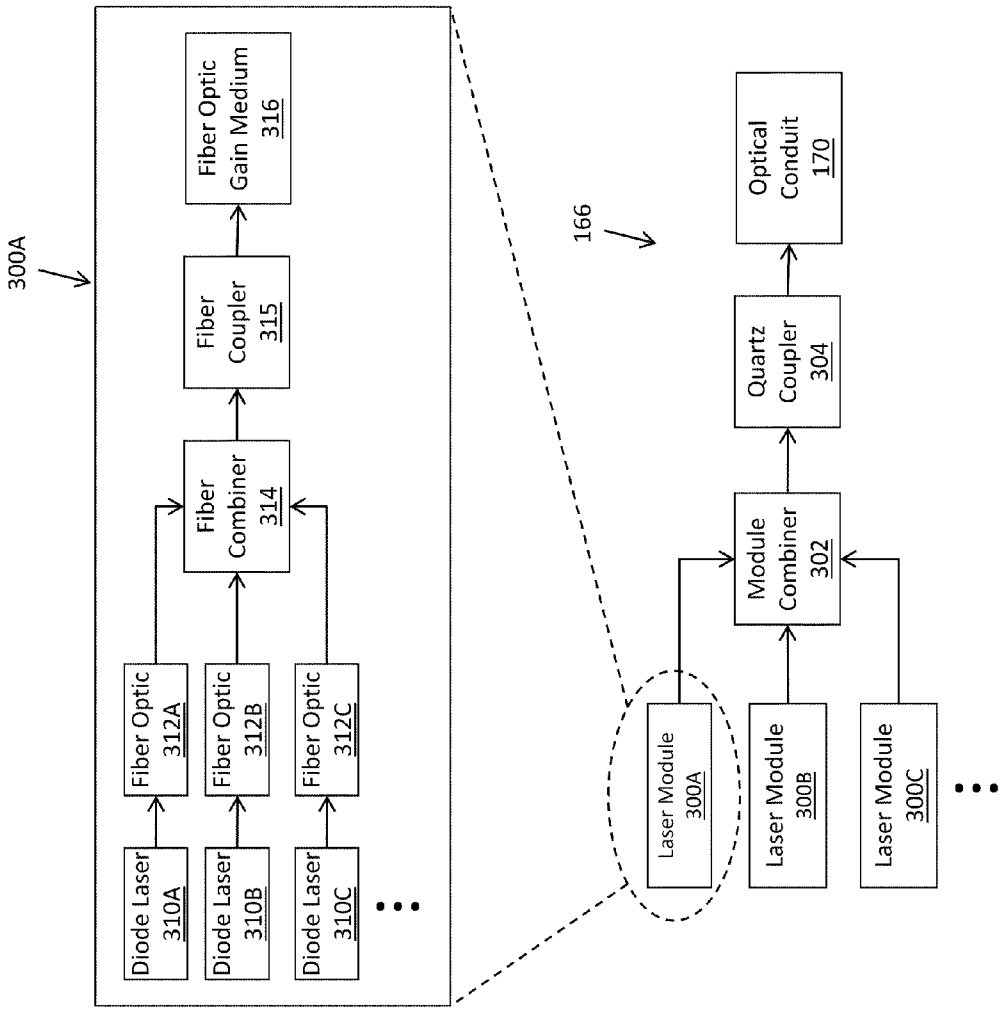
300A
Diode Laser 310A
Diode Laser 310B
Diode Laser 310C
Fiber Optic 312A
Fiber Optic 312B
Fiber Optic 312C
Fiber Combiner 314
Fiber Coupler 315
Fiber Optic Gain Medium 316
166
Laser Module 300A
Laser Module 300B
Laser Module 300C
Module Combiner 302
Quartz Coupler 304
Optical Conduit 170

FIG. 4

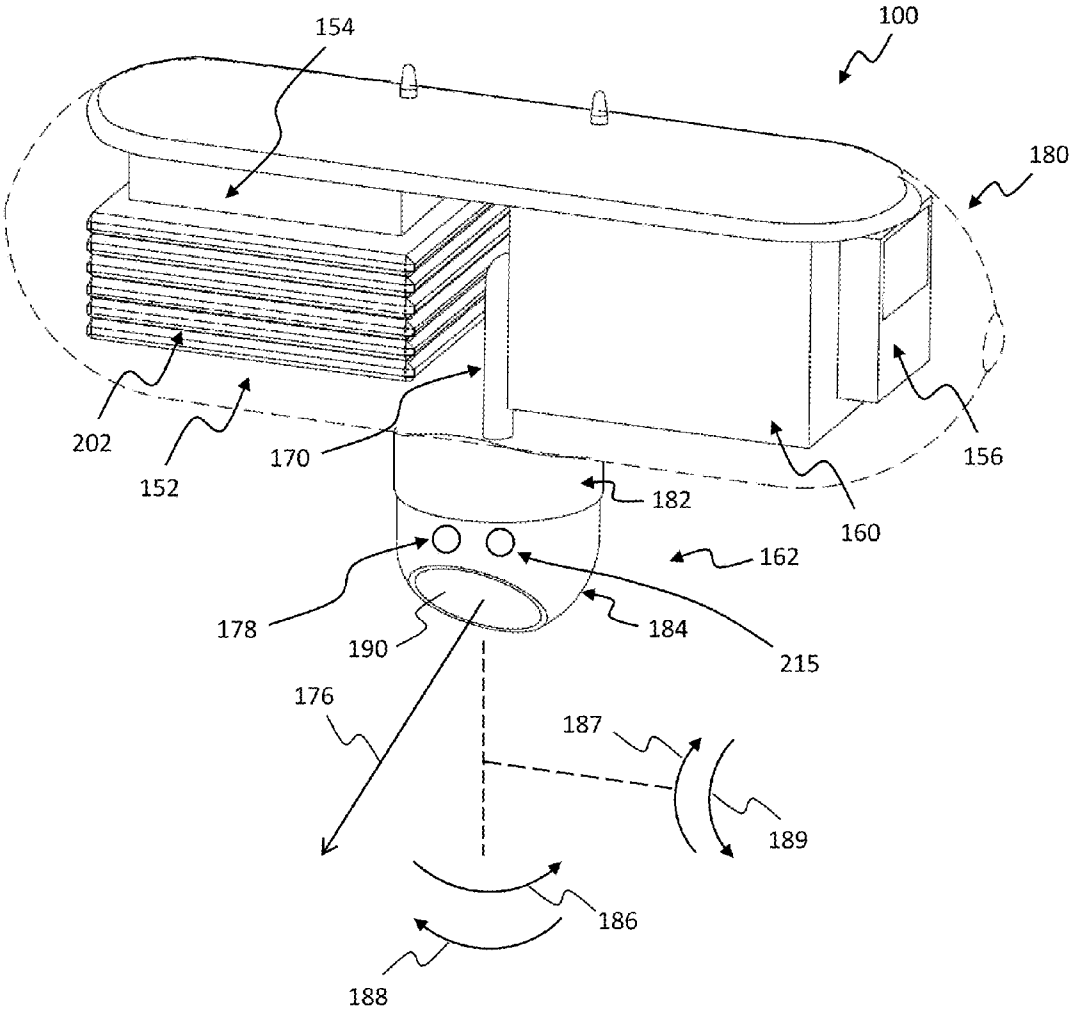
100
154
180
202
152
170
182
156
160
162
178
190
184
215
176
187
189
186
188

FIG. 5

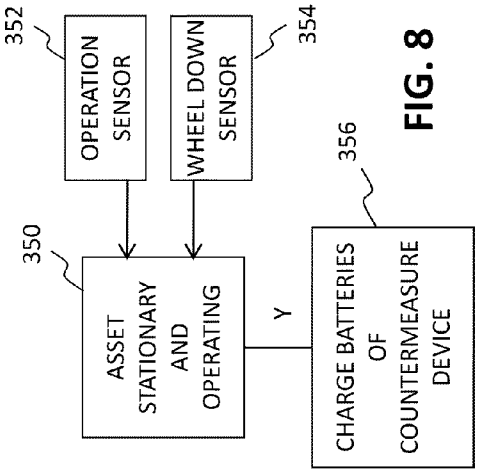
352
OPERATION SENSOR
354
WHEEL DOWN SENSOR
350
ASSET STATIONARY AND OPERATING
Y
356
CHARGE BATTERIES OF COUNTERMEASURE DEVICE

FIG. 8

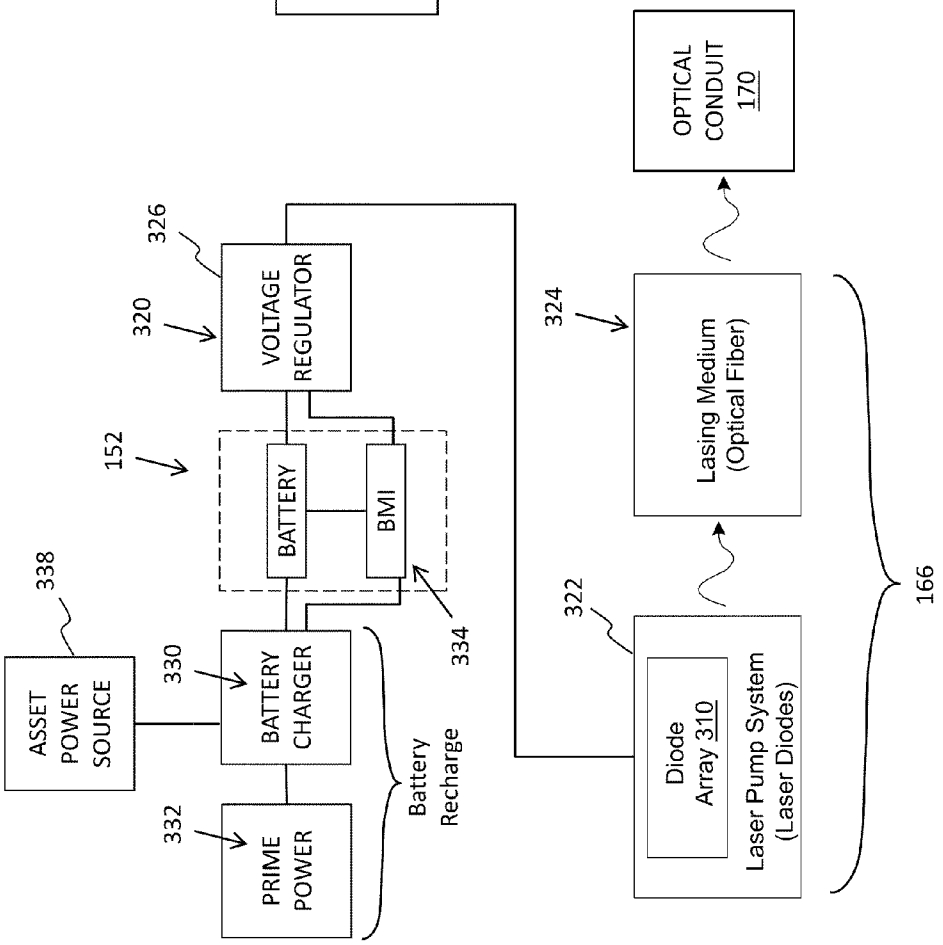
338
ASSET POWER SOURCE
330
BATTERY CHARGER
332
PRIME POWER
Battery Recharge
152
BATTERY
BMI
334
320
326
VOLTAGE REGULATOR
322
Diode Array 310
Laser Pump System (Laser Diodes)
324
Lasing Medium (Optical Fiber)
OPTICAL CONDUIT 170
166

FIG. 6

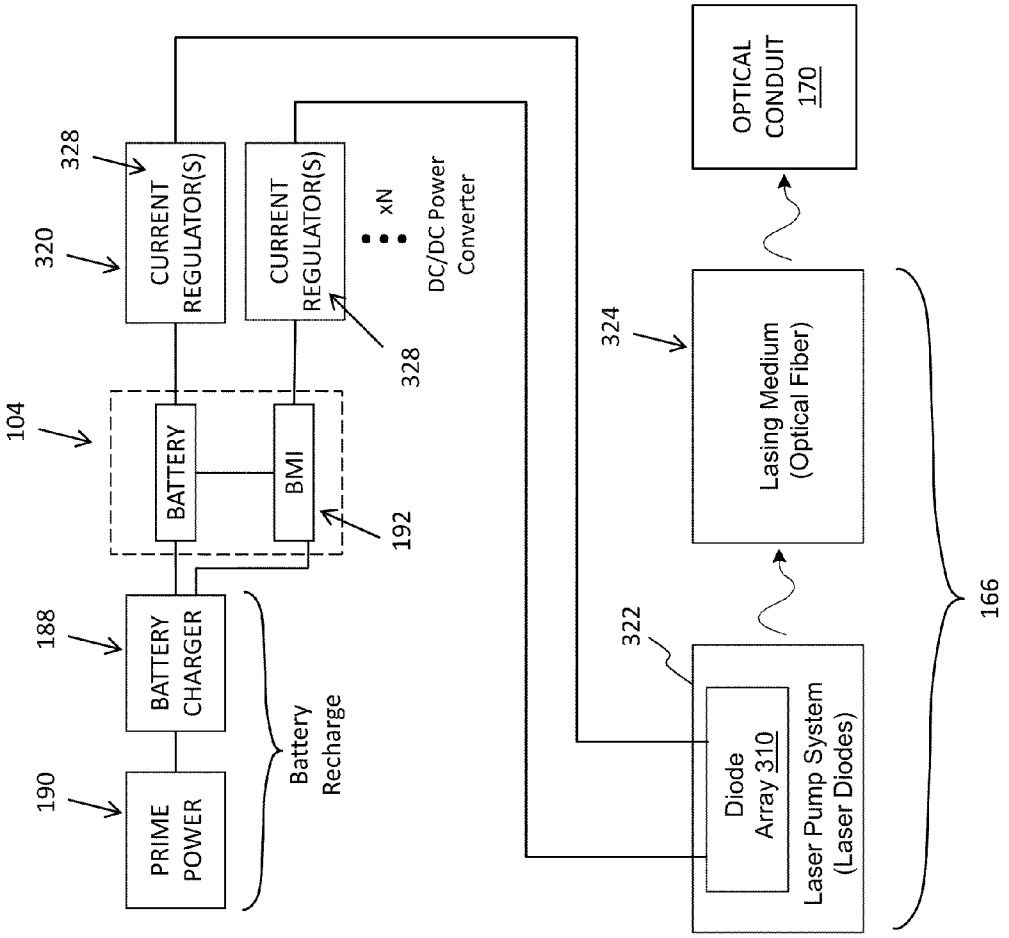
190
PRIME POWER
188
BATTERY CHARGER
Battery Recharge
104
BATTERY
BMI
192
320
CURRENT REGULATOR(S)
328
CURRENT REGULATOR(S)
xN
DC/DC Power Converter
328
324
Lasing Medium (Optical Fiber)
OPTICAL CONDUIT 170
322
Diode Array 310
Laser Pump System (Laser Diodes)
166

FIG. 7

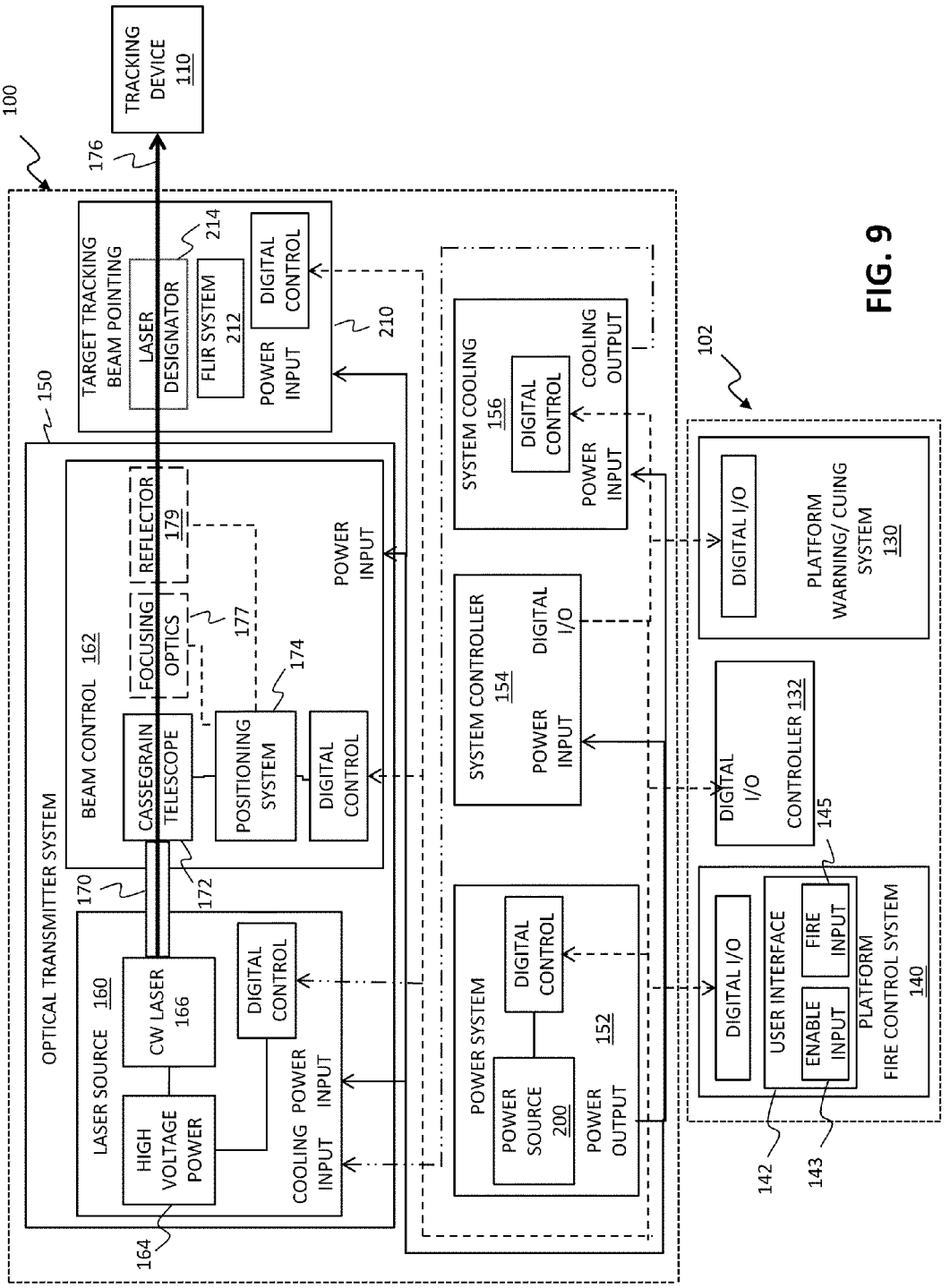
100
TRACKING DEVICE 110
176
TARGET TRACKING BEAM POINTING
LASER DESIGNATOR
214
FLIR SYSTEM 212
DIGITAL CONTROL
POWER INPUT
210
150
OPTICAL TRANSMITTER SYSTEM
BEAM CONTROL 162
FOCUSING
REFLECTOR
179
OPTICS
177
CASSEGRAIN TELESCOPE
POSITIONING SYSTEM
174
DIGITAL CONTROL
POWER INPUT
170
172
LASER SOURCE 160
CW LASER 166
HIGH VOLTAGE POWER
DIGITAL CONTROL
COOLING INPUT
POWER INPUT
164
SYSTEM COOLING 156
DIGITAL CONTROL
POWER INPUT
COOLING OUTPUT
SYSTEM CONTROLLER 154
POWER INPUT
DIGITAL I/O
POWER SYSTEM 152
DIGITAL CONTROL
POWER SOURCE 200
POWER OUTPUT
102
DIGITAL I/O
PLATFORM WARNING/ CUING SYSTEM 130
DIGITAL I/O
CONTROLLER 132
145
DIGITAL I/O
USER INTERFACE
ENABLE INPUT
FIRE INPUT
PLATFORM FIRE CONTROL SYSTEM 140
142
143

FIG. 9

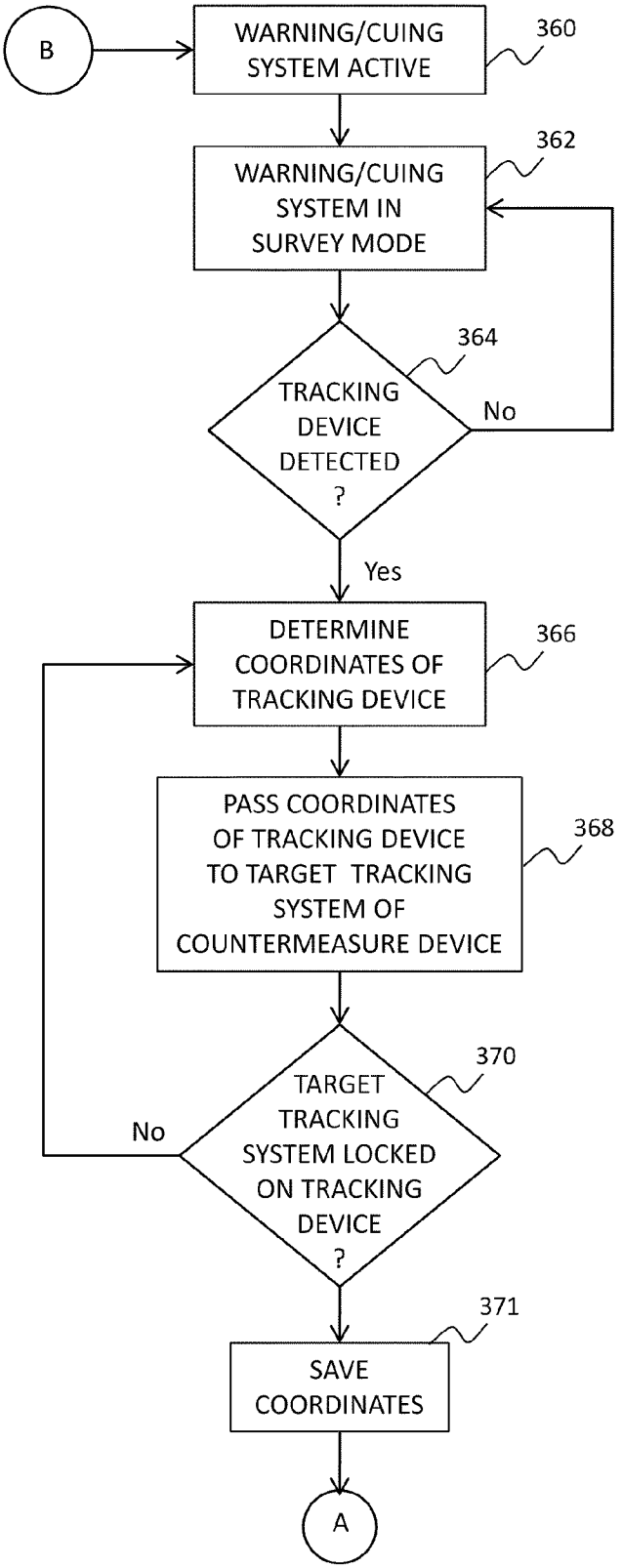
B
WARNING/CUING SYSTEM ACTIVE
360
WARNING/CUING SYSTEM IN SURVEY MODE
362
TRACKING DEVICE DETECTED ?
364
No
Yes
DETERMINE COORDINATES OF TRACKING DEVICE
366
PASS COORDINATES OF TRACKING DEVICE TO TARGET TRACKING SYSTEM OF COUNTERMEASURE DEVICE
368
TARGET TRACKING SYSTEM LOCKED ON TRACKING DEVICE ?
370
No
SAVE COORDINATES
371
A

FIG. 10A

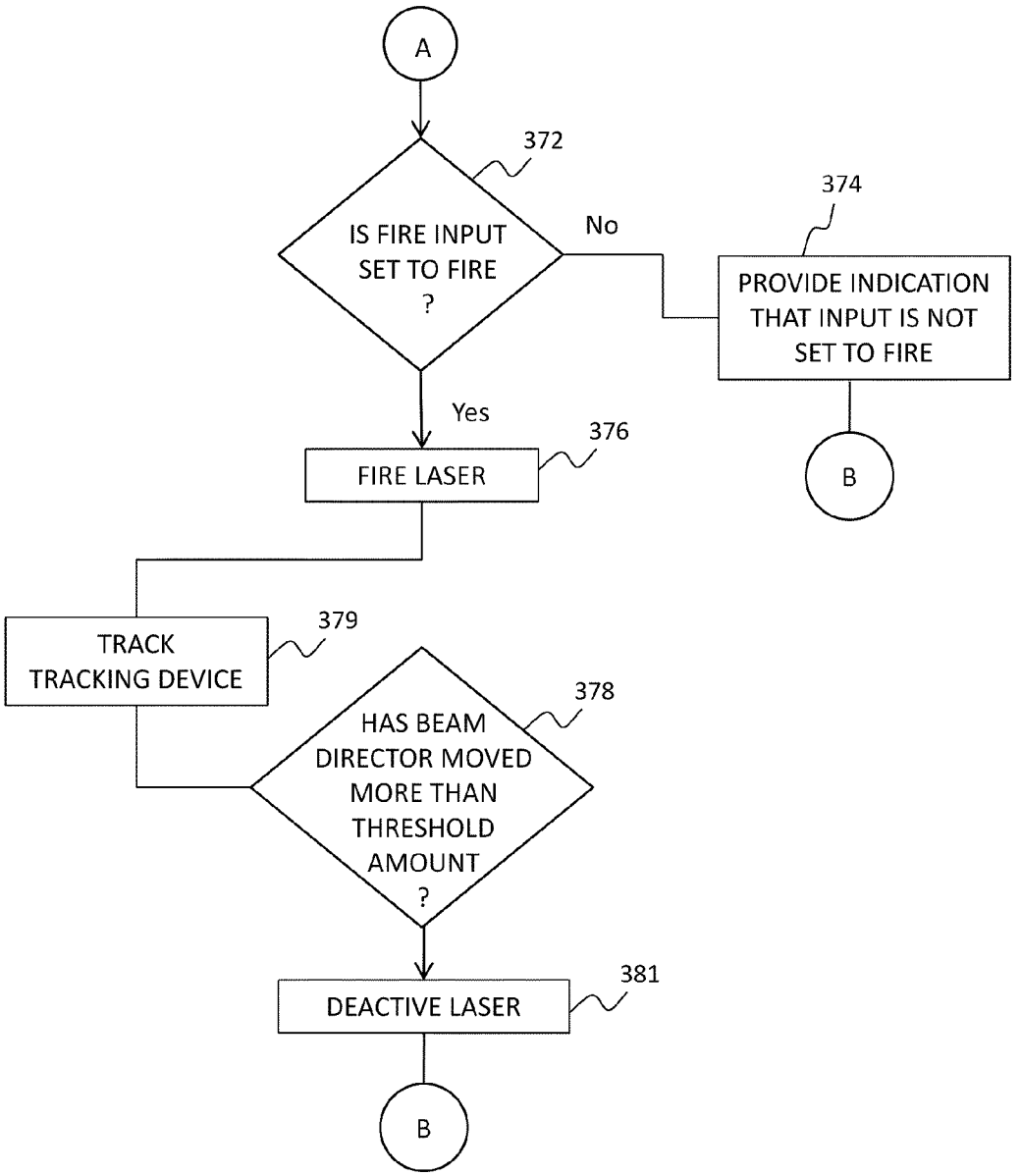
A
372
IS FIRE INPUT SET TO FIRE ?
No
374
PROVIDE INDICATION THAT INPUT IS NOT SET TO FIRE
B
Yes
376
FIRE LASER
379
TRACK TRACKING DEVICE
378
HAS BEAM DIRECTOR MOVED MORE THAN THRESHOLD AMOUNT ?
381
DEACTIVE LASER
B

FIG. 10B

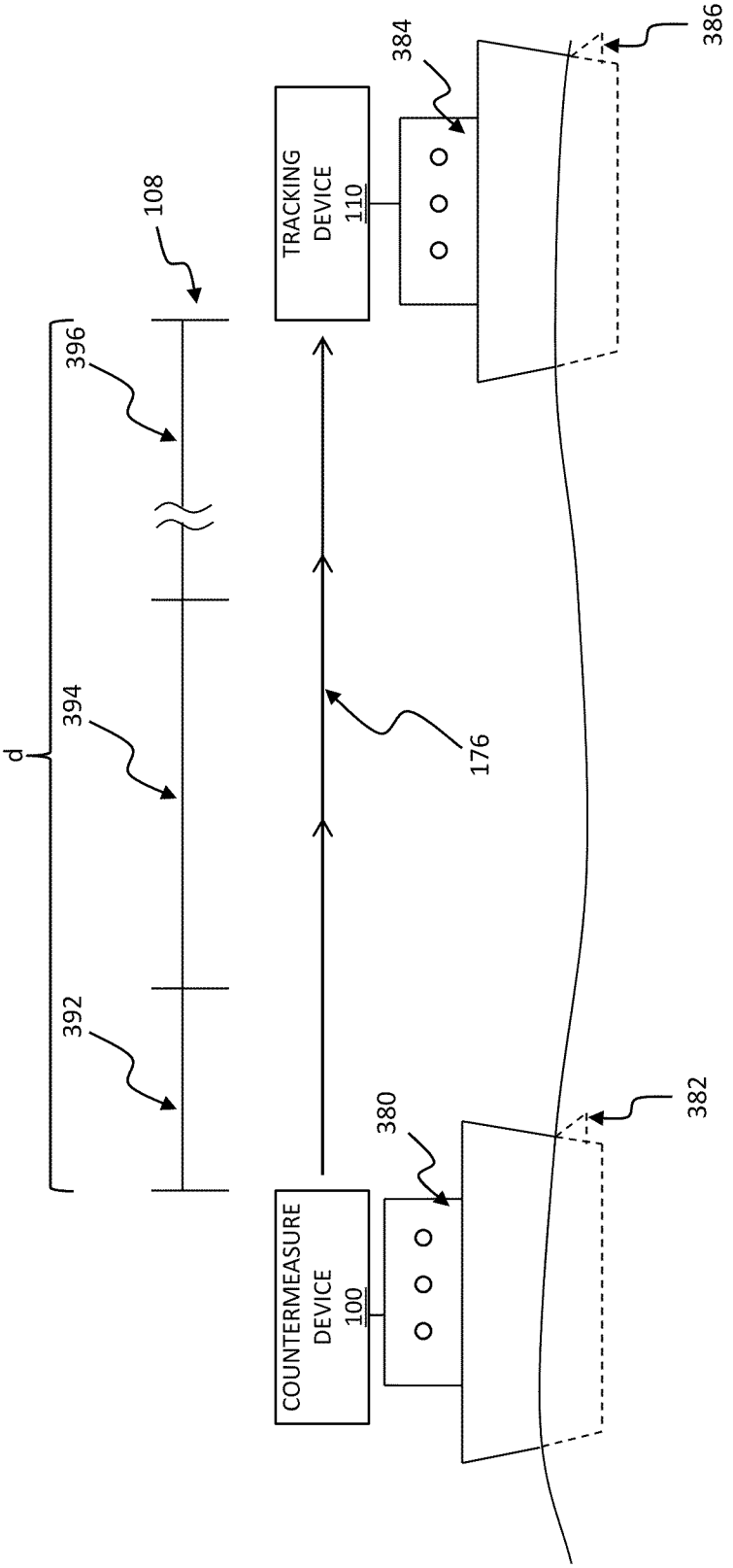
d
392
394
396
108
TRACKING DEVICE 110
384
386
176
COUNTERMEASURE DEVICE 100
380
382

FIG. 11

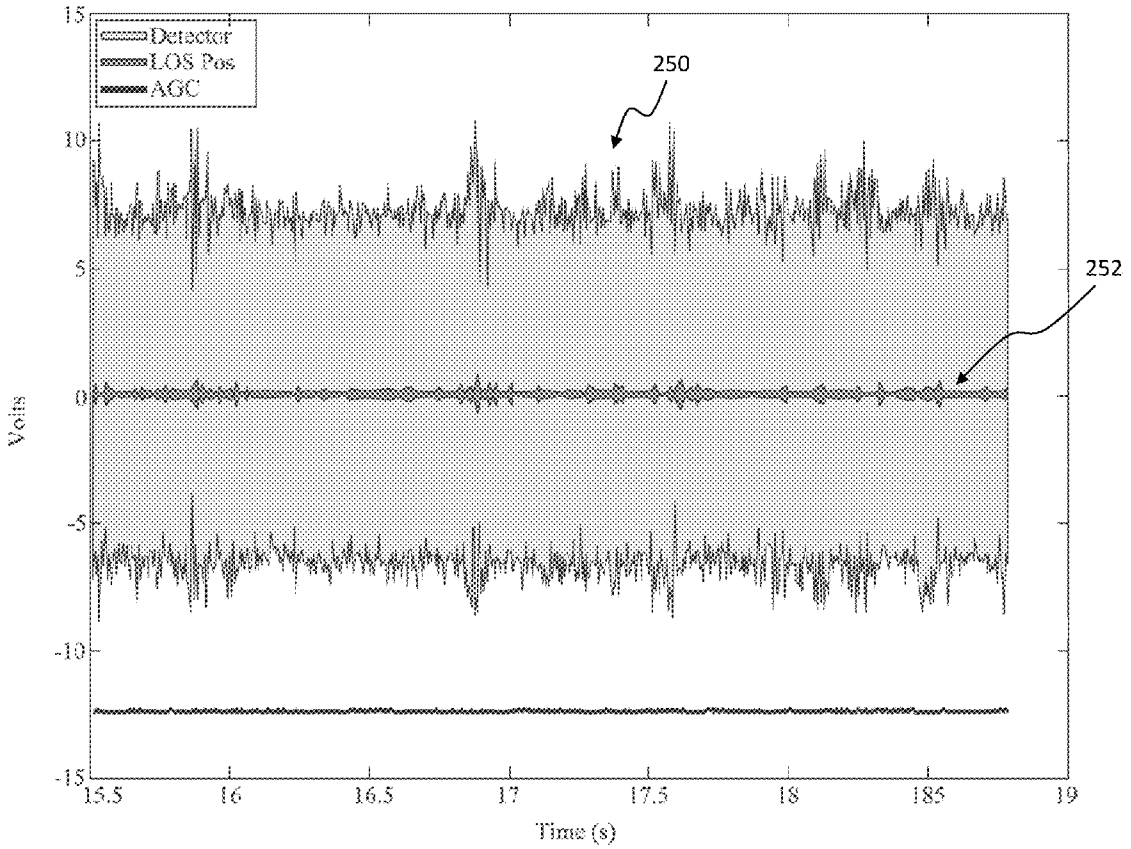
Detector
LOS Pos
AGC
250
252
15
10
5
0
-5
-10
-15
Volts
15.5
16
16.5
17
17.5
18
185
19
Time (s)

FIG. 12

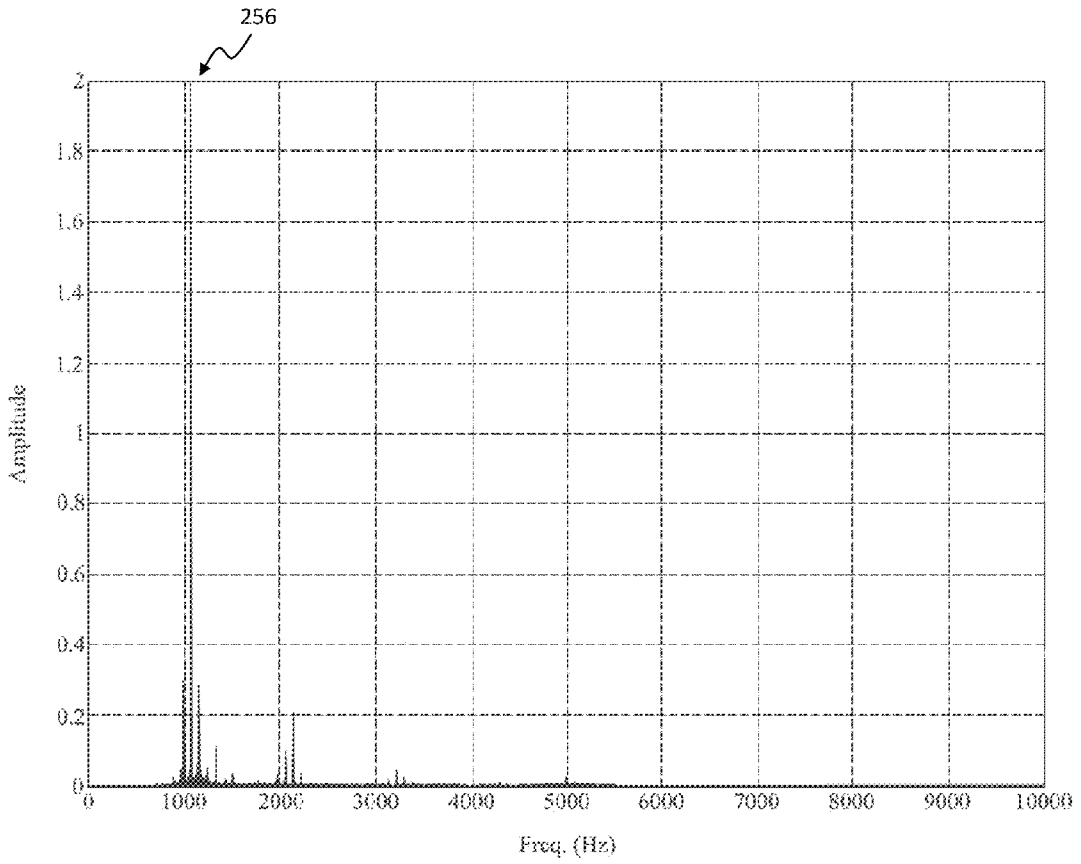
256
Amplitude
2
1.8
1.6
1.4
1.2
1
0.8
0.6
0.4
0.2
0
0
1000
2000
3000
4000
5000
6000
7000
8000
9000
10000
Freq. (Hz)

FIG. 13

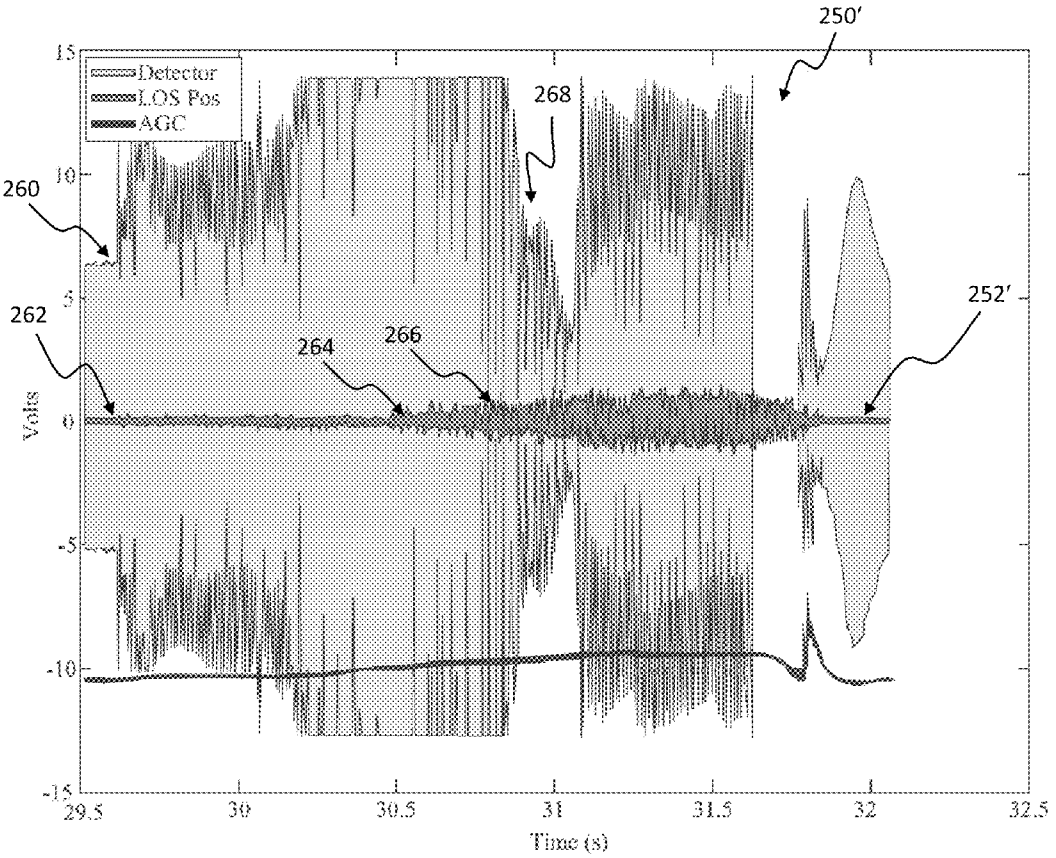
250′
268
260
262
264
266
252′
Detector
LOS Pos
AGC
Volts
Time (s)
15
10
5
0
-5
-10
-15
29.5
30
30.5
31
31.5
32
32.5

FIG. 14

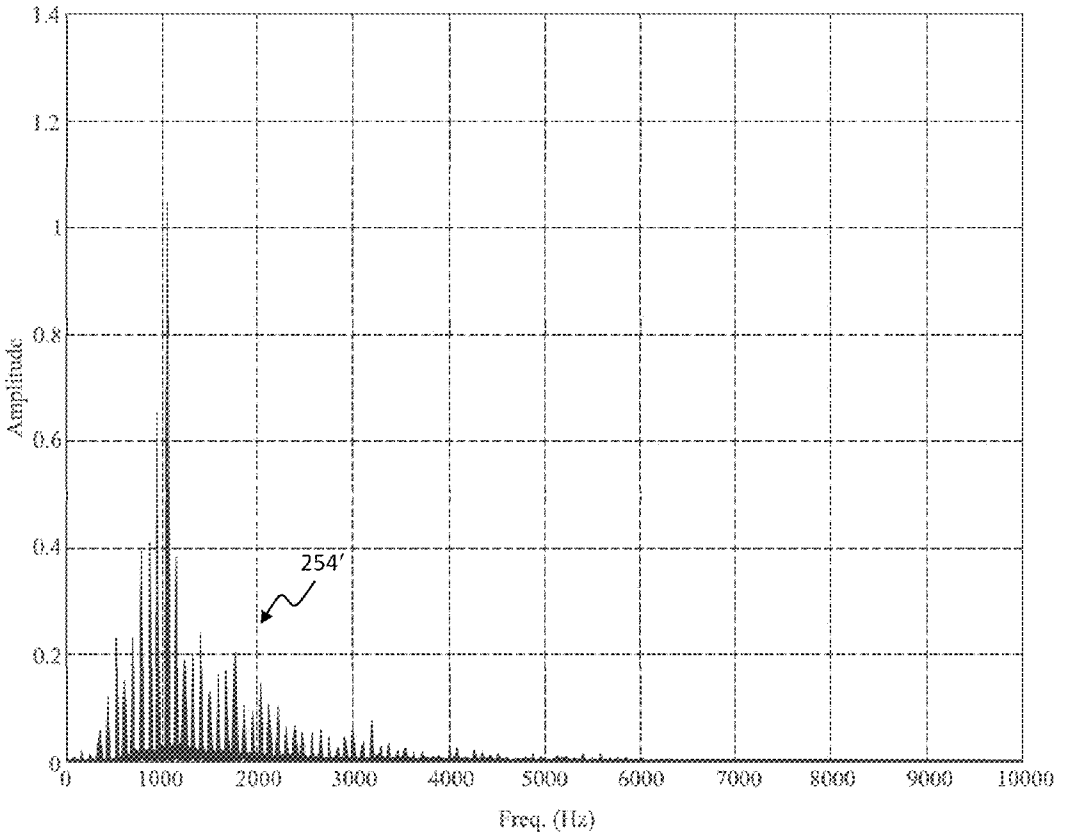
1.4
1.2
1
0.8
0.6
0.4
0.2
0
Amplitude
254′
0
1000
2000
3000
4000
5000
6000
7000
8000
9000
10000
Freq. (Hz)

FIG. 15

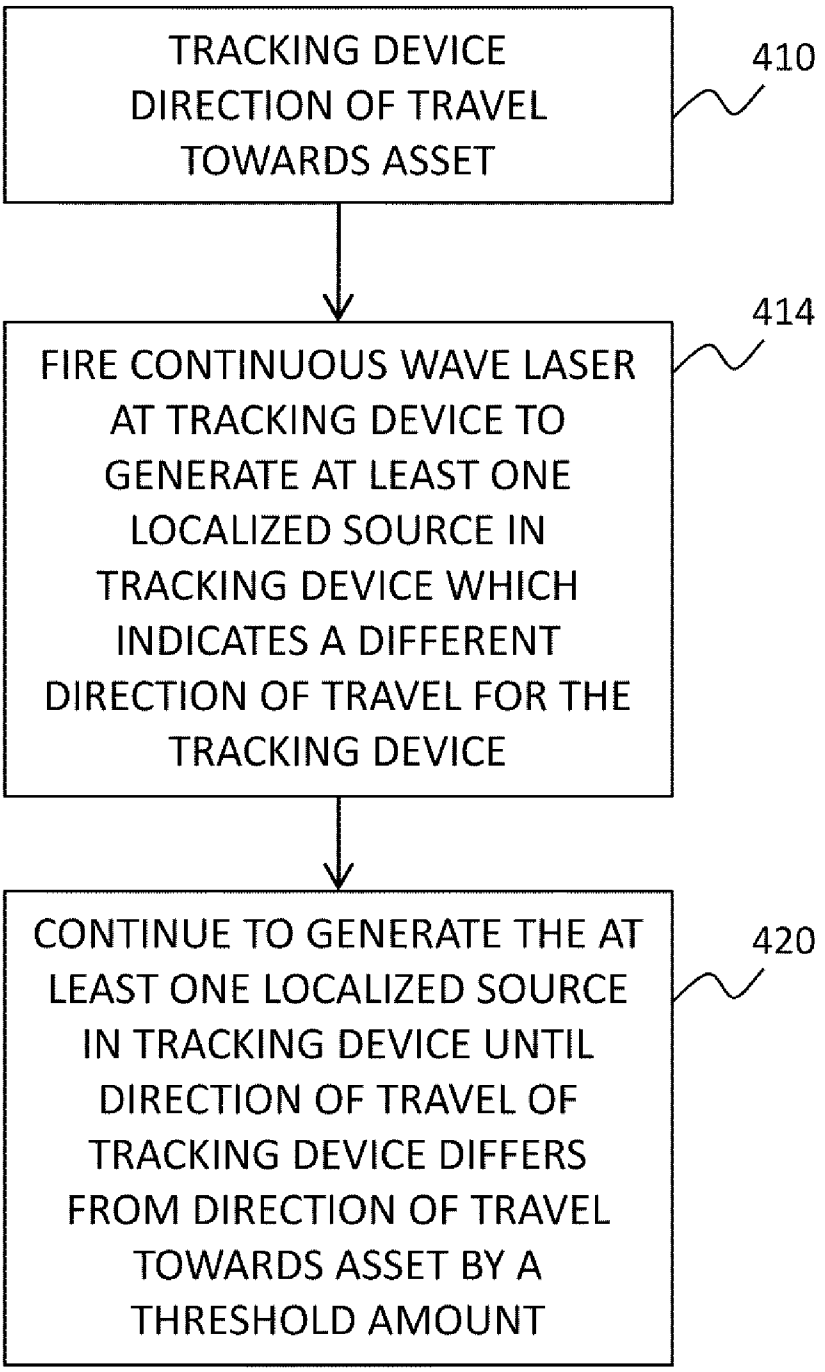
TRACKING DEVICE DIRECTION OF TRAVEL TOWARDS ASSET
410
FIRE CONTINUOUS WAVE LASER AT TRACKING DEVICE TO GENERATE AT LEAST ONE LOCALIZED SOURCE IN TRACKING DEVICE WHICH INDICATES A DIFFERENT DIRECTION OF TRAVEL FOR THE TRACKING DEVICE
414
CONTINUE TO GENERATE THE AT LEAST ONE LOCALIZED SOURCE IN TRACKING DEVICE UNTIL DIRECTION OF TRAVEL OF TRACKING DEVICE DIFFERS FROM DIRECTION OF TRAVEL TOWARDS ASSET BY A THRESHOLD AMOUNT
420

FIG. 16

COUNTERMEASURE DEVICE FOR A MOBILE TRACKING DEVICE

STATEMENT REGARDING FEDERALLY SPONSORED RESEARCH OR DEVELOPMENT

The invention described herein was made in the performance of official duties by employees of the Department of the Navy and may be manufactured, used and licensed by or for the United States Government for any governmental purpose without payment of any royalties thereon.

BACKGROUND OF THE INVENTION

The present invention relates generally to a countermeasure device which causes a mobile tracking device to not approach closer to an asset, and more particularly, to a countermeasure device which directs the mobile tracking device away from the asset or disables the tracking device.

Presently, a multitude of mobile tracking devices are known which identify an asset and attempt to move closer to the asset and potentially contact the asset. Examples of mobile tracking devices include infrared based mobile tracking devices which examine the infrared energy which is emitted by the asset and detected by the mobile tracking device. These infrared mobile tracking devices alter their direction of travel to track the highest infrared energy being detected within their field of view. Such mobile tracking devices may rely on a non-imaging detection system or an imaging detection system.

There are several countermeasures available to misdirect a mobile infrared tracking device away from an asset. One exemplary countermeasure device is infrared hot bodies which appear brighter to the mobile infrared tracking device than the asset. These infrared hot bodies may be expelled by the asset. The mobile tracking device detects the brighter infrared hot bodies and follows the hot bodies as they become further spaced apart from the asset; thereby directing the mobile infrared tracking device away from the asset. Exemplary infrared hot bodies include flares.

Another type of countermeasure device is a laser jamming device. Laser jamming devices are most effective against non-imaging mobile tracking devices. Laser jamming devices direct a pulsed or modulated laser signal at a detection system of the mobile tracking device. The pulsed or modulated laser signal is tailored to the specific characteristics of the mobile tracking device. An example of one laser jammer which is capable of jamming multiple types of tracking devices by varying a period of the modulated laser signal is disclosed in U.S. Pat. No. 6,359,710. Another exemplary laser jamming system is the AN/AAQ-24 Nemesis DIRCM system provided by Northrup Grumman Corporation located in Los Angeles, Calif.

SUMMARY OF THE INVENTION

In an exemplary embodiment of the present disclosure, a countermeasure device is disclosed. In another exemplary embodiment, a method of interacting with a mobile tracking device is disclosed.

In yet another exemplary embodiment of the present disclosure, an apparatus for interacting with a mobile tracking device is provided. The apparatus comprising: a plurality of sensor modules which monitor the environment; a first controller portion operatively connected to the plurality of sensor modules, the first controller portion determining a presence of the mobile tracking device in the environment based on information collected by the plurality of sensor modules and a current location of the mobile tracking device; and a countermeasure system. The countermeasure system including a second controller portion which receives the current location of the mobile tracking device from the first controller portion, orients a tracking system of the countermeasure system based on the current location of the mobile tracking device, detects the mobile tracking device, updates the location of the mobile tracking device, activates a continuous wave laser, and directs a continuous beam of optical energy at the mobile tracking device.

In a further exemplary embodiment, a method for keeping a mobile tracking device away from an asset is provided. The mobile tracking device having a seeker head which is directed at an asset due to the infrared energy radiated by the asset. The method comprising the steps of: directing an output of a continuous wave laser at the seeker head along a first direction of travel of the mobile tracking device, the output of the continuous wave laser being infrared energy; and propagating the infrared energy from the continuous wave laser into the seeker head of the mobile tracking device to generate at least one localized source within the mobile tracking device and within a field of view of the mobile tracking device which indicates a second direction of travel for the mobile tracking device.

BRIEF DESCRIPTION OF THE DRAWINGS

The foregoing aspects and many of the attendant advantages of this invention will become more readily appreciated as the same become better understood by reference to the following detailed description when taken in conjunction with the accompanying drawings.

FIG. **1** illustrates a representative view of a countermeasure device and associated asset;

FIG. **2** is a view of a representative asset;

FIG. **2**A illustrates the representative asset of FIG. **2** with a mobile tracking device approaching the representative asset along a first direction and optical energy from the countermeasure device being directed at the mobile tracking device;

FIG. **2**B illustrates the mobile tracking device changing its direction of travel to a second direction due to the optical energy directed from the countermeasure device at the mobile tracking device;

FIG. **2**C illustrates the mobile tracking device changing its direction of travel to a third direction due to the optical energy directed from the countermeasure device at the mobile tracking device;

FIG. **2**D illustrates the mobile tracking device changing its direction of travel to a fourth direction due to the optical energy directed from the countermeasure device at the mobile tracking device;

FIG. **3** illustrates an exemplary mobile tracking device;

FIG. **4** illustrates an exemplary laser source;

FIG. **5** illustrates a perspective view of a countermeasure device wherein portions of the housing are shown in phantom;

FIG. **6** illustrates a first arrangement of components of the portable cutting device;

FIG. **7** illustrates a second arrangement of components of the portable cutting device;

FIG. **8** illustrates a processing sequence for charging the battery source of the countermeasure device;

FIG. **9** illustrates a representative view of a countermeasure device and associated asset;

FIGS. **10**A and **10**B illustrate a processing sequence for engaging a mobile tracking device;

FIG. **11** illustrates a representative asset being tracked by a representative mobile tracking device;

FIGS. **12** and **13** represent the response characteristics of a mobile tracking device following an asset; and

FIGS. **14** and **15** represent the response characteristics of a mobile tracking device following an asset and being subsequently illuminated by a countermeasure device; and

FIG. **16** illustrates a method of countering a mobile tracking device with a countermeasure device.

Corresponding reference characters indicate corresponding parts throughout the several views. Although the drawings represent embodiments of various features and components according to the present disclosure, the drawings are not necessarily to scale and certain features may be exaggerated in order to better illustrate and explain the present disclosure. The exemplification set out herein illustrates embodiments of the invention, and such exemplifications are not to be construed as limiting the scope of the invention in any manner.

DETAILED DESCRIPTION OF THE DRAWINGS

For the purposes of promoting an understanding of the principles of the invention, reference will now be made to the embodiments illustrated in the drawings, which are described below. The embodiments disclosed below are not intended to be exhaustive or limit the invention to the precise form disclosed in the following detailed description. Rather, the embodiments are chosen and described so that others skilled in the art may utilize their teachings. It will be understood that no limitation of the scope of the invention is thereby intended. The invention includes any alterations and further modifications in the illustrated devices and described methods and further applications of the principles of the invention which would normally occur to one skilled in the art to which the invention relates.

The present disclosure is directed to countermeasure devices which are implemented to protect aircraft, such as commercial airlines and military aircraft. However, the principles discussed herein are applicable to other types of assets. Exemplary assets include moveable assets, such as aircraft, ships, buses, or trucks, or land based assets, such as an airport, factory, building, or facility.

Referring to FIG. **1**, a countermeasure device **100** is shown. Countermeasure device **100** is coupled to an asset **102**. For purposes of discussion, asset **102** is considered to be an airplane, such as the airplane designated **102** in FIG. **2**. However, the present disclosure is contemplated for use with a multitude of different assets. Airplane **102** includes a body or fuselage **104**, a pair of main wings **105**, tail wings **106**, and a plurality of propulsion devices **108**. Exemplary propulsion devices include jet engines, internal combustion engines with associated propellers, and any other suitable engine arrangement.

Referring to FIG. **3**, components of a mobile tracking device **110** are shown. Mobile tracking device **110** includes a propulsion system **112** which provides power to propel mobile tracking device **110**. Exemplary propulsion systems include solid fuel rockets, engines, and any other suitable devices for providing power to mobile tracking device **110**. Mobile tracking device **110** also includes a guidance system **114** which controls the direction of travel of mobile tracking device **110**. Exemplary guidance system components include wings for an airborne mobile tracking device **110**, a rudder for a marine mobile tracking device **110**, and ground engaging members for a land based mobile tracking device **110**. The guidance system **114** steers mobile tracking device **110** to change a direction of travel of mobile tracking device **110**. Exemplary airborne tracking devices include rockets, airplanes, and other flying devices. Exemplary marine tracking devices include boats (see FIG. **11**), submersible devices, and other marine devices. Exemplary land based tracking devices include wheeled devices, tracked devices, and other suitable land based devices.

Mobile tracking device **110** includes a controller **116** which controls the operation of propulsion system **112** and guidance system **114**. Mobile tracking device **110** also includes a gimbaled seeker head **115** which is able to move independent of the remainder of mobile tracking device **110**. Seeker head **115** supports controller **116**, a detector **118**, telescope **120**, a reticule **122**, and optics **124**.

In operation, electromagnetic radiation **126** from the environment enters an optical window **128** of mobile tracking device **110**. Optical window **128** may be a dome. Optical window **128** may be selected to only pass electromagnetic radiation **126** within a certain wavelength band. For instance, in the case of an infrared mobile tracking device **110**, optical window **128** may only pass electromagnetic radiation **126** within the infrared spectrum or a portion of the infrared spectrum. In other embodiments, a separate filter **125** is included somewhere within the optical setup of mobile tracking device **110** to limit the range of wavelengths of electromagnetic radiation **126** passed on to detector **118**. Filter **125** is shown between optical window **128** and telescope **120**. However, filter **125** may be positioned anywhere between optical window **128** and detector **118**.

The electromagnetic radiation **126** is received by telescope **120**. Telescope **120** includes a primary mirror **121** which focuses the electromagnetic radiation **126** towards a secondary mirror **123**. Secondary mirror **123** in turn focuses the electromagnetic radiation **126** towards reticule **122**. Reticule **122** spins to provide a modulated signal of the electromagnetic radiation. Optics **124** receives and focus the modulated signal of the electromagnetic radiation **126** passing through reticule **122** onto detector **118** which is a non-imaging detector.

Controller **116** receives input from detector **118** which is used by controller **116** to determine the location the brightest object in the environment, typically asset **102**. The modulated signal allows controller **116** to discriminate between background electromagnetic radiation and the radiation of asset **102**, as well as, determine the location of asset **102** relative to a direction of travel of mobile tracking device **110**. Based on this input from detector **118**, controller **116** determines a desired direction of travel for mobile tracking device **110** which corresponds to tracking device **110** heading towards asset **102**. Seeker head **115** is adjusted to center the brightest object in the environment so that seeker head **115** is pointed directly at the brightest object. Controller **116** provides this adjustment of seeker head **115** (from its intended orientation in line with the direction of travel of mobile tracking device **110**) to guidance system **114** as error signal **129**. Guidance system **114** uses this error signal **129** to alter the direction of travel of mobile tracking device **110**. Over time, if mobile tracking device **110** is tracking asset **102** mobile tracking device **110** will be pointed at asset **102** and seeker head **115** generally produces a small error signal which is indicative of mobile tracking device **110** being aligned to intercept asset **102**.

In the embodiment illustrated in FIG. **3**, mobile tracking device **110** includes a spinning reticule **122**. In another embodiment, mobile tracking device **110** does not include reticule **122** but rather secondary mirror **123** is tilted and telescope **120** is spun to produce a signal for controller **116**. In one embodiment, detector **118** is an imaging detector and

controller **116** processes the images from detector **118** to determine the location of asset **102**.

Returning to FIG. **2**, airplane **102** includes warning/cuing system **130** which detects when a mobile tracking device **110** has been launched and/or is tracking airplane **102**. Warning/cuing system **130** includes sensor modules **131** which monitor the environment around airplane **102**. Illustratively, four sensor modules **131**A-D are shown. Depending on the asset **102** being protected, fewer or additional sensor modules **131** may be used. In one embodiment, sensor modules **131** include focal plane array sensors with wide field of views that continuously survey the environment for mobile tracking devices **110**. In one embodiment, warning/cuing system **130** looks for a characteristic signal that indicates the launch of an airborne mobile tracking device **110**. In the case of airborne mobile tracking device **110**, the mobile tracking device **110** has a characteristic infrared and ultraviolet signature which warning/cuing system **130** recognizes as an airborne mobile tracking device **110**.

Exemplary warning/cuing systems include Model No. AAR-54 EWS available from Northrup Grumman Corporation located in Los Angeles, Calif. As explained herein, warning/cuing system **130** communicates with countermeasure device **100**. Countermeasure device **100**, in turn, provides optical energy from a continuous wave laser to redirect mobile tracking device **110** from tracking the path of asset **102** or to disable mobile tracking device **110**. In one embodiment, warning/cuing system **130** is provided as part of countermeasure device **100** instead of as a separate component of airplane **102**.

Airplane **102** further includes a fire control system **140**. Fire control system **140** interprets information provided by warning/cuing system **130** and provides a user interface **142** through which the operator of asset **102** activates countermeasure device **100**. In one embodiment, user interface **142** includes a user input **143** to enable countermeasure device **100** and a user input **145** to permit countermeasure device **100** to fire. In one embodiment, countermeasure device **100** is automatically activated when asset **102** is moving. Exemplary inputs include switches, buttons, and other suitable types of user inputs.

Returning to FIG. **1**, countermeasure device **100** is represented. Countermeasure device **100** includes an optical transmitter system **150**, a power system **152**, a system controller **154**, and a cooling system **156**. Each of optical transmitter system **150**, power system **152**, and cooling system **156** are coupled to system controller **154**. System controller **154** receives input from and provides instructions to each of optical transmitter system **150**, power system **152**, and cooling system **156** to control the operation of countermeasure device **100**. As explained herein, in one embodiment, countermeasure device **100** is housed in a self-contained pod which may be coupled to asset **102**.

Optical transmitter system **150** includes a laser source module **160** and a beam control module **162**. Laser source module **160** includes a high voltage power supply **164** which receives power from power system **152**. High voltage power supply **164** drives a continuous wave laser **166**. In one embodiment, continuous wave laser **166** is a continuous wave fiber laser. In one embodiment, continuous wave laser **166** is a continuous wave Ytterbium single mode fiber laser. Details regarding an exemplary continuous wave laser **166** are provided in U.S. patent application Ser. No. 11/973,437, filed Oct. 9, 2007 and issued as U.S. Pat. No. 7,593,435 on Sep. 22, 2009, titled POWERFUL FIBER LASER SYSTEM, assigned to IPG Photonics Corporation, the disclosure of which is expressly incorporated by reference herein. Details regarding an exemplary continuous wave laser **166** are provided in U.S. patent application Ser. No. 11/611,247, filed Dec. 15, 2006 subsequently abandoned, titled FIBER LASER WITH LARGE MODE AREA FIBER, assigned to IPG Photonics Corporation, the disclosure of which is expressly incorporated by reference herein. In one embodiment, continuous wave laser **166** is a solid state laser. Other exemplary continuous wave lasers include a 2.0 micrometer (μm) Thulium Fiber Laser (1.96-2.2 (μm) Thulium laser) having an output power of about at least 1 kW and a 1.0 μm, 800 Watt Direct Diode. An exemplary Thulium fiber laser is disclosed in U.S. Pat. No. 6,801,550, the disclosure of which is expressly incorporated by reference herein.

Referring to FIG. **4**, an exemplary configuration of continuous wave laser **166** is shown. Continuous wave laser **166** includes a plurality of individual modules **300** each of which provide a single mode 1.07 μm output beam. The output of each of modules **300** is combined together through a module combiner **302** which brings the energy together in a single beam. This combined beam is coupled to an optical conduit **170** through a quartz coupler **304**. Although three laser modules **300** are illustrated, any number of laser modules **300** may be included.

The components of a given laser module **300** are also shown in FIG. **4**. The laser module **300** includes a plurality of diode lasers **310** each of which are coupled into a respective Ytterbium fiber **312**. The output of the Ytterbium fibers **312** are combined through a fiber combiner **314** which brings the energy together. This energy is fed through a coupler **315** into an Ytterbium fiber optic gain medium **316** which produces therefrom a single mode 1.07 μm output beam. Although three diode laser sets **310** are illustrated any number of diode laser sets **310** may be included.

In one embodiment, the power of continuous wave laser **166** is about 3 kilowatts (kW). In one embodiment, the power level of continuous wave laser **166** is about 5 kW. In one embodiment, the power level of continuous wave laser **166** is about 10 kW. In one embodiment, the power level of continuous wave laser **166** is about 20 kW. In one embodiment, the power level of continuous wave laser **166** is about 50 kW. In one embodiment, the power level of continuous wave laser **166** is between about 3 kW and 20 kW. In one embodiment, the power level of continuous wave laser **166** is at least 3 kW.

Returning to FIG. **1**, the optical energy produced by continuous wave laser **166** is communicated to beam control module **162** through optical conduit **170**. An exemplary optical conduit **170** is a fiber optic cable.

Beam control module **162** includes a beam expander **172** and a positioning system **174**. Beam expander **172** receives the optical energy from optical conduit **170** and provides a generally collimated beam **176** of optical energy which exits countermeasure device **100**. An exemplary beam expander is a Cassegrain telescope. Optical energy from optical conduit **170** is provided at a focus of the Cassegrain telescope which then generally collimates this optical energy to produce the expanded beam of optical energy **176**. In one embodiment, a path length of beam expander **172** may be automatically adjusted by system controller **154** to change output beam **176** from a generally collimated beam of optical energy to a focused beam of optical energy. In this case, beam expander **172** may serve both as a beam expander (collimator) and focusing optics. In one embodiment, beam control module **162** also includes separate focusing optics **177** which focus the output beam **176** at a given distance from countermeasure device **100**.

Positioning system **174** alters the direction in which collimated beam **176** is directed. Referring to FIG. **5**, an exem-

plary configuration of countermeasure device **100** is shown. Countermeasure device **100** includes a housing **180** which houses system controller **154**, power system **152**, cooling system **156** and laser source module **160** of optical transmitter system **150**. Provided on a lower side of housing **180** is positioning system **174**. Positioning systems **174** includes a housing **182** coupled to housing **180** and a rotatable head **184** which is rotatable in directions **186** and **188**. In one embodiment, the rotatable head **184** has a pointing accuracy of up to 25 micro-radians. Rotatable head **184** includes an optical window **190** through which output beam **176** is directed. Output beam **176** is generally a directed beam and is not radiated in all directions. In one embodiment, positioning system **174** also includes at least one reflector **179** which may be controlled to alter the direction output beam **176** in directions **187** and **189**. The reflector **179** may be tilted to alter the elevation of collimated beam **176** by positioning system **174**.

Housing **180**, in the illustrated embodiment, is a pod which is detectably coupled to airplane **102** (see FIG. **2**). Referring to FIG. **5**, housing **180** includes a set of couplers **181** which cooperate with couplers **183** on asset to couple housing **180** to airplane **102**. In one embodiment, housing **180** is coupled to airplane **102** by any suitable conventional mechanism which permits housing **180** to be later detached from airplane **102**. An exemplary system is the coupling system used with the AN/AAQ-28(V) LITENING targeting pod commercially available from Northrop Grumman Corporation located in Los Angeles, Calif.

Returning to FIG. **1**, power system **152** includes a power source **200**. In one embodiment, power source **200** is a plurality of batteries. The batteries may be rechargable batteries. Exemplary rechargeable batteries include lithium-ion batteries and lithium polymer batteries. Exemplary lithium-ion batteries include commercially available cells, such as those available from A123 Systems located in Watertown, Mass. In one embodiment, a plurality of lithium-ion cells are assembled into a battery pack **202** (see FIG. **5**). In one embodiment, these cells have a nominal amp-hour rating of 2.3 Ah and a nominal load voltage of 3.3 DCV/cell. Based thereon, battery pack **202** should be able to deliver 52.8 Vat 2.3 amps for 1 hour. Under high load (10 C (10×5×2.3 or 115 Amps)) the voltage will "squat" to approximately 2.8 volts/cell. At this level the battery pack **202** could deliver 45 Vat 115 amps (or 5 kW) for 6 min. Under severe load (20 C (20×5*2.3) or 230 amps)) the voltage would squat to approximately 2.5 volts. At this level the battery pack **202** could deliver 40 V at 230 amps (or 9 kW) for about a half minute. In one embodiment, battery pack **202** provides 28 VDC power for countermeasure device **100**.

The use of battery pack **202** allows high power to be provided to laser source module **160** without causing a large power spike requirement in the power system of asset **102**. In essence, battery pack **202** acts as a capacitor for laser source module **160**.

In one embodiment, continuous wave laser **166** is a three kilowatt Yterrbium single mode fiber laser such as ones commercially available from IPG Photonics located at IPG Photonics Corporation, 50 Old Webster Road Oxford, Mass. 01540 USA and power supply **152** provides about 28 VDC. In general, commercial laser sources from IPG Photonics include an AC-to-DC converter to convert power from an AC source to DC power for continuous wave laser **166**. Since power supply **152** already provides DC power, when a commercial laser source is being used for continuous wave laser **166** the AC-to-DC converter is removed and replaced with a DC driving circuit **320** (see FIGS. **6** and **7**) which corresponds high voltage power supply **164**. DC driving circuit **320** provides power from power supply **152** to continuous wave laser **166** and regulates the power level provided.

Referring to either FIG. **6** or FIG. **7**, continuous wave laser **166** is represented. Continuous wave laser **166**, as explained in connection with FIG. **4**, includes a laser pump system **322** which includes a plurality of laser diodes **310**. Laser diodes **310** provide the pump energy for the lasing medium **316** of continuous wave laser **166**. The lasing medium **316** is provided as part of a fiber optical cable. The output of the lasing medium **316** is provided to optical conduit **170**.

In FIG. **6**, power supply **152** is coupled to laser diodes **183** through DC driving circuit **320** which includes a single voltage regulator **326** that powers laser diodes **310**. In FIG. **7**, power supply **152** is coupled to laser diodes **310** through DC driving circuit **320** which includes a plurality of current regulators **328**. Each current regulator **328** provides the power to one of the modules **300** (see FIG. **4**) to provide power to the diodes of that module **300**.

Referring to either FIG. **6** or FIG. **7**, power supply **152** may be charged with a battery charger **330** coupled to a prime power source **332**. Battery charger **330** is contained within housing **180**. Exemplary prime power sources include a standard AC wall outlet. Power supply **152** includes a battery management interface **334** which controls the recharging of the batteries with battery charger **330**.

In one embodiment, power system **152** is recharged by a power source **338** of the asset **102**. An exemplary power source **338** is a DC generator of asset **102**. Referring to FIG. **8**, a controller of asset **102** determines if asset **102** is operating and stationary (or otherwise operating at a low power level), as represented by block **350**. The controller checks an operational sensor **352** to determine if asset **102** is operational. Exemplary operational sensors include engine sensors which indicate the operation of propulsion devices **108**. The controller also checks in the case of an airplane **102**, a wheel down sensor **354**, which indicates when the landing gear of airplane **102** is lowered. If the controller determines that airplane **102** is stationary (wheels down) and operational, then the controller provides charging energy to battery charger **330**, as represented by block **356**. In one embodiment, airplane **102** does not need to be stationary, but rather only be operating at a low power level, such as flying at a moderate speed. In this case, the controller monitors a power load of airplane **102** and provides charging energy to battery charger **330** when the power load is below a threshold amount.

Cooling system **156** provides cooling to the other components of countermeasure device **100**. In one embodiment, cooling system **156** provides cooling to laser source module **160**. In one embodiment, cooling system **156** provides cooling to laser source module **160** and the optical components of beam control module **162**. In one embodiment, cooling system **156** provides cooling fluid to power system **152**, laser source module **160**, and the optical components of beam control module **162**. Cooling system **156** may be either air-cooled or liquid cooled. Exemplary cooling systems are provided from Thermo Tek, Inc. located at 1200 Lakeside Parkway, Suite 200 in Flower Mound, Tex.

As indicated in FIG. **1**, the components of countermeasure device **100** are coupled to each other and to asset **102** through a digital communication system. In one embodiment, the digital communication system includes a common bus for the components within countermeasure device **100**. Although a digital communication system is illustrated, any suitable connection is acceptable between the components, such as analog connections. In one embodiment, laser source module **160** is coupled to enable input **143** and fire input **145** through dis-

crete connections outside of the digital communication system. Further, warning/cuing system **130** is coupled to system controller **154** through a separate communication connection. An exemplary communication connection is the MIL-STD-1553 Bus.

Referring to FIG. **9**, in one embodiment, countermeasure device **100** also includes a target tracking and beam pointing system **210**. Target tracking and beam pointing system **210** monitors the scene surrounding asset **102**. In one embodiment, beam pointing system **210** includes a vision system, illustratively a FLIR system **212**, which provides images of the scene surrounding asset **102**. FLIR system **212**, illustratively, has a separate optical window **178** through which the vision system monitors the location of mobile tracking device **110**. In one embodiment, FLIR system **212** uses the same optical window **190** as output beam **176** and is bore sighted to output beam **176**.

Referring to FIGS. **10**A and **10**B, an operation of countermeasure device **100** is illustrated. Referring to FIG. **10**A, a check is made by a controller **132** of asset **102** whether warning/cuing system **130** is active, as represented by block **360**. Further, warning/cuing system **130** is set to survey mode, as represented by block **362**. In survey mode, warning/cuing system **130** monitors the environment around asset **102** to determine if a mobile tracking device **110** is approaching asset **102**, as represented by block **364**. If a mobile tracking device **110** is detected by warning/cuing system **130**, then the controller **132** of asset **102** determines the coordinates of mobile tracking device **110**, as represented by block **366**. Warning/cuing system **130** may also sound an alarm or provide another indication of mobile tracking device **110** to the operator of asset **102**. Exemplary coordinates for the case when the asset is airplane **102** are the azimuth and elevation angles of mobile tracking device **110** relative to airplane **102**.

The controller **132** of asset **102** passes the coordinates of mobile tracking device **110** to countermeasure device **100**, as represented by block **368**. Countermeasure device **100** moves rotatable head **184** to the specified angular position and FLIR system **212** is directed at the specified coordinates. FLIR system **212** may be gimbaled to move independently within housing **180**. The controller **132** of asset **102** determines if mobile tracking device **110** has acquired mobile tracking device **110** with tracking module **210**, as represented by block **370**. If countermeasure device **100** has not acquired mobile tracking device **110**, new coordinates of mobile tracking device **110** are determined and passed again to countermeasure device **100**. As such, countermeasure device **100** remains slaved to controller **132**. If countermeasure device **100** has acquired mobile tracking device **110** then the initial coordinates corresponding to the lock on location of mobile tracking device **110** are saved by system controller **154**, as represented by block **371**.

Next, system controller **154** of countermeasure device **100** checks to see if countermeasure device **100** is authorized to fire continuous wave laser **166**, as represented by block **372**. Continuous wave laser **166** is authorized to fire when fire input **145** is set to fire. If continuous wave laser **166** is not authorized to fire, then an indication of this is provided to the operator of countermeasure device **100**, as represented by block **374**. Exemplary indications include visual alarms, audio alarms, tactile alarms, and combinations thereof. If continuous wave laser **166** is authorized to fire, then continuous wave laser **166** is fired at mobile tracking device **110**. Beam control module **162** has already adjusted the output direction of collimated beam **176** to coincide with the direction to countermeasure device **100**.

After countermeasure device **100** has acquired mobile tracking device **110**, beam pointing system **210** tracks the location of mobile tracking device **110** and updates the coordinates for mobile tracking device **110**, as represented by block **379**. Beam control module **162** rotates and reflector **179** tilts, as necessary, to maintain collimated beam **176** on mobile tracking device **110**.

The position of beam control module **162** is monitored to determine when it has moved a threshold amount, as represented by block **378**. Once mobile tracking device **110** has changed direction by a threshold amount, it no longer is locked on asset **102** and the threat to asset **102** is neutralized. This change in direction of mobile tracking device **110** is indicated by the change in direction of beam control module **162** to keep collimated beam **176** on mobile tracking device **110**. Once the threshold amount is reached, continuous wave laser **166** is deactivated as represented by block **381**. Control is again passed back to warning/cuing system **130** to monitor for additional mobile tracking devices **110**.

In one embodiment, the threshold amount is about 10 degrees in either the azimuth or elevation directions. In one embodiment, the threshold amount is about 5 degrees in either the azimuth or elevation directions. In one embodiment, the threshold amount is about 3 degrees in either the azimuth or elevation directions. In one embodiment, system controller **154** monitors the time since mobile tracking device **110** was acquired by countermeasure device **100** and deactivates continuous wave laser **166** once a threshold amount of time has passed.

In one embodiment, beam pointing system **210** has a narrower field of view than sensor modules **131** of warning/cuing system **130**. As such, sensor modules **131** are able to survey the surrounding environment for mobile tracking device **110** approaching from various directions, while beam pointing system **210** is fixed on the narrow portion of the environment surrounding a detected mobile tracking device **110**.

In one embodiment, warning/cuing system **130** is integrated into countermeasure device **100** and system controller **154** detects the launch of a mobile tracking device **110** based on the images captured by warning/cuing system **130**. Although various tasks are discussed as being carried out by one of warning/cuing system **130**, controller **132**, and system controller **154**, these may be carried out by a common controller.

As mentioned herein output beam **176** is produced by a continuous wave laser **166**. Output beam **176** is able to defeat mobile tracking devices **110** which modulate the incoming electromagnetic radiation even though output beam **176** is not pulsed and contains no jamming code. Output beam **176** is also effective against imaging detection systems of more advanced mobile tracking device **110**.

Referring to FIG. **11**, a ship **380** is shown having a rudder **382** and countermeasure device **100**. Also shown is a second ship **384** having a rudder **386** which directs the direction of travel of second ship **384**. Second ship **384** also incorporates a mobile tracking device **110**. Second ship **384** is attempting to track first ship **380** and close the distance between first ship **380** and second ship **384**. Mobile tracking device **110** generates course correction signals for second ship **384** so that second ship **384** continues to close on first ship **380**. In this example, mobile tracking device **110** does not include a separate propulsion system **112** and guidance system **114**. Rather, second ship **384** has its own propulsion system, such as an engine, and rudder **386** directs the travel path of second ship **384** based on input from controller **116**.

As illustrated in FIG. **3**, telescope **120** of mobile tracking device **110** attempts to collect a large amount of electromag-

net radiation to extend the viewing range of the countermeasure device **100**. The distance d indicated in FIG. **11**, corresponds to a viewing distance of mobile tracking device **110** which is the distance at which mobile tracking device **110** is first able to detect first ship **380**. At distances beyond distance d, mobile tracking device **110** is not able to see first ship **380**. Of course, mobile tracking device **110** may be closer to first ship **380** than the distance d and in fact over time mobile tracking device **110** tracks first ship **380** so that second ship **384** closes the distance between second ship **384** and first ship **380**.

Countermeasure device **100**, upon locking on the position of mobile tracking device **110**, fires continuous wave laser **166** such that output beam **176** is received by telescope **120** of mobile tracking device **110**. Output beam **176** has different effects on mobile tracking device **110** depending on the separation of mobile tracking device **110** from countermeasure device **100**. Distance d is illustratively divided into three bands, a near distance band **392**, a mid distance band **394**, and a far distance band **396**. At distances in near distance band **392**, the energy of output beam **176** explodes seeker head **115** and destroys mobile tracking device **110**. At distances in mid distance band **394**, the energy of output beam **176** destroys the functionality of detector **118**. In one example, a countermeasure device **100** including a 3 kW Yterrbium continuous fiber laser as continuous wave laser **166** destroyed a focal plane array detector of a mobile tracking device **110** at a distance of about 3 kilometers.

At distances in far distance band **396**, the energy of output beam **176** produces a plurality of internal localized sources within mobile tracking device **110**. These internal localized sources are produced by the energy of output beam **176** being absorbed by the optical components of mobile tracking device **110** which then reradiate the absorbed energy in multiple wavelengths, similar to a blackbody source. Referring to FIG. **3**, six internal localized sources **400** are illustrated. Sources **400**A and **400**B correspond to filter **125**. Source **400**C corresponds to optical window **128**. Source **400**D corresponds to secondary mirror **123**. Source **400**E corresponds to primary mirror **121**. Source **400**F corresponds to optics **124**. The sources **400** may be produced based on the absorption characteristics of the material of each component or the presence of an imperfection in a component. For instance, optical window **128** may become scratched during travel resulting in an imperfection that produces source **400**C. Although six sources **400** are illustrated, a single source **400** or other number of sources **400** may be produced at various times.

The source **400** produces infrared energy which is brighter than the infrared signature of asset **102** being tracked by mobile tracking device **110**. As such, controller **116** of mobile tracking device **110** interprets the respective source **400** as asset **102** instead of asset **102** itself. If source **400** is off-axis, this will cause controller **116** to try to center source **400** resulting in error signal **129** being increased. Guidance system **114** will then turn mobile tracking device **110** in an attempt to center source **400**. This results in mobile tracking device **110** turning away from the location of asset **102**. Since source **400** is radiating from a portion of mobile tracking device **110**, it cannot be centered. In one embodiment, the power level of continuous wave laser **166** is about 3 kW exiting countermeasure device **100**.

Source **400** do not explode mobile tracking device **110**, such as what happens in near distance band **392**, nor is detector **118** of mobile tracking device **110** destroyed, such as what happens in mid distance band **394**. Rather, source **400** confuses controller **116** to believe that one or more (if multiple sources) additional objects are present in the field of view of mobile tracking device **110** with a higher intensity than asset **102**. Controller **116** tracks the brightest object in its field of view and thus attempts to track one of sources **400**, instead of asset **102**.

In far distance band **396**, mobile tracking device **110** is not destroyed, but rather sent off course. As mobile tracking device **110** approaches countermeasure device **100** the power level of output beam **176** increases exponentially resulting in detector **118** being destroyed in mid distance band **394** and/or mobile tracking device **110** exploding in near distance band **392**. Of course, if mobile tracking device **110** is engaged in far distance band **396** mobile tracking device **110** likely will not enter mid distance band **394** because mobile tracking device **110** will be directed in a different direction due to output beam **176**.

In one embodiment, a wavelength of the continuous wave laser **166** and a power of the continuous wave laser are selected to cause at least one of an interference effect and a destructive effect to one of the sensor of the mobile tracking device and a guidance system of the mobile tracking device. In one embodiment, the interference effect is a heat energy absorption of the continuous wave laser and a re-radiation of energy within the guidance system of the mobile tracking device. In one embodiment, the interference effect include at least one of heating and electromagnetic interference which create an undesired interference with the sensor or guidance system of the mobile tracking device. In one embodiment, the destructive effect includes at least one of melting, ablating, fracturing, signal destruction, data transfer destruction, erasure of data, modification of data; unprogrammed signal inputs/outputs from integrated circuits in one of the sensor of the mobile tracking device and a guidance system of the mobile tracking device.

The effects of sources **400** are shown through a comparison of FIGS. **14** and **15** with FIGS. **12** and **13**. Referring to FIG. **12**, a typical response of a mobile tracking device **110** in far distance band **396** is shown. The degree of turn being carried out by a mobile tracking device **110** is proportional to a voltage associated with a gyroscope of the seeker head **115**. In FIG. **12**, a raw voltage of detector **118** is shown as curve **250**. Also shown is the voltage associated with the gyroscope of the seeker head **115** as curve **252**. The amplitude of curve **252** corresponds to error signal **129**. The curve **252** shown in FIG. **12**, represents a mobile tracking device **110** which has locked onto an asset **102** and is following directly behind the asset **102**. The Fourier transform of curve **250** is shown in FIG. **13**. As shown in FIG. **13**, the spectrum **254** for curve **250** is generally tightly defined around 1000 Hz. This is generally consistent with the modulation scheme of the mobile tracking device **110** when it is inline with asset **102**.

Referring to FIG. **14**, a 3 kilowatt, continuous wave, infrared, Ytterbium single mode fiber laser with an m^2 of 1 was used as continuous wave laser **166** of countermeasure device **100** associated with an asset **102**. In tests, a mobile tracking device **110** was fired at asset **102**. Countermeasure device **100** directed a continuous beam of optical energy **176** at the optical window **128** of mobile tracking device **110**. The continuous beam of optical energy causes the generation of sources **400** which are falsely recognized by mobile tracking device **110** as asset **102**.

Referring to FIG. **14**, the corresponding curves **250'** and **252'** for the above example are shown. A first portion **260** of curve **250'** (and corresponding portion **262** of curve **252'**) are shown prior to activation of continuous wave laser **166**. As shown by portion **262**, the travel of mobile tracking device **110** is fairly straight. Continuous wave laser **166** is activated

at point **264**. This results in detector **118** being flooded with IR energy as represented by the increase in amplitude of curve **250'** and the generation of sources **400**. The generation of sources **400** appears to be later in time potentially indicating the need for the components of mobile tracking device **110** to heat up to cause sources **400**. At portion **264** of curve **252'** controller **116** is instructing guidance system **114** to turn mobile tracking device **110** more aggressively. This increase in turning of mobile tracking device **110** increases in portion **266** even as the intensity of curve **250'** falls in portion **268**. This fall in intensity is indicative of mobile tracking device **110** moving far off course so that not as much of collimated beam **176** enters optical window **128**. As shown in FIG. **15**, the spectrum **254'** for curve **250'** is considerably broadened compared to spectrum **254** of FIG. **12**.

Referring to FIG. **16**, mobile tracking device **110** is traveling in a direction towards asset **102**, as represented by block **410**. This is illustrated in FIG. **2**A wherein an airborne mobile tracking device **110** is shown traveling in direction **412** towards asset **102**. As explained herein, countermeasure device **100** fires continuous wave laser **166** to direct output beam **176** towards mobile tracking device **110**. This causes the generation of at least one localized source **400** within mobile tracking device **110** which is within a field of view of mobile tracking device **110**. These one or more localized sources **400** are brighter than the infrared energy radiated from asset **102** and are generated at locations which do not correspond with the current direction **412** of mobile tracking device **110**, as represented by block **414** in FIG. **16**. As such, controller **116** attempts to point mobile tracking device **110** at the brighter source **400** and in doing so changes the direction of mobile tracking device **110** to direction **416** as shown in FIG. **2**B. Beam control module **162** alters the direction of output beam **176** to coincide with the new direction of mobile tracking device **110**, as represented by block **420** in FIG. **16**. This again causes the generation of the localized sources **400** within mobile tracking device **110** which are within a field of view of mobile tracking device **110**. As such, controller **116** attempts to point mobile tracking device **110** at the brighter source **400** and in doing so changes the direction of mobile tracking device **110** to direction **422** as shown in FIG. **2**C. Beam control module **162** alters the direction of output beam **176** to coincide with the new direction of mobile tracking device **110**. Once again this causes the generation of the localized sources **400** within mobile tracking device **110** which are within a field of view of mobile tracking device **110**. As such, controller **116** attempts to point mobile tracking device **110** at the brighter source **400** and in doing so changes the direction of mobile tracking device **110** to direction **424** as shown in FIG. **2**D. In moving beam control module **162** to track mobile tracking device **110** along the direction **424**, rotatable head **184** exceeds the threshold rotation amount and continuous wave laser **166** is deactivated, as shown in FIG. **2**D.

Unlike prior art countermeasure devices, countermeasure device **100** is not mobile tracking device **110** specific. Rather, countermeasure device **100** is effective against both imaging and non-imaging mobile tracking devices **110**. Countermeasure device **100** relies on the continuous provision of optical energy into mobile tracking device **110** to produce localized sources **400** within the field of view of mobile tracking device **110** such that detector **118** is confused as to the location of asset **102**.

In another example of the use of countermeasure device **100**, a 3 kW, continuous wave, infrared, Ytterbium single mode fiber laser was used as continuous wave laser **166** of countermeasure device **100** associated with an asset **102**. In tests, a plurality of different mobile infrared mobile tracking devices **110** were fired at asset **102** while asset **102** was at ground level. Countermeasure device each time **100** directed output beam **176** at the optical window of the respective mobile tracking device **110**. The countermeasure device **100** was effective against all of the plurality of different mobile tracking device **110** at a range of up to about 1250 meters from countermeasure device **100**. A computer model was made wherein asset **102** was at ground level, a wavelength of continuous wave laser **166** was set to 1.07 μm, and values for additional parameters countermeasure device **100** and mobile tracking device **110** were set. The computer model provided a predicted range of up to 1290 meters for a plurality of different mobile tracking device **110**. This computer model demonstrated good agreement with the experimentally obtained range of up to 1250 meters.

In a further example of the use of countermeasure device **100**, a 3 kilowatt, continuous wave, infrared, Ytterbium single mode fiber laser was used as continuous wave laser **166** of countermeasure device **100** associated with an asset **102**. In tests, a specific mobile tracking device **110** was fired at asset **102** while asset **102** was at ground level. Countermeasure device **100** directed output beam **176** at the optical window of mobile tracking device **110**. The countermeasure device **100** was effective against the specific mobile tracking device **110** at a range of up to about 2650 meters from countermeasure device **100**. The above-mentioned computer model provided a predicted range of up to 2440 meters for the specific mobile tracking device **110**. This demonstrates good agreement with the experimentally obtained range of up to 2650 meters.

Returning to FIG. **9**, in one embodiment, beam pointing system **210** further includes a laser designator system **214**. Laser designator system **214** includes a pulsed laser which is directed at mobile tracking device **110** and reflected therefrom. Based on the reflected signal, laser designator system **214** is able to determine a distance from countermeasure device **100** to mobile tracking device **110**. In the case wherein countermeasure device **100** includes focusing optics **177** or wherein beam expander **172** may be focused, one of system controller **154** and beam pointing system **210** adjusts a focal length of focusing optics **177** to focus output beam **176** at the location of mobile tracking device **110**. In one embodiment, output beam **176** is focused at a distance shorter than the determined range to mobile tracking device **110**, the distance being chosen based on an estimated speed of mobile tracking device **110**. In one embodiment, this distance corresponds to the expected position of mobile tracking device **110** based on assumptions regarding the relative difference in speed between asset **102** and mobile tracking device **110**. In one embodiment, the estimated speed of mobile tracking device **110** is selected based on the type of mobile tracking device **110** which is identified based on a retro-reflection received from mobile tracking device **110**.

Laser designator system **214**, illustratively, has a separate optical window **215** through which the laser beam of laser designator system **214** is sent out of countermeasure device **100** and the reflection from mobile tracking device **110** is received to determine the distance to mobile tracking device **110**. In one embodiment, laser designator system **214** uses the same optical window **190** as output beam **176** and is bore sighted to output beam **176**.

In one embodiment, continuous laser **166** is replaced with a plurality of laser sources the output of which are combined by presenting the output of each proximate the focus of beam expander **172**. In one embodiment, a first output fiber corresponding to a first laser source is surrounded by a plurality of output fibers from a respective plurality of laser sources. The

outputs of each of the fibers are incoherently combined to scale the overall laser power to a high level which may be damage or destroy large targets. In one embodiment, the outputs at the input to beam expander **172** are positioned to produce a generally Gaussian beam in the far field of beam expander **172**.

While this invention has been described as having an exemplary design, the present invention may be further modified within the spirit and scope of this disclosure. This application is therefore intended to cover any variations, uses, or adaptations of the invention using its general principles. Further, this application is intended to cover such departures from the present disclosure as come within known or customary practice in the art to which this invention pertains.

The invention claimed is:

1. An apparatus for interacting with a mobile tracking device, the apparatus comprising:

a plurality of sensor modules which monitor the environment;

a first controller portion operatively connected to the plurality of sensor modules, the first controller portion determining a presence of the mobile tracking device in the environment based on information collected by the plurality of sensor modules and a current location of the mobile tracking device;

a countermeasure system including a second controller portion which receives the current location of the mobile tracking device from the first controller portion, orients a tracking system of the countermeasure system based on the current location of the mobile tracking device, detects the mobile tracking device, updates the location of the mobile tracking device, activates a continuous wave laser, and directs a continuous beam of optical energy at the mobile tracking device.

2. The apparatus of claim **1**, wherein the controller continues to update the current location of the mobile tracking device until the countermeasure system detects the mobile tracking device, the countermeasure system using the updated current location to orient the tracking system.

3. The apparatus of claim **2**, wherein the plurality of sensor modules have a wide field of view to survey the environment around the body and the countermeasure system has a narrower field of view to focus on the location of the mobile tracking device.

4. The apparatus of claim **1**, wherein the countermeasure system includes a beam control module which controls a direction of the continuous beam of optical energy based on the updated location of the mobile tracking device.

5. The apparatus of claim **4**, wherein the continuous beam of optical energy is provided until the beam control module has caused the direction of the continuous beam of optical energy to move by a predetermined threshold amount.

6. The apparatus of claim **5**, wherein the predetermined threshold amount is three degrees.

7. The apparatus of claim **6**, wherein the countermeasure system includes a housing and beam control module includes a positioning system which includes a rotatable head coupled to the housing and including an optical window through which the continuous beam of optical energy exits counter measure system, the positioning system rotating the rotatable head to control the direction of the continuous beam of optical energy.

8. The apparatus of claim **7**, wherein the positioning system further includes a moveable optical component which may be moved to control the direction of the continuous beam of optical energy.

9. The apparatus of claim **1**, wherein the countermeasure system includes a beam control module which controls a direction of the continuous beam of optical energy based on the updated location of the mobile tracking device, the beam control module being coupled to the continuous wave fiber laser through an optical conduit.

10. The apparatus of claim **1**, wherein the continuous beam of optical energy causes the mobile tracking device to explode in a first separation band; causes components of the mobile tracking device to become inoperative in a second separation band, the second separation band corresponding to distances longer than first separation band; and causes localized internal sources within the seeker head which cause the mobile tracking device to alter its direction of travel away from an asset in a third separation band, the third separation band corresponding to distances longer than the second separation band.

11. The apparatus of claim **1**, wherein the first controller portion corresponds to a first controller and the second controller portion corresponds to a second controller, the second controller being separate from the first controller.

12. The apparatus of claim **1**, wherein a wavelength of the continuous wave laser and a power of the continuous wave laser are selected to cause at least one of an interference effect and a destructive effect to one of the sensor of the mobile tracking device and a guidance system of the mobile tracking device.

13. The apparatus of claim **12**, wherein said interference effect is a heat energy absorption of the continuous wave laser and a re-radiation of energy within the guidance system of the mobile tracking device.

14. The apparatus of claim **12**, wherein said interference effect include at least one of heating and electromagnetic interference which create an undesired interference with the sensor or guidance system of the mobile tracking device.

15. The apparatus of claim **12**, wherein the destructive effect includes at least one of melting, ablating, fracturing, signal destruction, data transfer destruction, erasure, modification; unprogrammed signal inputs/outputs from integrated circuits in one of the sensor of the mobile tracking device and a guidance system of the mobile tracking device.

* * * * *