US 20120188078A1

(19) United States

(12) Patent Application Publication

Soles et al.

(10) Pub. No.: US 2012/0188078 A1

(43) Pub. Date: Jul. 26, 2012

(54) DAMAGE DETECTION AND REMEDIATION SYSTEM AND METHODS THEREOF

(76) Inventors: **Alexander M. Soles**, Bloomington, IN (US); **Matthew R. Walsh**, Westfield, IN (US); **Eric B. Scott**, Heltonville, IN (US)

(21) Appl. No.: **13/161,935**

(22) Filed: **Jun. 16, 2011**

Related U.S. Application Data

(60) Provisional application No. 61/435,255, filed on Jan. 21, 2011.

Publication Classification

(51) **Int. Cl.**

G06G 7/80	(2006.01)
G06F 19/00	(2011.01)
G08B 21/00	(2006.01)

(52) **U.S. Cl.** **340/540**; 702/34; 235/404

(57) **ABSTRACT**

A damage detection and remediation system includes a sensing device for detecting damage events related to a structure of interest. Such damage events may include impact from a ballistic object, a tamper event, a physical impact, or other events that may affect structural integrity or cause failure. Illustratively, the sensing device is in communication with a measurement system to determine damage criteria, and a processing system which is configured to use the damage criteria to determine, for example, a direction of the initiation point of a ballistic causing the damage event.

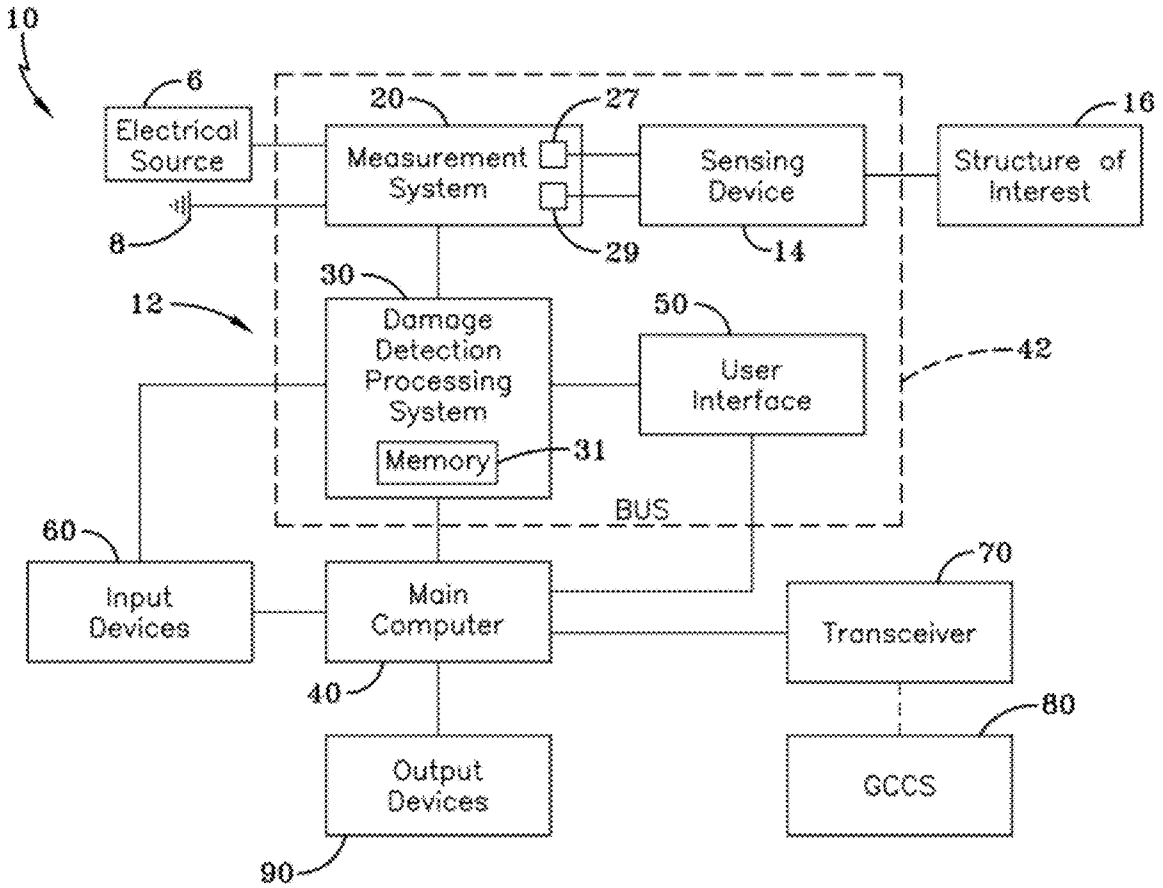

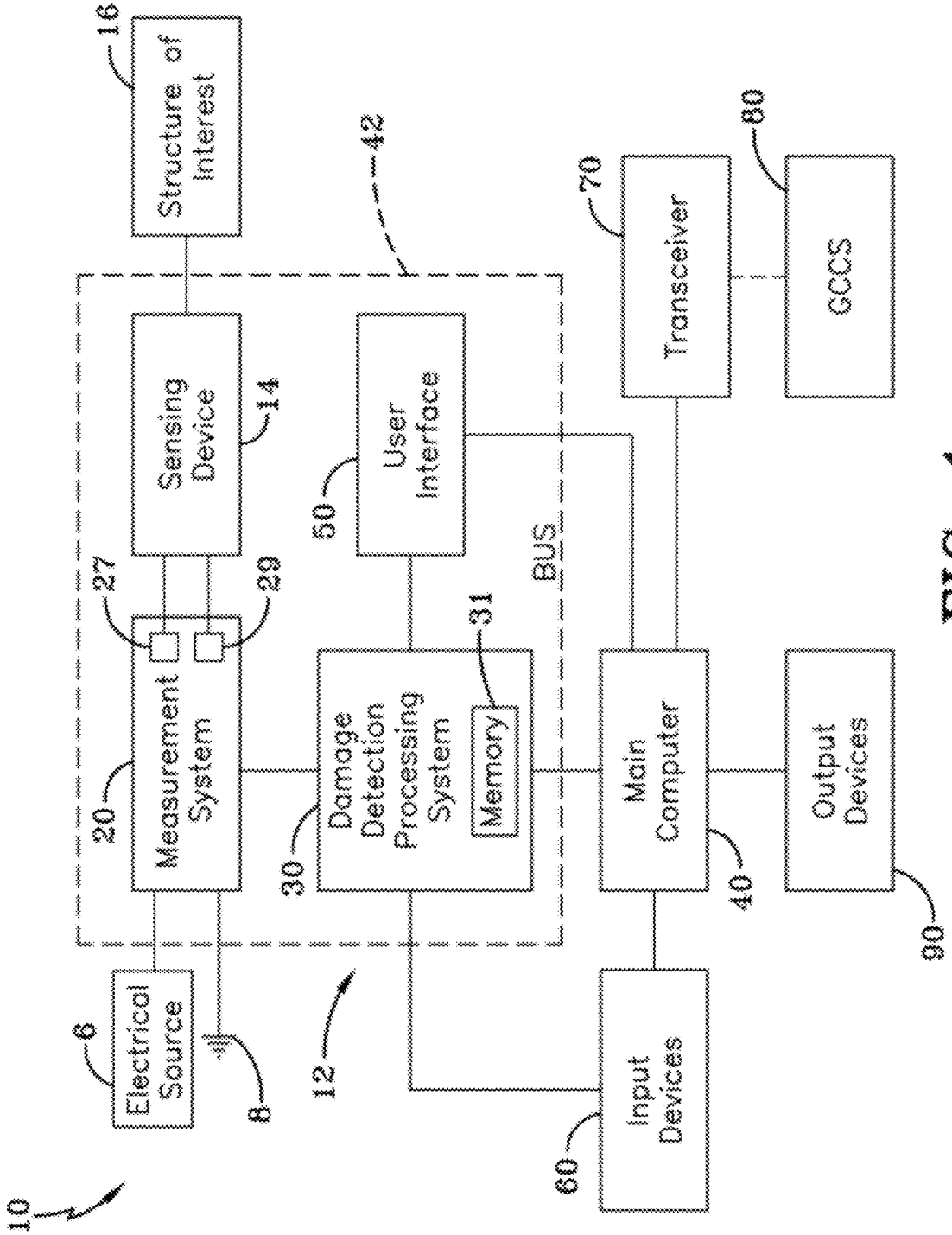
Structure of Interest
16
42
Sensing Device
14
User Interface
50
BUS
Transceiver
70
GCCS
80
27
29
31
Measurement System
20
Damage Detection Processing System
30
Memory
Main Computer
40
Output Devices
90
Electrical Source
6
8
12
Input Devices
60
10

FIG—1

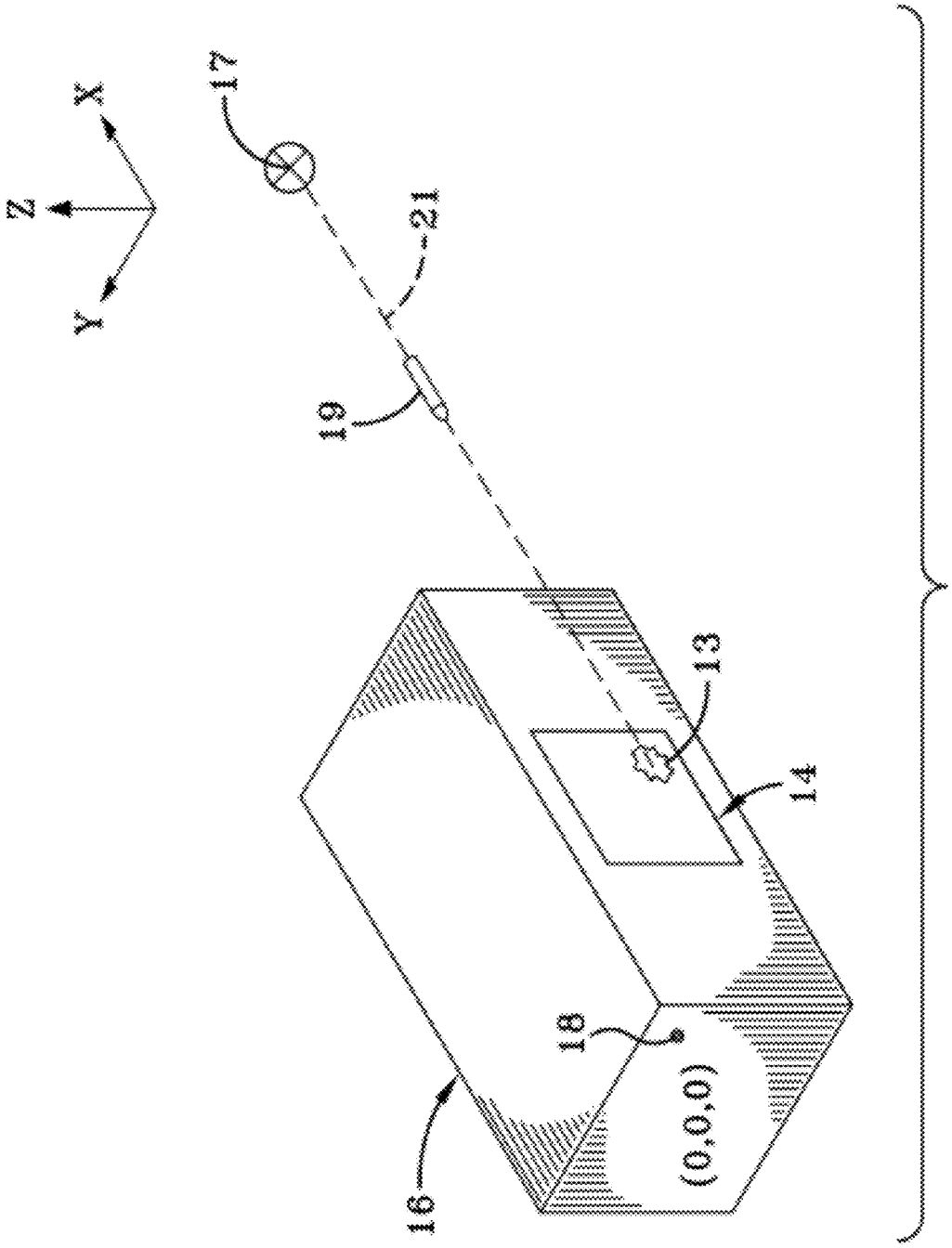

FIG—2

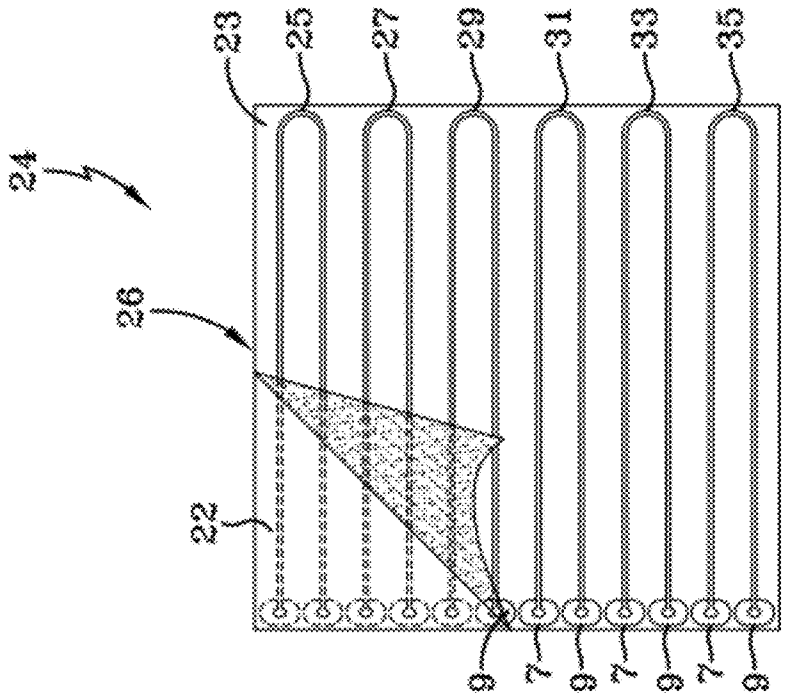

FIG—5

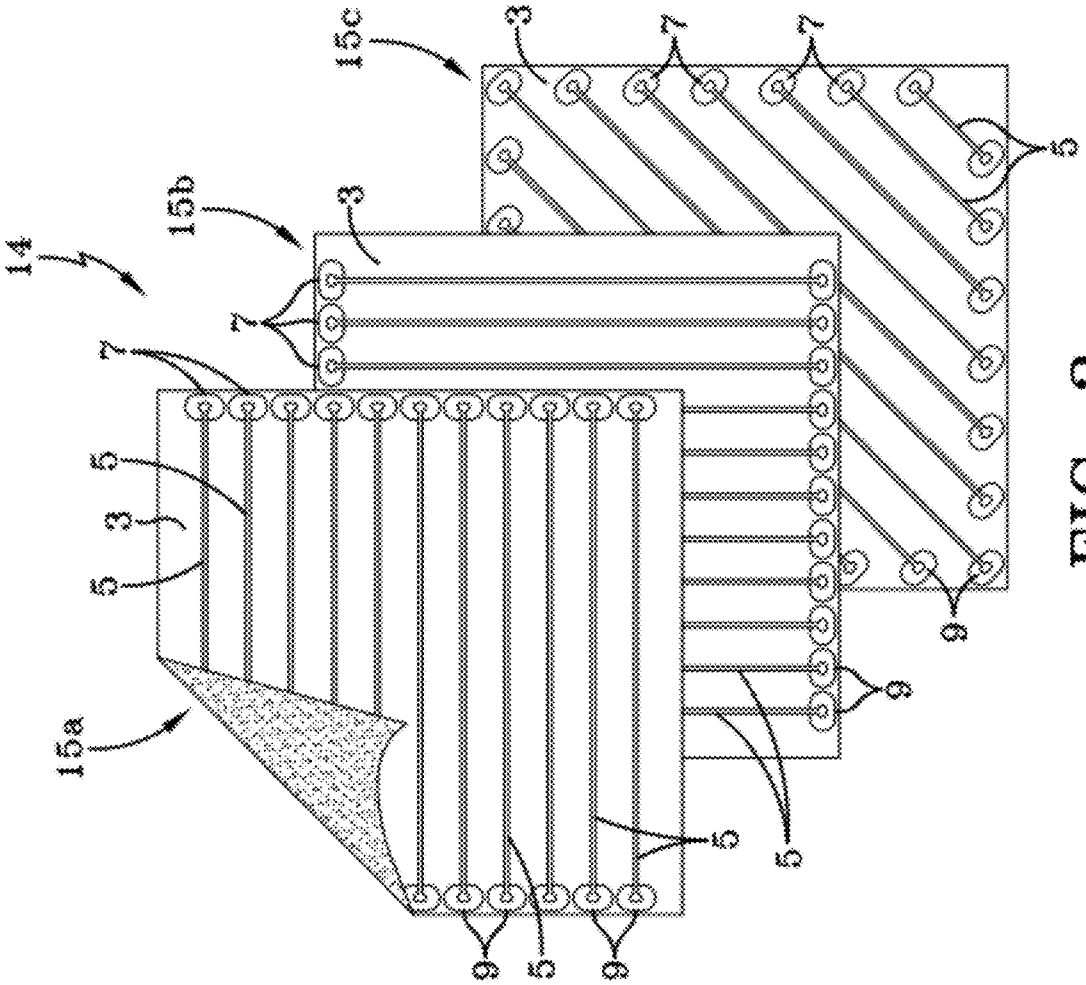

FIG—3

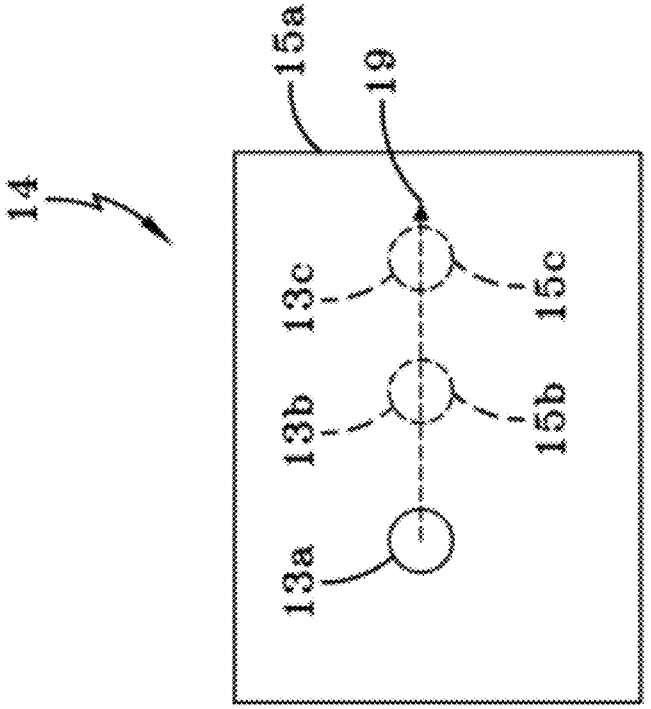

FIG—4B

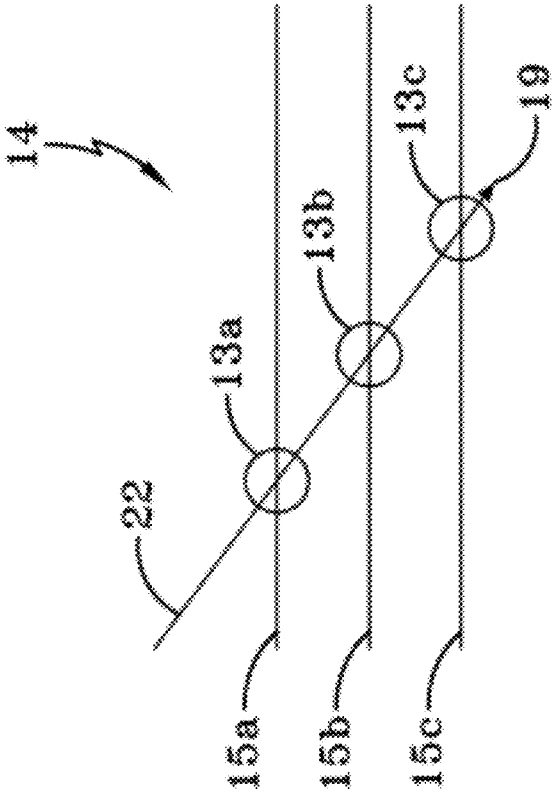

FIG—4A

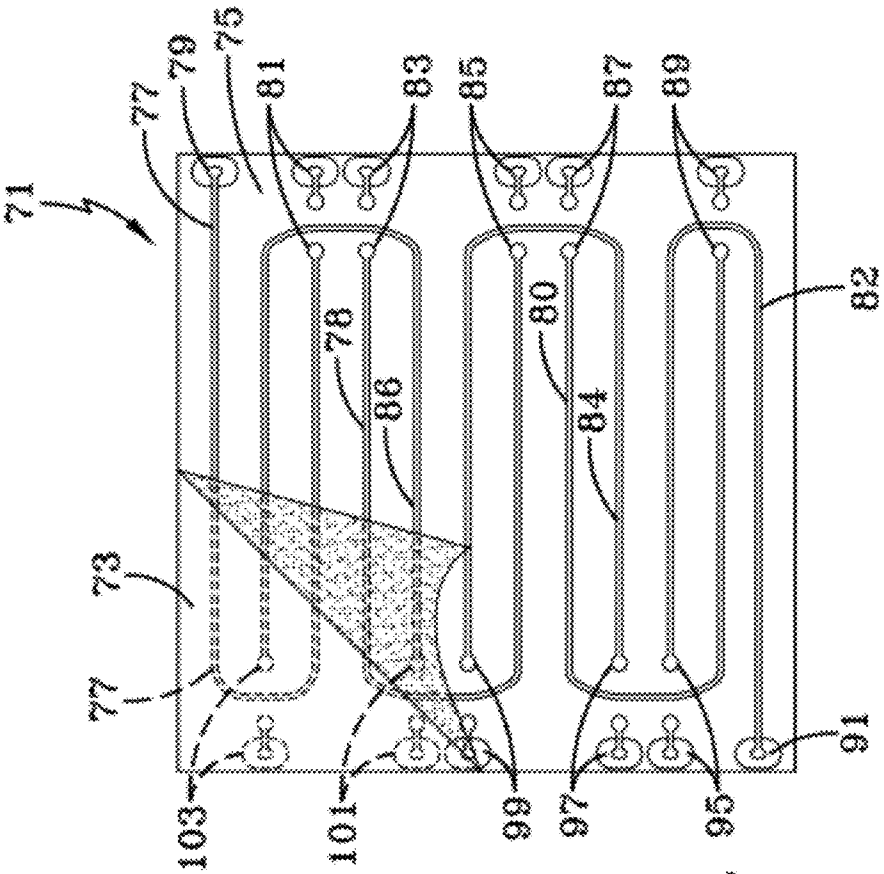
71
77
79
75
81
83
85
87
89
82
78
86
80
84
73
77
103
101
99
97
95
91

FIG—6B

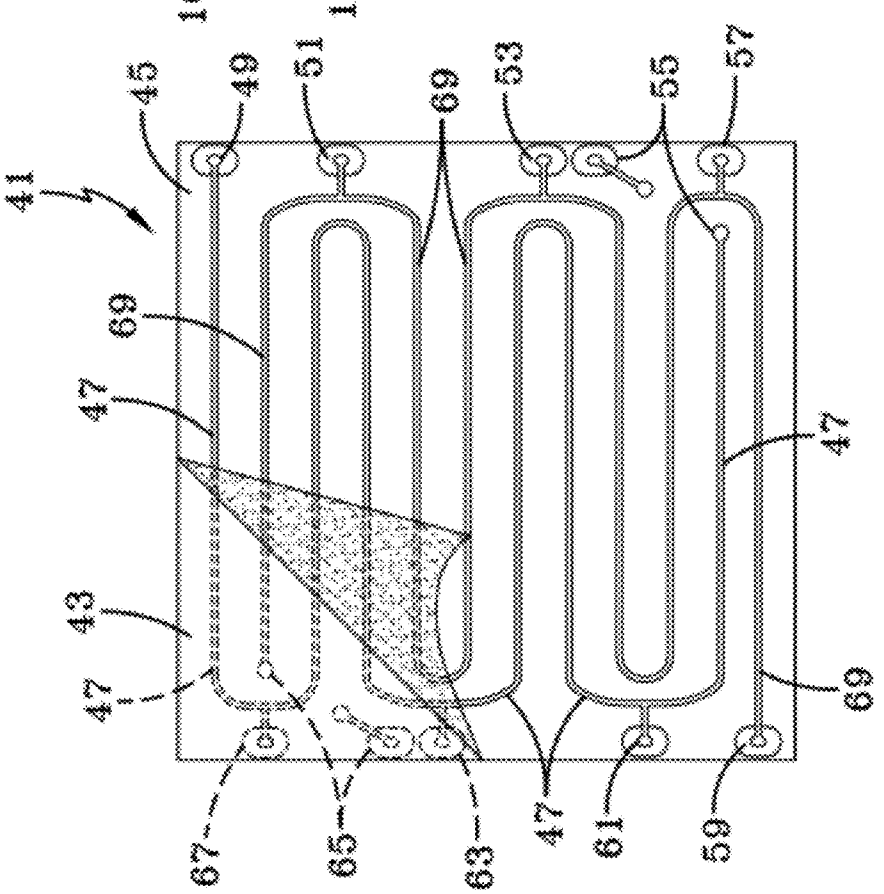
41
45
49
51
69
53
55
57
69
47
47
43
47
67
65
63
47
61
59
69

FIG—6A

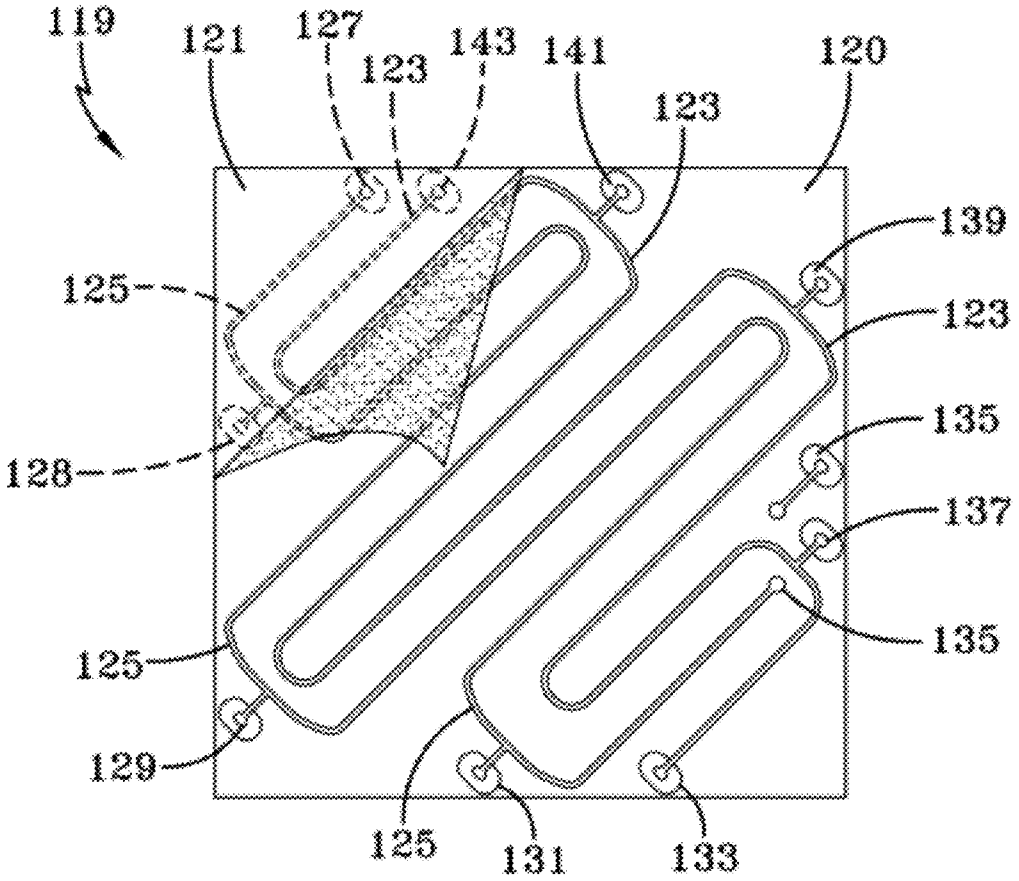
119
121
127
123
143
141
120
123
139
125
123
135
128
137
135
125
129
125
131
133

FIG-6C

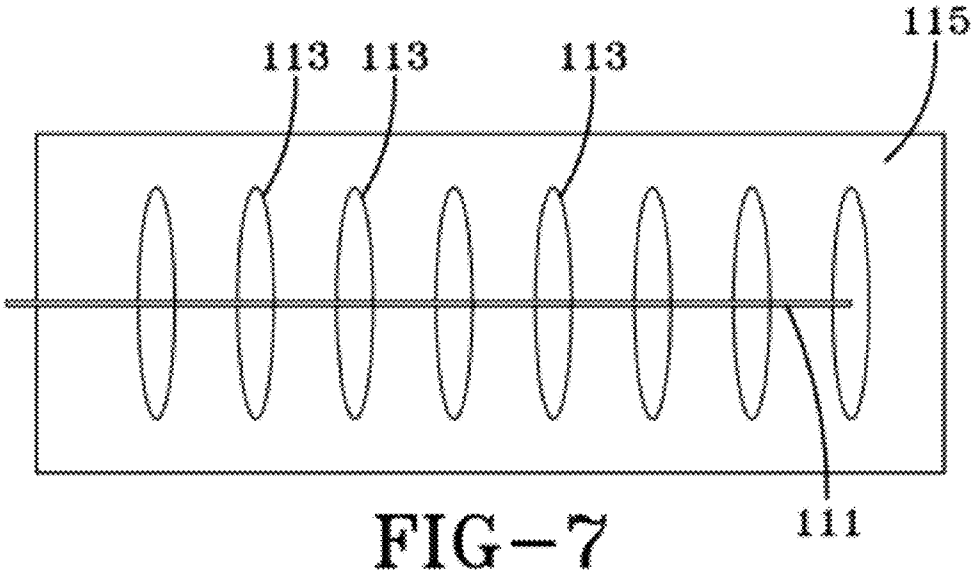
115
113
113
113
111

FIG-7

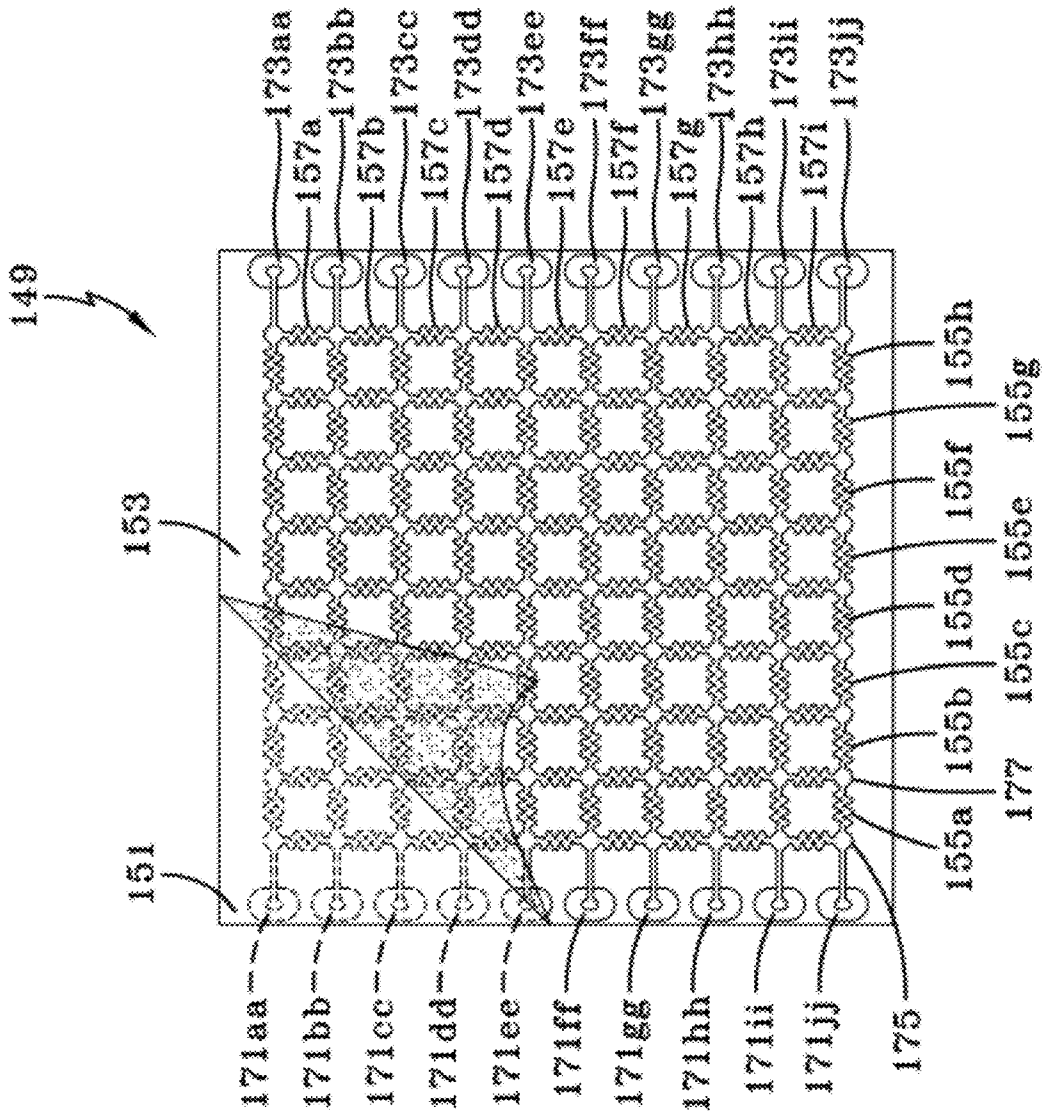
149
151
153
173aa
173bb
173cc
173dd
173ee
173ff
173gg
173hh
173ii
173jj
157a
157b
157c
157d
157e
157f
157g
157h
157i
155a
155b
155c
155d
155e
155f
155g
155h
177
175
171aa
171bb
171cc
171dd
171ee
171ff
171gg
171hh
171ii
171jj

FIG—8

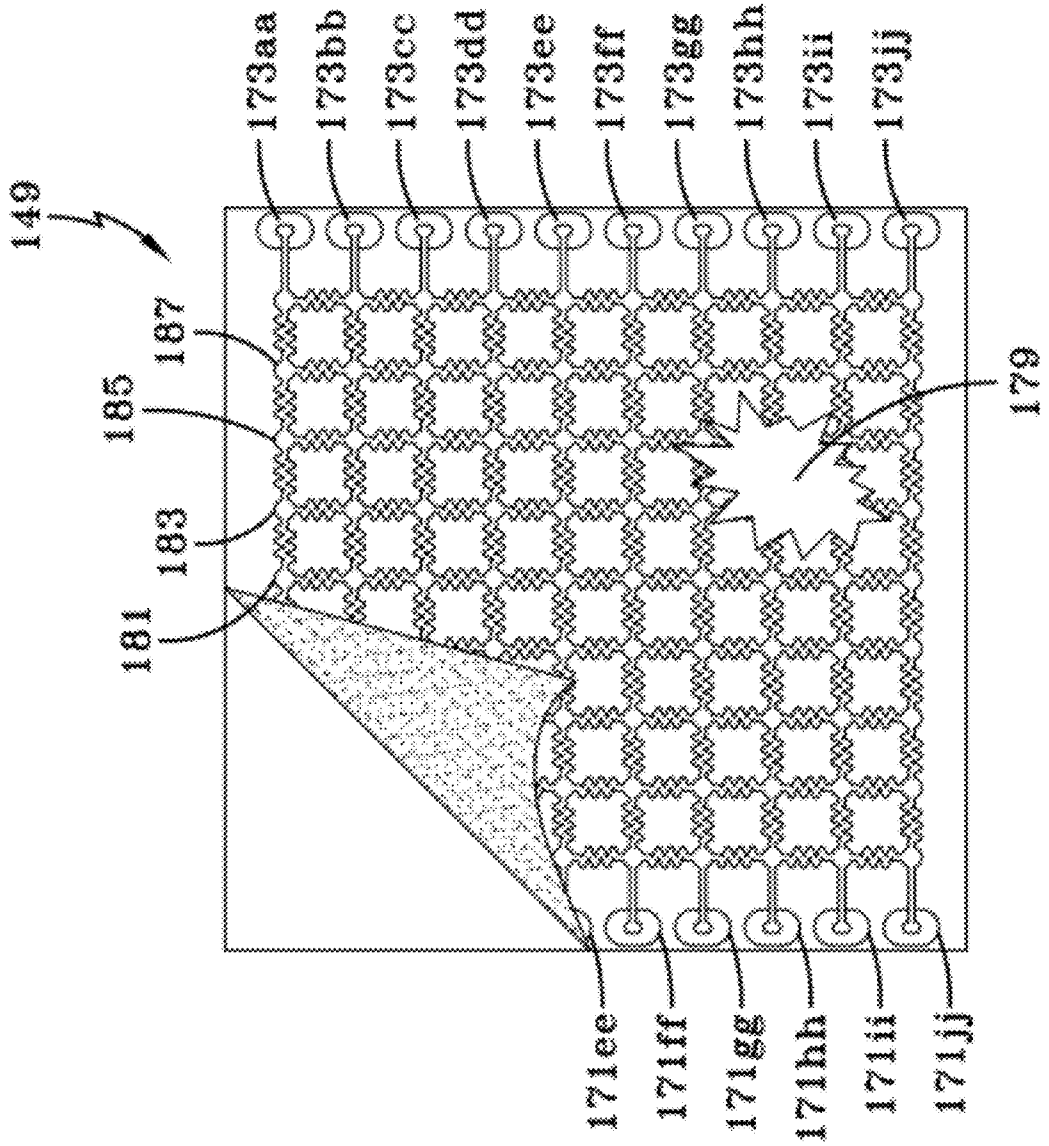
149
173aa
173bb
173cc
173dd
173ee
173ff
173gg
173hh
173ii
173jj
187
185
183
181
179
171ee
171ff
171gg
171hh
171ii
171jj

FIG—9

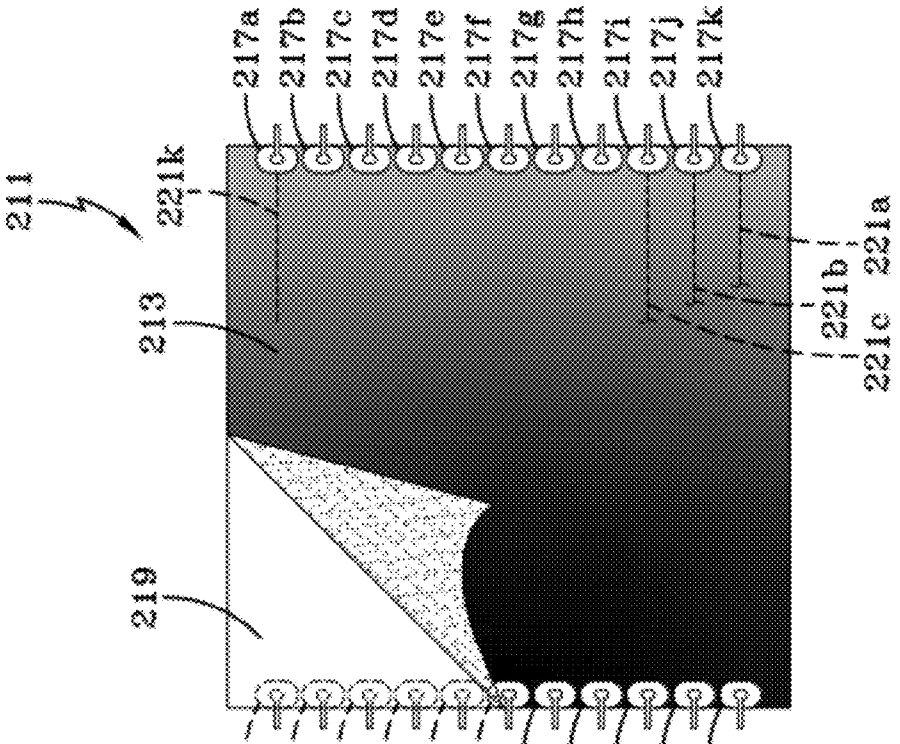
211
213
219
217a
217b
217c
217d
217e
217f
217g
217h
217i
217j
217k
221a
221b
221c
221k
215a
215b
215c
215d
215e
215f
215g
215h
215i
215j
215k

FIG—11

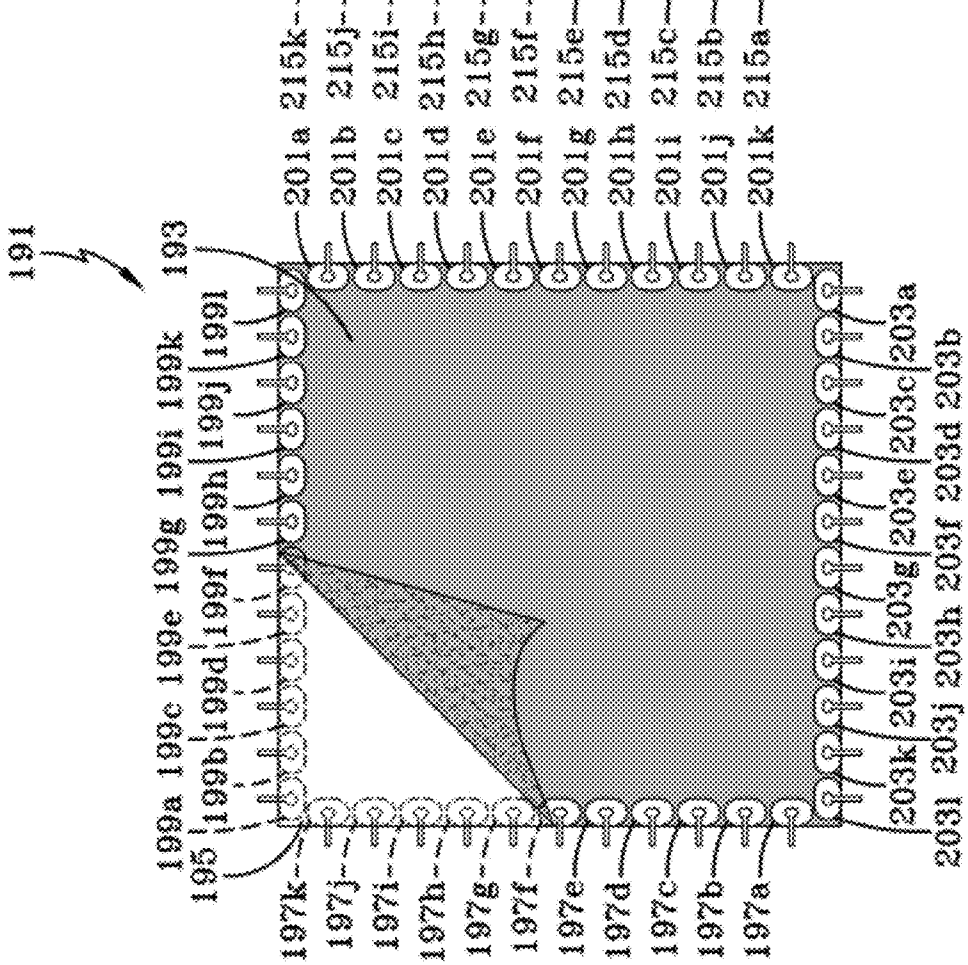
191
193
195
197a
197b
197c
197d
197e
197f
197g
197h
197i
197j
197k
199a
199b
199c
199d
199e
199f
199g
199h
199i
199j
199k
201a
201b
201c
201d
201e
201f
201g
201h
201i
201j
201k
203a
203b
203c
203d
203e
203f
203g
203h
203i
203j
203k
203l

FIG—10

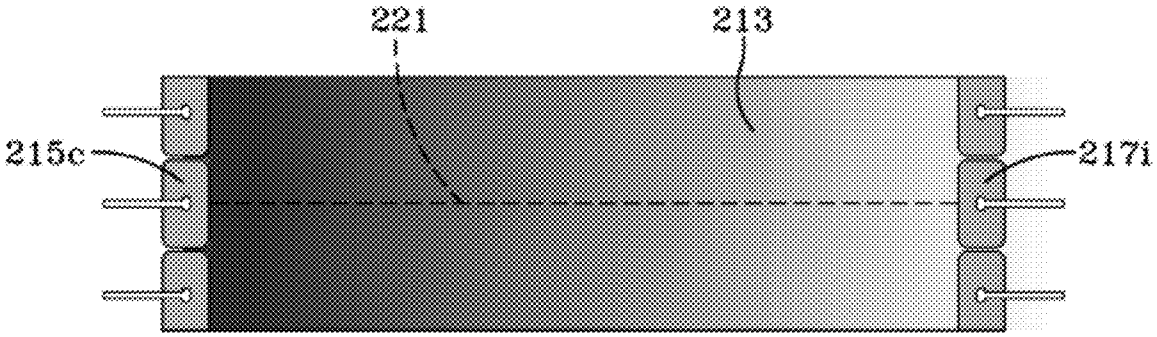

FIG-12

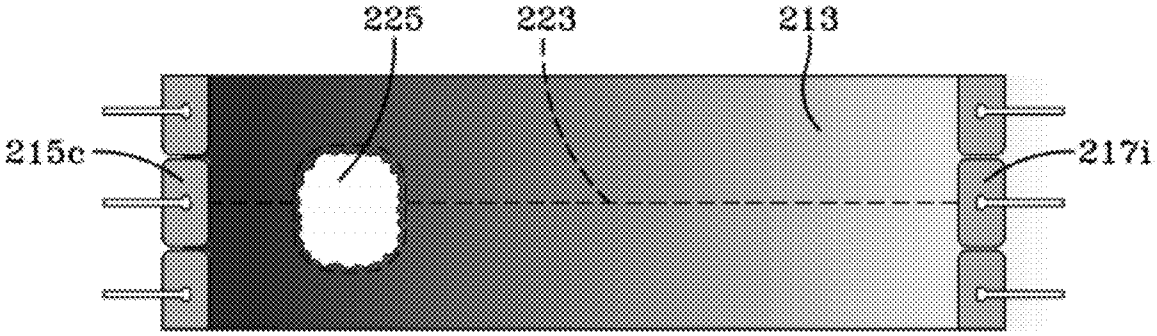

FIG-13

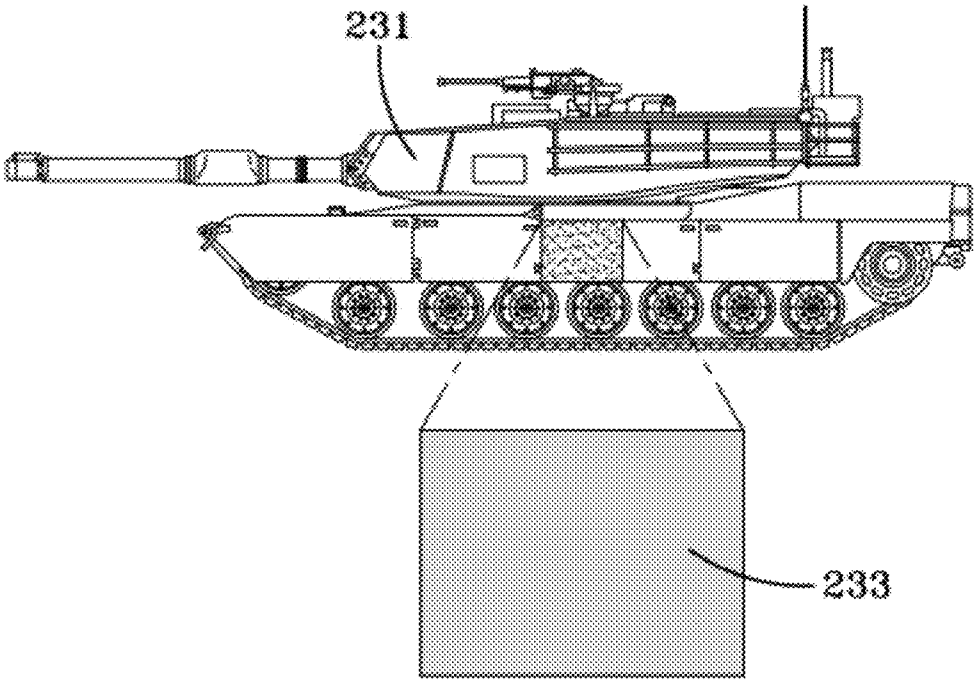

FIG-14

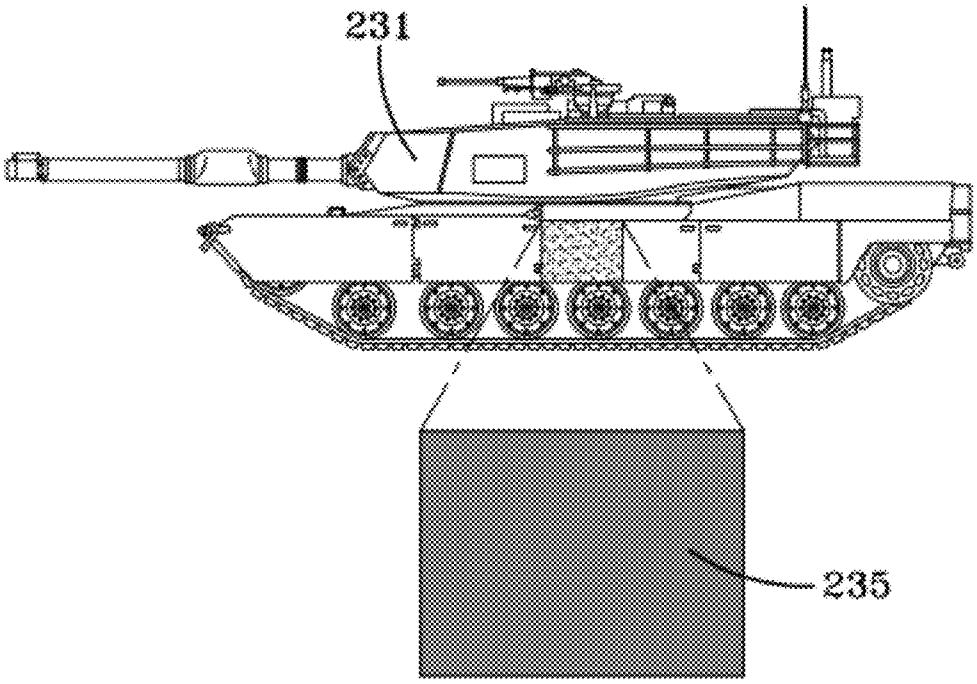

FIG-15

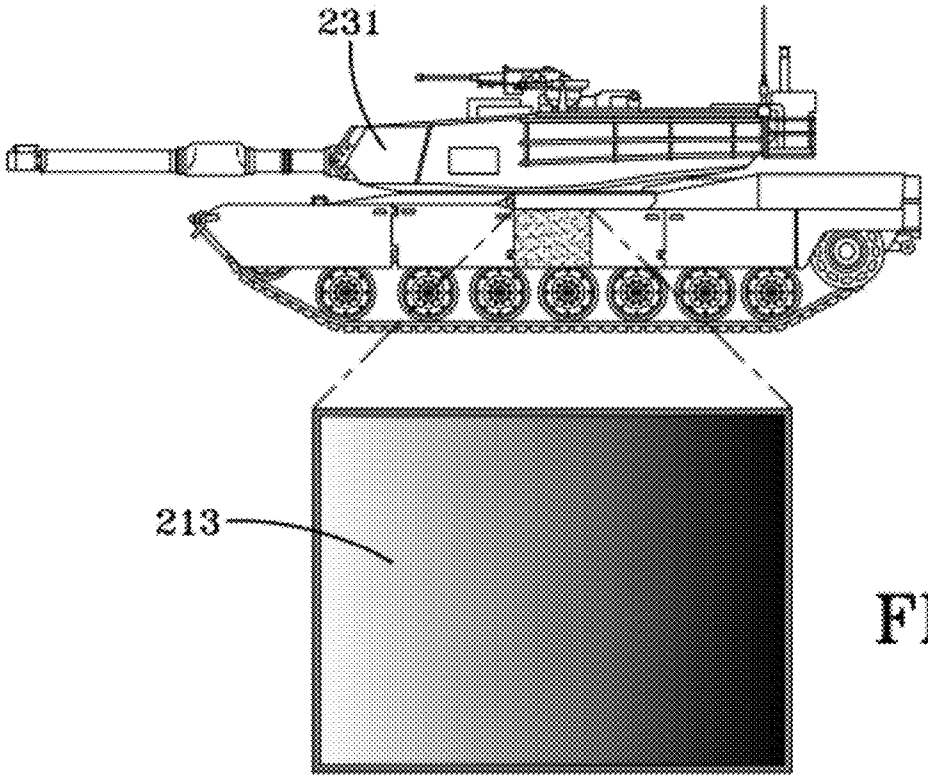

FIG-16

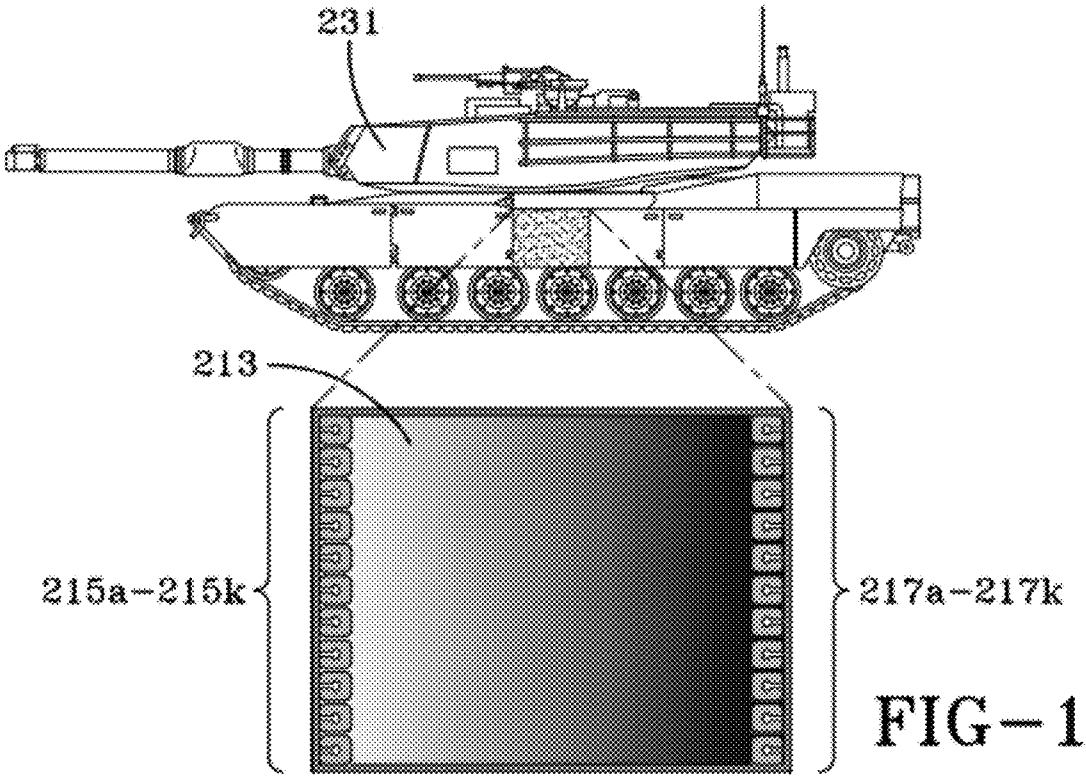

FIG-17

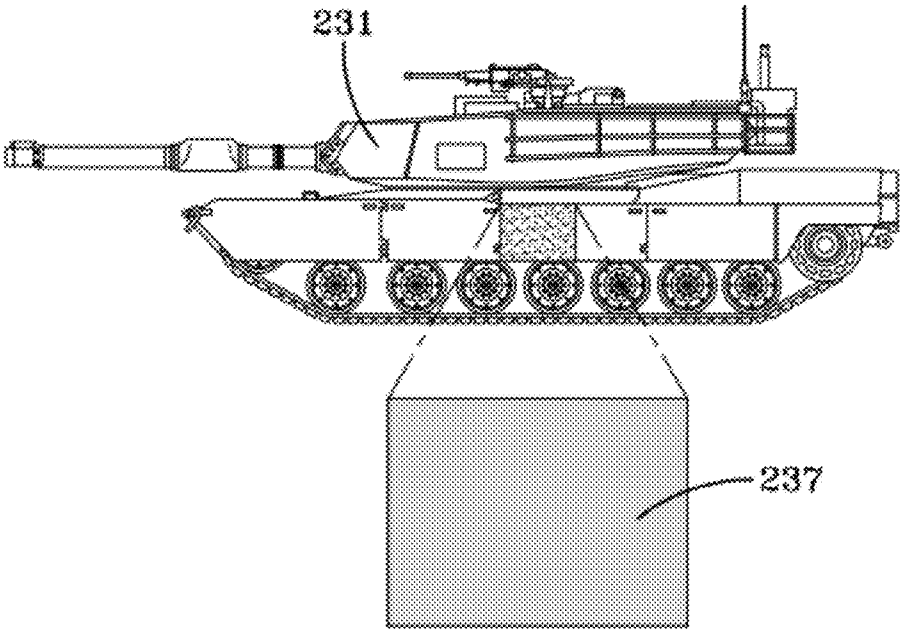
231
237

FIG-18

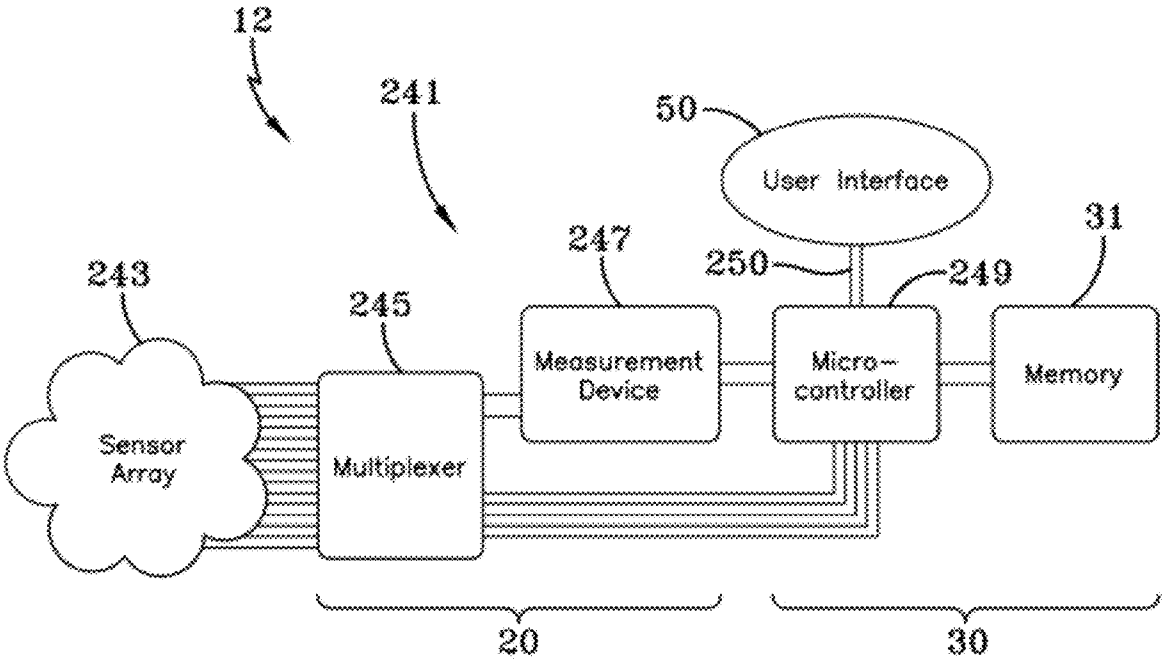
12
241
50
User Interface
31
247
250
249
243
245
Measurement Device
Micro-controller
Memory
Sensor Array
Multiplexer
20
30

FIG-19

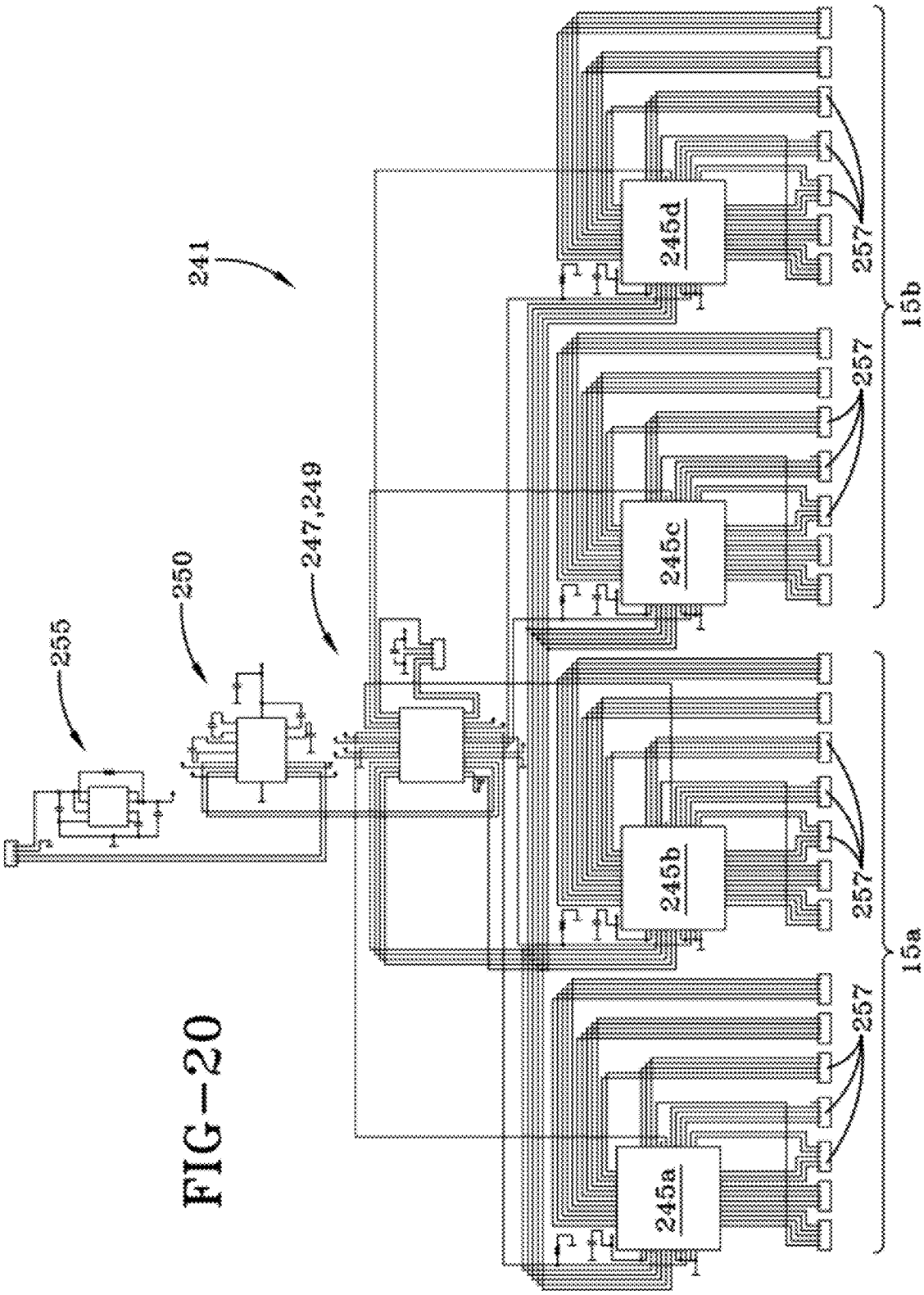

FIG—20

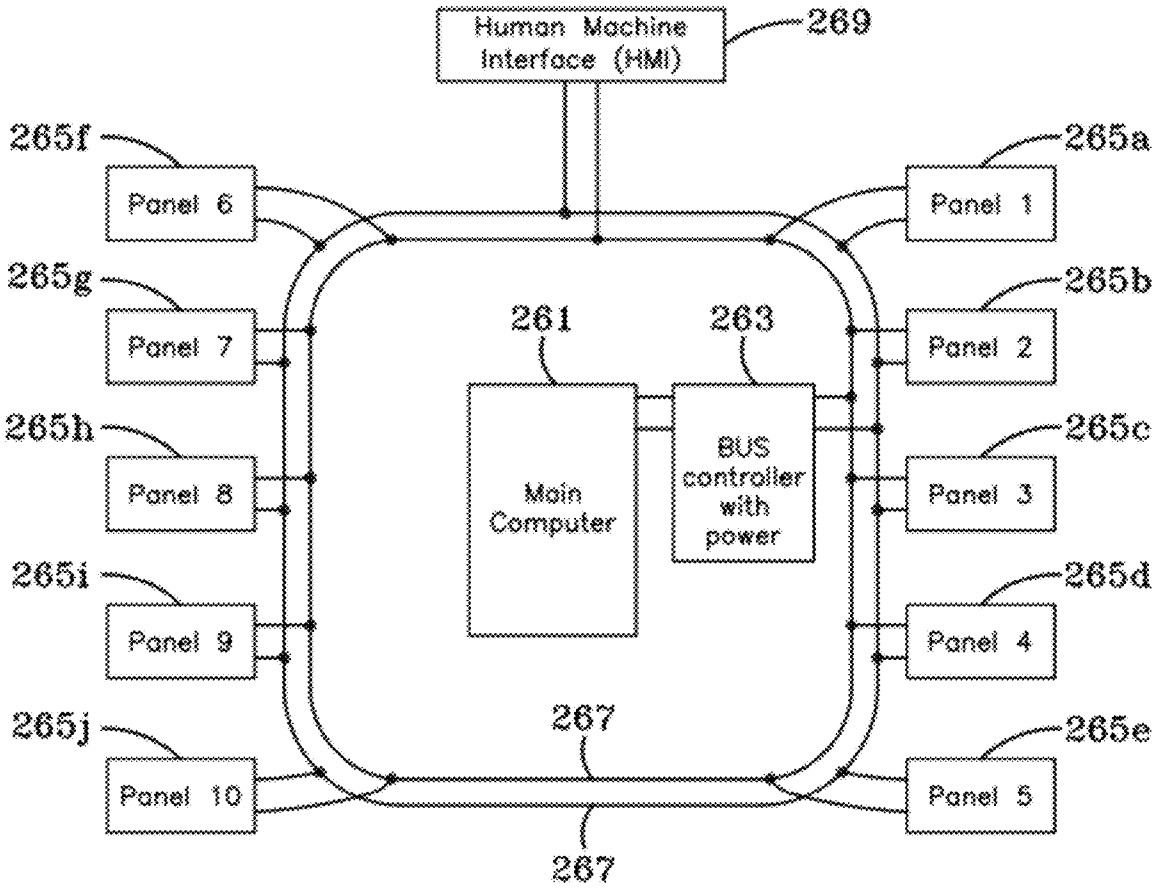
Human Machine Interface (HMI)
269
265f
Panel 6
265a
Panel 1
265g
Panel 7
265b
Panel 2
261
263
265h
Panel 8
Main Computer
BUS controller with power
265c
Panel 3
265i
Panel 9
265d
Panel 4
265j
Panel 10
267
265e
Panel 5
267

FIG-21

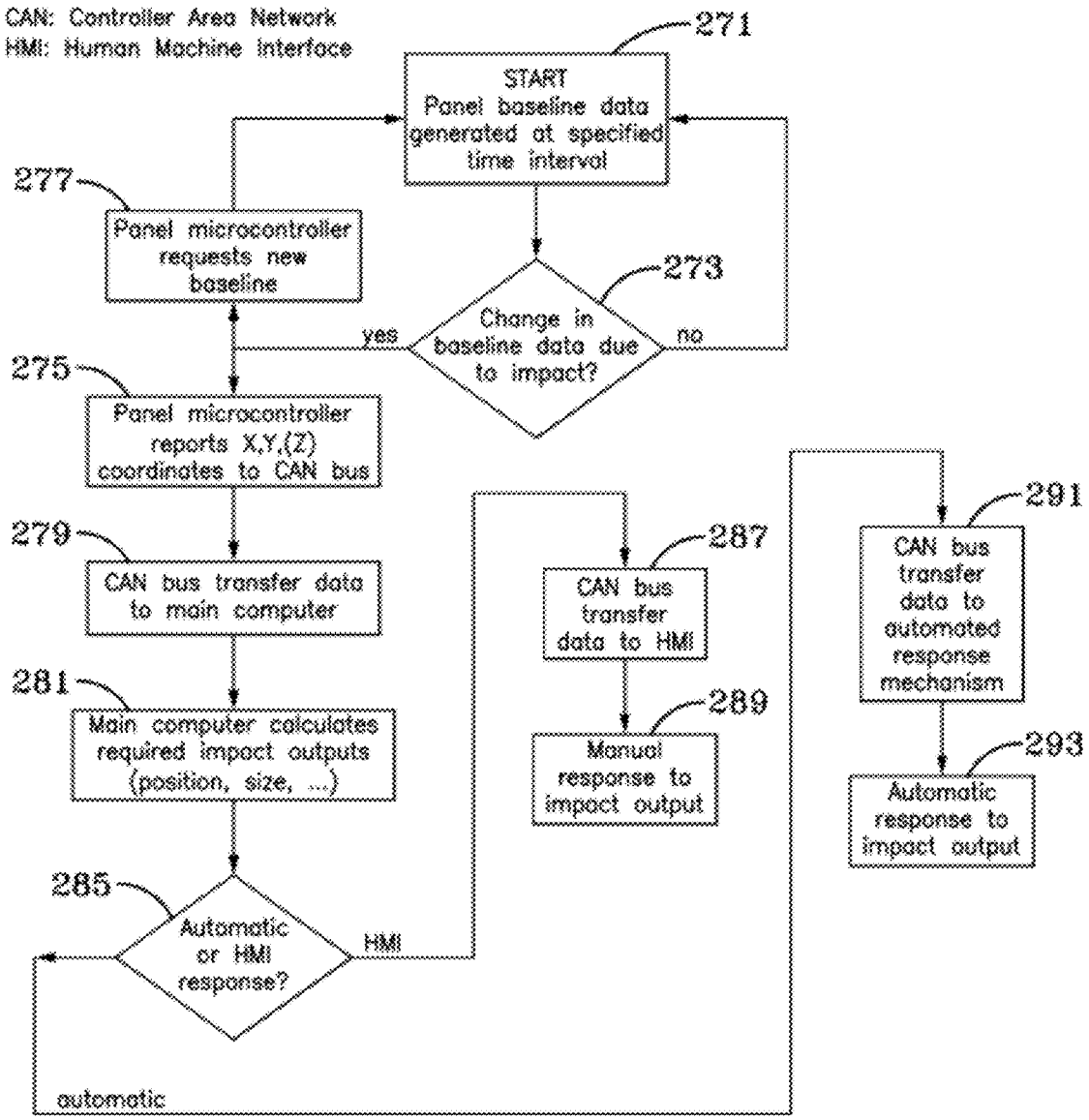
CAN: Controller Area Network
HMI: Human Machine interface
271
START
Panel baseline data generated at specified time interval
277
Panel microcontroller requests new baseline
273
Change in baseline data due to impact?
yes
no
275
Panel microcontroller reports X,Y,(Z) coordinates to CAN bus
279
CAN bus transfer data to main computer
281
Main computer calculates required impact outputs (position, size, ...)
285
Automatic or HMI response?
HMI
automatic
287
CAN bus transfer data to HMI
289
Manual response to impact output
291
CAN bus transfer data to automated response mechanism
293
Automatic response to impact output

FIG—22

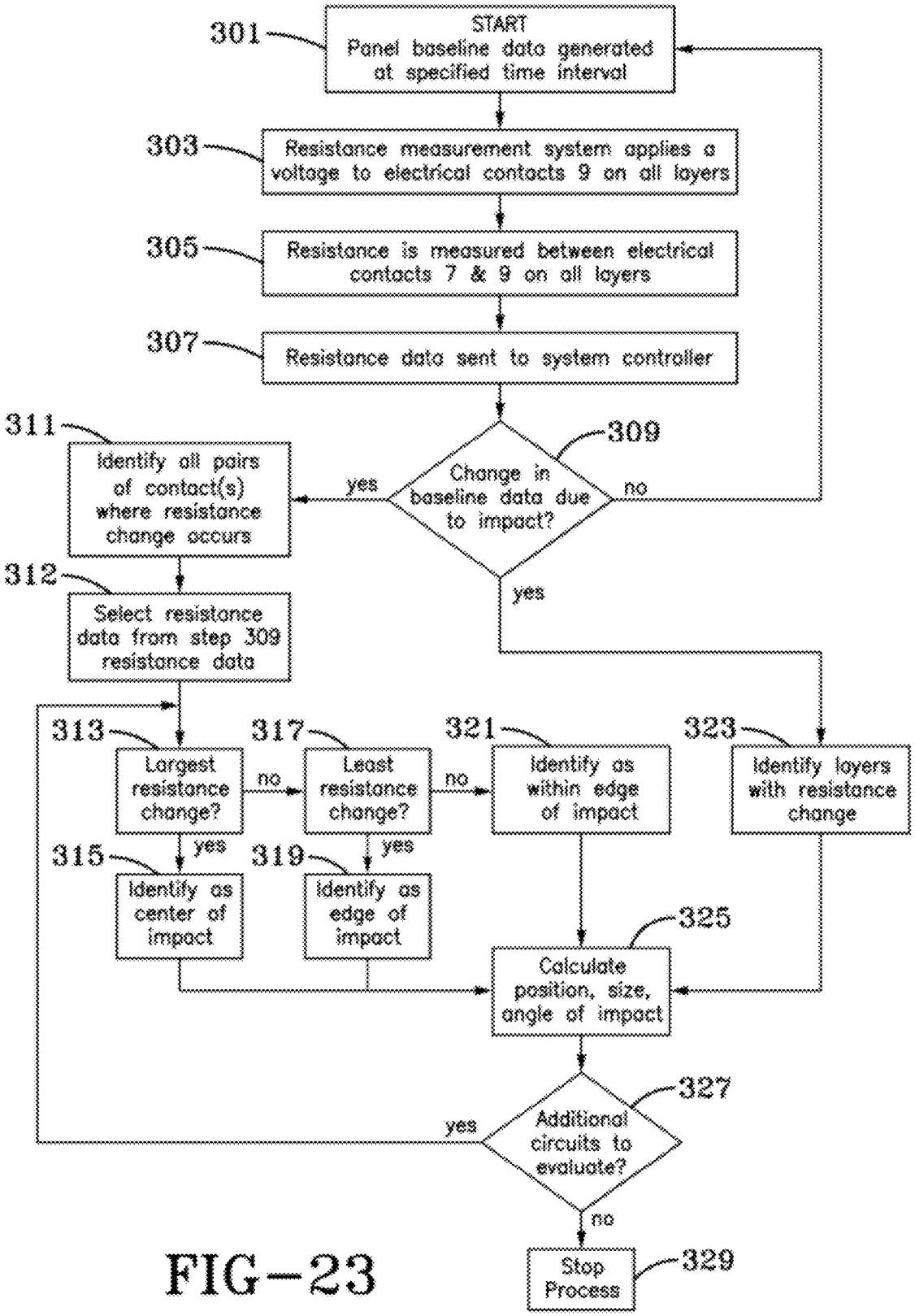
301
START
Panel baseline data generated at specified time interval
303
Resistance measurement system applies a voltage to electrical contacts 9 on all layers
305
Resistance is measured between electrical contacts 7 & 9 on all layers
307
Resistance data sent to system controller
309
Change in baseline data due to impact?
yes
no
311
Identify all pairs of contact(s) where resistance change occurs
312
Select resistance data from step 309 resistance data
313
Largest resistance change?
no
317
Least resistance change?
no
321
Identify as within edge of impact
323
Identify layers with resistance change
yes
315
Identify as center of impact
yes
319
Identify as edge of impact
325
Calculate position, size, angle of impact
327
Additional circuits to evaluate?
yes
no
Stop Process
329

FIG-23

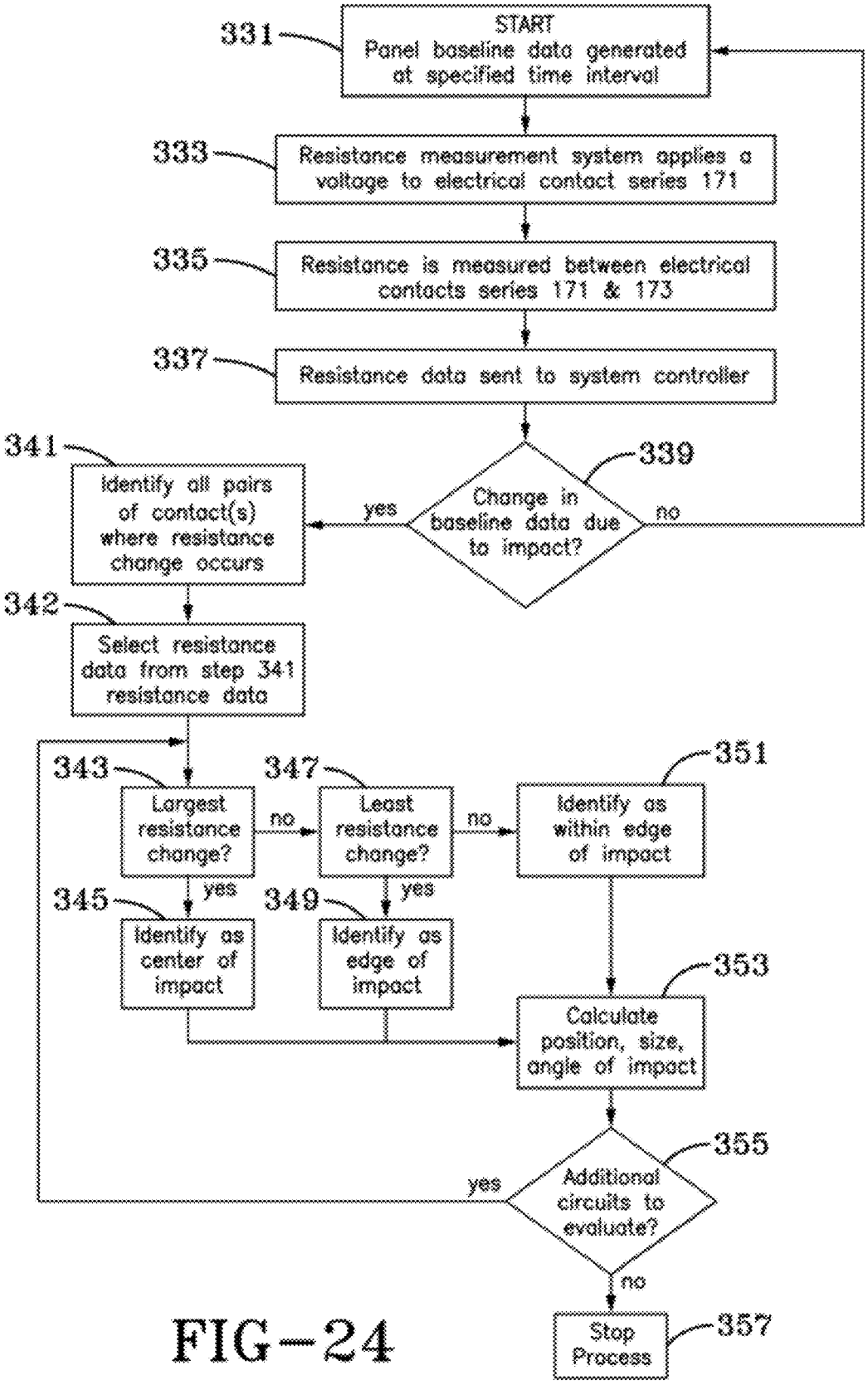
331
START
Panel baseline data generated at specified time interval
333
Resistance measurement system applies a voltage to electrical contact series 171
335
Resistance is measured between electrical contacts series 171 & 173
337
Resistance data sent to system controller
339
Change in baseline data due to impact?
yes
no
341
Identify all pairs of contact(s) where resistance change occurs
342
Select resistance data from step 341 resistance data
343
Largest resistance change?
no
347
Least resistance change?
no
351
Identify as within edge of impact
yes
345
Identify as center of impact
yes
349
Identify as edge of impact
353
Calculate position, size, angle of impact
355
Additional circuits to evaluate?
yes
no
Stop Process
357

FIG—24

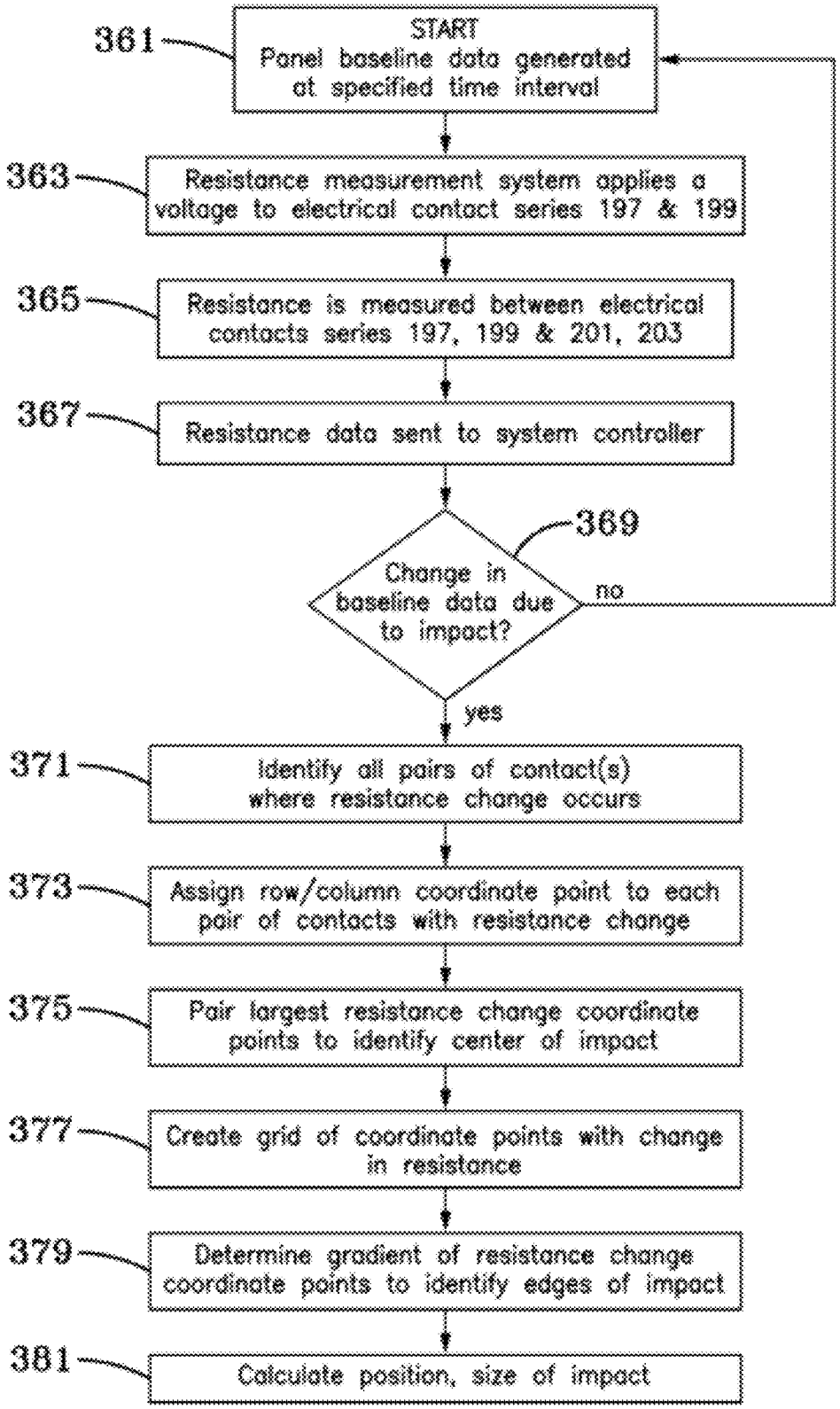
361
START
Panel baseline data generated at specified time interval
363
Resistance measurement system applies a voltage to electrical contact series 197 & 199
365
Resistance is measured between electrical contacts series 197, 199 & 201, 203
367
Resistance data sent to system controller
369
Change in baseline data due to impact?
no
yes
371
Identify all pairs of contact(s) where resistance change occurs
373
Assign row/column coordinate point to each pair of contacts with resistance change
375
Pair largest resistance change coordinate points to identify center of impact
377
Create grid of coordinate points with change in resistance
379
Determine gradient of resistance change coordinate points to identify edges of impact
381
Calculate position, size of impact

FIG–25

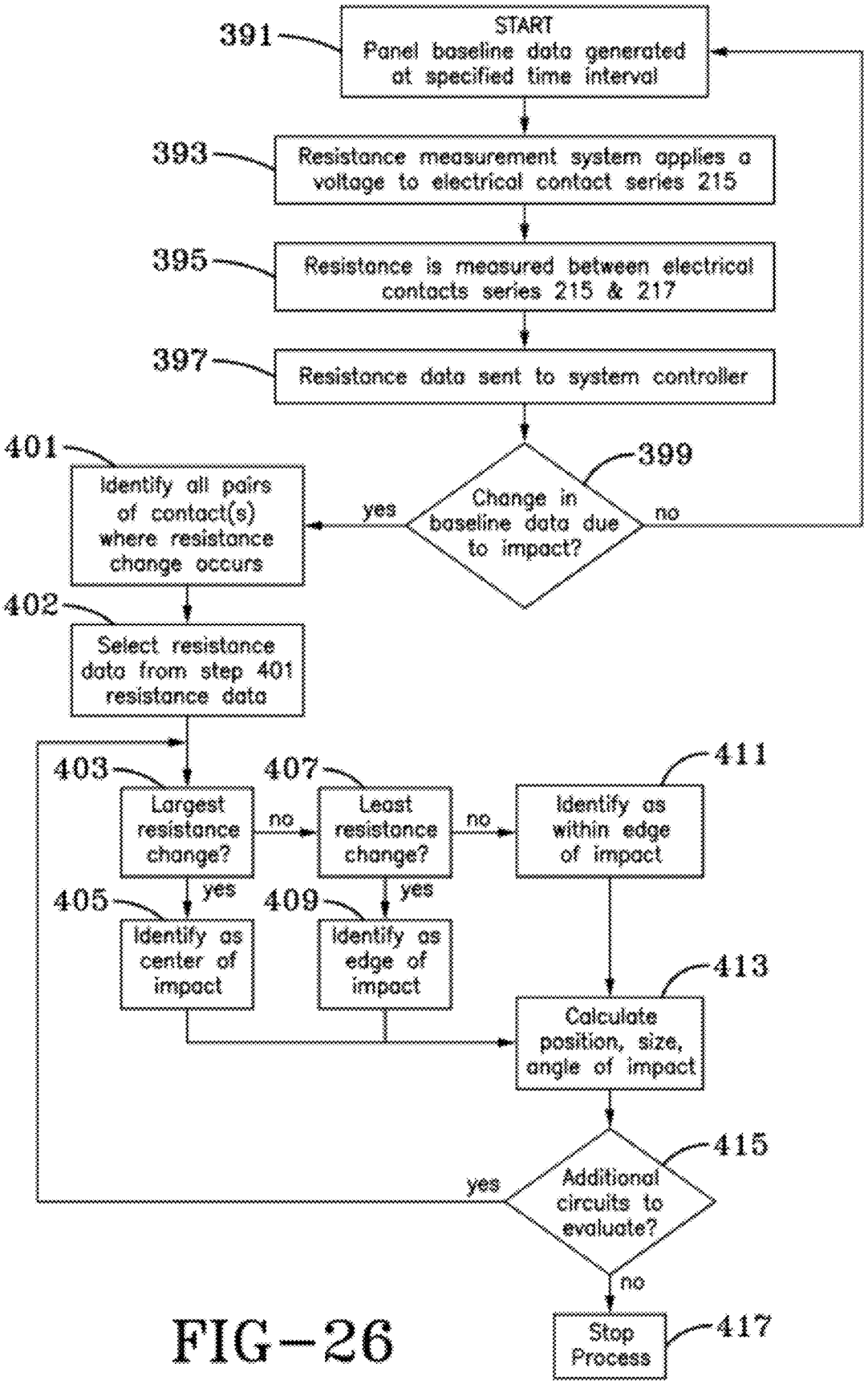
391
START
Panel baseline data generated at specified time interval
393
Resistance measurement system applies a voltage to electrical contact series 215
395
Resistance is measured between electrical contacts series 215 & 217
397
Resistance data sent to system controller
399
Change in baseline data due to impact?
yes
no
401
Identify all pairs of contact(s) where resistance change occurs
402
Select resistance data from step 401 resistance data
403
Largest resistance change?
no
407
Least resistance change?
no
411
Identify as within edge of impact
yes
405
Identify as center of impact
yes
409
Identify as edge of impact
413
Calculate position, size, angle of impact
415
Additional circuits to evaluate?
yes
no
Stop Process
417

FIG-26

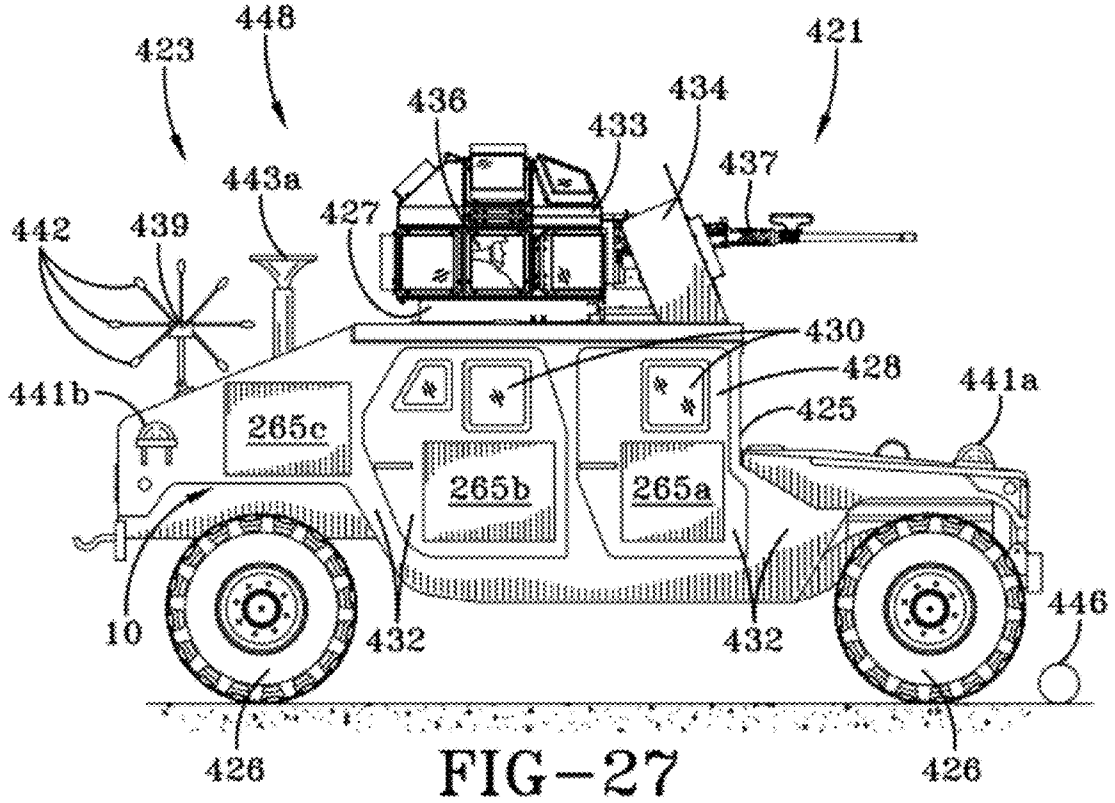
448
423
421
436
434
433
437
443a
427
442
439
430
428
441b
441a
425
265c
265b
265a
10
432
432
446
426
426

FIG–27

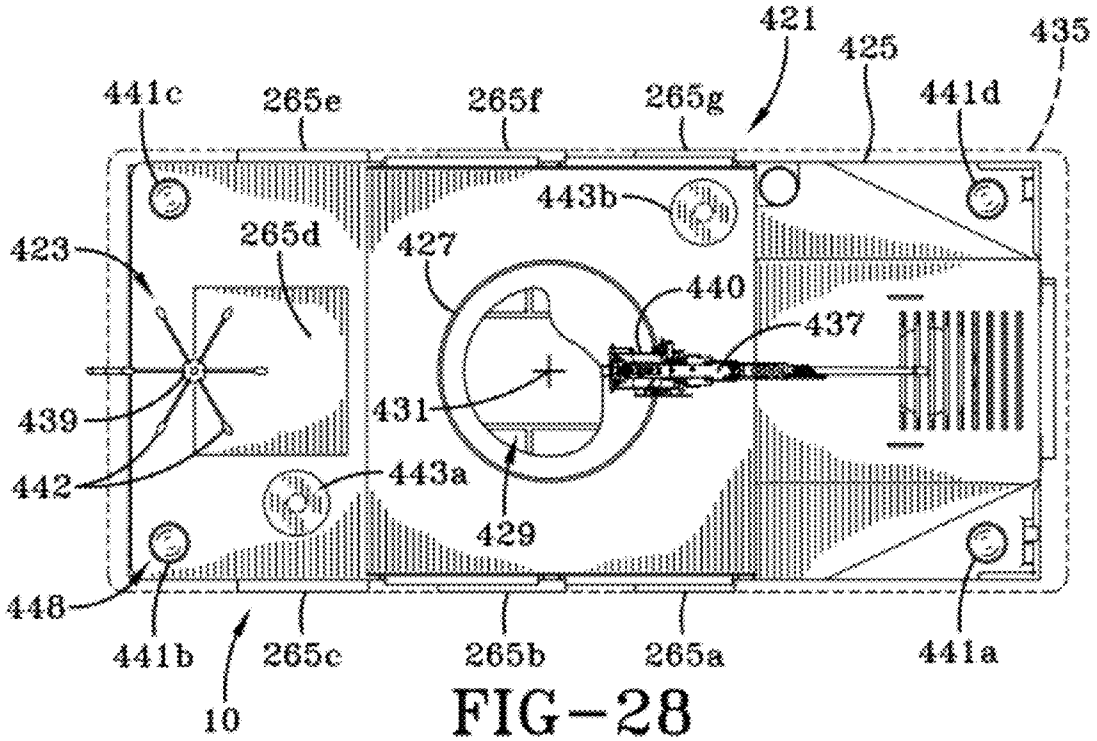
421
425
435
441c
265e
265f
265g
441d
443b
423
265d
427
440
437
439
431
442
443a
429
448
441b
265c
265b
265a
441a
10

FIG–28

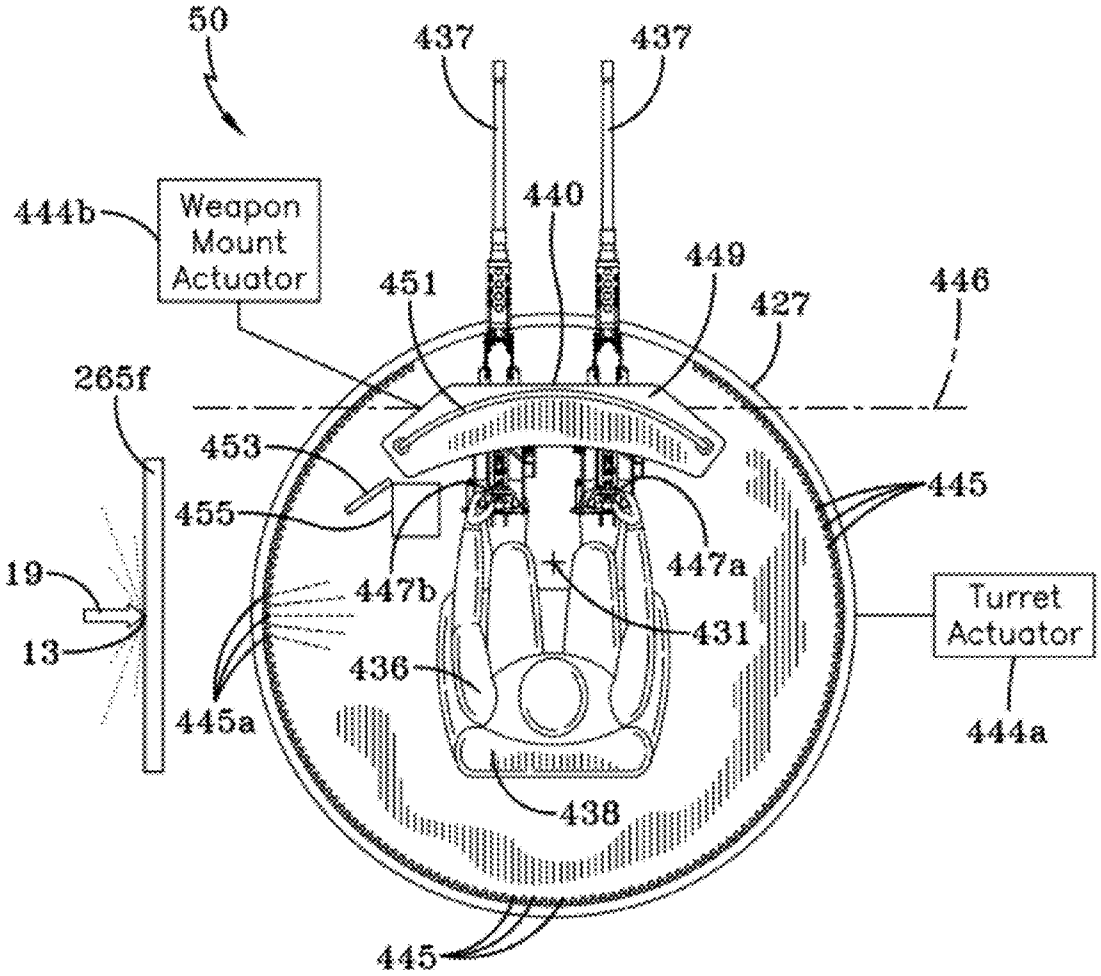
50
437
437
440
444b
Weapon Mount Actuator
451
449
427
446
265f
453
445
455
447a
19
447b
431
Turret Actuator
13
436
445a
444a
438
445

FIG–29

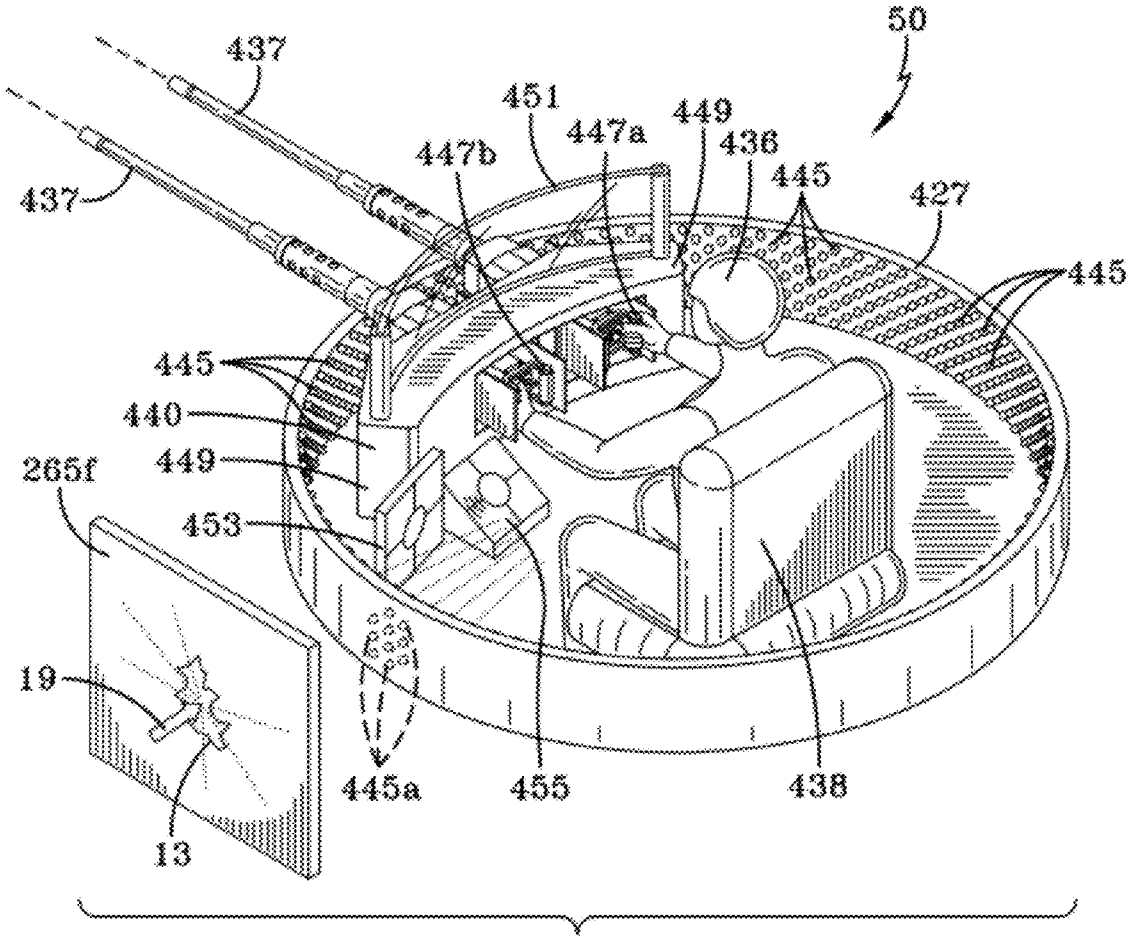

FIG-30

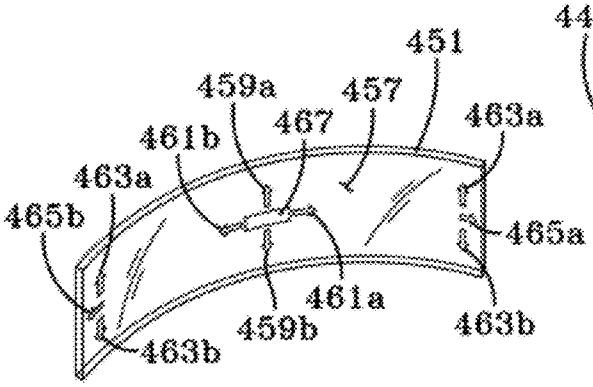

FIG-31

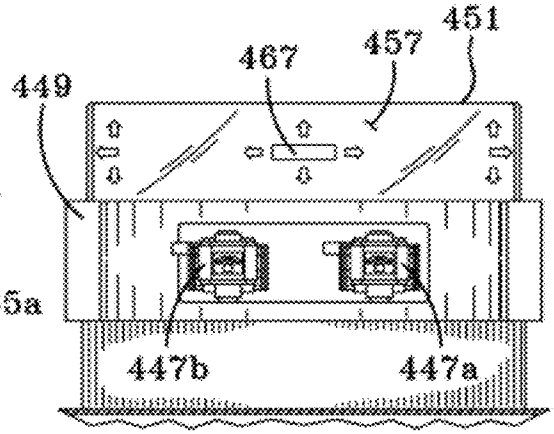

FIG-32

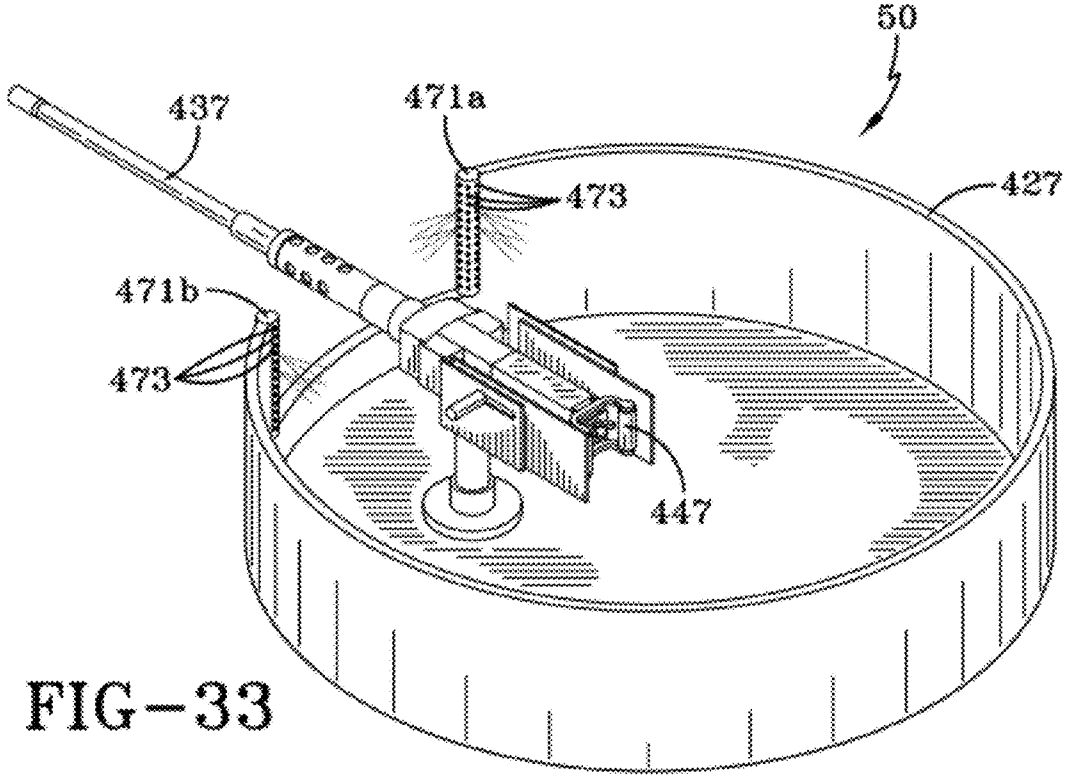

FIG-33

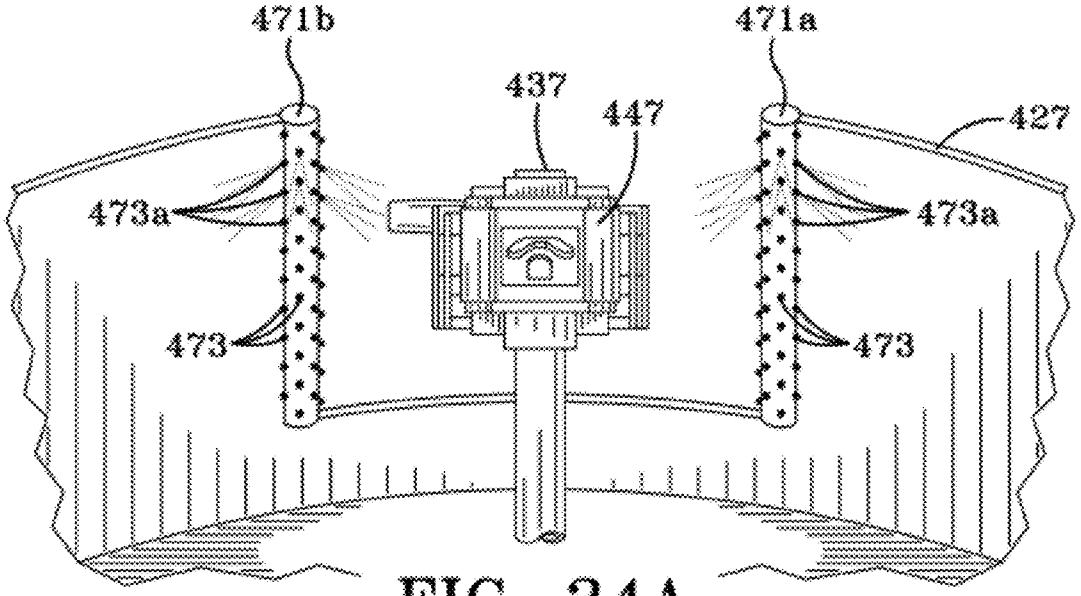

FIG-34A

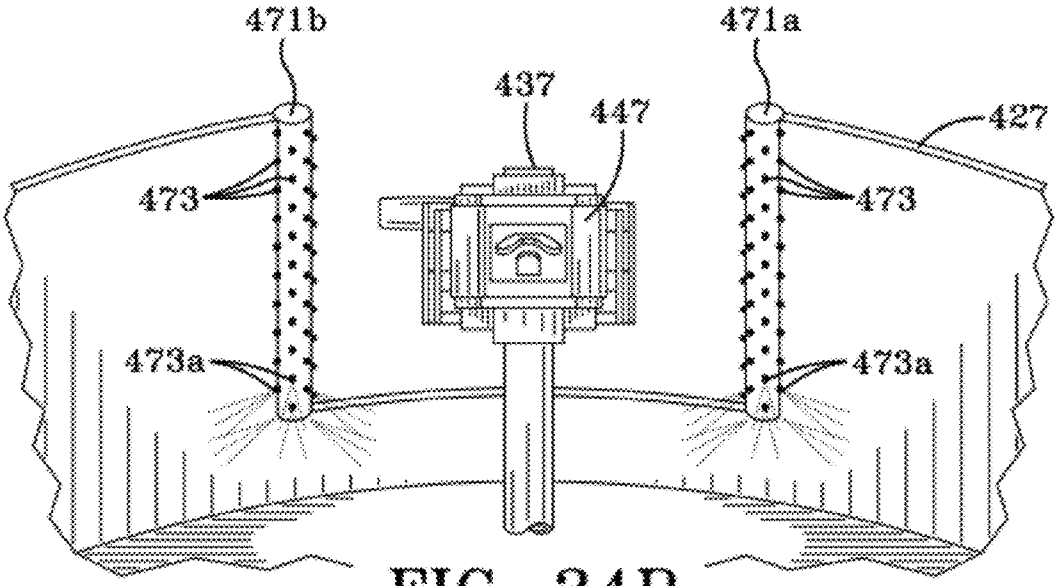

FIG-34B

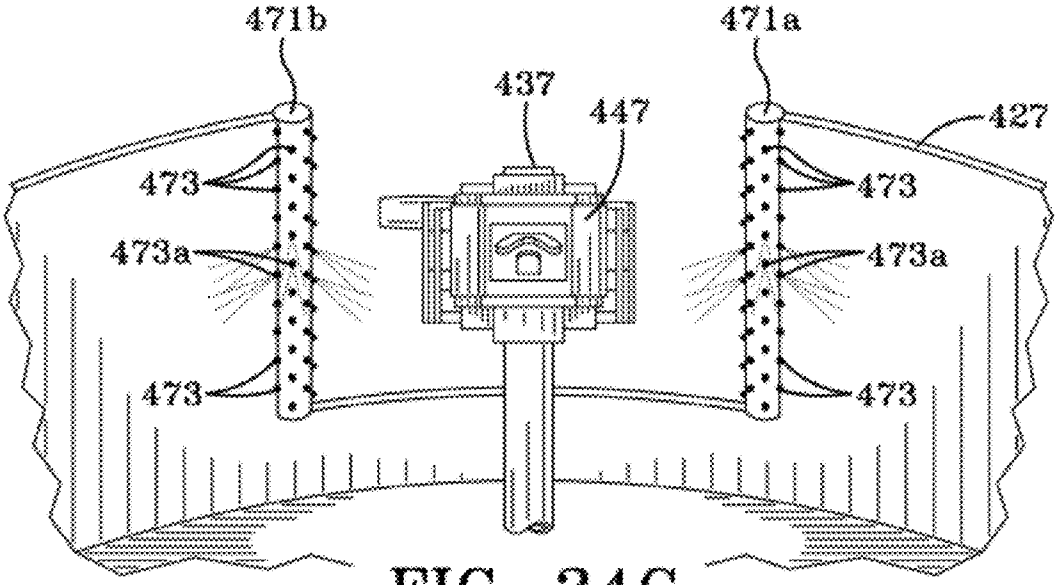

FIG-34C

DAMAGE DETECTION AND REMEDIATION SYSTEM AND METHODS THEREOF

CROSS-REFERENCE TO RELATED APPLICATION

[0001] This application claims priority to U.S. Provisional Patent Application Ser. No. 61/435,255, filed Jan. 21, 2011, the disclosure of which is expressly incorporated by reference herein. The present application is also related to U.S. patent application Ser. No. _____, filed _____, entitled "VEHICLE DAMAGE DETECTION SYSTEM AND METHOD OF MANUFACTURING THE SAME" (Attorney Docket No. 100,648), U.S. patent application Ser. No. _____, filed _____, entitled "EVENT DETECTION SYSTEM HAVING MULTIPLE SENSOR SYSTEMS IN COOPERATION WITH AN IMPACT DETECTION SYSTEM" (Attorney Docket No. 100,649), U.S. patent application Ser. No. _____, filed _____, entitled "EVENT DETECTION SYSTEM USER INTERFACE SYSTEM COUPLED TO MULTIPLE SENSORS INCLUDING AN IMPACT DETECTION SYSTEM M" (Attorney Docket No. 100,650), and U.S. patent application Ser. No. _____, filed _____, entitled "EVENT DETECTION CONTROL SYSTEM FOR OPERATING A REMOTE SENSOR OR PROJECTILE SYSTEM" (Attorney Docket No. 100,651), the disclosures of which are expressly incorporated by reference herein.

STATEMENT REGARDING FEDERALLY SPONSORED RESEARCH OR DEVELOPMENT

[0002] The invention described herein was made in the performance of official duties by employees of the Department of the Navy and may be manufactured, used and licensed by or for the United States Government for any governmental purpose without payment of any royalties thereon.

FIELD OF THE INVENTION

[0003] The present invention relates to a system and apparatus for detecting events of interest, such as damage events associated with impacts, interactions between structures, or structural integrity events for which detection is desired.

BACKGROUND AND SUMMARY OF THE INVENTION

[0004] Current structures such as armor, microelectronics, or critical infrastructure systems lack effective, real-time sensing systems to detect damage events of interest, such as an impact from a ballistic object, a tamper event, a physical impact such as from debris (such as airborne or space debris), or other damage events which may affect structural integrity or cause failure.

[0005] Detection of armor or surface failures may be currently based on aural indications or manual inspection after an event which could be delayed due to ongoing use of equipment or operations. When a critical armor or surface element becomes compromised, lives may be placed at risk. Currently, there is no known way of effectively detecting these failures immediately or as the event happens.

[0006] Security forces, emergency response, or law enforcement personnel often rely on body armor and personal protective equipment. Due to designs of such armor or equipment, users cannot reliably predict where a potential armor or equipment failure is occurring, or if the armor or equipment has been compromised to the point of potential failure.

[0007] Traditionally, medics and emergency response personnel must manually inspect a victim for ballistic wounds that have occurred from damage events, such as bomb blasts or gunfire. They can only perform and make an assessment based on visible injuries, such as a penetration wound.

[0008] Space based systems also lack effective detection systems which meet requirements for space launch, such as liftoff and other constraints. For example, onboard the international space station, astronauts and ground controllers do not know that an outer panel has been compromised unless it has damaged a system or the impact site is leaking gas. Often, manual inspection of the station is required by performing spacewalks or by robotics to find potentially compromised areas.

[0009] An effective impact sensing system could be used to avert potential disasters of units in the space frontier from contact with space junk, and hypervelocity impacts of meteorites and micrometeoroids. A sensing system on the shields or exterior of a spacecraft may determine the shielding materials integrity during liftoff and flight through the earth's atmosphere. For example, if a piece of shielding had been displaced, a sensing system may determine where on the craft the shielding has been removed in the event it may be repaired once docked to the space station. This information may be communicated to the astronauts and the space flight control center to determine the extent of damage and to determine if the craft is a risk to astronaut's lives and/or critical equipment.

[0010] In the aircraft industry, active monitoring during all phases of an aircraft's life span will improve the safety margin of critical components. In the past, aircraft have had fuselage failures because fatigue cracks went undetected during the flight. If the skin of the aircraft is actively monitored, a pilot could be warned about developing problem(s) and mitigation actions could be taken. The information may also be fed into the aircraft's data recorder (i.e., "black box") providing greater detail on the aircraft's condition. This would lead to safer aircraft and extended aircraft lifespans.

[0011] In the commercial vehicle industry, a sensor system on key components of a vehicle may determine the extent of damage while a damage event, such as a collision is happening. This information may be used to deploy specific airbags to those areas of the vehicle being adversely affected or compromised.

[0012] In unmanned aerial vehicles (UAVs), battle field robots, autonomous systems, or any device requiring a circuit board, active monitoring may independently and quickly detect damage and automatically reroute signals, power, and command and control to other redundant systems without having to delay for error detection or other fault sensing techniques. This method may, for example, allow an autonomous robotic device to receive damage such as a bullet hole through a circuit board and automatically shut down the damaged section and reallocate lost functionality to other systems. Sensing systems which are capable of being adapted to design specifications of a microelectronic system may be utilized to improve the survivability of such microelectronic systems. For example, a sensing system which is light weight and easily mounted to an item of interest may provide continuous monitoring and enable a capacity for dynamically reconfiguring a circuit board for internal physical damage that may be caused by events such as physical trauma, shock, vibration or heat.

[0013] Sensing systems may also be used to identify breached containers holding sensitive documents, information, or materials. Such sensing systems should be easily monitored such that mitigation actions may be taken in real time before information/material is unrecoverable. Improvements to existing sensing technology are needed to detect a breach of any type of container for commercial or military use, and relay that breach to a monitoring system.

[0014] According to an illustrative embodiment of the present disclosure, a system is provided to produce real-time information on a variety of damage events, including structural, perimeter, and/or armor integrity failure conditions of a monitored device or unit by means of a resistive/conductive sensor system. One illustrative embodiment of the present disclosure provides sensors to areas where impacts may occur from a ballistic means or other known or unknown sources. Exemplary ballistic strike detection methods and structures may be used to pinpoint a location of an impact site, provide an estimation of the ballistic object's relative velocity, and provide an estimation of the ballistic object's size.

[0015] According to an illustrative embodiment of the present disclosure, a detection system includes a first layer adapted to a damage event, the first layer adapted to conduct an electromagnetic signal and having a plurality of electromagnetic signal measuring portions oriented in a first orientation. At least one coupling point is in electrical communication with at least one of the signal measuring portions of the first layer and is adapted to receive an electromagnetic signal input. An electromagnetic signal generator is coupled to the at least one input coupling point to provide the electromagnetic signal input. At least one output coupling point is in electrical communication with at least one of the signal measuring portions of the first layer and is adapted to provide an electromagnetic signal output. An electromagnetic signal measuring device is coupled to the at least one output coupling point. A processing system is adapted to control the electromagnetic signal generator and the electromagnetic signal measuring device, wherein the processing system is adapted to determine data on the damage event based on changes between the electromagnetic signal input at the at least one input coupling point and the electromagnetic signal output at the at least one output coupling point. The damage event may be further determined from an electromagnetic signal change calculation which is based on a comparison between a first electromagnetic signal measuring portion and a second electromagnetic signal measuring portion. Illustratively, an output device is adapted to produce damage data comprising a at least one of a damage alert, damage location, damage size, damage orientation, time data, and damage event category.

[0016] According to a further illustrative embodiment of the present disclosure, a detection system includes a sensing device configured to be operably coupled to a structure of interest and to sense a damage event. The sensing device includes a first layer, and a plurality of measuring portions supported by the first layer, each of the measuring portions including an input coupling point and an output coupling point and adapted to conduct an electrical signal from the input coupling point to the output coupling point. A measurement system is in electrical communication with the measuring portions of the sensing device, the measurement system configured to provide electrical signal inputs to the input coupling points of the sensing device, and configured to measure electrical signal outputs at the output coupling points of the sensing device. A damage detection processing system is operably coupled to the measurement system, the processing system configured to determine data on the damage event based on changes between the electrical signal inputs at the input coupling points and the electrical signal outputs at the output coupling points, the data including a location of the damage event on the sensing device and a damage event origination axis directed to the point of origin of the damage event. A user interface is operably coupled to the damage detection processing system and is configured to provide a visual display of the damage data including a representation of a damage alert, the damage event location and the damage event origination axis.

[0017] According to another illustrative embodiment of the disclosure, a method of detecting a damage event associated with a structure of interest includes the steps of coupling a first layer to a structure of interest, the first layer including a plurality of measuring portions oriented in a first direction, providing input electrical signals to input coupling points of each of the measuring portions, and measuring output electrical signals from output coupling points of each of the measuring portions. The method further includes the step of determining data on a damage event based on changes between the electrical signal inputs at each of the input coupling points and the electrical signal outputs at each of the output coupling points.

[0018] According to a further illustrative embodiment of the disclosure, a vehicle damage detection system includes a plurality of sensing devices supported by a vehicle and defining a sensing perimeter. Each of the sensing devices includes a layer, and a plurality of measuring portions supported by the layer, each of the measuring portions including an input coupling point and an output coupling point and adapted to conduct an electrical signal from the input coupling point to the output coupling point. A measurement system is in electrical communication with the measuring portions of each of the sensing devices. The measurement system is configured to provide electrical signal inputs to the input coupling points of each of the sensing devices, and is configured to measure electrical signal outputs at the output coupling points of each of the sensing devices. A plurality of couplers secure the plurality of sensing devices to an exterior of the vehicle. A damage detection processing system is operably coupled to the measurement system, and is configured to determine data on a damage event from the sensing devices based on changes between the electrical signal inputs at the input coupling points and the electrical signal outputs at the output coupling points, the data including a location of the damage event on the sensing device and a damage event origination axis directed to the point of origin of the damage event.

[0019] According to another illustrative embodiment of the present disclosure, a method of manufacturing a vehicle damage detection system includes the steps of preparing an outer surface of a vehicle to facilitate coupling thereto, applying a first electrically isolating material to the prepared surface of the vehicle, applying a first electrically conductive layer on the electrically isolative material, installing a plurality of electrical interconnects on the first electrically conductive layer, coupling the plurality of electrical interconnects to a measurement system, and applying an overcoat layer to the conductive layer and electrical interconnects.

[0020] According to yet another illustrative embodiment of the present disclosure, an event detection system includes an impact sensing device including a layer, and a plurality of measuring portions supported by the layer, each of the mea-

suring portions including an input coupling point and an output coupling point and adapted to conduct an electrical signal from the input coupling point to the output coupling point. A measurement system is in electrical communication with the measuring portions of the impact sensing device. The measurement system is configured to provide electrical signal inputs to the input coupling points of the sensing device, and is configured to measure electrical signal outputs at the output coupling points of the sensing device. An acoustic detection system includes a plurality of microphones configured to detect soundwaves generated by an event. The acoustic detection system is configured to process time offsets from the soundwaves at the plurality of microphones for determining the direction of the source of the event. A processor is operably coupled to the measurement system and the acoustic detection system for determining a damage event origination axis directed to the point of origin of the event. The damage event origination axis is determined by the processor based on changes between the electrical signal inputs at the input coupling points and the electrical signal outputs at the output coupling points of the impact sensing device, and time offsets from the soundwaves at the plurality of microphones of the acoustic detection system. Further illustratively, an imaging system including at least one camera configured to detect weapon fire flash events may be operably coupled to the processor.

[0021] According to a further illustrative embodiment of the present disclosure, a method of detecting a damage event associated with a structure of interest includes the steps of providing a sensing device including a plurality of measuring portions, providing input electrical signals to input coupling points of each of the measuring portions, measuring output electrical signals from output coupling points of each of the measuring portions, and determining data on a damage event based on changes between the electrical signal inputs at each of the input coupling points and the electrical signal outputs at each of the output coupling points. The method further includes the steps of detecting soundwaves generated by the source of the damage event, detecting flash events from the source of the damage event, determining a damage event origination axis based on changes between the electrical signal inputs at the input coupling points and the electrical signal outputs at the output coupling points of the impact sensing device, and correlating the damage event origination axis with time offsets from the soundwaves at the plurality of microphones of the acoustic detection system, and the flash events from the imaging system.

[0022] According to a further illustrative embodiment of the present disclosure, an impact detection system includes a sensing device configured to be operably coupled to a structure of interest and to sense impacts. The sensing device includes a layer, and a plurality of measuring portions supported by the layer, each of the measuring portions including an input coupling point and an output coupling point and adapted to conduct an electrical signal from the input coupling point to the output coupling point. A measurement system is in electrical communication with the measuring portions of the sensing device. The measurement system is configured to provide electrical signal inputs to the input coupling points of the sensing device, and is configured to measure electrical signal outputs at the output coupling points of the sensing device. A damage detection processing system is operably coupled to the measurement system. The processing system is configured to determine data on a damage event from the sensed impact based on changes between the electrical signal inputs at the input coupling points and the electrical signal outputs at the output coupling points, the data including a location of the damage event on the sensing device and an damage event origination axis directed to the point of origin of the ballistic impact. A user interface is operably coupled to the damage detection processing system, the user interface including a plurality of visual indicators, the visual indicators including a plurality of light sources arranged in vertically spaced rows, each of the vertically spaced rows including a plurality of horizontally spaced light sources. Further illustratively, a targeting device is operably coupled to the measurement system. The targeting device may include a slewing mechanism configured to adjust elevation and azimuth of a targeting member for alignment with the origination axis.

[0023] According to a further illustrative embodiment of the present disclosure, a method of detecting a damage event associated with a structure of interest includes the steps of providing a sensing device including a plurality of measuring portions, providing input electrical signals to input coupling points of each of the measuring portions, measuring output electrical signals from output coupling points of each of the measuring portions, and determining data on a damage event based on changes between the electrical signal inputs at each of the input coupling points and the electrical signal outputs at each of the output coupling points. The method further includes the step of adjusting a targeting device in response to the data on the damage event.

[0024] Additional features and advantages of the present invention will become apparent to those skilled in the art upon consideration of the following detailed description of the illustrative embodiment exemplifying the best mode of carrying out the invention as presently perceived.

BRIEF DESCRIPTION OF THE DRAWINGS

[0025] The detailed description of the drawings particularly refers to the accompanying figures in which:

[0026] FIG. **1** is a block diagram of an illustrative damage detection and remediation system of the present disclosure, showing various representative input and output connections thereto;

[0027] FIG. **2** is a diagrammatic view of an illustrative sensing device coupled to a structure of interest for determining a point of origin of an object impacting the sensing device;

[0028] FIG. **3** is an exemplary exploded view of a multi-axis sensing device having layered structures that, when assembled, form a sensor system which permits impact detection and determination of a path of an impact object;

[0029] FIG. **4**A is a diagrammatic side view of an illustrative layered sensing device showing a vector of a projectile impacting the sensing device;

[0030] FIG. **4**B is a diagrammatic top view of the illustrative layered sensing device of FIG. **4**A;

[0031] FIG. **5** is an exemplary plan view of a single-axis sensing device having a single layer with multiple sensing structures applied to a base surface;

[0032] FIGS. **6**A and **6**B are exemplary plan views of alternative embodiments of single-axis sensing devices, each having a single layer with multiple sensing structures for redundant sensing applied to a base surface;

[0033] FIG. **6**C is an exemplary plan view of an alternative embodiment single-axis sensing device with multiple electri-

cal detection loops oriented at an angle with respect to a designated plane which provides an ability to detect smaller objects more precisely;

[0034] FIG. **7** is an exemplary diagrammatic view of an electromagnetic radiating structure with a electromagnetic wave propagating through free space from the radiating structure;

[0035] FIG. **8** is an exemplary plan view embodiment of an alternative sensing device with an array of embedded resistance elements having different electrical resistance values across the array contained in one or more planes of the sensing device prior to an impact;

[0036] FIG. **9** is a plan view similar to FIG. **8**, showing the sensing device during or after an impact;

[0037] FIG. **10** is an exemplary plan view of an alternative embodiment sensing device having with conductive layer and a series of electrical contacts on each side of the conductive layer;

[0038] FIG. **11** is an exemplary plan view of an alternative embodiment sensing device having a conductive layer with a gradient of resistance or electromagnetic properties across the layer and a series of electrical contacts on opposing sides of the conductive layer;

[0039] FIG. **12** is an exemplary detailed plan view of the sensing device of FIG. **11** showing a conductance layer shown before an impact;

[0040] FIG. **13** is an exemplary detailed plan view of the sensing device of FIG. **11** showing a conductance layer shown during or after an impact;

[0041] FIG. **14** is an exemplary side elevational view showing a first method of manufacture step for surface preparation needed to ensure a required adhesion of subsequent layers associated with installation of an exemplary sensing device such as shown in FIG. **11** installed onto a facing of an equipment item where detection is desired;

[0042] FIG. **15** is an exemplary side elevational view showing a second method of manufacture step for applying an electrically insulating material associated with installation of an exemplary sensing structure such as shown in FIG. **11** installed onto a facing of an equipment item where detection is desired;

[0043] FIG. **16** is an exemplary side elevational view showing a third method of manufacture step for applying an exemplary conductance layer associated with a sensing structure such as shown in FIG. **11** installed onto a facing of an equipment item where detection is desired;

[0044] FIG. **17** is an exemplary side elevational view showing a fourth method of manufacture step for applying electrical interconnects to the conductance layer associated with a sensing structure such as shown in FIG. **11** installed onto a facing of an equipment item where detection is desired;

[0045] FIG. **18** is an exemplary side elevational view showing a fifth method of manufacture step for applying a layer which will provide protection and concealment of the structures previously provided associated with a sensing structure such as shown in FIG. **11** installed onto a facing of an equipment item where detection is desired;

[0046] FIG. **19** is a detailed block diagram of a portion of the damage detection and remediation system of FIG. **1**, showing an illustrative sensor data acquisition and processing system coupled to a sensing structure in accordance with an illustrative embodiment of the disclosure;

[0047] FIG. **20** is a detailed schematic diagram of a portion of the illustrative sensor data acquisition and processing system of FIG. **19**;

[0048] FIG. **21** is a block diagram of an exemplary system including a plurality of sensing devices and processing systems operably coupled to a main computer through an electrical bus;

[0049] FIG. **22** is a flow chart of an exemplary method of operation in accordance with an illustrative embodiment of the disclosure;

[0050] FIG. **23** is a flow chart of a further exemplary method of operation in accordance with an illustrative embodiment of the disclosure;

[0051] FIG. **24** is a flow chart of a further exemplary method of operation in accordance with an illustrative embodiment of the disclosure;

[0052] FIG. **25** is a flow chart of a further exemplary method of operation in accordance with an illustrative embodiment of the disclosure;

[0053] FIG. **26** is a flow chart of a further exemplary method of operation in accordance with an illustrative embodiment of the disclosure;

[0054] FIG. **27** is a side elevational view of an illustrative sensing device of the present disclosure used in connection with a vehicle and in cooperation with acoustical and image systems;

[0055] FIG. **28** is a top plan view of the vehicle of FIG. **27**, with portions of the vehicle protective structure and user interface system removed for clarity;

[0056] FIG. **29** is a partial top plan view of the vehicle of FIG. **27**, showing an illustrative user interface system;

[0057] FIG. **30** is a top perspective view of the illustrative user interface system of FIG. **29**;

[0058] FIG. **31** is a front perspective view of a heads-up display of the user interface system of FIG. **30**;

[0059] FIG. **32** is a front elevational view of the user interface system of FIG. **30**;

[0060] FIG. **33** is a top perspective view of a further illustrative user interface system;

[0061] FIG. **34**A is a front perspective view of the user interface system of FIG. **33**, showing light sources illuminated to indicate the origin of an impact object above the current weapon elevation;

[0062] FIG. **34**B is a front perspective view similar to FIG. **34**A, showing light sources illuminated to indicate the origin of the impact object below the current weapon elevation; and

[0063] FIG. **34**C is a front perspective view similar to FIGS. **34**A and **34**B, showing light sources illuminated to indicate the origin of the impact object aligned with the current weapon elevation.

DETAILED DESCRIPTION OF THE DRAWINGS

[0064] The embodiments of the disclosure described herein are not intended to be exhaustive or to limit the disclosure to precise forms disclosed. Rather, the embodiments selected for description have been chosen to enable one skilled in the art to practice the disclosure.

[0065] An illustrative system in accordance with the present disclosure provides real-time information on a variety of damage events, including structural, perimeter, and/or armor integrity/failure conditions of a monitored device or unit by means of a electromagnetic (e.g., electrically resistive/conductive) sensor system. Damage events may include any event or activity that may affect structural integrity or

cause failure. More particularly, it should be noted that damage events as described herein may be caused by a variety of sources including, but not limited to, impacts (e.g., ballistics, collisions, etc.), tamper or breaching activities (e.g., drilling, sawing, cutting, etc.), and structural/environmental induced damage (e.g., stress, fatigue, corrosion, etc.).

[0066] An exemplary embodiment of the disclosure includes sensing devices supported by areas of a structure of interest where impacts may occur from known or unknown sources, including from ballistic means. An exemplary impact detection and remediation system and method described herein may be used to pinpoint the location of an impact event, estimate the ballistic object's relative velocity, and estimate the ballistic object's size.

[0067] With reference initially to FIGS. **1** and **2**, a damage detection and remediation system **10** according to an illustrative embodiment of the present disclosure includes a sensor data acquisition and processing system **12** having a sensing structure or device **14** operably coupled to a monitored unit or structure of interest **16**. As further detailed herein, the structure of interest **16** may include personal protective equipment, armor, vehicles, microelectronics, spacecraft, aircraft, or any other structure, device or unit where impact or damage detection is desired. The system **12** is configured to determine damage condition information, including the location of a damage or impact event **13** on the structure of interest **16** relative to a coordinate system origin **18** (0,0,0 on an x,y,z coordinate system). The system **10** may also be configured to determine the initiation or origin point **17** of an impact object or ballistic **19** and hence, an axis of origin (origination axis) **21** extending from the origin point **17** to the damage event **13**. As further detailed herein, the system **10** may also characterize the impact object, for example, by determining the size of the damage event **13** and depth of penetration of the damage event **13**.

[0068] The sensing device **14** is in electrical communication with a measurement system **20** which, in turn, is in electrical communication with a damage detection processing system **30**. As further detailed herein, a main computer or processor **40** may be operably coupled to the data acquisition and processing system **12** for processing information from the damage detection processing system **30**. An electrical bus **42** (FIG. **1**) may interconnect a plurality of different data acquisition and processing systems **12** to each other and the main computer **40**.

[0069] A user interface (UI) **50** may be in electrical communication with the damage detection processing system **30** and/or the main computer **40**. The user interface **50** may form part of each data acquisition and processing system **12** or may be a separate component operably coupled to a plurality of systems **12**. Additional input devices **60**, such as image and/or acoustic sensing systems, as further detailed herein, may also provide input signals to the damage detection processing system **30** and/or main computer **40**. A transceiver **70** may be operably coupled with the main computer **40** and provide wireless communication with external communication systems, such as a global control and command system (GCCS) **72**. As further detailed herein, output devices **90** are illustratively in communication with the main computer **40** and may receive processed data (e.g., impact event location, ballistics' relative velocity and size, point of origin, etc.) and provide a desired response thereto.

[0070] Note that in connection with the following description, some drawings have dashed lines detailing elements of a structure which are not shown due to a cut-away or detailing a portion of a multi-layered design underneath a structure, such as in FIGS. **5**, **6**A, **6**B, **6**C, **8**, **10**, and **11**. These dashed figure sections indicate the structure that would be present had the cut-away not been made in the drawing in question. These dashed structures are not present in the layer which has been exposed by the cut-away depiction in the drawing.

[0071] Referring now to FIG. **3**, an exemplary sensing structure or device **14** in accordance with the disclosure is provided having multiple sensor layer assemblies **15***a*, **15***b*, **15***c*, each having a nonconductive substrate or layer **3**, electrically conductive wires or traces **5** applied to the non-conductive layers **3**, electrical contacts **7** adapted to be coupled to a first or output connection of measurement system **20**, illustratively an electrical source **6** (hereinafter first electrical contacts **7**), and electrical contacts **9** adapted to be coupled to a second or input connection of measurement system **20**, illustratively a ground **8** (hereinafter second electrical contacts **9**). Moreover, the first and second electrical contacts **7** and **9** are configured to electrically couple with any appropriate measuring device **20** such that the device **20** measures electrical characteristics therebetween (e.g., impedance, voltage, resistance, etc.).

[0072] Illustratively, the first electrical contacts **7** and the second electrical contacts **9** are coupled to opposing ends or termination points of each of the conductive wires or traces **5** for conducting electromagnetic (e.g., electrical) signals through traces **5** from first contacts **7** to respective second contacts **9**. The FIG. **3** embodiment sensing device **14** shows a number of the wires or traces **5** evenly spaced apart, each running in parallel across the front face of each of the non-conductive layers **3**. As further detailed herein, spacing between adjacent traces **5** defines system resolution by determining the number of impact data points.

[0073] The wires or traces **5** are illustratively read or monitored by the measurement system **20** checking each respective conductive path for an open, resistive change, or by transmitting an electromagnetic (e.g., electrical) signal pulse down the conductive path and measuring the time it takes to return or bounce back.

[0074] In one illustrative embodiment, the measurement system **20** includes an electromagnetic, illustratively electrical, signal generator **27** operably coupled to the electrical source **6** for providing a signal input to each of the first electrical contacts **7**. The measurement system **20** also includes an electromagnetic, illustratively electrical, signal measuring device **29** operably coupled to the ground **8** for measuring signal outputs from each of the second electrical contacts **9**.

[0075] In an illustrative embodiment, the measurement system **20** may comprise a time domain reflectometer (TDR) which is known for characterizing and locating faults in metal wires or cables. Illustratively, the TDR includes signal generator **27** in the form of an electrical pulse generator coupled to first electrical contacts **7** for transmitting a short time rise signal pulse along the traces **5**. Assuming that each trace **5** is of uniform impedance and properly terminated, the entire transmitted pulse will be absorbed at second contacts **9** and no signal will be reflected back to the TDR. However, impedance discontinuities will cause some of the signal pulse from the signal generator **27** to be sent back towards the TDR. More particularly, increases in impedance will create a reflection that reinforces the original pulse signal, while decreases in impedance will cause a reflection that opposes the original

pulse signal. The resulting reflected pulse signal is measured by signal measuring device **29** of the TDR, illustratively an oscilloscope that plots the reflected pulse signal as a function of time. Since the speed of signal transmission is relatively constant for conductive traces **5**, the reflected pulse signal may be interpreted as a function of length to the damage **13**.

[0076] As the different layer assemblies **15***a*, **15***b*, **15***c* (corresponding respectively to X, Y & U planes, where U represents a plane that is at an angle to X & Y planes) are penetrated by a ballistic object, the conductive wires or traces **5** at a damaged portion are cut or degraded, thereby identifying a location relative to a structure of interest. This damaged portion of the layers **15***a*, **15***b*, **15***c* also provides information on the size (i.e. surface area) and the depth of the damage.

[0077] With further reference to FIG. **3**, an illustrative first sensor layer assembly **15***a* for a first sensor detection axis (e.g., "x axis") is provided with a number of electrically conductive wires or traces **5** running across the non-conductive layer **3** and spaced apart from each other in a perpendicular direction (e.g., "y axis"). Each of the conductive wires or traces **5** is illustratively embedded in the non-conductive layer **3**. A decrease in spacing between adjacent conductive wires or traces **5** improves a given exemplary sensing structure's ability to sense size and impact location of an impact event (i.e., resolution) by providing a greater number of impact data points to the measurement system **20**.

[0078] Embodiments of the sensing device **14** disclosure may be manufactured with a variety of materials. For example, the non-conductive layer **3** may be made from epoxy, thermoplastic, thermal set plastic, ceramic, paper, silicon, polymers, or other electrically non-conductive material suitable to having electrically conductive pathways coupled to the non-electrically conductive material. An electrically non-conductive material may also be applied using a spray or painting apparatus which applies the non-electrically conductive material onto a structure of interest then have the electrically conductive pathways applied onto a layer of the non-electrically conductive material. In one illustrative embodiment, the non-conductive layer **3** may be formed of an electrically isolative material, such as MYLAR®, fiberglass, KAPTON®. The conductive traces **5** may be formed of an electrically conductive material, such as copper or aluminum, which may be applied using conventional circuit trace processes, such as direct depositing, vapor depositing, etching, painting, flame spraying, laminating, or gluing the conductive material onto the isolative substrate or layer **3**.

[0079] A second sensor layer assembly **15***b* for a second sensor detection axis (e.g., "y axis") is provided in the illustrative embodiment. The second sensor layer assembly **15***b* is similar to the first sensor layer assembly **15***a* except that the wires or traces **5** of the second sensor layer assembly **15***b* are oriented in a different direction than the wires or traces **5** in the first layer assembly **15***a* (e.g., angularly offset within a common plane). In this example, the wires or traces **5** in the second sensor layer assembly **15***b* are oriented to run approximately perpendicular to the wires or traces **5** in the first sensor layer assembly **15***a*.

[0080] A third sensor layer assembly **15***c* for a third sensor detection axis (e.g., "u axis") is provided in the illustrative embodiment. The third sensor layer assembly **15***c* is similar to the first and second sensor layer assemblies **15***a*, **15***b*, except that the wires or traces **5** that are of the third sensor layer assembly **15***c* are oriented in a different orientation than the first or second sensor layer assemblies **15***a*, **15***b* (e.g., angularly offset within a common plane). In this example, the wires or traces **5** of the third sensor layer assembly **15***c* are oriented at an approximate 45 degree angle relative to the wires or traces **5** in the first and second sensor layer assemblies **15***a*, **15***b*.

[0081] Referring further to FIG. **3**, a rear face of the second sensor layer assembly **15***b* is coupled to a front face of the third sensor layer assembly **15***c*, illustratively through an adhesive. Similarly, a rear face of the first sensor layer assembly **15***a* is coupled to a front face of the second sensor layer assembly **15***b*, illustratively through an adhesive. In certain illustrative embodiments, the layer assemblies **15***a*, **15***b*, **15***c* may be coupled together through other conventional means, such as fasteners, heat staking, or lamination.

[0082] The embodiment sensing device **14** of FIG. **3** operates by coupling the electrical source **6** to the first electrical contacts **7**, and ground **8** to the second electrical contacts **9**. When a damage or impact event occurs (e.g., a ballistic object impact), resistance changes between the first electrical contacts **7** and the second electrical contacts **9** when the wires or traces **5** are either severed or deformed at the damaged portion.

[0083] Measurement system **20** is illustratively coupled to the electrical source **6** and ground **8** which determines changes in electrical properties of the wires or traces **5**. More particularly, the signal generator **27** of the measurement system **20** electrically couples the first electrical contacts **7** to the electrical source **6**, and the signal measuring device **29** of the measurement system **20** electrically couples the second electrical contacts **9** to ground **8**. The measurement system **20** will then send measurements to impact or damage detection processing system **30** which then determines damage data (e.g., the location, size, time, and/or category of a damage event **13** on the structure of interest **16** to which the sensing device **14** has been coupled).

[0084] The impact detection processing system **30** may use the relative position of each impact event location associated with each sensor layer assembly **15***a*, **15***b*, **15***c* to determine the impact location **13** for the object **19** which created the impact event. This information may then be used to identify the point of origin **17** for the object **19** associated with the impact event. The point of origin **17** information may then be used to take further actions such as orienting output devices **90** (e.g., further sensors or equipment) on the axis of origin **21** to further respond, if necessary, to potential additional impact events.

[0085] The damage data from the processing system **30** may then be provided to a user interface **50**. More particularly, the user interface **50** may include an output device to produce damage data including a visual representation of a damage alert, damage event **13** location, and a damage event origination axis **21**. In certain illustrative embodiments, the user interface **50** may include a graphical display for plotting the damage event **13** location on a diagram or map associated with the structure of interest **16**. In certain illustrative embodiments, the user interface **50** may provide an audible event warning and/or a tactile event warning indicating the location of the damage event **13**. The user interface **50** may also include a communication device, such as a wireless transceiver, that transmits a damage event notification signal depicting an orientation of the damage event **13**.

[0086] The axis of origin **21** information may also be used to determine or assess damage which could have been caused by the impact or penetration associated with the damage event

13 and impact object **19**. An embodiment of the system **10** may also be used to characterize the impact object **19** and potentially the source **17** of the impact object **19** based on axis of origin **21**, size of damage **13** detected by the sensor layer assemblies **15***a*, **15***b*, **15***c*, and depth of penetration of damage **13** within the sensor layer assemblies **15***a*, **15***b*, **15***c*, to further characterize threat or other information associated with the impact object **19** or event. The user interface **50**, such as a display monitor or other graphical user interface device, then permits a user to view and interpret the plot of damage, axis of origin **21** for the impact object **19**, and potential area of interest for a point of origin **17** of the impact object **19**, and take appropriate action.

[0087] FIGS. **4**A and **4**B are diagrammatic views showing how a vector **22** for a projectile **19** impacting sensing device **14** may be determined by system **10**. A table of damage profile data associated with impact damage **13***a*, **13***b*, **13***c* (FIG. **4**A) at layer assemblies **15***a*, **15***b*, **15***c* from specific sources may be created by system **12** and stored in memory **31**. The processing system **30** may correlate the detected damage **13** with expected damage characteristics from known sources stored in the damage profile data table. For example, damage profile data may represent known damage profiles from common sources, such as AK47 rounds, anti-tank rounds, and IED damage patterns so the system will not produce false vector information from anything except rifle or gun rounds. IED or armor piercing blast damage would likely cause so much damage that the damage pattern could not be interpolated to produce an accurate vector **22** calculation for the point of origin **17**. Additional illustrative stored damage profiles may be from a small arms (e.g., 3 mm to 8 mm projectiles) category, an explosively formed penetrator category, a high energy ballistic impact category (e.g., micro meteoroids or space debris), a structural fatigue category, a heat event category, and a large caliber (e.g., .50 or larger caliber) projectile category.

[0088] Referring to FIG. **5**, a further illustrative embodiment sensing device **24** is shown as including a sensor layer assembly **26** having elongated loops of wires or traces **25**, **27**, **29**, **31**, **33**, and **35** running across a nonconductive layer **23** with first (e.g., source) and second (e.g., ground) electrical contacts **7** and **9**, respectively, coupled to each respective end of the elongated loops of wire or traces **25**, **27**, **29**, **31**, **33**, and **35**. In the illustrative embodiment, the first and second electrical contacts **7** and **9** are formed on one side of the sensor layer assembly **21** and are coupled to opposing ends of each elongated loop **25**, **27**, **29**, **31**, **33**, and **35**. The non-conductive layer or substrate **23** is illustratively formed of an electrically isolative material (e.g., MYLAR®, fiberglass, KAPTON®, or epoxy), while the loops of wires or traces **25**, **27**, **29**, **31**, **33**, and **35** are illustratively formed of an electrically conductive material (e.g., copper or aluminum). A base material or substrate **22** is illustratively placed underneath the non-conductive layer **23**. However, it should be noted that the base material **22** could also be the structure of interest **16** that is being monitored for an impact event which the non-conductive layer **23** is placed upon versus another layer of material. The elongated loops of wire or traces **25**, **27**, **29**, **31**, **33**, and **35** are placed such that they are parallel with each other and are approximately evenly spaced apart across the non-conductive material **23**.

[0089] The loops of wire or traces **25**, **27**, **29**, **31**, **33**, and **35** are illustratively read or monitored by the measurement system **20** checking each respective conductive path for an open, resistive change, or by transmitting an electromagnetic (e.g., electrical) signal pulse down the conductive path and measuring the time it takes to return or bounce back. In certain illustrative embodiments, the sensing device **24** of FIG. **5** may be operably coupled to a time domain reflectometer (TDR) for operation similar to sensing device **14** of FIG. **3**, but for having the electrical contacts **7** and **9** all located along one side of the non-conductive layer **23**.

[0090] Referring to FIGS. **6**A and **6**B, further illustrative sensing devices **41** and **71** are shown. Sensing device **41** is shown as including two nested sensor loops **47**, **69**, while sensing device **71** is shown as including six nested sensor loops **77**, **78**, **80**, **82**, **84**, **86**. The nested and multiple sensor loops provide enhanced capability to impact position detection system **10** by increasing its ability to detect smaller damage areas and impact objects **19** impinging on a structure of interest **16** as well as location of impact **13**. The operation of the first embodiment sensing device **41** and second embodiment sensing device **71** in FIGS. **6**A and **6**B, respectively, are both substantially identical with the exception than the second embodiment sensing device **71** of FIG. **6**B has a greater ability to sense smaller objects within a smaller area than the first embodiment sensing device **41** of FIG. **6**A.

[0091] The illustrative sensing device **41** shown in FIG. **6**A includes a non-conductive material layer or substrate **45** placed on a base material or substrate **43**, with a first sensor loop **47** and a second sensor loop **69** formed on the electrically isolating or non-conductive layer **45**. Again, the base material **43** may be the structure of interest **16** that is being monitored for an impact event and upon which the non-conductive layer **45** is directly placed versus an intermediate layer of material. Both the first sensor loop **47** and the second sensor loop **69** are illustratively formed of an electrically conductive material (e.g., copper or aluminum).

[0092] The first sensor loop **47** of sensing device **41** illustratively has a first end on an upper right hand side of the non-conductive material **45**. The first sensor loop **47** extends in a continuous elongated serpentine path, or manner similar to an elongated sine wave form, with lengths of each lateral loop segment being longer than a vertical length forming bend segments from top to bottom of the non-conductive material **45** with even spacing. However, it should be noted that the sensing device **41** may include any sensor loop or structure form which adequately covers a structure of interest **16** to provide a sensing capacity distributed over the structure of interest **16** as desired. The sensor loop **47** in sensing device **41** has a terminating or second end on a lower right hand side of the non-conductive material **45** of FIG. **6**A. A first end electrical contact **49** is formed in electrical contact with the first end of the sensor loop **47** at the upper right hand corner of the sensing device **41**. A second end electrical contact **55** is formed in electrical contact with the second end of the sensor loop **47** proximate the lower right hand corner of the sensing device **41**. A number of intermediate electrical contacts **67**, **63**, and **61**, are coupled to bend points intermediate end contacts **49** and **55** in the elongated serpentine path of sensor loop **47** in sensing device **41**.

[0093] The second sensor loop **69** of the sensing device **41** of FIG. **6**A is illustratively formed similar to the first sensor loop **47** in an elongated serpentine form which is nested to follow the contours or shape of the first sensor loop **47**. The sensor loop **69** has an initiating or first end on a lower left hand portion of the sensing device **41**, and has a terminating or second end at an upper left section of the sensing device **41** of

FIG. **6**A. A first end electrical contact **59** is formed in electrical contact with the first end of the sensor loop **69** at the lower left hand section of the sensing device **41**. A second end electrical contact **65** is formed in electrical contact with the second end of the sensor loop **69** proximate the lower right hand corner of the sensing device **41**. A number of intermediate electrical contacts **57**, **53**, and **51** are coupled to bend points intermediate end contacts **59** and **65** in the elongated serpentine path of the second sensor loop **69** in sensing device **41**.

[0094] The sensor loops **47** and **69** are illustratively read or monitored by the measurement system **20** checking each respective conductive path for an open, resistive change, or by transmitting a pulse down the conductive path and measuring the time it takes to return or bounce back. As further detailed herein, any suitable measurement device may be coupled across first end electrical contacts **49** and **59** and electrical contacts **55**, **67**, **63**, **61**, and **65**, **57**, **53**, **51** to measure electrical attributes of the sensor loops **47** and **69**, respectively. In certain illustrative embodiments, the measurement system may comprise a time domain reflectometer (TDR). As such, the sensing device **41** of FIG. **6**A may operate in a similar manner as the sensing device **24** of FIG. **5**.

[0095] The illustrative sensing device **71** of FIG. **6**B shows a non-conductive layer or substrate **75** placed on a base material or substrate **73** with first, second, and third sensor loops **77**, **78**, **80** formed in elongated U shaped forms having an initiating or first end at a right hand side and a terminating or second end on the right hand side with the bend being on an opposing side, such that the opening defined by the U shape of each loop **77**, **78**, **80** is formed on the right hand side. The non-conductive layer **75** is illustratively formed of an electrically isolative material (e.g., MYLAR®, fiberglass, KAPTON®, or epoxy), while the loops **77**, **78**, **80** are illustratively formed of an electrically conductive material (e.g., copper or aluminum). The first, second, and third sensor loops **77**, **78**, **80** are illustratively evenly spaced apart, with the first sensor loop **77** being formed in an upper section, the second sensor loop **78** being formed in a center section, and the third sensor loop **80** being formed in a lower section of the sensing device **71**. First electrical contacts **79**, **83**, **87** are respectively formed in electrical contact with a beginning or an upper side of the U-shaped first, second, and third sensor loops **77**, **78**, **80** on the right side of the sensing device **71** in FIG. **6**B. Second electrical contacts **81**, **85**, **89** are formed in electrical contact with a respective opposing end of the first, second, and third sensor loops **77**, **78**, **80** having first electrical contacts **79**, **83**, **87**, and are likewise positioned on the right side of the sensing device **71** in FIG. **6**B.

[0096] FIG. **6**B shows the illustrative sensing device **71** as including fourth, fifth and, sixth sensor loops **86**, **84**, **82** formed in elongated U shaped forms starting from a left hand side and ending on the left hand side. The bend in the U shaped form of each loop **86**, **84**, **82** is formed on an opposing side from the end points of each U shaped loop **86**, **84**, **82** such that the opening of the U shape is formed on the left hand side of the sensing device **71** in FIG. **6**B. The fourth, fifth, and sixth sensor loops **86**, **84**, **82** are formed evenly spaced apart, with the fourth sensor loop **86** being formed in an upper section, the fifth sensor loop **84** being formed in a center section, and the sixth sensor loop **82** being formed in a lower section of the sensing device **71**. First electrical contacts **103**, **99**, **95** are respectively formed in electrical contact with a beginning point or an upper side of the U-shaped fourth, fifth, and sixth third sensor loops **86**, **84**, **82** on the left hand side of the sensing device **71** in FIG. **6**B. Second electrical contacts **101**, **97**, **91** are formed in electrical contact with a respective opposing end of the fourth, fifth, and sixth sensor loops **86**, **84**, **82** having first electrical contacts **103**, **99**, **95**.

[0097] The first, second, and third sensor loops **77**, **78**, **80** of the illustrative sensing device **71** of FIG. **6**B are offset and nested within the fourth, fifth, and sixth sensor loops **86**, **84**, **82**. End points of sensor loops which terminate within a nested portion of another sensor loop (e.g., first sensor loop **77** which terminates inside of fourth sensor loop **86**, and sixth sensor loop **82** which terminates inside third sensor loop **80**), are electrically coupled with a corresponding electrical contact using a buried trace within the non-conductive material **73** (e.g., first electrical contact **81** is electrically coupled with the end of the first sensor loop **77**, and second electrical contact **95** is electrically coupled with the end of the sixth sensor loop **82**).

[0098] The sensor loops **77**, **78**, **80** are illustratively read or monitored by the measurement system **20** checking each respective conductive path for an open, resistive change, or by transmitting a pulse down the conductive path and measuring the time it takes to return or bounce back. Again, in certain illustrative embodiments, the measurement system **20** may comprise a time domain reflectometer (TDR). As such, the sensing device **71** of FIG. **6**B may operate in a similar manner as the sensing device **41** of FIG. **6**A.

[0099] More particularly, the method of operation and processing systems for use with the illustrative sensing devices **41** and **71** of FIGS. **6**A and **6**B may be similar to those detailed above in connection with sensing device **14** of FIG. **3**. The single-axis device embodiments of FIGS. **6**A and **6**B may be primarily focused on identifying a location of a damage event **13**, versus the multi-axis embodiment of FIG. **3** which is also configured to determine a point of origin **17** of an object **19** causing a damage event **13** (FIG. **2**). However, it should be appreciated that layering sensing devices **41** and **71** (alone or with additional devices) would create a multi-axis sensing device having sensing features similar to sensing device **14** of FIG. **3**.

[0100] FIG. **6**C shows an exemplary alternative impact sensing device **119** of a single axis sensing structure with multiple electrical detection loops **123**, **125** formed onto a non-conductive material substrate or layer **120** oriented with an angle with respect to a designated plane. The impact sensing device **119** provides an ability to detect smaller impact objects more precisely. In particular, the sensing device **119** of FIG. **6**C shows first and second sensor loops **123**, **125** which are coupled with the non-conductive material **120**. Again, the non-conductive layer **120** is illustratively formed of an electrically isolative material (e.g., MYLAR®, fiberglass, KAPTON®, or epoxy), while the loops **123**, **125** are illustratively formed of an electrically conductive material (e.g., copper or aluminum). The first and second sensor loops **123**, **125** are formed in an elongated serpentine path with lateral segments and bend segments which couple to the lateral segments in a U shaped form. The lateral segments are longer than the bend segments. The lateral segments are formed with an orientation which is approximately 45 degrees from a designated plane of interest such a ground plane which is parallel to a terrestrial horizon. The first and second sensor loops **123**, **125** are offset and nested within each other's loops **125**, **123**, with the first sensor loop **123**

starting at a top left hand section of the impact sensing device **119** in FIG. **6**C and ending in a lower right hand section of the impact sensing device **119**.

[0101] With further reference to FIG. **6**C, a first end electrical contact **143** is illustratively formed on the upper left hand portion of the impact sensing device **119** and is coupled to the first sensor loop **123**. First end electrical contact **127** is formed on the upper left hand portion of the impact sensing device **119** and is coupled to the second sensor loop **125**. Intermediate electrical contacts **141**, **139**, **137** are formed on each bend segment of the first sensor loop **123**, and a second end electrical contact **133** is formed at an end section of the first sensor loop **123** on the lower right hand section of the sensing device **119**. Intermediate electrical contacts **128**, **129**, **131** are formed on each bend segment of the second sensor loop **125** and an second end electrical contact **135** is formed at an end section of the second sensor loop **125** on the lower right hand section of the sensing device **119**. In this embodiment, each electrical contact **141**, **139**, **137**, **133**, **128**, **129**, **131**, **135** is separate from respective first end electrical contacts **143**, **127** to permit measuring of discrete electrical attributes therebetween, such as resistance values.

[0102] Again, in certain illustrative embodiments, the measurement system **20** coupled to sensing device **119** may comprise a time domain reflectometer (TDR). As such, the sensing device **119** of FIG. **6**C may operate in a similar manner as the sensing device **41** of FIG. **6**A. Further, sensing devices **41**, **71**, and **119** (alone or with additional devices) may be layered to create a multi-axis sensing device having sensing features similar to sensing device **14** of FIG. **3**. For example, sensing device **41** may form a top layer, sensing device **71** may form an intermediate layer, and sensing device **119** may form a bottom layer.

[0103] FIG. **7** shows an exemplary model of a further sensing system, illustratively including an electromagnetic radiating structure **111** (e.g., an antenna) with an electromagnetic wave **113** propagating through free space from the radiating structure **111**. The electromagnetic wave **113** in this example is perpendicular to a ground plane **115**. An impact object **19** traversing the electromagnetic wave **113** will distort the electromagnetic wave **113** as it passes through the electromagnetic wave **113** field. This distortion may be detected and plotted using damage detection processing system **30** which permits detection of an impact object **19** prior to impact. This system may be adapted to detect background radiation or electromagnetic sources and then emit a field which is out of phase with the background radiation or electromagnetic sources which then cancels one or more background radiation or electromagnetic signals so as not to avoid emitting an interference field or create an undesirable detectable signal.

[0104] In certain illustrative embodiments, radiating structure **111** may comprise a proximity sensor similar to a Theremin. The Theremin may include a plurality of spaced apart antennas supported by a base plate defining a ground plane. An illustrative Theremin is the Model No. 302 Theremin available from Harrison Instruments of Silver Spring, Md. Illustratively, at least three antennas are provided in order to facilitate triangulation of an object (such as a ballistic) positioned in proximity to the Theremin. While the antennas may be of any suitable shape and size, in certain illustrative embodiments the antennas are configured to extend parallel to, and are illustratively recessed within, the base plate defining the ground plane. In operation, the plurality of antennas are configure to detect the presence, location, and velocity of an object by detecting changes in the electromagnetic waves detected by the antennas within the medium (e.g., air) above the ground plane. The antennas are also configured to detect changes in the electromagnetic waves as a result of damage events (e.g., holes, recesses, etc.) within the external surface of the base plate.

[0105] FIG. **8** shows an exemplary embodiment of an alternative single or multiple-axis sensing device **149** with an array of embedded resistance elements having different electrical resistance values across the array contained in one or more planes of the sensing device **149** prior to an impact. The sensing device **149** may be coupled, adhered, or attached to a base material layer or substrate **151** or directly to the structure of interest **16**. The impact sensing device **149** illustratively includes a non-conductive material **153** and an array of embedded resistive elements **155** and **157** formed into rows and columns, respectively (e.g., each row includes resistive elements **155***a*-**155***h*, and each column includes resistive elements **157***a*-**157***i*). The sensing device **149** resistive elements **155**, **157** are coupled at interconnects or nodes at each intersection of the respective rows and columns. In the illustrative embodiment of FIG. **8**, there are nine columns and ten rows of resistive elements **155**,**157**, and each individual resistive element has two interconnects for electrical conductivity. For example, a first resistive element **155***a* in row ten, column one has two interconnects on either side of the first resistive element (e.g., **175**, **177**).

[0106] With further reference to FIG. **8**, measurement system **20** is electrically coupled to first and second electrical contacts **171** and **173**, respectively, to measure electrical attributes (e.g., impedance, voltage, resistance) therebetween. In one illustrative embodiment, power signals are applied by measurement system **20** to first electrical contacts **17**, and measurements are taken by measurement system **20** at second electrical contacts **173** to determine electrical attributes of the impact sensor array **149**. Note that a single drawing element number has been assigned to each first electrical contact **171** and each second electrical contact **173**, followed by a pair of letters. The signal path between each opposing first electrical contact **171** and second electrical contact **173** is illustratively measured independently from every other signal path. Moreover, each pair of contacts **171**, **173** defining a signal path are identified by reference numbers **171**, **173** followed by the same letter (i.e., **171***aa*, **173***aa* defines a first signal path, **171***bb*, **173***bb* defines a second signal path, etc.). The use of the single drawing reference number for all contacts of the same category (e.g., electrical source contacts **171**) should not be used to infer a limitation on the design, structure, or processes used in this embodiment of the disclosure with reference to the contacts themselves. In other words, measurements in this embodiment may be taken between respective first and second electrical contacts **171**, **173** in the same row, as well as in different rows.

[0107] A different measurement of electrical attributes (e.g., impedance, voltage, resistance) may be taken for each row by means of measuring via measurement system **20** each first and second electrical contacts **171**, **173** in a row independently of the other rows in the exemplary impact sensor array **149**. In particular, measurements are taken which permit determination of impact events based on measuring electrical attributes from each path between first electrical contacts **171** and second electrical contacts **173**. In certain illustrative embodiments, measurements may be taken by the measurement system **20** between each first electrical contact **171** and

every second electrical contact **173**. For example, measurements may be taken between first electrical contact **171***aa* and each of the second electrical contacts **173***aa*-**173***jj*, between first electrical contact **171***bb* and each of the second electrical contacts **173***aa*-**173***jj*, and so forth, concluding with measurements taken between first electrical contact **171***jj* and each of the second electrical contacts **173***aa*-**173***jj*.

[0108] As shown in FIG. **8**, a series of resistors **155** is illustratively placed between nodes that are formed at the intersection of each column and row. For example, a series of resistors **155***a*, **155***b*, **155***c*, **155***d*, **155***e*, **155***f*, **155***g*, **155***h*, are coupled to each other serially with a first electrical contact **171***jj* on one interconnect of the first resistor **155***a* in row ten, and a second electrical contact **173***jj* on one interconnect of the last resistor **155***h* in row ten. Each resistor **155** may have a different resistance value between the first resistor **155***a* and the last resistor **155***h* in row ten. The values of each resistor **155** in each row in this embodiment are illustratively formed to individually and serially have a range from low to high, high to low, or a different resistance value. More particularly, each resistor **155** in a row in this embodiment may have a different resistance value than the other resistors **155** in the same row. For example, the first resistor **155***a* in row ten may have a 50 ohm resistance, the second resistor **155***b* in row ten may have a 45 ohm resistance, the third resistor **155***c* in row ten may have a 40 ohm resistance, the fourth resistor **155***d* in row ten may have a 35 ohm resistance, the fifth resistor **155***e* in row ten may have a 30 ohm resistance, the sixth resistor **155***f* in row ten may have a 25 ohm resistance, the seventh resistor **155***g* in row ten may have a 20 ohm resistance, and the eighth resistor **155***h* in row ten may have a 15 ohm resistor. Each row in this illustrative embodiment sensing device **149** may have a similar scheme of resistance or electrical attribute values, e.g., high to low, low to high, or different resistance. In this illustrative embodiment, resistors **157** which form the column links between nodes formed by the rows and columns are of the same resistance values. However, the individual column resistors **157** may also be selected to have different resistance values such as a progression of high to low resistance, low to high resistance, or different resistance values for two or more resistors **157** from column to column. An embodiment may also exist where both rows and columns both have different resistance values. The selection of a gradient change in resistance values in this embodiment contributes to provide a capability of determining position of impact in the impact sensing device **149**.

[0109] Referring to FIG. **9**, the sensing device of FIG. **8** is shown during or after an impact event. The illustrative sensing device of FIG. **8** is shown with ten rows (corresponding to first electrical contacts **171***aa*-**171***jj*) and nine columns (including a fifth column **181**, a sixth column **183**, a seventh column **185**, and an eighth column **187** as shown in FIG. **9**). The enumeration of the rows (i.e., first, second, third), starts at a top row then progresses downward, and the column enumeration (i.e., first, second, third), starts at an upper left most column and progresses to the right. An impact area or damage zone **179** is formed after an impact event in the impact sensing device **149**. Resistors **155**, **157** are damaged or disconnected from the impact sensor array **149** as a result of the exemplary impact event. As a result, a resistance path changes between first electrical contacts **171***gg*, **171***hh*, **171***ii* and second electrical contacts **173***gg*, **173***hh*, **173***ii* due to the impact area or damage zone. In other words, an electrical path changes between these respective contacts **171***gg* and **173***gg*, **171***hh* and **173***hh*, **171***ii* and **173***ii*. For example, an electrical path between first electrical contact **171***hh* and second electrical contact **173***hh* will now substantially take an electrical path of resistors **155** in the eighth row **171***hh* to the resistors **157***g*, **157***f* between eighth and sixth rows **171***hh* and **171***ff* in the fifth column, then travel along row **171***ff* to a node at row **171***ff* and column eight **187**, then to the resistor **157***f*, **157***g* between rows **171***ff* and **171***hh* to the node at the eighth row **171***hh* and column eight **187**, then complete the path to second electrical contact **173***hh* through the eight row **171***hh*. The sensing device of FIGS. **8** and **9** operates by measuring resistance and then matching or determining which pathways are still active versus ones that are not which then determines the path of least resistance. This path of least resistance data may then be used to determine which sections of the impact sensing device **149** are still present and which ones that are not or are degraded, and thereby determine a plot or position of impact event damage to the impact sensing device **149**.

[0110] FIG. **10** shows an exemplary alternative embodiment of a multiple axis impact sensing structure or device **191** with a conductive layer **193**. A first series of first electrical contacts **197***a*-**197***k*, a second series of first electrical contacts **199***a*-**199***l*, a first series of second electrical contacts **201***a*-**201***k*, and a second series of second electrical contacts **203***a*-**203***l* are electrically coupled to the conductive layer **193**. The first series of first electrical contacts **197***a*-**197***k* are illustratively applied to a left hand outer edge of the conductive layer **193**. The second series of first electrical source contacts **199***a*-**199***l* are illustratively applied to a top outer edge area of the conductive layer **193**. The first series of second electrical contacts **201***a*-**201***k* are illustratively applied to a right hand outer edge of the conductive layer **193**. The second series of second electrical contacts **203***a*-**203***l* are illustratively applied to a bottom outer edge of the conductive layer **193**. The first and second series of first electrical contacts **197***a*-**197***k* and **199***a*-**199***l*, respectively, and the first and second series of second electrical contacts **201***a*-**201***k* and **203***a*-**203***l*, respectively, are evenly distributed along the above described outer edges of the conductive layer **193** and are in electrical contact with the conductive layer **193**. The conductive layer **193** may be manufactured from a variety of materials which are homogenous with respect to electrical conductivity (e.g., copper, aluminum, or carbon). More particularly, the conductive layer **193** may be formed of any material having suitable electrical attributes for the sensing methodology detailed herein. The illustrative embodiment impact sensing device **191** operates by sensing electrical attributes (e.g., impedance, resistivity, conductivity) between first electrical contacts **197***a*-**197***k* and **199***a*-**199***l* and second electrical contacts **201***a*-**201***k* and **203***a*-**203***l*.

[0111] Measurements from the sensing of electrical attributes by the sensing device **191** may be processed by processing system **12**, which then determines position and size of impact events **13** by a variety of calculations. More particularly, electrical attributes are illustratively processed by the measurement system **20** which then communicates with the damage detection processing system **30**. The processing system **30** may include a triangulation processor, which based on paths of least resistance or a look up table stored in memory **31**, associates position and size of damage with electrical attribute data such as resistance or conductance sensed between at least one set of first electrical contacts **197**, **199** and any of the second electrical contacts **201**, **203**.

[0112] In an exemplary embodiment of sensing device **191**, the measurement system **20** may serially or in parallel measure an electrical attribute (e.g., resistance), between first electrical contacts **197***a*-**197***k* and opposing second electrical contacts **201***a*-**201***k*, as well as between first electrical contacts **199***a*-**199***l* and opposing second electrical contacts **203***a*-**203***l* to determine electrical attributes sensed in the electrically conductive layer **193** between the respective contacts **197**, **199**, **201**, **203**. The damage detection processing system **30** determines an electrical attribute data value between one or more pairs of selected first and second electrical contacts **197** and **201**, **199** and **203**. At least two of the electrical data values associated with two or more pairs of selected first and second electrical contacts **197** and **201**, **199** and **203** may be used in a triangulation method by damage detection processing system **30** for identifying a damage area based on comparing a known electrical data value associated with a pre-damage state of the electrically conductive layer **193** to a post-damage event state of the electrically conductive layer **193**. Additional electrical data values associated with additional pairs of selected first and second electrical contacts **197** and **201**, **199** and **203** may be further used by the processing system **30** in the triangulation processor to determine additional size information associated with a damage area **13**.

[0113] In an illustrative example, a first electrical data value associated with a post-damage state of the electrically conductive layer **193** may be sensed by the measurement system **20**, for example through a read-out bus coupled to first electrical contact **197***c* and second electrical contact **201***i*. A second electrical data value associated with a post-damage state of the electrically conductive layer **193** may be sensed by the measurement system **20**, for example through a read-out bus coupled to first electrical contact **199***j* and second electrical contact **203***c*. If a damage event **13** has occurred between these above reference contacts (**197***c*, **201***i* and **199***j*, **203***c* in this example), then a higher resistance value will be detected in the electrically conductive layer **193** where the conductive layer **193** has been damaged or degraded between the sensed contact points (e.g., **197***c*, **201***i* and **199***j*, **203***c*). In this example, if the electrically conductive layer **193** has been damaged between, for example, first electrical contact **197***c* and second electrical contact **201***i*, then a resistance reading between these contacts (e.g., **197***c*, **201***i* and **199***j*, **203***c*) will show a higher resistance value than a baseline resistance value associated with an undamaged electrically conductive layer **193**. Obtaining at least two electrical data values, where each electrical data value is associated with a linear path of least resistance between two opposing first and second electrical contacts **197**, **199** and **201**, **203** creates a coordinate point for determining position of a damage event **13** to the electrically conductive layer **193**.

[0114] The coordinate point of the damage event **13** referenced above may be determined by the damage detection processing system **30** based on a comparison of the electrical attributes or data values sensed between any two given first and second electrical contacts **197**, **199** and **201**, **203**, for example, by showing higher resistance thereby indicating damage as compared to a baseline resistance associated with no damage to the electrically conductive layer **193**. Higher sensed resistance data between sensed first electrical contacts **197**, **199** and second electrical contacts **201**, **203** may be used by processing system **30** to create a virtual impact damage plot comprising intersecting virtual damage plot lines representing damage coordinates (i.e., two sets of intersecting first and second electrical contacts **197**, **199** and **201**, **203** showing higher resistance across the electrically conductive layer **193**). The processing system **30** may then plot damage to the electrically conductive layer **193** using the above reference damage coordinates and output this damage position to the user interface **50** which may then be used to determine further responses or action by either a user, for example through user interface **50**, or an output device **90**, such as a machine which is operably coupled to the processing system **30**.

[0115] FIG. **11** shows an exemplary alternative embodiment impact sensing structure or device **211** including an electrically conductive layer **213** having varying electrical or electromagnetic properties across the electrically conductive layer **213** sensed by means of a series of electrical contacts **215**, **217** positioned along opposing sides. In one illustrative embodiment, the layer **213** has a gradient of resistance (e.g., high to low, or low to high from left side to right side of the layer **213**). In other words, the layer **213** includes a gradient defined as a plane with a high material conductivity on one side, and a low material conductivity on an opposite side. Illustratively, the layer **213** may be formed of graphite, known to be a good resistive material.

[0116] The series of electrical contacts comprise first electrical contacts **215***a*-**215***k* and second electrical contacts **217***a*-**217***k* electrically coupled to the layer **213**. Illustratively, the first electrical contacts **215***a*-**215***k* are electrically coupled to a left outer edge of the electrically conductive layer **213**, while the second electrical contacts **217***a*-**217***k* are electrically coupled to a right outer edge of the electrically conductive layer **213**. The second electrical contacts **217***a*-**217***k* are illustratively arranged equidistant from each other along the right outer edge of the electrically conductive layer **213**. The first electrical contacts **215***a*-**215***k* are also illustratively arranged equidistant from each other along the left outer edge of the electrically conductive layer **213**. The measurement system **20** senses electrical attributes such as resistance or conductance between any two first and second electrical contacts **215** and **217**. The damage detection processing system **30** referenced above may determine position and size of an impact event **13** which damages or degrades the electrically conductive layer **213**.

[0117] With further reference to the illustrative impact sensing device **211** of FIG. **11**, a first virtual grid line **221***a* may be determined between first electrical contact **215***a* and second electrical contact **217***k* based on a first electrical data measurement which is different from a baseline measurement previously determined between these two contacts **215***a* and **217***k*. A second virtual grid line **221***b* may be determined between first electrical contact **215***b* and second electrical contact **217***j* based on a second electrical data measurement which senses an electrical attribute between these two contacts **215***b* and **217***j* which is different from a baseline measurement previously determined between these two contacts **215***b* and **217***j*. Subsequent virtual grid lines **221***c*-**221***k* may be determined between each successive pair of contacts **215***c*-**215***k* and **217***i*-**217***a*.

[0118] In the FIG. **11** embodiment impact sensing structure **211**, the different resistances measured across the electrically conductive layer **213** assist in correlating the size and location of the impact event damage or degradation in the electrically conductive layer **213**. In other words, the virtual grid line **221** between any pair of first and second electrical contacts **215** and **217** will have a different value due to the change in resistance across the electrically conductive layer **213**. In this

embodiment, a lookup table stored in memory **31** may be used by damage detection processing system **30** to facilitate determination of position and size of impact event damage **13** in the electrically conductive layer **213**.

[0119] FIG. **12** is a detailed view of exemplary impact sensing structure **211** of FIG. **11** showing a portion of the conductive layer **213** before an impact. A dashed line represents a virtual grid line **221** between first electrical contact **215***c* and second electrical contact **217***i* through the electrically conductive layer **213**. An electrical data measurement is sensed by the measurement system **20** coupled to the first and second electrical contacts **215***c* and **217***i*. More particularly, the measurement system **20** senses an electrical attribute between these two electrical contacts **215***c* and **217***i*. In the FIG. **12** embodiment, there is no damage between these two electrical contacts **215***c* and **217***i*, therefore the sensed electrical data measurement is not different from a baseline measurement previously determined between these two electrical contacts **215***c* and **217***i* and stored in memory **31**. As such, the processing system **12** determines no damage exists between first and second electrical contacts **215***c* and **217***i*.

[0120] FIG. **13** is a detailed view similar to FIG. **12** of exemplary impact sensing structure or device **211** having the conductive layer **213** after an impact event creating an impact damage area **225** in the electrically conductive layer **213**. A dashed line represents a virtual grid line **223** between first electrical contact **215***c* and second electrical contact **217***i* around the impact damage area **225** in the electrically conductive layer **213**. An electrical data measurement is sensed by the measurement system **20** coupled to the electrical contacts **215***c* and **217***i*. More particularly, the measurement system **20** senses an electrical attribute between these two electrical contacts **215***c* and **217***i*. In the FIG. **13** embodiment of sensing device **211**, there is damage between these two electrical contacts **215***c* and **217***i* in the form of impact damage area **225**. As such, the sensed electrical data measurement is different from a baseline measurement previously determined between these two electrical contacts **215***c* and **217***i* (FIG. **12**) and the damage detection processing system **30** determines that damage exists between these two electrical contacts **215***c* and **217***i*. The measurement system **20** takes additional electrical data measurements between additional pairs of first electrical contacts **215** and second electrical contacts **217** in order to create additional virtual grid lines **233** which are associated with the impact damage area **225** and are used by processing system **30** to further refine position and size information associated with the impact damage area **225**.

[0121] Embodiments of the sensing devices of the present disclosure may be affixed directly to the structure of interest **16** which is desired to be monitored for impact or tampering, be built into the structure of interest **16**, or be formed into structures which may be selectively attachable and detachable from a structure of interest **16**. An embodiment of the disclosure may be selectively attached or detached from a structure of interest **16** by means of couplers, such as a latching system, hooks, hook and loop fasteners (i.e., Velcro), latches, screws, adhesives, or other suitable fasteners.

[0122] FIGS. **14-18** shows steps associated with an exemplary method of manufacture for installing an exemplary impact sensing structure **211** as in FIG. **11** onto a portion of a structure of interest **16**, such as a vehicle **231**. While structure of interest **16** is shown in FIGS. **14-18** as a vehicle, and more particularly as a tank, it should be appreciated that that impact sensing structure **211** may be used on a wide variety of structures, including aircraft, ships, spacecraft, and containers.

[0123] FIG. **14** shows an exemplary first method of manufacture step for preparing a surface **233** needed to ensure a required adhesion of subsequent layers associated with installation of an exemplary sensing structure **211** installed onto a facing or outer surface of the vehicle **231** where detection is desired. A surface preparation step of FIG. **14** may comprise processing which ensures adhesion or coupling with the exemplary sensing structure **211** which is to be installed in a later step. Such surface preparation may include sanding and/or attaching couplers or coupling structures, such as hook and loop fasteners (i.e., Velcro®) bolts, latches, or adhesives, to the structure of interest **231** where the coupling structures are adapted to releasably or non-releasably couple to the exemplary sensing structure **211** which is installed in a later step.

[0124] FIG. **15** shows an exemplary second method of manufacture step for applying an electrically isolating (i.e., non-conductive) material **235** to define a non-conductive layer associated with a later installation of an exemplary sensing structure **211**, such as that shown in FIG. **11**, installed onto a facing of the equipment item **231** where detection is desired. Illustratively, this step comprises applying an electrically isolative base layer, for example a polymer paint, on the prepared surface **233**. The electrically isolating material **235** may be applied using a spray or painting apparatus which applies the material **235** onto the prepared surface. The isolating material **235** may illustratively be made from epoxy, polymers, including thermoplastics and thermosets, ceramic, paper, silicon, or other electrically non-conductive material suitable to having electrically conductive pathways coupled to the non-electrically conductive material. In certain illustrative embodiments, the electrically isolating material **235** may comprise MYLAR®, fiberglass, or KAPTON®.

[0125] FIG. **16** shows an exemplary third method of manufacturing step for applying an exemplary conductive layer **213** associated with a sensing structure, such as shown in FIG. **11**, installed onto a facing of the equipment item **231** where detection is desired. Illustratively, conductive layer **213** may be formed of graphite as it is known to be a good variable resistive material. The conductive layer **213** may be formed of any suitable electrically conductive material, such as copper or aluminum, which may be applied using conventional circuit trace processes, such as direct depositing, vapor depositing, etching, painting, flame spraying, laminating, or gluing the conductive material onto the electrically isolating material **235**.

[0126] FIG. **17** shows an exemplary fourth method of manufacturing step for applying electrical interconnects, illustratively first and second electrical contacts **215***a*-**215***k* and **217***a*-**217***k*, to the electrically conductive layer **213** associated with sensing structure **211** installed onto a facing of an equipment item **231** where detection is desired. The electrical contacts **215***a*-**215***k* and **217***a*-**217***k* are illustratively electrically coupled to the layer **213** through conductive epoxy and electrically coupled to the measurement system **20** through inset copper or flexible copper circuit buses.

[0127] FIG. **18** shows an exemplary fifth method of manufacturing step for applying an overcoat layer **237** which will provide protection and concealment of the structures previously provided in FIGS. **14-17** associated with a sensing structure, such as shown in FIG. **11**, installed onto a facing of the vehicle **231** where detection is desired. Illustratively, the layer **237** is formed of an electrically isolative material for

preventing the sensor layer from shorting out and for protecting the sensor layer from the environment. The layer **237** may comprise a polymer paint of a color matching the exterior surface of the vehicle **231** for concealment of the sensing device **211**.

[0128] In further illustrative embodiment methods of manufacture, additional electrically isolative and conductive layers may be successively applied intermediate the electrically isolative layer **235** and the electrically conductive layer **213**. Each grouping of electrically isolative and conductive layers **235** and **213** may define separate sensor layer assemblies **15***a*, **15***b*, **15***c* similar to the type detailed above in connection with FIG. **3**.

[0129] Additional details of an exemplary sensor data acquisition and processing system **241** are shown in FIGS. **19** and **20** as including many of the features of the system **12** detailed above in connection with FIG. **1**. More particularly, FIG. **19** is a detailed block diagram of a portion of the damage detection and remediation system **10** of FIG. **1**, showing illustrative sensor data acquisition and processing system **241** coupled to sensing device **243**, while FIG. **20** is a detailed schematic diagram of a portion of the illustrative sensor data acquisition and processing system **241** of FIG. **19**. Sensing device **243** may be of any type further detailed herein, for example sensing device **14**.

[0130] As shown in FIGS. **19** and **20**, the measurement system **20** may include a multiplexer **245** (shown as a plurality of interconnected multiplexers **245**A-**245**D in FIG. **20**) coupled to a sensor array or sensing device **243** and a measurement device **247**. The impact detection processing system **30** may include a micro-controller **249** coupled to the multiplexer **245** and the measurement device **247**. The micro-controller **249** is illustratively coupled to user interface **50** and memory **31**. A communication device **250** may operably couple the micro-controller **249** with the user interface **50** and/or a main computer **261**.

[0131] FIG. **20** shows representative sensor data acquisition and processing system **241** configured to be used in connection with illustrative sensing device **14**, **243** of the type detailed above. A plurality of electrical connections **257** operably couple multiplexers **245**A and **245**B with sensing layer **15***a* (FIG. **3**), and operably couple multiplexers **245**C and **245**D with sensing layers **15***b* (FIG. **3**). It should be appreciated that additional multiplexers **245** may be coupled to sensing layers **15***a* and **15***b*, or to at least one additional sensing layer **15***c* (FIG. **3**). A voltage regulator **255** may be in electrical communication with the micro-controller **249** and illustratively provides a consistent stepped-down voltage (e.g., from a 24 volt input to 5 volt output).

[0132] The operation of this exemplary sensor data acquisition and processing system **241** is further explained in connection with FIGS. **19** and **20**. The sensor arrays **243** are illustratively connected to the measurement and data acquisition and processing system **241** in order to provide feedback to user interface **50**. This sensor data acquisition and processing system **241** may utilize multiplexer **245** connected to a microcontroller **249** to cycle through one, more than one, groups, or successive sensor elements on selected or every sensor array **243** or sensor array **243** layer. The multiplexer **245** is illustratively connected to measurement device **247** to check each sensor array **243**. Data from one or more sensing arrays **243** are sent back to the microcontroller **249** for network data logging and data processing, and potentially for display via the user interface **50**.

[0133] FIG. **21** shows an exemplary system in accordance with the disclosure which includes a plurality of data acquisition and processing systems. In this example, approximately ten impact sensor arrays **265***a*-**265***j*, illustratively together with associated measurement systems **20** and damage detection processing systems **30**, are coupled to an electrical bus **267**. In one illustrative embodiment, the bus **267** may comprises a CAN (Controller Area Network). The sensor arrays **265** may each comprise any one of those further detailed herein, such as impact sensing device **14**, **149**, **191**, or **211**. In one illustrative embodiment, these exemplary impact sensor arrays **265***a*-**265***j* each include a microcontroller and a resistance measurement system. The bus **267** is coupled with a controller **263** which includes a power supply. A main computer **261** or processing system is coupled to the controller **263** which processes information sensed through the impact sensor arrays **265***a*-**265***j*. A human machine interface (HMI) **269** provides information on impact events to a user.

[0134] FIG. **22** shows an exemplary method of operation for an illustrative impact detection and remediation system **10** in accordance with one embodiment of the disclosure such as, for example, that used in connection with the sensing device or panel **14** of FIG. **3**. At step **271**, processing system **12** in accordance with one embodiment of the disclosure generates panel baseline data at a specified time interval. More particularly, the measurement system **20** monitors the sensing device or panel **14** and supplies representative data to the damage detection processing system **30** which establishes the panel baseline data and stores it in memory **31**. In one illustrative embodiment, the baseline measurement data determination is based on a predetermined data value associated with a state of layer assembly **15** by taking an electrical signal measurement before the damage event **13**. Illustratively, this may be accomplished by the measurement system **20** monitoring the conductive paths defined by traces **5** (i.e., measuring portions) of layer assemblies **15***a*, **15***b*, **15***c* between respective contacts **7** and **9**, as further detailed herein.

[0135] At step **273**, the processing system then compares the currently generated data from the initial baseline generation produced from step **271**, if the data has changed this signals that an impact event has occurred, and the process then simultaneously moves to steps **277** and **275**. The currently generated data comprises measurements from monitoring the conductive paths defined by traces **5** (i.e., measuring portions) of layer assemblies **15***a*, **15***b*, **15***c* reported at a predetermined basis. The predetermined basis may include a fixed time interval or an input event, such as a temperature change.

[0136] At step **275** of FIG. **22**, the panel **14** reporting the impact sends X, Y, Z coordinate data via a CAN (Controller Area Network) bus **267**. As further detailed herein, the X, Y, Z coordinate data may be determined by comparing different adjacent traces **5** (i.e., measuring portions), for example in different layer assemblies **15***a*, **15***b*, **15***c*. It should be noted that a CAN system is one form of a communication or network system which may be used. Other communication or networking systems may be used to perform the function of facilitating control signals between systems or components. At step **277**, the panel's microcontroller or measurement system **20** requests a new baseline via the CAN bus **267** from the processing system **30**, thus resetting the baseline data to the current scenario in order to detect a new impact event. At step **279**, the CAN bus **267** may transfer the coordinate data from step **275** to the processing system **30**. At step **281**, the pro-

cessing system **30** illustratively calculates data including the impact locations, sizes, time data of the damage event, and corresponding damage assessment (e.g. a category of the damage event), and sends this data to HMI (Human Machine Interface) system **269** and/or a controller **261** for an automated response such as orienting an output device **90**, such as a sensor or weapon, on an axis **21** aligned with an impact event origin area **17**.

[0137] The category of the damage event may include a plurality of causes of the damage event which are correlated with at least one damage event characteristic. The plurality of causes may include a small arms category (e.g. 3 mm to 8 mm projectiles), an explosively formed penetrator category, high energy ballistic impact category (e.g., micro meteoroids or space debris impacts), a structural fatigue category, a heat event category, and a .50 or larger caliber projectile category.

[0138] Continuing with step **285** of FIG. **22**, a determination is made based on input from step **281** for an automatic or HMI response which then triggers additional processing steps associated with the respective automatic or HMI response. The step **285** processing system responds to inputs from step **281** based on pre-programmed conditions. At step **287**, an HMI command input for an HMI triggered event is sent via the CAN bus **267** to an HMI device after a determination at step **285** that a manual response output may be required based on determinations made at step **281**. At step **287**, data from step **281** based on the determination at step **285** is transferred onto the CAN bus **267** and sent to the HMI device **269** in order to notify a user of the potential need for the manual response output. At step **289**, the manual response output determined from step **285** is executed based on a user input directing execution of the manual response output. Note that a user may decline to execute the manual response output as well after the user has been notified of the need for a decision on whether to execute the manual response output. The HMI system **269** via the CAN bus **267** may control devices coupled directly to the CAN bus **267** such as a weapon, sensor system, a communication system, a non-lethal weapon system, a display system, or other device a user will desire to manually trigger via a manual response output signal. An alternate embodiment may have the HMI system **269** interacting via a bus system with a controller system or a cloud computing system in communication with the HMI system **269**.

[0139] At step **291**, an automatic response is input in the CAN bus **267** after a determination is made at step **285** that an automatic event is required based on data from step **281**. At step **293**, the automatic event from step **285** is executed based on the determination at step **285** and the automatic event data from step **291**.

[0140] FIG. **23** shows an alternative method of operation for an illustrative impact detection and remediation system **10** such as, for example, that used in connection with the sensing device or panel **14** of FIG. **3**, and the data acquisition and processing system **241** of FIGS. **19-21**. At step **301**, processing system **12** commences operation and one or more impact sensor panel baseline data is generated at specified time intervals. Impact sensor panel **14** baseline data may include resistance values for sections of the impact sensor panel such as all discrete circuits (e.g., **5** in FIG. **3**) on each impact sensor panel. At step **303**, a resistance measurement system applies a voltage to electrical contacts (e.g., **9**) on all layers (e.g., **15***a*, **15***b*, **15***c*) making up a panel **14**. As detailed herein, panel **14** may be formed of one or more layers **15***a*, **15***b*, **15***c*. At step **305**, the resistance measurement system measures electrical resistance between all contacts (e.g., **7**, **9**) on all layers (e.g., **15***a*, **15***b*, **15***c*). At step **307**, resistance data produced by the resistance measurement system is sent to a system controller via a bus system (e.g., CAN bus **267** from FIG. **21**).

[0141] At step **309** of FIG. **23**, a determination is made of whether the resistance measurement data acquired at step **305** is different than baseline data acquired at step **301** or stored previously. At step **311** all pairs of contacts (e.g., **7**, **9**) are identified on each layer (e.g. **15***a*, **15***b*, **15***c*) where resistance data has changed from the baseline data if the determination at step **309** determines the resistance measurement data is different and resistance change data is stored associated with an identifier associated with each discrete circuit (e.g., **5**) between the pairs of contacts (e.g., **7**, **9**). At step **323**, processing continues by identifying all layers (e.g., **15***a*, **15***b*, **15***c*) associated with the changed resistance data associated with pairs of contacts where resistance changed occurred that was determined at step **309** then processing continues at step **325**.

[0142] At step **312**, one of the resistance data is selected from the resistance data stored at step **309**. At step **313**, all resistance change data associated with each discrete circuit stored at step **309** is compared to a selected resistance data associated with one of the discrete circuits selected at step **312** and a determination is made of whether the selected resistance data has the largest resistance value change from the baseline data as compared to all resistance data stored at step **309**. At step **315**, if the determination at step **312** is the selected resistance data has the largest resistance value change, then the selected resistance data is associated with a center point identifier data at step **315** indicating a center point or area of an impact event then processing continues at step **325**. If the selected resistance data is found to not to have the highest resistance change among the resistance data collected at step **309**, then processing continues at step **317**.

[0143] With reference to step **317** of FIG. **23**, all resistance change data associated with each discrete circuit stored at step **309** is compared to a selected resistance data associated with one of the discrete circuits selected at step **312** and a determination is made of whether the selected resistance data has the least resistance value change from the baseline data as compared to all resistance data stored at step **309**. At step **315**, if the determination at step **312** is the selected resistance data has the least resistance value change, then the selected resistance data is associated with an edge of the impact area data at step **319** indicating an edge point or area of an impact area event in the impact sensor panel then processing continues at step **325**. If the selected resistance data is found to not to have the least resistance change among the resistance data collected at step **309**, then processing continues at step **321**. At step **321**, the selected resistance data and associated discrete circuit is associated within an impact event edge area but not a center of impact area then processing continues at step **325**. At step **325**, a calculation of position, size, angle of impact is determined from data from steps **315**, **319**, **321**, and **323** then processing continues at step **327**. At step **327**, a determination is made of whether any of the resistance data associated with discrete circuits determined and stored at step **309** has not been selected at step **313** and subsequently processed in steps **313-325**. If yes, then processing continues from step **327** at step **312**. If no, then processing from step **327** terminates at step **329**.

[0144] FIG. **24** shows an alternative method of operation for an illustrative impact detection and remediation system **10**

such as, for example, that used in connection with the sensing device or panel **149** of FIGS. **8** and **9**, and the data acquisition and processing system **241** of FIGS. **19-21**. At step **331**, processing the system **12** commences operation and one or more impact sensor panel baseline data is generated at specific time intervals. Baseline data of impact sensor panel **149** may include resistance values for sections of the impact sensor panel such as all discrete circuits (e.g., **155** and **157** in FIG. **8**) on each impact sensor panel. At step **333**, resistance measurement system applies a voltage to electrical contacts (e.g., **171**) making up panel **149**. At step **335**, the resistant measurement system measures electrical resistance between all contacts series (e.g., **171** and **173**). At step **337**, resistance data produced by the resistance measurement system is sent to a system controller via a bus system (e.g., CAN bus **267** from FIG. **21**).

[0145] At step **339** of FIG. **24**, a determination is made of whether the resistance measurement data acquired at step **335** is different than baseline data acquired at step **331** or stored previously. If not, then the process returns to step **331**. If there has been a change in baseline data at step **339**, then the process continues to step **341** where all pairs of contacts (e.g., **171** and **173**), are identified where resistance data has changed from the baseline data. At step **342**, one of the resistance data is selected from the resistance data stored at step **341**.

[0146] At step **343**, all resistance change data associated with each discrete circuit stored at step **341** is compared to a selective resistance data associated with one of the discrete circuit selected at step **342** and a determination is made of whether the selected resistance data has the largest resistance value change from the baseline data as compared to all resistance data stored at step **341**. At step **345**, if the determination at step **342** is the selected resistance data has the largest resistance value change, then the selected resistance data is associated with a center point identifier data at step **345** indicating a center point or area of an impact event, processing then continues at step **353**. If the selected resistance data is found to not to have the highest resistance change among the resistance data collected at step **341**, then processing continues at step **347**.

[0147] With reference to step **347** of FIG. **24**, all resistance change data associated with each discrete circuit stored at step **341** is compared to a selected resistance data associated with one of the discrete circuits selected at step **342** and a determination is made of whether the selected resistance data has the least resistance value change from the baseline data as compared to all resistance data stored at step **341**. At step **349**, if the determination at step **342** is the selected resistance data has the least resistance value change, then the selected resistance data is associated with an edge of the impact area data at step **349** indicating an edge point or area of an impact area event **13** in the impact sensor panel **149** then processing continues at step **353**. If the selected resistance data is found to not have the least resistance change among the resistance data collected at step **341**, then processing continues at step **351**. At step **351**, the selected resistance data and associated discrete circuit is associated within an impact event edge area but not a center of impact area then processing continues at step **353**. At step **353**, a calculation of position, size, angle of impact is determined from data from steps **345**, **349**, and **351** and processing continues at step **355**. At step **355**, a determination is made of whether any of the resistance data associated with discrete circuits is determined and stored at step **341** has not been selected at step **343** and subsequently processed in steps **347**, **349**, **351**, **353**. If yes, then processing continues from step **355** at step **343**. If no, then processing from step **355** terminates at step **357**.

[0148] FIG. **25** shows an alternative method of operation for an illustrated impact detection and remediation system **10** such as, for example, that used with the illustrative sensing device or panel **191** of FIG. **10** and the data acquisition and processing system **241** of FIGS. **19-21**. At step **361**, processing system **12** commences operation and one or more impact sensor panel baseline data is generated at specific time intervals. Impact sensor panel **191** baseline data may include resistance values for layer of sensor panel **191**. At step **363**, a resistance measurement system applies voltage to electrical contact series **197** and **199** making up panel **191**. As detailed herein, panel **191** may be made up of a great resistant panel. At step **365**, the resistance measurement system measures electrical resistance between electrical contact series **197**, **199** and **201**, **203**. At step **367**, resistance data produced by the resistance measurement system is sent to a system controller via a bus system (e.g., CAN bus **267** from FIG. **21**).

[0149] At step **369** of FIG. **25**, a determination is made of whether the resistance measurement data acquired at step **365** is different than baseline data acquired at step **361** or stored previously. If not, then the process returns to step **361**. If there is a change in the baseline data determined at step **369**, then the process continues to step **371** where all pairs of contacts are identified where resistance data has changed from the baseline data if the determination at step **369** determines the resistance measurement data is different and resistance change data is stored associated with an identifier associated with each discrete circuit between the pairs of contacts. At step **373**, processing continues by assigning a row and column coordinate point to each pair of contacts with a resistance change.

[0150] At step **375**, the largest resistance change coordinate points to identify the center of the impact. At step **377**, the process creates a grid of coordinate points having changes of resistance. At step **379**, the system determines a gradient of resistance change coordinate points to identify edges of impact. Next, at step **381**, the system calculates a position and the size of impact event **13**.

[0151] FIG. **26** shows a further method of operation of an illustrative impact detection and remediation system **10** such as, for example, that used in connection with the illustrative sensing device or panel **211** of FIG. **11** and the data acquisition and processing system **241** of FIGS. **19-21**. At step **391**, processing the system **12** commences operation and one or more impact sensor panel baseline data is generated at specific time intervals. Impact sensor panel **211** baseline data may include resistance values for sections of the impact sensor panel **211** such as on layer **213**. At step **393**, a resistance measurement system applies a voltage to electrical contacts **215** making up panel **211**. As detailed herein, panel **211** may be made up of a gradient resistant layer. At step **395**, the resistant measurement system measures electrical resistance between all contacts **215** and **217**. At step **397**, resistance data produced by the resistance measurement system is sent to a system controller via a bus system (e.g., CAN bus **267** from FIG. **21**).

[0152] At step **399** of FIG. **26**, a determination is made of whether the resistance measurement data acquired at step **395** is different than baseline data acquired at step **391** or stored previously. At step **401** all pairs of contacts **215** and **217** are

identified where resistance data has changed from the baseline data if the determination step at **399** determines a resistant measurement data is different and resistance change data is stored associated with an identifier associated with each discrete circuit between the pair of contacts **215** and **217**. At step **402**, one of the resistance data is selected from the resistance data stored at step **401**.

[0153] At step **403**, all resistance change data associated with each discrete circuit stored at step **401** is compared to a selected resistance data associated with one of the discrete circuits selected at step **402** and a determination is made of whether the selected resistance data has the largest resistance value change from the baseline data as compared to all resistance data stored at step **401**. At step **405**, if the determination at step **403** is the selected resistance data has the largest resistance value change, then the selected resistance data is associated with a center point identifier data at step **405** indicating a center point or area of an impact event **13** then processing continues at step **413**. If the selected resistance data is found to not to have the highest resistance change among the resistance data collected at step **401**, then processing continues at step **407**.

[0154] With reference to step **407** of FIG. **23**, all resistance change data associated with each discrete circuit stored at step **401** is compared to a selected resistance data associated with one of the discrete circuits selected at step **402** and a determination is made of whether the selected resistance data has the least resistance value change from the baseline data as compared to all resistance data stored at step **401**. At step **405**, if the determination at step **402** is the selected resistance data has the least resistance value change, then the selected resistance data is associated with an edge of the impact area data at step **409** indicating an edge point or area of an impact area event in the impact sensor panel then processing continues at step **413**. If the selected resistance data is found to not to have the least resistance change among the resistance data collected at step **401**, then processing continues at step **411**. At step **411**, the selected resistance data and associated discrete circuit is associated within an impact event edge area but not a center of impact area then processing continues at step **413**. At step **413**, a calculation of position, size, angle of impact is determined from data from steps **405**, **409**, and **411** then processing continues at step **415**. At step **415**, a determination is made of whether any of the resistance data associated with discrete circuits determined and stored at step **401** has not been selected at step **403** and subsequently processed in steps **403-413**. If yes, then processing continues from step **415** at step **402**. If no, then processing from step **415** terminates at step **417**.

[0155] An embodiment of a damage control system **16** of the present disclosure may entail use of an impact sensor array **243** on a system or microelectronics device which is coupled to a controller. As is known, the controller may reconfigure the system or a microelectronics device. For example, a damage control system embodiment may include an impact event sensor array **243**, such as described herein, which couples with a damage control system. The damage control system is configured to receive a damage event input from the impact sensor system with impact event data such as, for example, coordinates and size of damage. The damage control system then may reassign functions in a damaged area of a microcontroller or control system. For example, the microcontroller may be a field programmable gate array (FPGA) which has the capacity to be reprogrammed after a damage event and still maintain functionality.

[0156] With reference to FIGS. **27** and **28**, the illustrative impact detection and remediation system **10** may also be coupled with other event detection systems or devices. For example, an event detection device, illustratively an escalation of force (EOF) reduction system **421**, may include an embodiment of the impact detection and remediation system **10** coupled with an acoustic detection system **423** which is configured to detect specific sound signatures, such as a rifle shot. This illustrative EOF reduction system **421** is of particular use in a chaotic environment where multiple sound signatures exist but only one or a few of the sound signatures are significant. For example, illustrative EOF reduction system **421** may be used on a vehicle **425** forming part of a convoy maneuvering through a crowded urban area that have civilians who are not hostile to the convoy. A single person hiding in the crowd could fire a shot into the vehicle **425** in the convoy, which then may result in a number of external weapons being discharged, thereby confusing an observer or operator of the vehicle **425** as to the true source of the person firing a shot into their vehicle **425**. An embodiment of the EOF reduction system **421** with the impact sensor system **10** and acoustic detection system **423** may be used to orient a vehicle operator to the direction (along origination axis **21** (FIG. **2**)) where actual incoming fire is originating (origin **17**(FIG. **2**)) and thereby reduce the potential for friendly fire casualties.

[0157] While the following description describes the impact sensor system **10** for use in connection with vehicle **425**, as further detailed herein, the system **10** may find use in a variety of applications, including being mounted to other structures of interest **16**, such as electronic devices, aircraft, etc. Further, the illustrative vehicle **425** in the embodiment of FIGS. **27** and **28** may be of any conventional type, such as military vehicles, law enforcement vehicles, rescue trucks, communications vehicles, and construction equipment. Illustratively, vehicle **425** may be a high mobility multipurpose wheeled vehicle (HMMWV or Humvee) including wheels **426** driven by an engine (not shown). An occupant compartment **428** including ballistic resistant windows **430** and armor plates **432** (FIG. **27**).

[0158] In FIGS. **27** and **28**, a plurality of sensing devices or panels **265** of the type detailed above are positioned in different locations around the vehicle **425**. Each sensing device **265** may be coupled to an external or outer surface of the vehicle **425** in one of the manners further detailed herein. The combination of sensing devices **265** define an impact sensing perimeter **435** about the vehicle **425**. For example, first sensing device **265***a* is positioned on an external surface of a front passenger door, second sensing device **265***b* is positioned on an outer surface of first rear passenger door, third sensing device **265***c* is positioned on an outer surface of a first rear quarter panel, fourth sensing device **265***d* is positioned on an outer surface of a rear deck, fifth sensing device **265***e* is positioned on an outer surface of a second rear quarter panel, sixth sensing device **265***f* is positioned on an outer surface of a second rear passenger door, and seventh sensing device **265***g* is positioned on an outer surface of a front driver door. It should be appreciated that the number and locations of sensing devices **265** may vary depending upon the structure of interest, operational requirements, environmental conditions, etc. Moreover, the plurality of sensing devices **265** may be consolidated such that a substantially continuous sensing

surface extends around the exterior of the vehicle **425**. As further detailed herein, a main computer **261** or processing system may be coupled to the controller **263** which processes information sensed through the impact sensing devices **265***a*-**265***g*.

[0159] The illustrative vehicle **425** includes a traversal portion, illustratively a rotatable turret **427** disposed around a center opening **429** (FIG. **28**). As is known, the turret **427** is configured for rotation about a vertical rotational axis **431** extending through the opening **429**. A protective structure **433** (FIG. **27**) may be coupled to the turret **427**. The protective structure **433** illustratively includes a plurality of ballistic windows coupled to a support structure for protecting an occupant or operator **436** within the opening **429**. A protective shield **434** may be supported by the turret **427** in spaced relation to the protective structure **433**. In the case of armed conflict, foreign internal defensive operations or riot control engagements, structure **433** may protect the operator or gunner **436** who controls a targeting device, such as a weapon **437**, illustratively a machine gun or other device such as a water cannon, high intensity laser or other anti-personnel or non-lethal personnel weapon system. A seat **438** (FIG. **29**) may be operably coupled to the turret **427** to rotate concurrently therewith and to support the operator **436** (FIG. **29**).

[0160] The weapon **437** is operably coupled to a weapon mount **440** which, in turn, is operably coupled to the turret **427**. A slewing mechanism **435** may adjust the horizontal (traverse or azimuth) and vertical (elevational) orientation of the weapon **437**. As is known, rotation of the weapon **437** and about the vertical rotational axis **431** within a horizontal plane (i.e., traverse movement) may be controlled by operation of a turret actuator **444**A (FIG. **29**). The weapon mount **440** may also pivot the weapon **437** about a horizontal axis **446** and within a vertical plane (i.e., elevational movement). A weapon mount actuator **444**B may be operably coupled to the weapon mount **440** to pivot the weapon **437** about the horizontal axis **446** (FIG. **29**).

[0161] As is known, the slewing mechanism **435** may be operated remotely from the turret **427**. Illustratively, the operator **436** may be positioned outside of the turret **427**, for example within the passenger compartment of the vehicle **425** or at a location remote from the vehicle **425**. In other illustrative embodiments, the slewing mechanism **435** may be automatically controlled by system **10** for alignment of the weapon **437** with origination axis **21**, while discharge of the weapon **437** is controlled through a triggering device manipulated by operator **436** located outside of the turret **427**.

[0162] With further reference to FIGS. **27** and **28**, the illustrative acoustic detection system **423** may include an acoustic sensor or antenna **439** configured to detect soundwaves generated by an event, illustratively the firing of a projectile. The antenna **439** illustratively includes a plurality of audio inputs or microphones **442** (illustratively at least 3) configured in a known manner. More particularly, the microphones **442** are spaced apart from one another to detect and record acoustic signals or soundwaves, and time offsets of acoustic signals which are representative of the muzzle noise of the firearm and/or the soundwave emitted by a projectile. The detection system **423** is illustratively configured to process the signals and their time offsets in a manner for determining at least the direction in which the firearm of interest is located. In certain illustrative embodiments, the acoustic detection system **423** may comprise the Boomerang shooter detection system available from Raytheon BBN Technologies of Cambridge, Mass.

[0163] As also shown in FIGS. **27** and **28**, additional sensors may also be used with the impact sensing devices **265** and/or acoustic sensor **439**. For example, an imaging system **448** including a plurality of video surveillance sensors or cameras **441***a*, **441***b*, **441***c*, **441***d* may be positioned proximate opposing corners of the vehicle **425**. Similarly, 360 degree video sensors or cameras **443***a* and **443***b* may be added to the vehicle **425**. Cameras **441** and **443** may be adapted to detect weapon (e.g., rifle) fire flashes. More particularly, the cameras **441** and **443** may be used to detect flash events which are cross checked against data from the impact sensing devices **265** and/or the acoustical sensor **439**. The EOF reduction system **421** may then cross correlate the information from the multiple sensor systems **265**, **439**, **448** thereby increasing the probability of accurate identification of hostile fire being directed towards a structure of interest, in this case vehicle **425** in a convoy.

[0164] Cameras **441** may include full motion video with zoom capability that may be moved or slewed to a point of origin of an impact event such as where a hostile person is directing rifle fire to a convoy vehicle **425**. These video cameras **441** with zoom capability may then be used to gather specific evidence associated with the use of hostile force by a gunman in a crowded area by means of high definition video imagery which is oriented towards a point of origin **17** of an impact event **13**. An illustrative embodiment of the system **10** may also include conflict resolution software or programming which permits it to deal with multiple impact events as well as providing instructions for focusing on higher priority significant event signatures and thus have the system **10** ignore inputs which are of lesser interest.

[0165] The user interface **50** may include a graphical user interface (GUI) providing information to a user to permit separate identification of different points of origin for different types of threats or impact events such as a different color in the GUI for each separate point of origin of an impact event, and a time delay which leaves an impact event indicator on for a predetermined period of time or a range of a point of origin area. A system may also be tied to a navigation system which suggests a route of egress from an area where impact events are occurring given terrain or obstacles which are in a particular area. For example, the system may have a map therewith (e.g., GOOGLE® maps) wherein the system **10** may overlay the map onto a video display of the impact events.

[0166] Characterization of impact event objects may be made based on multiple sensor systems. For example, a combination of an impact event sensor **265**, acoustic sensor system **439**, and a video imager system **448** may be used to correlate a source of an impact event based on a look up table having signature data associated with specific impact event originating devices or systems such as a particular type of rifle or projectile system.

[0167] Also, the multiple sensor variant may receive inputs from portable illumination beacons, or smart beacons **446**, which are programmed to emit wireless coded signals which imaging system **448** including imager/360 degree camera **443** may detect (FIG. **27**). These smart beacons **446** may be placed onto individual equipment, persons, or locations where friendly forces or equipment is located. The smart beacons **446** are illustratively capable of receiving a pulse of light in one or more frequencies and then trigger a burst signal which is not detectable by means such as humans viewing the system through night vision goggles, etc. The system **10** may interrogate the smart beacons **446** multiple times in order to

ensure relative bearing and distance may be determined based on Doppler effect and changes in bearing. The smart beacons **446** may be cross referenced with other systems such as the GCCS **72**.

[0168] Each smart beacon **446** may be programmed/provided with a verification system which permits verification that the user/wearer is in fact a friendly force. Such a verification system may include voice recognition for a single matched user, a proximity sensor for detecting an RFID system embedded into a larger system which has identity verification systems, or a coded input mechanism which a user may occasionally be prompted to input a verification code which then will unlock the smart beacon's verification capability.

[0169] Each smart beacon **446** is illustratively programmable and requires a user to input a new code to continue its operation past a certain amount of time, such as 24 hours. The smart beacon **446** may also have an anti-tamper design which would prevent directly reading the smart beacon's coded information. Also, the smart beacon **446** may have a self-wipe function which could be triggered by a user before the beacon **446** could fall into undesired hands. The self wipe function could also be triggered by a failure to reset the system in a certain number of hours such as 24 hours or after a substantial impact which causes damage to the smart beacon beyond a prescribed point.

[0170] Illustrative user interfaces **50** may include display devices operably coupled to the turret **427**. In addition to visual indicators such as display devices, the user interface **50** may provide other sensory indicators to the operator **436**. For example, an audible damage event warning may be provided to the operator **436** upon the detection of a damage event. The audible damage event warning may also provide details on the location of the damage event and/or an orientation of the damage event on the vehicle **425**.

[0171] With reference now to FIGS. **29-32**, the display devices may include a plurality of visual indicators arranged in a plurality of vertically spaced annular bands. Each annular band illustratively includes a plurality the circumferentially spaced light sources **445**, each light source **445** being oriented radially inwardly from an inner arcuate surface of the turret **427**. The light sources **445** may comprise light emitting diodes (LEDs), illustratively multi-color LEDs.

[0172] Activation of the light sources **445** is based upon input from the system **12** on the determined origin of the ballistic impact. More particularly, the system **12** may activate the light sources (identified by reference numbers **445***a*) based upon the relative position of the turret **427** in order to ensure that the light sources **445***a* are oriented along axis **21** toward the origin **17** of the projectiles/impact objects **19** (FIG. **2**). Thus, when the turret **427** rotates, the active light sources **445***a* also move to maintain the relative bearing to the calculated point of origin **17** for the projectiles/impact objects **19**. Such capability may be facilitated by operably coupling the user interface **50** into a position identifier system, such as a global positioning system (GPS), global command and control system (GCCS) **72**, inertial navigation system, etc.

[0173] The active light sources **445***a* may change color, light intensity, and/or flash to assist the operator in identifying proper orientation of the turret **427**. For example, the light sources **445***a* may change from red, to yellow, to green as the turret **427** is rotated into proper positioning with axis **21** of impact origin **17**. Alternatively, the light sources **445***a* may change light intensity as the turret **427** is rotated into alignment with axis **21**, or may flash at different rates as the turret **427** is rotated into alignment with axis **21**.

[0174] The system **12** may also activate the light sources **445**A based upon the relative elevation of the weapon **437** in order to ensure that the light sources **445***a* are oriented on the source of the projectiles/impact objects. Thus, when the weapon **437** is pivoted about axis, the active light sources **445***a* also move to maintain the relative bearing to the calculated point of origin **17** for the projectiles/impact objects **19** (FIG. **2**).

[0175] In one illustrative embodiment, different vertically spaced bands of light sources **445***a* may be illuminated to indicate desired weapon elevation along axis **21**. Alternatively, the color of the light sources may change based upon desired weapon elevation. The intensity or flashing rates of the light sources **445***a* may also change as the weapon **437** is pivoted into alignment with origination axis **21**. In a similar manner, different circumferentially or horizontally spaced columns of light sources **445***a* may be illuminated to indicate desired traverse or horizontal position of weapon about vertical axis **431**.

[0176] User inputs, such as right and left control grips **447***a* and **447***b* may be manipulated by the hands of an operator to move the weapon **437**. The control grips **447***a* and **447***b* may each include input buttons to control traverse and elevation of the weapon **437** by controlling actuators **444***a* and **444***b*, as further detailed herein. Control grips **447***a* and **447***b* may also include conventional triggers to permit the operator **434** to fire the weapon **437**. In certain illustrative embodiments, the control grips **447***a* and **447***b* may provide a tactile damage event warning which is sent to the operator **436**. Such tactile event warning may provide an indication of a damage event alone or together with an orientation of the damage event on the vehicle **425**. For example, the control grips **447***a* and **447***b* may vibrate or shake to alert the operator **436** of a damage event. Subsequent vibrating or shaking of the right control grip **447***a* will provide an indication to the operator **436** to move the weapon **437** to the right, while subsequent vibration or shaking of the left control grip **447***b* will provide an indication to the operator **436** to move the weapon **437** to the left.

[0177] A dashboard **449** may be supported by the weapon mount **440** and is positioned in front of the seat **438** for supporting the control grips **447***a* and **447***b*. The dashboard **449** is operably coupled to the turret **427** and is configured to rotate therewith. A heads-up display **451** may extend above the dashboard **449** and includes a transparent panel **452** having a surface upon which information is projected for view by the operator **434**.

[0178] With reference to FIGS. **31** and **32**, different images **459**, **461**, **463**, **465**, **467** may be projected on the display **451**. For example, images **459** and **463** may indicate to the operator **434** to change the elevation of the weapon **437** based upon the detected impact for alignment with origination axis **21**. More particularly, images **459***a* and **463***a* indicate that the weapon **437** should be raised, while images **459***b* and **463***b* indicate that the weapon should be lowered. Similarly, images **461** and **465** may indicate to the operator **434** to traverse (move the rotational position of) the weapon **437** based upon the detected impact for alignment with origination axis **21**. More particularly, images **461***a* and **465***a* indicate that the weapon should be rotated to the right, while arrows **461***b* and **465***b* indicate that the weapon should be rotated to the left. Information, such as video and/or text instructions may be projected within display window **467**.

[0179] In certain illustrative embodiments, display **453** is operably coupled to the human machine interface (HMI) **269**, while display **455** is operably coupled to the global command and control system (GCCS) **72**. Displays **453** and **455** may provide graphical information and/or receive input from the operator.

[0180] A further illustrative embodiment is shown in FIGS. **33-35**B as including turret **427** with the seat **438** removed for clarity. Circumferentially spaced right and left indicator uprights or columns **471***a* and **471***b*, respectively, are supported on opposite sides of turret opening **472** receiving weapon **437**. Each indicator upright **471***a* and **471***b* includes a plurality of display devices arranged in a plurality of laterally spaced columns. More particularly, each upright **471***a* and **471***b* illustratively includes a plurality the vertically spaced light sources **473**. The light sources **473** may comprise light emitting diodes (LEDs), illustratively multi-color LEDs.

[0181] Activation of the light sources **473** is based upon input from the system **12** on the determined origin of the ballistic impact. More particularly, the system **12** activates the light sources (identified by reference numbers **473***a*) based upon the relative position of the weapon **437** in order to ensure that the light sources **473***a* are oriented on the source of the projectiles/impact objects. Thus, when the elevation of the weapon **437** changes, the active light sources **473***a* also move to maintain the relative bearing to the calculated point of origin **17** for the projectiles/impact objects **19** (FIG. **2**).

[0182] Rotational orientation of the turret **427** may be indicated by changing intensity, color, or flash patterns of light sources **473***a*. For example, green may indicate the proper direction in which to turn, while red means no adjustment is required. Alternatively, light intensity or flashing patterns of light sources **473***a* may indicate the proper direction in which to turn. Alternatively, additional displays may be used in combination with light sources **473** on uprights **471** to facilitate proper orientation of turret **427**.

[0183] User inputs, such as control grips **447** may be manipulated by the hands of an operator to rotate turret **427**, and thus the weapon **437**. Control grips **447** may also include conventional triggers to permit the operator to fire the weapon **437**.

[0184] FIG. **34**A shows a situation when the origin **17** of impact object is determined to be above the target alignment of the weapon **437**. As such, the light sources **473***a* on an upper end of the indicator uprights **471** are activated. As the weapon **437** is raised, the active light sources **473***a* lower toward the middle of the uprights **471**. At the proper target elevation (i.e., when the weapon **437** is aligned with origination axis **21**), the light sources may change intensity, color, or flash to provide a clear indication to the operator that the proper target has been acquired.

[0185] FIG. **34**B shows a situation when the origin **17** of impact object is determined to be below the target alignment of the weapon **437**. As such, the light sources **473***a* on a lower end of the indicator uprights **471** are activated. As the weapon **437** is lowered, the active light sources **473***a* raise toward the middle of the uprights **471**. At the proper target elevation (i.e., when the weapon **437** is aligned with origination axis **21**), the light sources **473***a* may change intensity, color, or flash to provide a clear indication to the operator that the proper target has been acquired.

[0186] In certain illustrative embodiments, the computer **40** may include a timer configured to run upon detection of an impact event. The timer may cause the user interface **50** to reduce the impact event LED indicators **445**, **473** to zero brightness following a predetermined time after a particular impact event. A user may engage an interface control to display historical impact information either on the LED indicators **445**, **447** or on a video display. The video display history may be a video type replay showing a recreation of the impact events from a specific point in time to another point in time. For example, the video display may show an overhead image of a vehicle which is taking fire and the impact sensor is detecting fire. This vehicle display may be rotatable to show points of estimated origin relative to the vehicle and probable point of origin.

[0187] If the system **10** includes a video imaging system **448**, having either full motion video and/or 360 degree cameras, then impact geometry and vector information may be overlaid over the video system based on plotting of coordinates and matching those coordinated to grid coordinate systems associated with the video camera and vehicle **425**. A gun camera may also be added to a user's weapon system which may capture images of where a weapon **437** is being oriented. The gun camera may be utilized with the system for providing confirmatory information on impact event point of origin **17** information.

[0188] As further detailed herein, a feature of the user interface **50** may be a system which indicates elevation for an impact event point of origin **17**. For example, LEDs may be run vertically along a weapon mount which flashes horizontal lines for where probable elevation of an impact event origin **17** is assessed. The weapon **437** may then be manually or automatically controlled to bring it into alignment with the axis of origin **21**.

[0189] Further illustrative embodiments, exemplary damage detection and remediation system **10** may be coupled with a firing mechanism for a weapon **437** and a command and control system which has a position tracking feature, a status update feature, and is internetworked with other security force units, both fixed and mobile, such as the Global Command and Control System (GCCS) **72**. When the firing mechanism is activated at the same time an impact event with matching characteristics of an attack occur then the exemplary embodiment of the damage detection and remediation system **10** may automatically post an update to the GCCS **72** that an attack is occurring in a specific location as well as clips from video systems, mounted with the weapon system, of the points of origin **17** of the attack. A panic button may be added to user interface **50** which may be used to confirm an attack which may then be posted to the GCCS **72** as a confirmation of attack in progress.

[0190] Another embodiment may include a damage detection and remediation system **10** which detects a pattern of attack damage or impact event which corresponds to an improvised explosive device (IED) attack which may then trigger an automatic request for assistance, with a location from a location tracking system such as the GCCS **72**, and a request for medical evacuation absent an override command being input by a user.

[0191] In yet other illustrative embodiments of damage detection and remediation system **10**, upon detecting damage events **13** in certain locations of the vehicle **425**, onboard computers may run diagnostic tests of various vehicle systems. For example, if the system **10** detects that a damage event **13** has occurred in the engine compartment of the vehicle **425**, then the onboard computer may run a diagnostic

test of the vehicle's engine. Upon completion of the diagnostic test, the computer may transmit information regarding vehicle status to a fleet management computer at a vehicle maintenance facility. The fleet management computer may thereby keep track of damage sustain by various vehicles and schedule maintenance, as required.

[0192] Although the disclosure has been described in detail with reference to certain preferred embodiments, variations and modifications exist within the spirit and scope of the disclosure as described and defined in the following claims.

1. A detection system comprising:

a first layer adapted to sense a damage event, the first layer adapted to conduct an electromagnetic signal and having a plurality of electromagnetic signal measuring portions oriented in a first orientation;

at least one input coupling point in electrical communication with at least one of the plurality of electromagnetic signal measuring portions of said first layer, said at least one input coupling adapted to receive an electromagnetic signal input;

an electromagnetic signal generator coupled to said at least one input coupling point to provide the electromagnetic signal input;

at least one output coupling point in electrical communication with at least one of the plurality of electromagnetic signal measuring portions of said first layer, said at least one output coupling point adapted to provide an electromagnetic signal output;

an electromagnetic signal measuring device coupled to said at least one output coupling point; and

a processing system adapted to control said electromagnetic signal generator and said electromagnetic signal measuring device, wherein said processing system is adapted to determine data on the damage event based on changes between said electromagnetic signal input at the at least one input coupling point and said electromagnetic signal output at the at least one output coupling point.

2. A detection system as in claim **1**, wherein the first layer includes a non-conductive substrate and the electromagnetic signal measuring portions are defined by conductive traces applied to the non-conductive substrate.

3. A detection system as in claim **1**, wherein said damage event is further determined based on a comparison of changes of said electromagnetic signal outputs between a first electromagnetic signal measuring portion and second electromagnetic signal measuring portion.

4. A detection system as in claim **3**, wherein said electromagnetic signal changes of said first electromagnetic signal measuring portion includes a baseline measurement data determination based on a predetermined data value associated with a first state of said first layer by taking an electromagnetic signal measurement of said first layer before at least one said damage event.

5. A detection system as in claim **4**, wherein said electromagnetic signal output from said first electromagnetic signal measuring portion is reported to said electromagnetic signal measuring device at a predetermined basis comprising at least one of a fixed time interval, and an input event including at least one of a temperature change, occurrence of said damage event to establish a new baseline data, and user input.

6. A detection system as in claim **3**, wherein said electromagnetic signal output of said second electromagnetic signal measuring portion is processed by said processing system after said electromagnetic signal is applied to said at least one coupling point and an electromagnetic signal output change is sensed from said first electromagnetic signal measuring portion due to a damage or transformation of said first layer.

7. A detection system as in claim **1**, wherein said damage data comprises at least one of a location of said damage event, a size data for said damage event, time data of said damage event, and a category of said damage event.

8. A detection system as in claim **7**, wherein said category of damage event comprises plurality of causes of said damage event which are correlated with at least one damage event characteristic.

9. A detection system as in claim **8**, wherein said plurality of causes comprises at least one of the following: small arms category, an explosively formed penetrator category, high energy ballistic impact category, a structural fatigue category, a heat event category, and a .50 or larger caliber projectile category.

10. A detection system as in claim **9**, wherein said small arms category comprises 3 mm to 8 mm projectiles.

11. A detection system as in claim **9**, wherein said high energy ballistic impact category includes micro meteoroids or space debris impacts.

12. A detection system as in claim **1**, further comprising an output device adapted to produce damage data including a representation of a damage alert, a damage event location, and a damage event origination axis.

13. A detection system as in claim **12**, wherein said output device comprises a graphical/visual user interface which depicts an orientation of said damage event on a structure coupled to said first layer.

14. A detection system as in claim **12**, wherein said output device produces an audible damage event warning describing a location of said damage event which depicts an orientation of said damage event on a structure coupled to said first layer.

15. A detection system as in claim **12**, wherein said output device produces a tactile damage event warning which is sent to a human which depicts an orientation of said damage event on a structure coupled to said first layer.

16. A detection system as in claim **12**, wherein said output device produces a command to control a weapon in response to an orientation of said damage event on a structure coupled to said first layer.

17. A detection system as in claim **12**, wherein said output device produces a damage event notification signal that is transmitted by a communication device which depicts an orientation of said damage event on a structure coupled to said first layer.

18. A detection system as in claim **1** further comprising:

a second layer adapted to sense a damage event, the second layer adapted to conduct an electromagnetic signal and having a plurality of electromagnetic signal measuring portions oriented in a second orientation different from the first orientation, wherein said second layer is adapted to conduct the electromagnetic signal in a different direction than said first layer;

at least one input coupling point in electrical communication with at least one of the plurality of electromagnetic signal measuring portions of said second layer, said at least one input coupling adapted to receive an electromagnetic signal input;

an electromagnetic signal generator coupled to said at least one input coupling point to provide the electromagnetic signal input;

at least one output coupling point in electrical communication with at least one of the plurality of electromagnetic signal measuring portions of said second layer, said at least one output coupling adapted to provide an electromagnetic signal output;

the electromagnetic signal measuring device portion coupled to said at least one output coupling point; and

the processing system adapted to control said electromagnetic signal generator and said electromagnetic signal measuring device, wherein said processing system is adapted to determine data on a damage event based on changes between said electromagnetic signal input at the at least one input coupling point and said electromagnetic signal output at the at least one output coupling point.

19. A detection system as in claim **18**, wherein the second layer includes a non-conductive substrate and the electromagnetic signal measuring portions are defined by conductive traces applied to the non-conductive substrate.

20. A detection system as in claim **19**, wherein the processing system determines the location of the damage event along a first axis based upon measurement data from the first layer, and determines the location of the damage event along a second axis based upon measurement data from the second layer.

21. A detection system as in claim **19**, further comprising one or more additional layers in third or additional orientations adapted to each conduct an electromagnetic signal in a different direction than any other layer.

22. A detection system as in claim **19**, wherein said damage data comprises at least one of a location of said damage event, a size data for said damage event, time data of said damage event, and a category of said damage event.

23. A detection system as in claim **22**, wherein said category of said damage event comprises a plurality of causes of said damage event which are correlated with at least one damage event characteristic.

24. A detection system comprising:

a sensing device configured to be operably coupled to a structure of interest and to sense a damage event, the sensing device including a first layer, a plurality of measuring portions supported by the first layer, each of the measuring portions including an input coupling point and an output coupling point and adapted to conduct an electrical signal from the input coupling point to the output coupling point;

a measurement system in electrical communication with the measuring portions of the sensing device, the measurement system configured to provide electrical signal inputs to the input coupling points of the sensing device, and configured to measure electrical signal outputs at the output coupling points of the sensing device;

a damage detection processing system operably coupled to the measurement system, the processing system configured to determine data on the damage event based on changes between the electrical signal inputs at the input coupling points and the electrical signal outputs at the output coupling points, the data including a location of the damage event on the sensing device and a damage event origination axis directed to the point of origin of the damage event; and

a user interface operably coupled to the damage detection processing system and configured to provide a visual display of the damage data including a representation of a damage alert, the damage event location and the damage event origination axis.

25. The detection system of claim **24**, wherein the visual display depicts an orientation of the damage event on the structure of interest.

26. The detection system of claim **24**, further comprising a second layer supported parallel to the first layer, and a plurality of measuring portions supported by the second layer in an orientation different from the plurality of measuring portions supported by the first layer, each of the measuring portions supported by the second layer including an input coupling point and an output coupling point and adapted to conduct an electrical signal from the input coupling point to the output coupling point.

27. The detection system of claim **26**, wherein the processing system determines the location of the damage event along a first axis based upon data from the measurement portions supported by the first layer, and determines the location of the damage event along a second axis based upon data from the measurement portions supported by the second layer.

28. The detection system of claim **27**, further comprising at least one additional layer, and a plurality of measuring portions supported by the at least one additional layer in an orientation different from the plurality of measuring portions supported by the other layers.

29. A detection system comprising:

a first sensing device including:

a first layer configured to be operably coupled to a structure of interest and to sense impacts, the first layer including a plurality of measuring portions, each of the measuring portions adapted to conduct an electrical signal from an input coupling point to an output coupling point;

a first measurement system in electrical communication with the first sensing device, the first measurement system including a multiplexer configured to provide electrical signal inputs to the input coupling points of the first sensing device, and configured to measure electrical signal outputs at the output coupling points of the first sensing device;

a first damage detection processing system operably coupled to the first measurement system, the first processing system configured to determine data on a damage event from the sensed impact based on changes between the electrical signal input at the input coupling point and the electrical signal output at the output coupling point, the data including a location of the damage event on the sensing device and an damage event origination axis directed to the point of origin of the ballistic impact;

a second sensing device positioned in spaced relation to the first sensing device, the second sensing device including:

a second layer supported parallel to the first layer and configured to be operably coupled to the first layer to sense impacts, the second layer including a plurality of measuring portions, each of the measuring portions adapted to conduct an electrical signal from an input coupling point to an output coupling point;

a second measurement system in electrical communication with the second sensing device, the second measurement system including a multiplexer configured to provide electrical signal inputs to the input cou-

pling points of the second sensing device, and configured to measure electrical signal outputs at the output coupling points of the second sensing device;

a second damage detection processing system operably coupled to the second measurement system, the second processing system configured to determine data on a damage event from the sensed impact based on changes between the electrical signal input at the input coupling point and the electrical signal output at the output coupling point, the data including a location of the damage event on the sensing device and an damage event origination axis directed to the point of origin of the ballistic impact;

an electrical connector operably coupling the first sensing device with the second sensing device;

a main controller operably coupled to the first sensing device and the second sensing device; and

a user interface operably coupled to the damage detection processing systems of the first and second sensing devices, the user interface configured to provide a visual display of the damage data including a representation of a damage alert, the damage event location and the damage event origination axis.

30. A method of detecting a damage event associated with a structure of interest, the method comprising the steps of:

coupling a first layer to a structure of interest, the first layer including a plurality of measuring portions oriented in a first direction;

providing input electrical signals to input coupling points of each of the measuring portions;

measuring output electrical signals from output coupling points of each of the measuring portions; and

determining data on a damage event based on changes between the electrical signal inputs at each of the input coupling points and the electrical signal outputs at each of the output coupling points.

31. The method of claim **30**, wherein the determining data step includes calculating an electrical signal change based on a comparison between a first measuring portion and a second measuring portion.

32. The method of claim **31**, wherein the first signal measurement portion comprises a baseline measurement data determination based on a predetermined data value associated with a first state of the first layer by taking an electrical signal measurement portion of the first layer before the damage event.

33. The method of claim **32**, wherein said first electromagnetic signal measurement portion is reported at a predetermined basis comprising a fixed time interval or an input event including temperature change, occurrence of said damage event establishing a new baseline data or user input.

34. The method of claim **31**, wherein said second electromagnetic signal measurement portion is measured after said electromagnetic signal is applied to said at least one coupling point and a different electromagnetic signal is sensed from said first layer due to a damage or transformation of said first layer.

35. The method of claim **30**, wherein said damage data comprises location of said damage event, a size data for said damage event, time data of said damage event, and a category of said damage event.

36. The method of claim **35**, wherein said category of damage event comprises plurality of causes of said damage event which are correlated with at least one damage event characteristics.

37. The method of claim **36**, wherein said plurality of causes comprises at least one of the following: small arms category, an explosively formed penetrator category, high energy ballistic impact category, a structural fatigue category, a heat event category, and a .50 or larger caliber projectile category.

38. The method of claim **30**, further comprising an output device adapted to produce damage data including a representation of a damage alert, a damage event location, and a damage event origination axis.

39. The method of claim **38**, wherein said output device comprises a visual user interface which depicts an orientation of said damage event on a structure coupled to said first layer.

40. The method of claim **38**, wherein said output device produces an audible damage event warning describing a location of said damage event which depicts an orientation of said damage event on a structure coupled to said first layer.

41. The method of claim **38**, wherein said output device produces a tactile damage event warning which is sent to a human which depicts an orientation of said damage event on a structure coupled to said first layer.

42. The method of claim **38**, wherein said output device produces a command to control a weapon in response to an orientation of said damage event on a structure coupled to said first layer.

43. The method of claim **38**, wherein said output device produces a damage event notification signal that is transmitted by a communication device which depicts an orientation of said damage event on a structure coupled to said first layer.

44. The method of claim **30**, further comprising:

a second layer adapted to sense ballistic impacts, the second layer adapted to conduct an electromagnetic signal and having a plurality of electromagnetic signal measuring portions oriented in a second orientation, wherein said second layer is adapted to conduct the electromagnetic signal in a different direction than said first layer;

at least one input coupling point in electrical communication with at least one of the plurality of electromagnetic signal measuring portions of said second layer, said at least one input coupling adapted to receive an electromagnetic signal input;

an electromagnetic signal generator coupled to said at least one input coupling point;

at least one output coupling point in electrical communication with at least one of the plurality of electromagnetic signal measuring portions of said second layer, said at least one output coupling adapted to provide an electromagnetic signal output;

an electromagnetic signal measuring device portion coupled to said at least one output coupling point; and

a processing system adapted to control said electromagnetic signal generator and said electromagnetic signal measuring device, wherein said processing system is adapted to determine data on a damage event based on changes between said electromagnetic signal input at the

at least one input coupling point and said electromagnetic signal output at the at least one output coupling point.

45. The method of claim **44**, further comprising one or more additional layers in third or additional orientations adapted to each conduct a current flow in a different direction than any other layer.

46. The method of claim **44**, wherein said plurality of damage data comprises location of said damage event, a size data for said damage event, time data of said damage event, a category of said damage event.

47. The method of claim **45**, wherein said category of damage event comprises plurality of causes of said damage event which are correlated with at least one damage event characteristics.

* * * * *