US 20120246900A1

(19) United States

(12) Patent Application Publication

(10) Pub. No.: US 2012/0246900 A1

(43) Pub. Date: Oct. 4, 2012

Shimmel et al.

(54) PORTABLE EQUIPMENT SYSTEM MOUNT

(76) Inventors: **Jeffrey T. Shimmel**, Solsberry, IN (US); **Todd Mehringer**, Jasper, IN (US); **Garric Henry**, Bloomington, IN (US)

(21) Appl. No.: **13/249,067**

(22) Filed: **Sep. 29, 2011**

Related U.S. Application Data

(60) Provisional application No. 61/387,972, filed on Sep. 29, 2010.

Publication Classification

(51) **Int. Cl.**

F16B 47/00	(2006.01)
B23P 11/00	(2006.01)
F16M 13/02	(2006.01)

(52) **U.S. Cl.** **29/407.08**; 248/205.4; 29/525.02; 29/428; 29/446

(57) **ABSTRACT**

A mounting system having a base plate, multiple mounting apertures adapted to releasably hold a man-portable equipment item, and non-invasive fasteners for attaching to a structure without damaging the structure. The non-invasive fasteners can include adhesive bonded fasteners which couple to a structure without damaging the structure and permit attachment and removal of the mounting system. The base plate and mounting apertures are designed to minimize mounting footprint and orient the man-portable equipment item in relation to a user structure or aperture such as a turret, egress point, portal, or other structure which requires a user to pass through a structure and have immediate access to the man-portable equipment item.

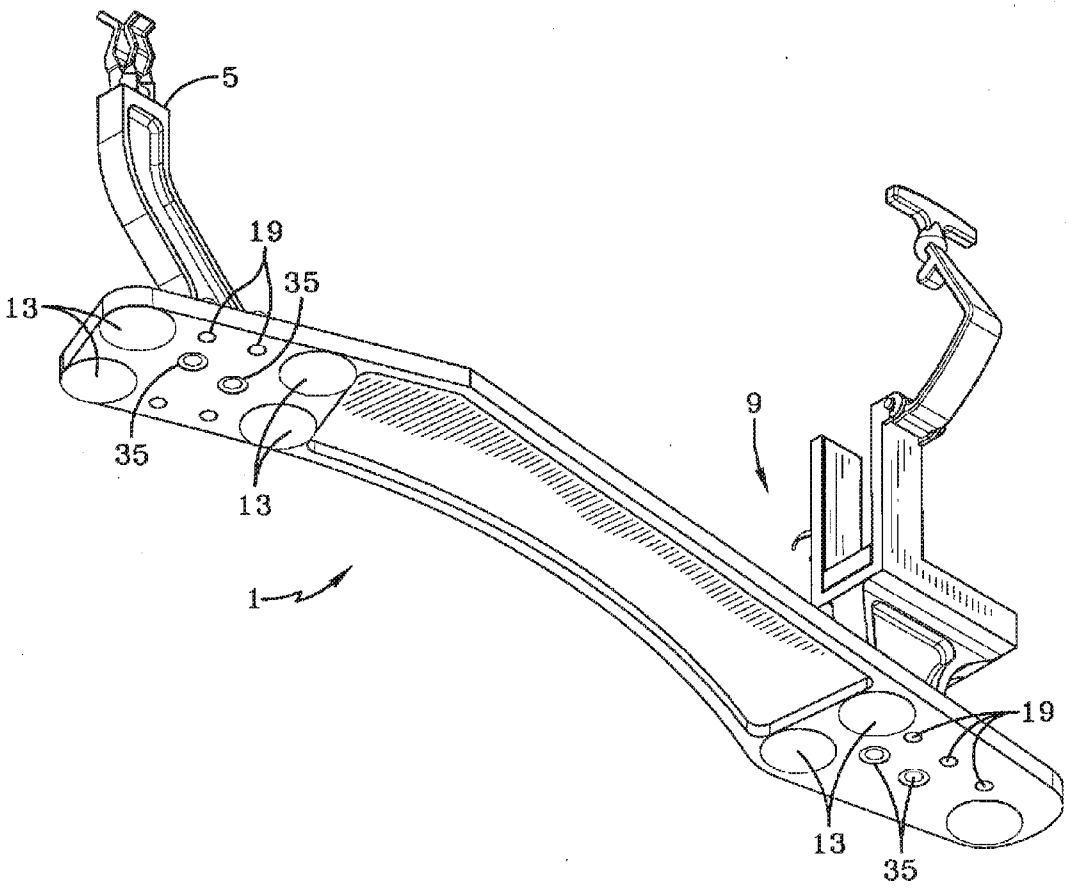

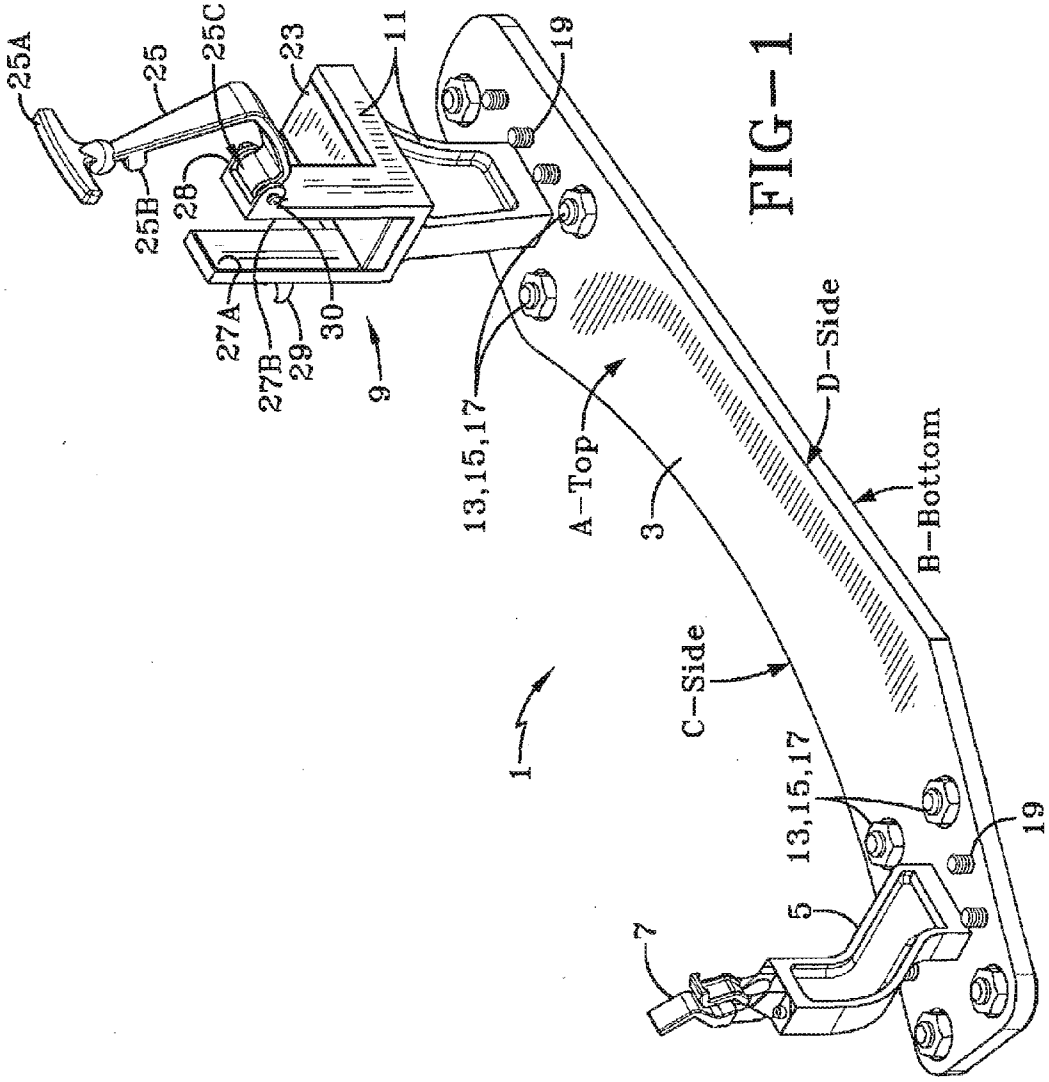
25A
25
25C
23
11
19
25B
28
27A
27B
29
30
9
13,15,17
A-Top
3
D-Side
B-Bottom
C-Side
1
13,15,17
19
5
7

FIG-1

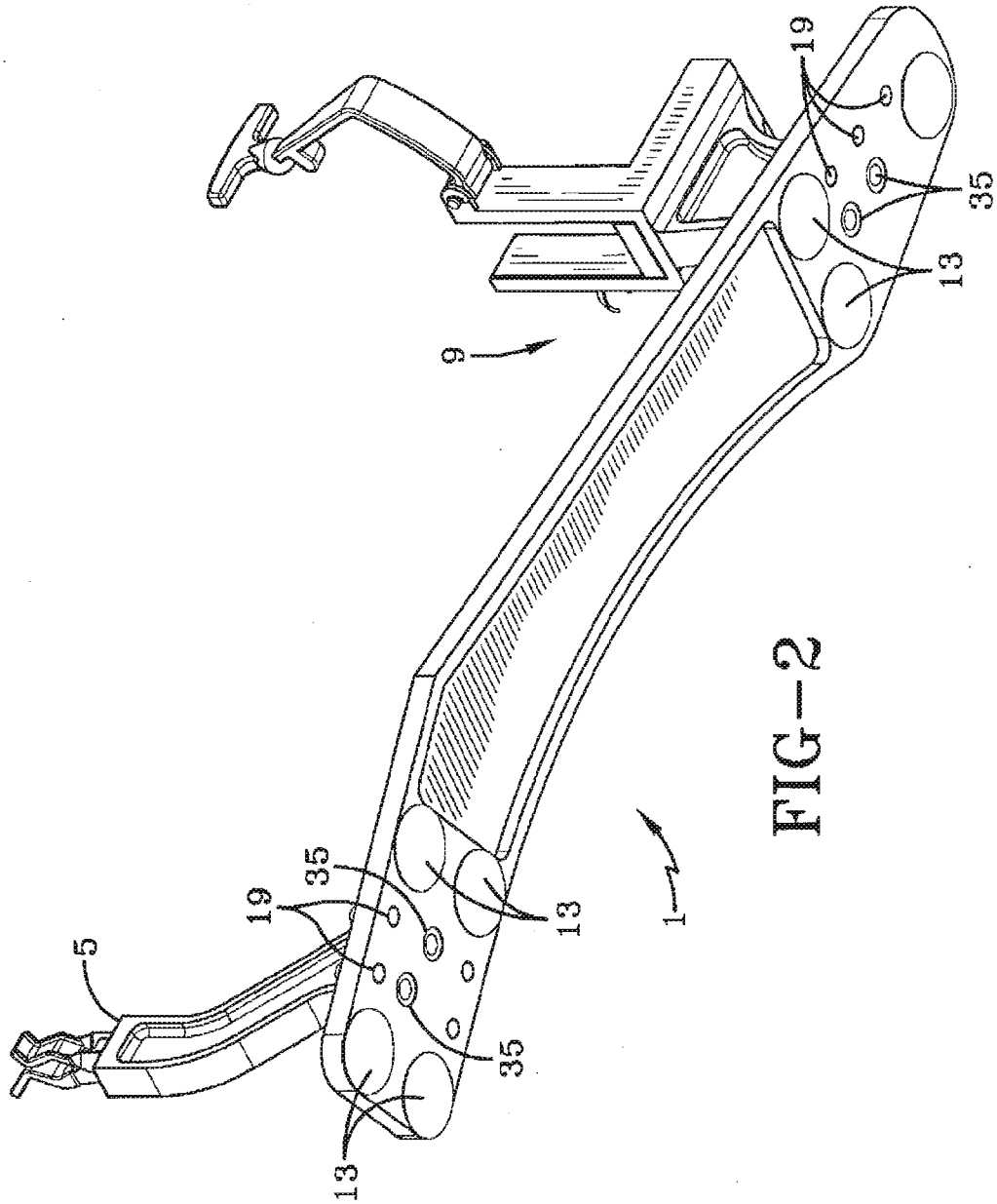

FIG-2

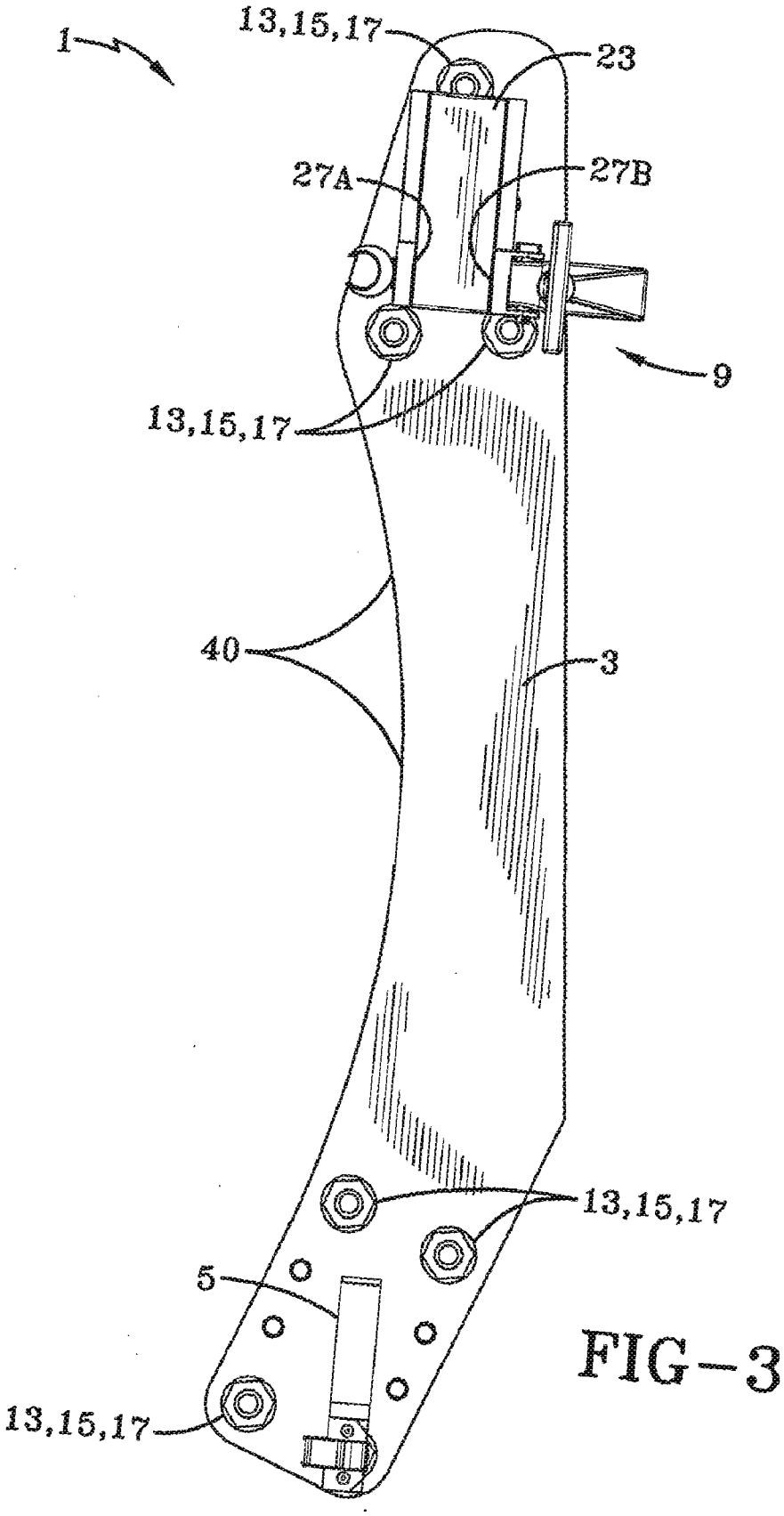

FIG-3

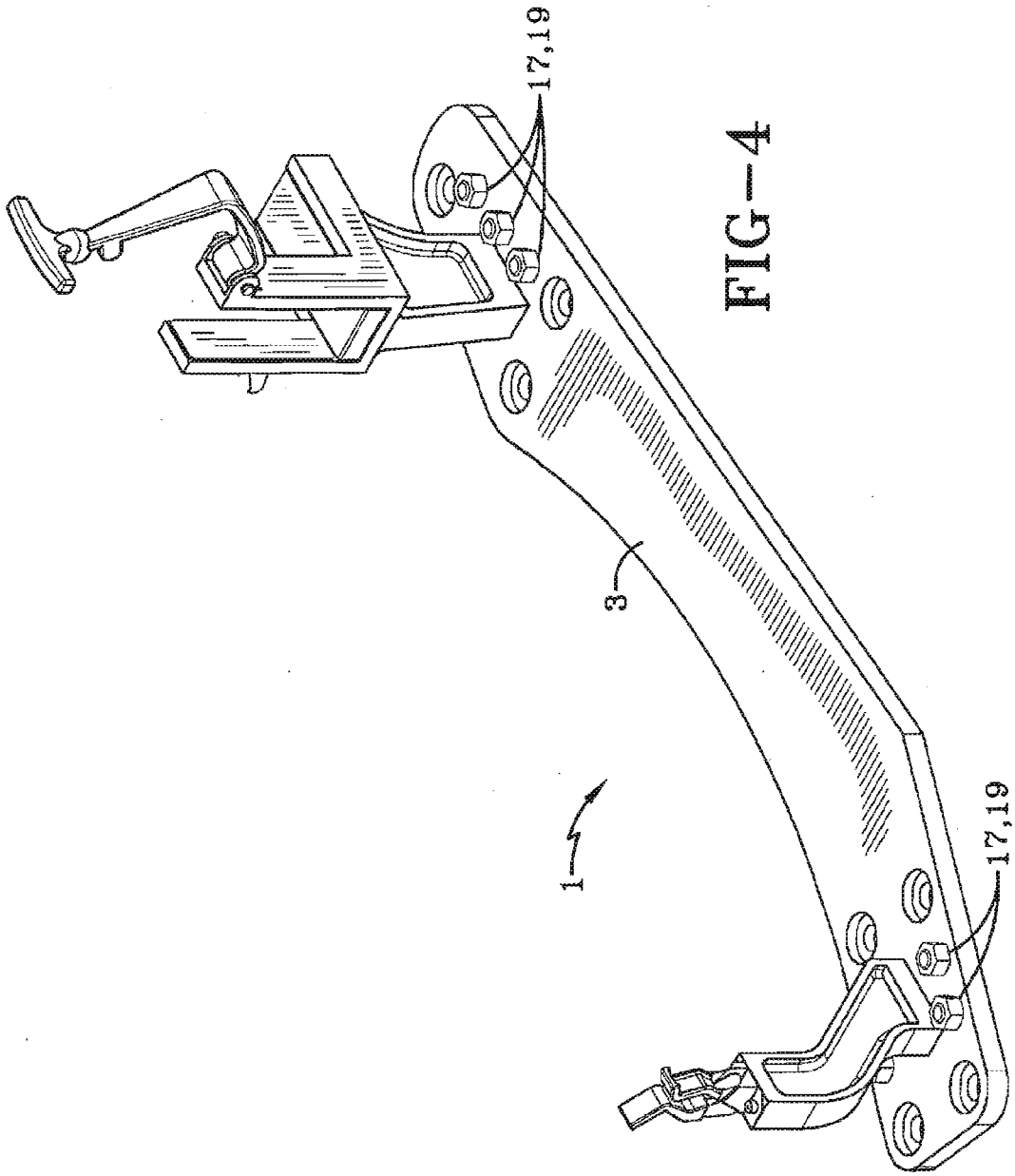

FIG-4

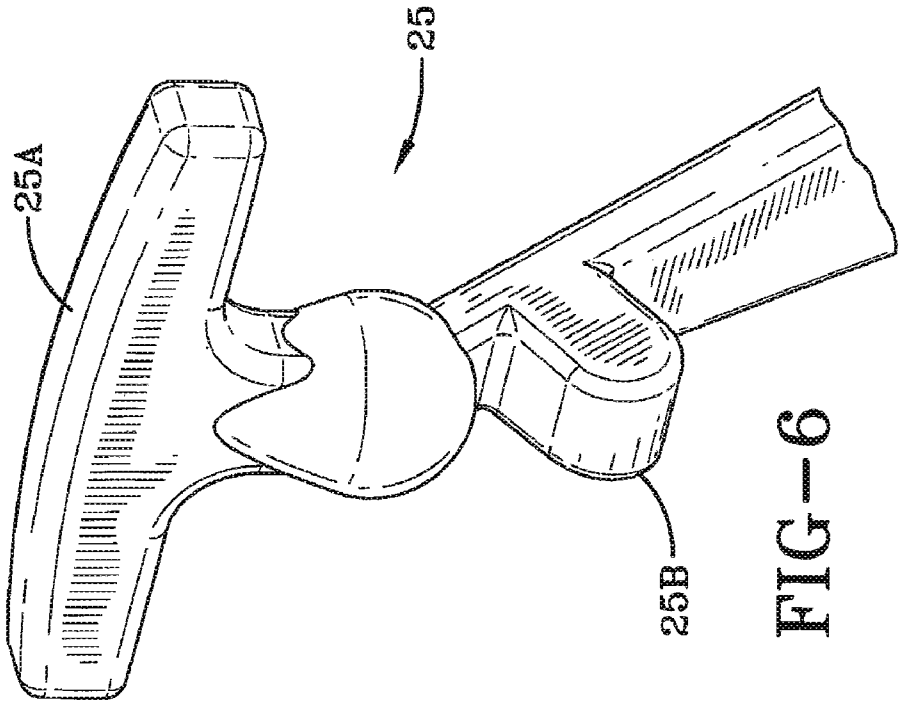

FIG-6

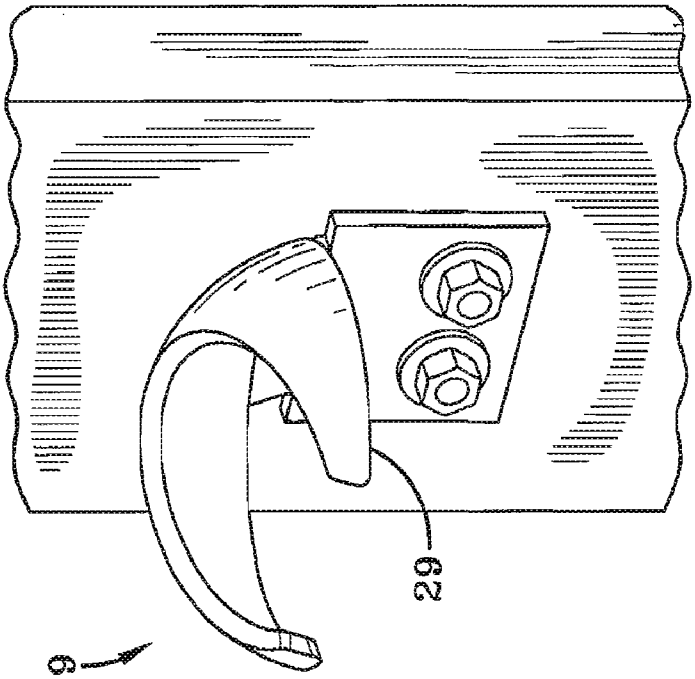

FIG-5

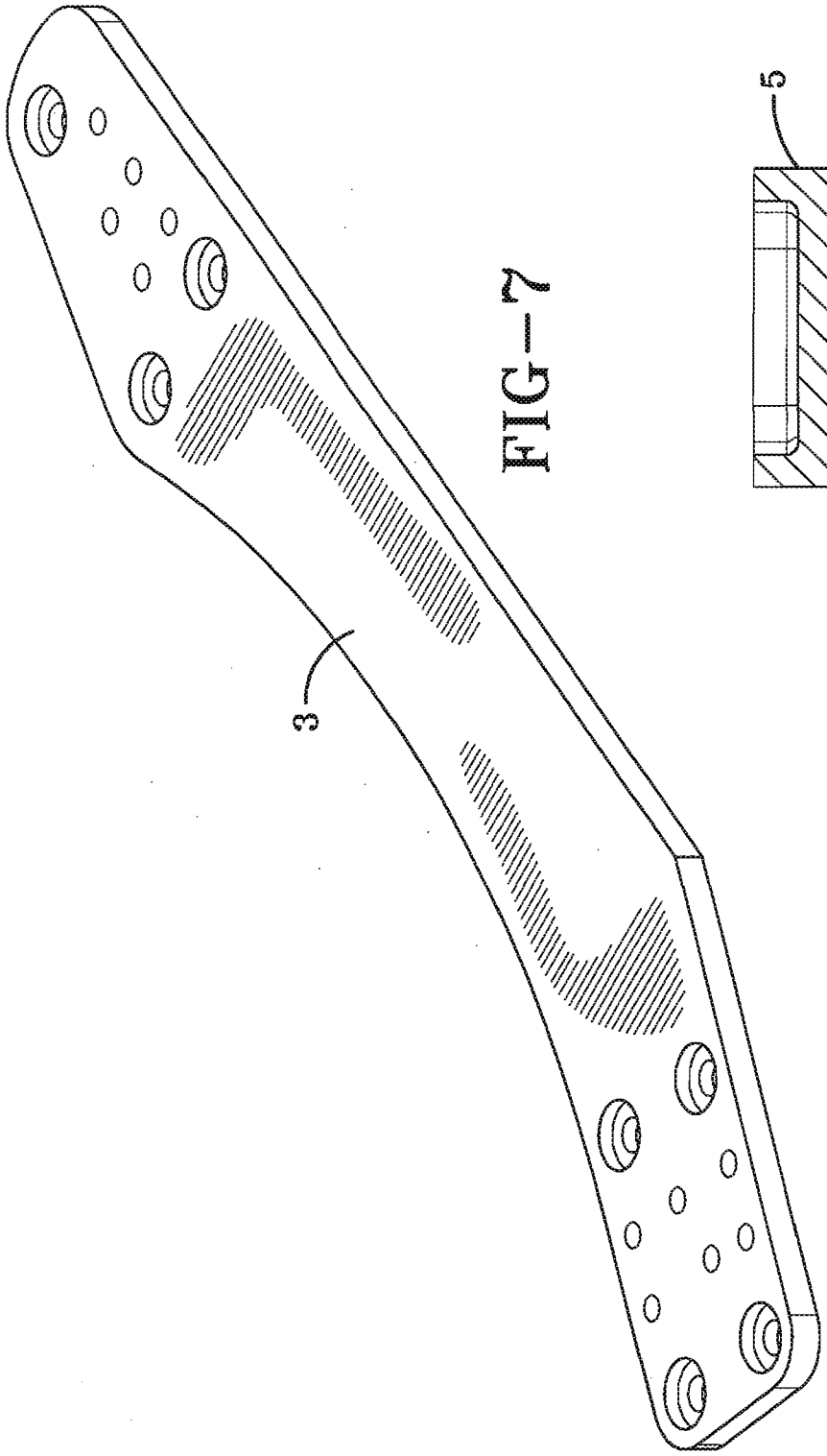

FIG—7

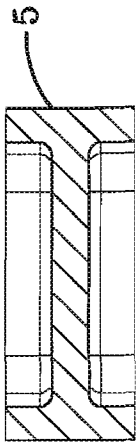

FIG—8

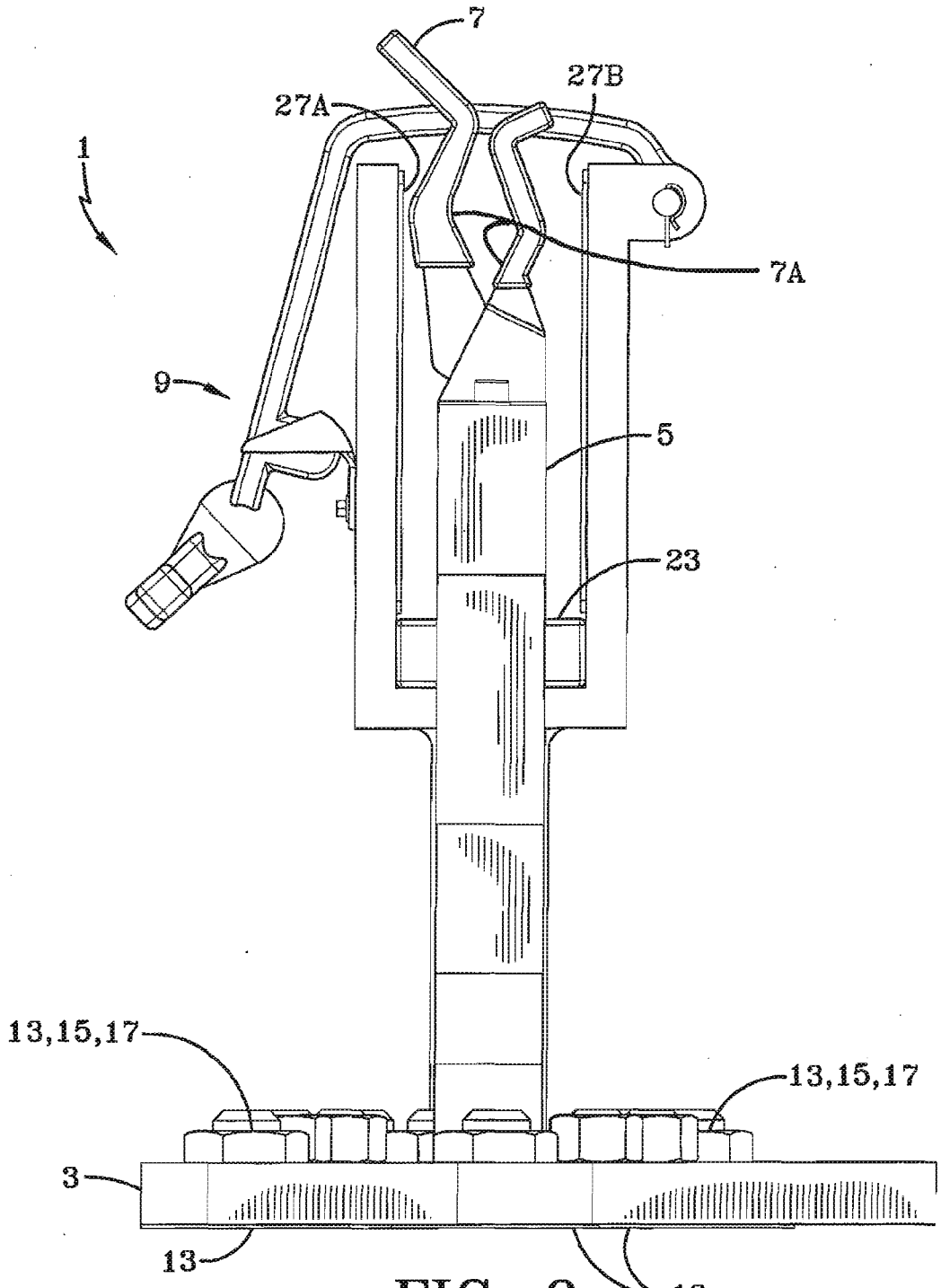

FIG-9

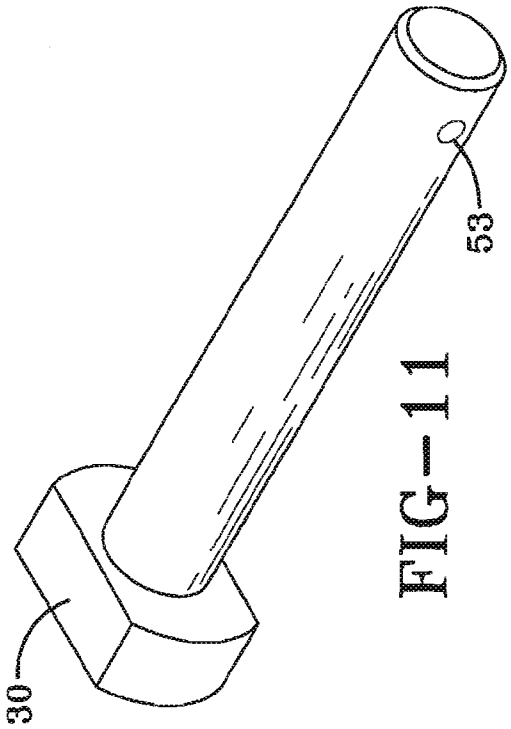

FIG-11

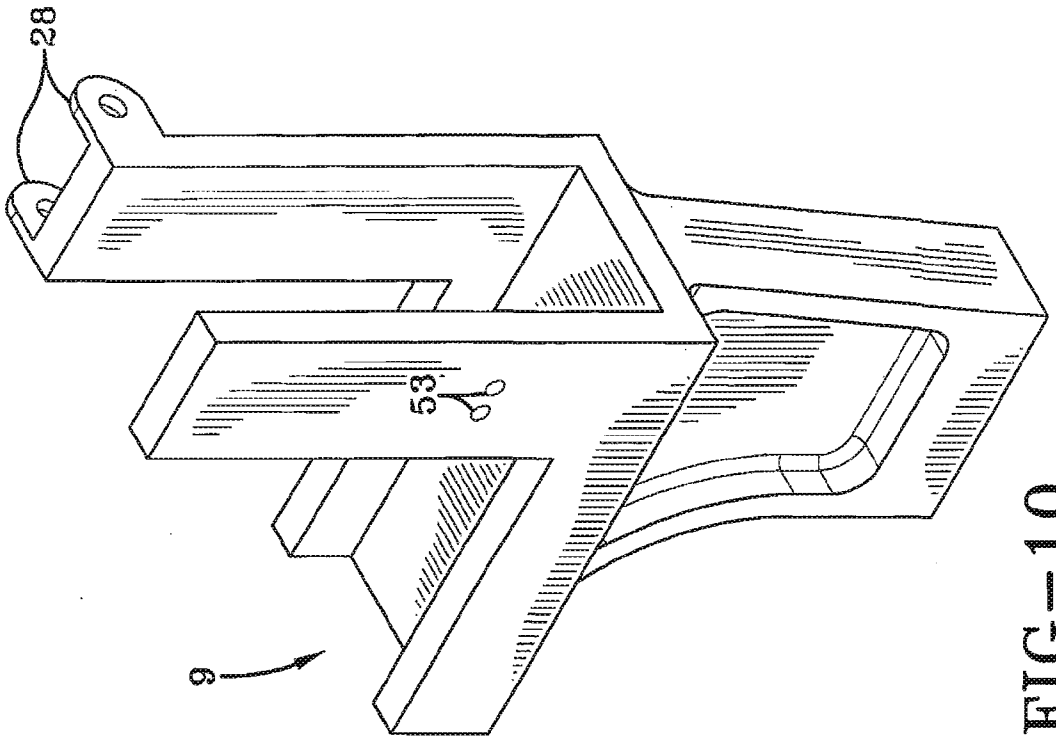

FIG-10

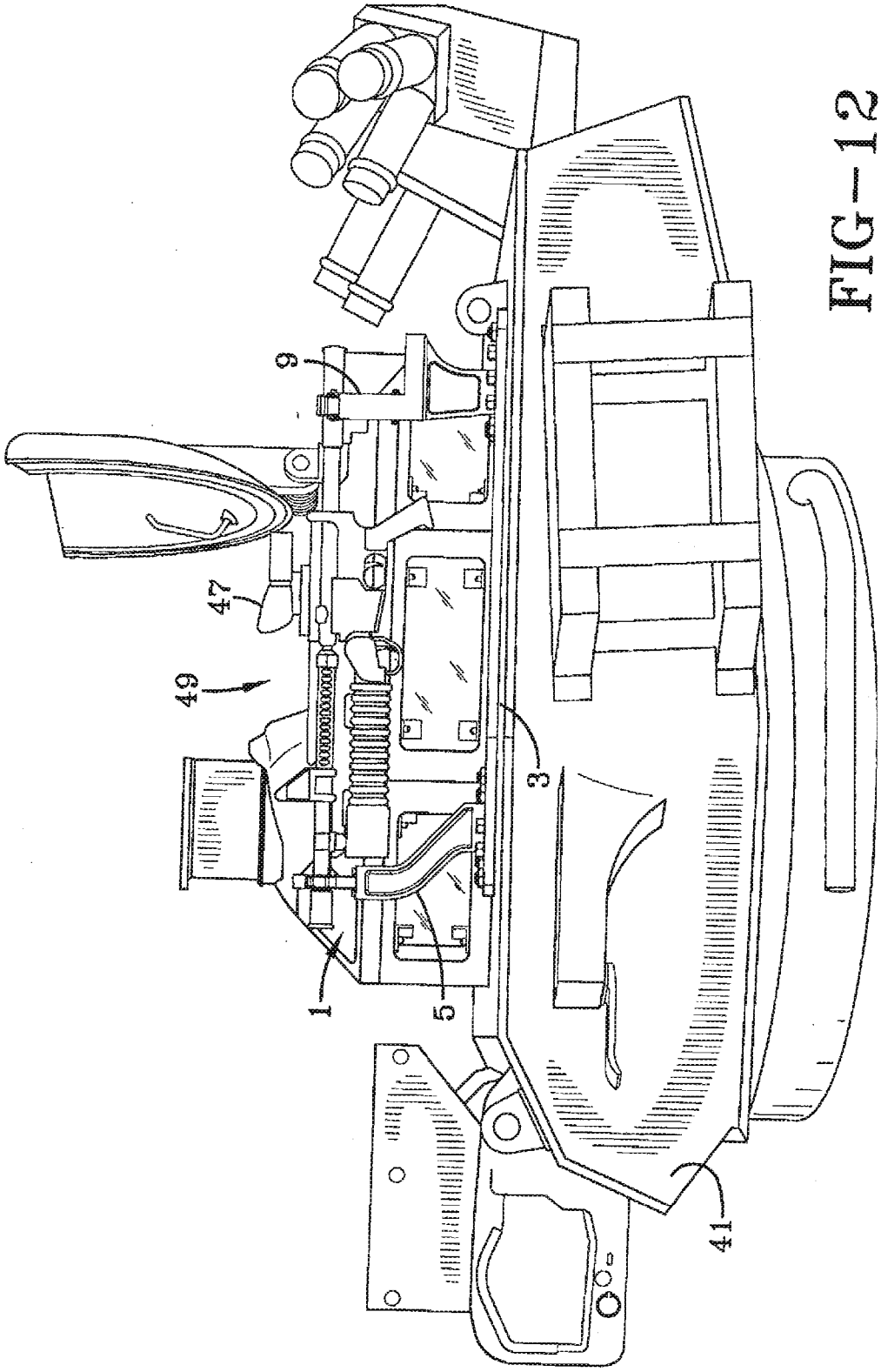

FIG-12

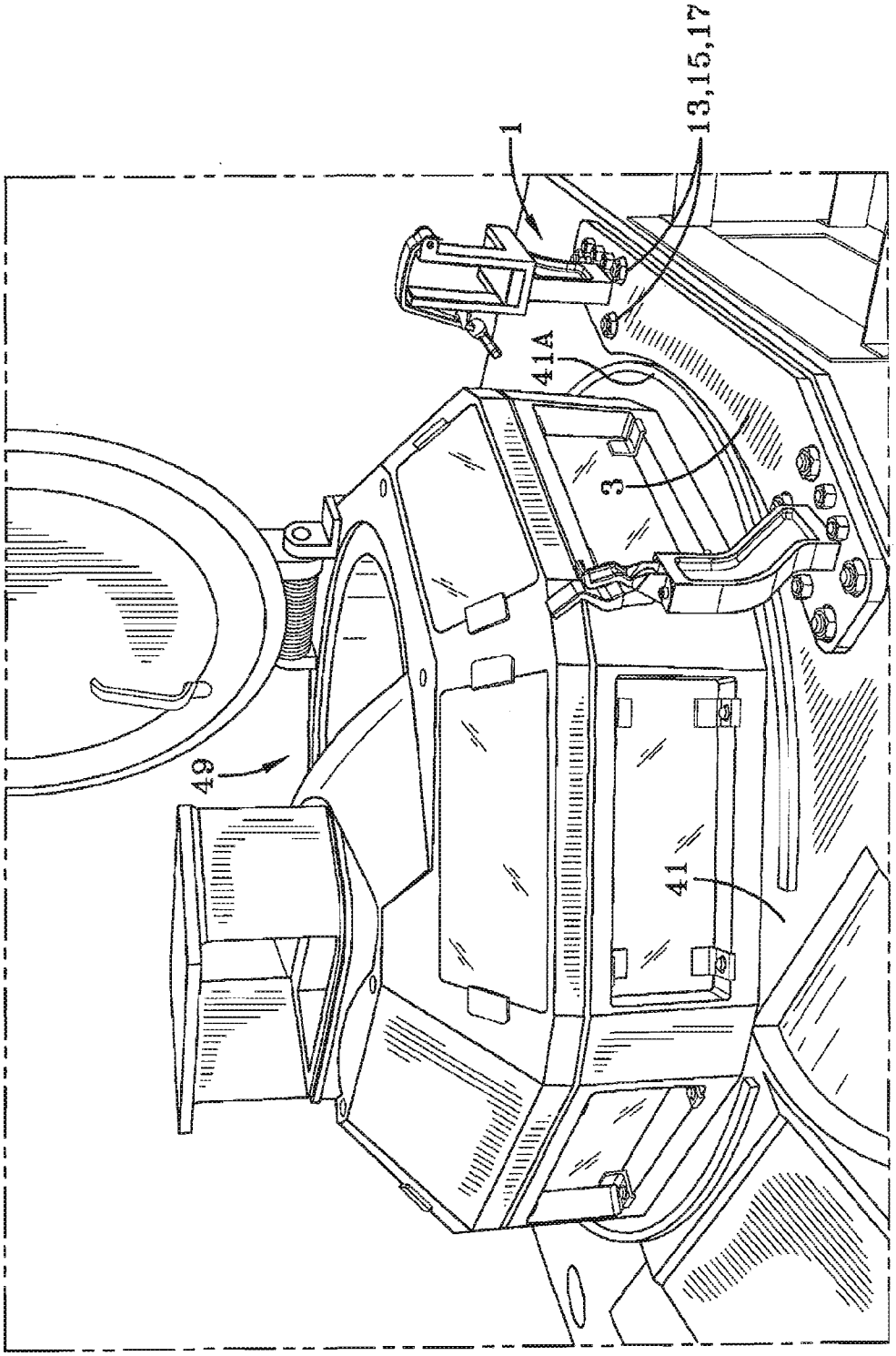

FIG-13

PORTABLE EQUIPMENT SYSTEM MOUNT

CROSS-REFERENCE TO RELATED APPLICATION

[0001] The present application claims priority to U.S. Provisional Patent Application Ser. No. 61/387,972, filed Sep. 29, 2010, the disclosure of which is expressly incorporated by reference herein.

STATEMENT REGARDING FEDERALLY SPONSORED RESEARCH OR DEVELOPMENT

[0002] The invention described herein includes contributions by one or more employees of the Department of the Navy made in performance of official duties and may be manufactured, used, licensed by or for the United States Government without payment of any royalties thereon.

FIELD OF THE INVENTION

[0003] The present invention relates to a system and apparatus for an improved mounting system for removable equipment items which are operable in areas with limited mounting surface area, are subject to substantial forces and impacts, and is capable of quickly receiving and releasing an item which is used in conjunction with the invention.

BACKGROUND OF THE INVENTION

[0004] A need arose for a stationary equipment mount to be designed and located atop a vehicle which was designed for traversing rough terrain and in proximity to blast or other hostile environments where a user will require rapid access to an equipment item such as a projectile firing system. In particular, a need existed for an improved equipment mount which was usable on a vehicle or turret system which included a hatch for a user to access the environment outside the vehicle or turret where the equipment item was located for ready access and use. A ruggedized equipment mounting system which positioned the user's equipment item in such a way that it maintained coupling with the equipment item in an orientation which was quickly accessible and usable for the user and was able to function on a vehicle with a stiff vehicle suspension system and traversal over various terrains including extremely rough terrain. Moreover, this mounting system was designed to operate on vehicles or structures which were required to maintain pressure or watertight integrity such as amphibious vehicles or pressurized vehicles.

[0005] Existing systems were unable to provide a desired mounting capability thus were susceptible to allowing equipment items to be dislodged and possibly falling off the vehicle. When a mounting failure occurred, a user was obliged to get down from the vehicle to retrieve the equipment item. During the retrieval process, the user was exposed to a dangerous situation where they are vulnerable to a hostile environment.

[0006] A number of design and prototyping efforts were conducted with a number of hardware designs attempted for use with unsatisfactory results. Testing and design efforts included using equipment replicas with a variety of potential design efforts to ascertain usability to address the need and problems giving rise to this invention. A variety of problems were encountered in attempting to create a space constrained mounting footprint which positioned the equipment item in a position which was quickly accessible to a user as well as capable of avoiding a variety of structural failures in environments where the mounting system would operate.

[0007] Accordingly, a new mounting system which was usable under the above described conditions was needed as such a capability did not exist.

SUMMARY OF THE INVENTION

[0008] A mounting system is provided having a base plate, multiple mounting armatures adapted to releasably hold a man-portable equipment item, and non-invasive fasteners for attaching to a structure without damaging the structure. The non-invasive fasteners can include adhesive bonded fasteners which couple to a structure without damaging the structure and permit attachment and removal of the mounting system. The base plate and mounting armatures are designed to minimize mounting footprint and orient the man-portable equipment item in relation to a user structure or aperture such as a turret, egress point, portal, or other structure which requires a user to pass through a structure and have immediate access to the man-portable equipment item. For example, an exemplary embodiment of the invention can position a man-portable user equipment item is in proximity to a user hatch in a turret where the user has quick access to an equipment item.

BRIEF DESCRIPTION OF THE DRAWINGS

[0009] The detailed description of the drawings particularly refers to the accompanying figures in which:

[0010] FIG. **1** shows a isometric view of a mounting system in accordance with one embodiment of the invention;

[0011] FIG. **2** shows a perspective view of a lower portion of the FIG. **1** embodiment;

[0012] FIG. **3** shows a top view of an exemplary embodiment of the invention such as shown in FIG. **1**;

[0013] FIG. **4** shows an embodiment of the invention such as shown in FIG. **1** removed from a mounted position or in a stored position;

[0014] FIG. **5** shows one embodiment of a coupling mechanism for portion of a retaining mechanism used with an embodiment of the invention such as shown in FIG. **1**;

[0015] FIG. **6** shows one embodiment of a portion of retaining mechanism used with an embodiment of the invention such as shown in FIG. **1**;

[0016] FIG. **7** shows a perspective view of a base plate such as used in an embodiment of the invention as shown in FIG. **1**;

[0017] FIG. **8** shows a cross sectional view of a mounting armature or extension used with on embodiment of the invention such as shown in FIG. **1**;

[0018] FIG. **9** shows a front view of the embodiment of the invention shown in FIG. **1**;

[0019] FIG. **10** shows a perspective view of a rear support of a mounting system embodiment of the invention such as shown in FIG. **1**;

[0020] FIG. **11** shows a perspective view of a pin used with a retaining structure used in accordance with one embodiment of the invention such as shown in FIG. **1**;

[0021] FIG. **12** shows a side view of an embodiment of the invention such as shown in FIG. **1** attached to a turret structure having a hatch structure; and

[0022] FIG. **13** shows a perspective view of the hatch structure with an embodiment of the invention such as shown in FIG. **12**.

DETAILED DESCRIPTION OF THE DRAWINGS

[0023] The embodiments of the invention described herein are not intended to be exhaustive or to limit the invention to precise forms disclosed. Rather, the embodiments selected for description have been chosen to enable one skilled in the art to practice the invention.

[0024] Referring to FIG. **1**, a perspective isometric top view on an embodiment of the invention is shown. A mounting or base plate **3** is provided having a top side A and a bottom side B formed with a curving side C which permits the mounting system **1** to be positioned closely to an opening or aperture in a vehicle or structure. The base plate **3** receives and mounts a front support assembly or first mounting structure **5**, and a rear support assembly or second mounting structure **9** on top side A of the base plate **3**.

[0025] The front support assembly **5** is formed with a longitudinal member which extends approximately diagonally from where it mounts on the base plate **3** so the mounting point with the base plate **3** is underneath an equipment item (not shown) which the mounting system **1** receives. Thus, the laterally displacing (e.g., diagonal form) of the front support assembly **5** reduces the size of the base plate **3** by the distance from where top of the front support assembly **5** is formed to where the lower section of the front support assembly couples with the base plate **3**. In other words, the approximately diagonal/curved form of the front support assembly permits a shortening of the base plate **3** thus a reduction of coupling area between the mounting system **1** and a structure or vehicle which the mounting system **1** rests upon. This reduction of mounting or coupling area permits mounting of larger systems on areas where little mounting area or footprint is available.

[0026] One embodiment of the front support assembly **5** is made from 6061-T6 aluminum alloy however another material can be used that is selected based on kinetic force expected to be applied to the mounting system **1**, an equipment item which is to be mounted, as well as attributes of a hostile environment the mounting system **1** is expected to operate within.

[0027] In this embodiment, holes are drilled on opposing ends of the longitudinal member making up the front support assembly **5** for receiving fastener structures which couple the front support assembly **5** to a quick release mechanism **7** on one end and base plate **3**. This embodiment of the front support assembly **5** has the longitudinal member formed with an I-beam type cross section form (e.g., see FIGS. **8** and **9**) which provides requisite strength and reduces weight. An alternative embodiment can include a plate or rectangular structure forming the longitudinal portion of the front support assembly **5** which has holes cut in the plate or structure's body to reduce weight but still provide required stiffness and ability to maintain a removable equipment item in a fixed position while the mounting system **1** is subjected to a variety of forces. The forces affecting the mounting system **1** can include lateral, vertical, longitudinal forces, yaw forces, etc created either by environmental factors or movement of a structure to which the invention is attached.

[0028] The front support assembly **5** has a quick release mechanism **7** attached to an end of the front support assembly **5** opposite the end which is coupled to the base plate **3**. In this embodiment, the quick release mechanism is a clamping mechanism, such as a spring clamp **7** adapted to receive a barrel of a projectile firing system such as a rifle (not shown). The quick release mechanism in this embodiment permits an equipment item to be pulled upwards and away from the mounting system **1** after application of force sufficient to dislocate the spring clamp **7**. The retaining force applied by the quick release mechanism **7** is designed based on the range of motion that a user would have accessing a mounted equipment item from an aperture such as a turret in an armored vehicle, ship, spacecraft, aircraft, etc.

[0029] The height of a top section of the front support assembly **5** from the base plate **3** is determined based on the equipment to be mounted, the structure which the mounting system **1** is attached to, and a user orientation or position with regard to the equipment item that the mounting system **1** releasably receives and holds. In this example, the height of a top section of the front support assembly **5** which receives the quick release mechanism **7** is between seven and ten inches as measured from the base plate **3**. The lateral offset of the top portion of the front support assembly **5** which couples to the quick release mechanism from the bottom portion of the front support assembly **5** which couples to the base plate **3** in this embodiment is approximately six to seven inches. More or less lateral offset between the top and bottom sections of the front support assembly **5** that respectively couple to a quick release **7** (e.g., spring clamp) and base plate **3** may be desirable given the shape and length of an equipment item which is to be placed into the mounting system **1**. The offset dimensions are determined based on an objective of minimizing a mounting footprint of the mounting system **1** while still providing sufficient positioning to permit quick, ergonomic, and/or natural access to the equipment item by a user.

[0030] The front support assembly **5** can also include an interface structure or cushion **7A** shown in FIG. **9** placed between and on the floor of the spring clamp or quick release mechanism **7**. The front support system cushion **7A** is provided to dampen vibration or movement of an equipment item in the clamp or quick release mechanism **7** which holds a section of an equipment item (e.g., rifle barrel in this example).

[0031] The rear support assembly **9** is designed to firmly receive and releasably release another section of an equipment item the mounting system **1** is designed to receive. The shape of both the front and rear support assemblies **5**, **9** are adapted to the shape of the item to be received by the mounting system **1**. Note that the term front and rear with regard to front and rear support assemblies **5**, **9** are used for convenience purposes; multiple mounts in a variety of configurations can be used which provide the requisite stability, stability, and accessibility in mounting and dismounting an equipment item positioned in proximity to a user's orientation and positioning in question e.g., in a turret or other aperture or other positioning/seating arrangement.

[0032] In this embodiment, the rear support assembly **9** receives a different section of an equipment item which is coupled to the front support assembly **5**. For example, rear support assembly **9** is formed with a structure that couples to the base plate **3**, and an opposing end section that has an equipment item stabilization structure/retaining frame comprising a U-shaped interface structure with multiple cushions

23, 27A, 27B configured to receive an equipment item. In this example, the cushions comprise a lower rest cushion **23** (e.g., rifle butt stock rest) supported by a protrusion section forming a planar structure or base and adapted to conform and cushion a bottom section of an equipment item (e.g., a rifle butt stock), as well as two side rest cushions **27**A, **27**B (e.g., rifle butt stock side cushions) which are coupled to side walls (i.e., first and second attachment sections) that extend laterally in the U-shape receiving structure. The receiving structure can alternatively have a single sidewall and a single side rest cushion **27**B. The lower and side cushions **23**, **27**A/**27**B in this embodiment are made from Sorbothane® material or Santoprene™ rubber which has an approximate durometer of 55A. The front cushion **7**A (FIG. **9**) can also be made from the same materials as the other cushions **23**, **27**A, **27**B.

[0033] The rear support assembly **9** further includes a coupling structure or repositionable equipment item retaining system **25** (e.g., a stretchable or elastic strap) that is pulled over the top of an equipment item (e.g., rifle butt stock), and attaches on one end to a coupling mechanism **29** (e.g., half spherical/cup/hook, hereinafter referred to as "strap hook"). The strap **25** is adapted to produce a plurality of retaining forces along a plurality of axes on the equipment item received within cushions **23**, **27**A, **27**B of the stabilization structure. In this embodiment, the strap hook **29** is formed in a half circle/sphere/cup form which is coupled with and extends laterally from the side of the rear support assembly **9**. The strap hook **29** in this embodiment is extruded to form a half-cup form with a portion of the side/top cut away with the cup form facing substantially towards a plane formed by the base plate **3** for receiving a spherically shaped portion of the strap **25**. See FIG. **5** for an example of the strap hook **29** described above. See FIG. **6** for an example of the spherical section in the strap **25** described above which fits into the FIG. **6** strap hook.

[0034] The example in FIG. **1** uses a flexible/stretchable strap as the coupling mechanism **25** which has an integral handle **25**A at one end of the strap **25** and an approximately spherical section **25**B formed near the handle **25**A. The handle **25**A is formed on one end of the strap **25** with a coupling section **25**C on the other end which attaches the strap **25** to the rear support assembly **9** using a strap pin **30**. The strap pin **30** and strap coupling section **25**C are inserted into a top section of the rear support assembly **9** that is on an opposite side of the rear support assembly **9** than the strap hook **29**. See FIG. **6** for an example of the spherical section **25**B and handle **25**A of the strap **25** in this embodiment. An exemplary embodiment of the strap pin **30** is shown in FIG. **11** and is can be made from stainless steel.

[0035] A user can pull/stretch the strap **25** in order to extend the spherical section **25**B in the strap **25** past the strap hook **29** and into the center of the half circle section of the strap hook **29**; then a user allows the strap **25** to retract in order to then place the spherical section **25**B of the strap **25** into the strap hook section **29** to secure strap **25** in place. To remove an equipment item, a user then pulls the strap **25** down and away from the strap hook **29** then pulls the strap **25** away from the equipment item e.g., rifle butt. The strap **25** in this embodiment can be made from natural rubber but can also be made from ethylene propylene diene monomer (EPDM) rubber as well for moderate to hot climates and to better resist ultraviolet degradation. A retractable ribbon, cable, or strap as well as other forms or types of elastic strands/cable can also be used as an alternative to the embodiment described herein.

[0036] The front and rear support assemblies **5**, **9** are coupled to the base plate **3** with screws or other types of fasteners that go through the base plate **3** and couple into the support assemblies **5**, **9**. A thread locking compound or structure can be used or applied to the threads in the support assemblies or into fasteners which are used to couple the support assemblies **5**, **9** to the base plate **3**. Thread lock structures or compounds may provide extra gripping power on fasteners so that vibrations and collisions do not loosen the fasteners (e.g., lock washers **35** in FIG. **2**).

[0037] The base plate **3** is held to a structure (not shown) upon which the mounting system **1** is mounted (e.g., a vehicle), with nylon insert nuts **17** and washers **15** that attach to non-invasive fasteners, illustratively adhesive bonded fasteners **13**. Adhesive bonded fasteners **13** can comprise metal, plastic, fiberglass, carbon composite, etc. studs which have a base section on one end (e.g., see FIG. **2**) and a threaded stud/protrusion that rises from the base section. The base section of the adhesive bonded fasteners **13** is adhered to an underlying structure (not shown, e.g., a vehicle surface) and nuts **17** and washers **15** are screwed/placed on the threaded section of the adhesive bonded fastener **13** to permit installation and later removal. Increasing the size of the base of the adhesive bonded fasteners **13** increases the amount of force that can be applied to the fasteners without detachment of the fasteners from a receiving structure the fasteners are attached to. Thus, varying sizes of adhesive bonded fasteners may need to be used based on an analysis of kinematic forces applied to the mounting system by environmental factors or movement of the receiving structure the mounting system is attached to. Different adhesive fastener stud materials and adhesives may also be selected based on anticipated loading, environmental factors e.g., blast damage events, and applied kinematic forces of the mounting system.

[0038] Adhesive bonded fasteners **13** can be applied to a surface of a structure (e.g., see FIGS. **12**, **13**) (e.g., a vehicle top) using an installation device that aligns and holds the adhesive bonded fastener in position and applies a predetermined or controlled pressure to the fastener while the adhesive bonding material cures. After installation of the adhesive bonded fasteners is completed, the installation device is removed and the mounting system **1** is coupled to the adhesive bonded fasteners **13** using nylon insert nuts **17** and washers **15**. The adhesive bonded fasteners avoid a need for drilling, welding or otherwise damaging a structure the mounting system **1** is to be mounted upon and also provides strong, leakproof, and corrosion resistant coupling with a underlying structure the mounting system **1** is attached to. Adhesives which are used with the adhesive bonded fasteners **13** can include acrylic, bismaleimide, and epoxy adhesives.

[0039] Examples of adhesive bonded fasteners use with the invention include using threaded set screws or studs attached to a flat plate. Double sided tape can also be used in addition to liquid or paste adhesives. The installation tool holds the fastener securely in place until the adhesive is cured. A special hole-pattern that is tightly spaced together is needed for this exemplary embodiment and application. In particular, the exemplary mounting holes in the mounting system **1** base plate **3** are used to locate the adhesive bonded fasteners on a structure upon which the mounting system **1** is coupled with during installation. Testing was performed to verify the attachment strength of the adhesive bonded fasteners. The large surface areas of the fasteners in combination with

proper surface preparation and structural acrylic adhesive proved to sufficient for holding the exemplary embodiment in place.

[0040] Set screws **19** are coupled to the base plate **3** for use to store washers **15** and nylon insert nuts **17** when the mounting system **1** is not mounted on a structure e.g., a vehicle.

[0041] FIG. **2** shows the mounting system **1** embodiment of FIG. **1** from a bottom isometric perspective. A lower section of base plate **3** (Side B from FIG. **1**) is shown with the bottom portion of the adhesive bonded fasteners **13** installed in base plate **3** which are adhesively bonded to a structure (not shown) when such system is actually installed on a receiving structure such as a vehicle upper surface (e.g., see FIGS. **12**, **13**). A view of set screws **19** are shown installed in the lower face of base plate **3**. An installed view of the fasteners **35** which couple the front and rear support assemblies **5**, **9** to base plate **3** are also shown in an installed position.

[0042] FIG. **3** shows a top view of the mounting system **1** embodiment shown in FIG. **1**. A top view of base plate **3** is shown with a curved section **40** (i.e., Side C in FIG. **1**) which is designed to fit the mounting system **1** in close proximity to an arcuate, aperture structure, e.g., a turret on an armored vehicle, and thereby reduce mounting area footprint. This curved section **40** of base plate **3** permits mounting of an equipment item closer to such an aperture or user accessible structure. An entire base plate **3** can be curved or merely one side of it can be curved or shaped based on an underlying or adjacent structure's geometry or based on another design consideration related to a user or user aperture/access needs. The base plate **3** is also shown with a top view of the nylon insert nuts **17** and washers **15** that attach to the adhesive bonded fasteners **13**.

[0043] FIG. **4** illustrates the mounting system **1** as in FIG. **1** for receiving nuts **17** and washers (not shown) installed on set screws **19**. This figure shows an orientation or configuration that the mounting system **1** would be after removal from the adhesive bonded fasteners **13** (not shown).

[0044] FIG. **5** shows a perspective view of the FIG. **1** strap hook **29** mounted on rear support assembly **9**.

[0045] FIG. **6** shows a perspective view of strap **25** with a detail view of the strap handle **25**A and the strap spherical section **25**B which engages the strap hook **29**.

[0046] FIG. **7** shows a perspective view of the FIG. **1** base plate **3** with the drilled holes for set screws **19**, fasteners **35**, and adhesive bonded fasteners **13**.

[0047] FIG. **8** shows a cross-sectional view of the front support assembly **5** as shown in FIG. **1**. The front support assembly **5** cross-section shows an I-beam shape to the cross section which provides required strength and provides weight reduction for the mounting system **1**.

[0048] FIG. **9** shows a front view of the FIG. **1** mounting system **1** as it would be seen installed on a structure or vehicle (FIGS. **12** and **13**). Front support assembly **5** is shown with spring clamp **7** on top of the front support assembly **5**. A cushion **7**A is shown between the arms of spring clamp **7** in the area where the clamp **7** couples with the top of the body of the front support assembly **5**. The sides of the rear support assembly **9** are shown extending on either side of the front support assembly **5** with rear support assembly **9**, side cushions **27**A, **27**B and lower cushion **23** shown. The lower part of the adhesive bonded fasteners **13** are also shown underneath the base plate **3** as they would be viewed in an installed position.

[0049] FIG. **10** shows a perspective view of the FIG. **1** rear support assembly **9** prior to installation onto the base plate **3** and without other installed components. Mounting holes **52** for the strap hook **29** are shown as well as the mounting holes and section **28** in rear support assembly **9** where strap **25** is attached with the strap pin **30**.

[0050] FIG. **11** shows the strap pin **30** with a retaining clip hole **53** that is used to secure the strap pin in position after installation using a cotter pin or other similar retainer device (not shown).

[0051] FIG. **12** shows a side view of an armored vehicle turret **41** with an embodiment of the mounting system invention **1** such as shown in FIG. **1**. Base plate **3** is shown with front and rear support assemblies **5**, **9** coupled to the armored vehicle turret **41** next to a user access hatch **49**.

[0052] FIG. **13** shows a perspective view of the armored vehicle turret **41** shown in FIG. **12**. Base plate **3** is shown coupled to an outer surface of the turret **41**, with the curved section **40** of base plate **3** fitted to conform with a curved section **41**A of the turret **41** (e.g., the curved section **40** of base plate **3** is further shown in FIG. **3**). Front and rear support assemblies **5**, **9** are shown coupled to the base plate **3** with an equipment item (i.e., a rifle **47**) installed in the mounting system **1** with the rifle barrel in the spring clamps **7** of front support assembly **5** and rifle butt inserted into the rear support assembly **9**.

[0053] Regarding utilization of the mounting system **1** such as shown in FIG. **1**, after the mounting system **1** is installed on a vehicle, e.g., a turret surface, an equipment item (e.g., a rifle) can be loaded in the mounting system **1** by snapping a front portion into the quick release structure, e.g., spring clamp **7**, as shown, for example, in FIG. **13**. Stretching the retaining strap **25** over the top of the gun and placing the spherical section **25**B into the strap hook **29** forces a portion of the equipment item into the rear support assembly **9**. This squeezes the equipment item between strap **25** and cushion **23** creating a very strong hold on the equipment item (e.g., gun butt stock). The removal of the mounted equipment item is opposite of the installation.

[0054] An embodiment of the invention, such as shown in FIG. **1**, weighs approximately 5 pounds and is a negligible addition to a structure the invention is attached to. One advantage of the invention is that once mounted, it can be easily removed with standard tools. Additionally, the simple mounting scheme allows for easy replacement if the unit becomes damaged. The rear mounting strap and forward quick release, e.g., mounting clip, allow for quick removal an equipment item from the invention.

[0055] Because of its location in proximity to a user access aperture, e.g., on a left side of a turret, any mishandling of the equipment item while reaching for it would cause the item to simply fall on top of the user access aperture, e.g. turret, or other part of the vehicle or structure and not down the front or off the side as was the case with existing systems.

[0056] Further, depending on the mission and specific user, there are numerous equipment items or configurations including lasers, flashlights, and payload launchers which can be used with the invention. The system's mounting base can be modified to permit use with other types of vehicles or structures with user apertures. Modifications to the geometry of the structure which receives an equipment item can compactly accommodate a wide variety of portable and human repositionable systems.

[0057] This invention can be used with fixed sites, vehicles, ships, aircraft, spacecraft, or other mobile structures having user apertures. Examples of vehicles with apertures or turrets can include, for example, tanks, armored personal carriers (APC) and all terrain vehicles. An adaption of this invention can also be used on law enforcement vehicles in hostile cities or countries that require a higher powered weapon, hose system, laser, or man portable/repositionable/mobile system is at the ready in proximity to a user in a vehicle or fixed site.

[0058] Other applications can include oil well drilling systems where tools or equipment must be at a ready position where a user is positioned to take a required urgent or emergency action. An embodiment of the mounting system invention can be placed on aircraft such as helicopters as well as ships e.g., harpoon system, firefighting hose, animal snares for large game, etc.

[0059] Other alternative embodiments can include substituting sections of the rear support structure with a variety of adjustable jaws such as spring loaded jaws which can substitute for the strap system.

[0060] Additional embodiments can add a locking feature which impedes removal by unauthorized personnel such a by adding a lock mechanism. An alarm system can also be added to alert users of tampering with equipment items in the mounting system. A variety of alarm systems can be utilized including pressure switches, motion sensors, light sensors, or magnetic switches which can be positioned on the mounting system. Remote locking and unlocking systems can be added to the invention as well which permits a user to remotely secure or make an equipment item available for quick access.

[0061] The front support assembly can be designed to be extendable via a variety of means such as a telescoping structure, longitudinal members which can be substituted with quick release pins on either end of the front support assembly, a lockable swing arm which has a pivoting mechanism on either end which permits rotation of the front support assembly along an arc in parallel with the base plate **3** with the mounting section permitting locking in place and the clamp design to rotate to provide a desired orientation to an equipment item being mounted. Pins, adjustable friction locks, or other means can be used to provide the locking effect for the front support structure. The front support structure can also be mounted such that it swings laterally or sideways to lie flat or in a position rather than substantially perpendicular to a surface that the mounting system **1** is coupled with. An alternative embodiment of the invention can thus be mounted on a side section of an underlying structure rather than a top section. One embodiment of the side swinging embodiment can be provided via a hinge structure on the side of the base plate **3**. Additionally, a second plate can be coupled to the base plate **3** which is coupled to the front and rear support assemblies **5**, **9**.

[0062] The system can be designed to couple to a motorized system which can position an embodiment of the invention as desired by means of a remote control. This motorized version can attach an actuator system or arm to a section of the mounting system **1** to position it as desired. A control system would be placed in a remote location and can be coupled wirelessly or via a wire system. A control system including a power source or power controller as well as an input/output system can be coupled to the system to permit operation of the system.

[0063] The latching systems e.g., clamp **7** and strap **25**/strap hook **29** combination can individually or both be replaced with an electromechanical control system which permits remote actuation of the quick release or retention function such as if there was a robotic arm used in connection with the system. An input/output system which is coupled to a control mechanism can include wired connectivity, wireless connectivity, or other forms of communication such as induction fields, etc to communicate between a user and the alternative embodiment of the invention's latching control section.

[0064] An alternative embodiment of the invention can be designed to operate in hostile environments where a cover can be placed on or in proximity to a mounting system to protect an equipment item which has been mounted in the mounting system **1**. A cover can include clam shells that are on either side of a mounted equipment item which provide protection against environmental threats or ballistic shrapnel or other threats including chemical, sand or particulate, or other types of contaminants. The cover can be designed to permit a user to reach into a top aperture in the cover and pull a mounted equipment item out of the cover structure. A flexible or repositionable cover can be on top of the cover system that encloses an equipment item to permit a user to push their hand or hands into the access aperture then pull the equipment item out. The cover can be made out of flaps that overlap or a spring loaded cap which displaces when pushed aside or an equipment item is withdrawn from the mounting system **1**.

[0065] A series of sacrificial layers or membranes can be used as well which is designed to permit an equipment item to be pulled through the membrane or layer. One embodiment of this can have a serrated or alternating cut line placed in the membrane or layer which creates a weakness in the layer so when the equipment item is withdrawn the serrated portion cut into the layer/membrane permits a user to pull an equipment item through the membrane/layer with greater ease. An embodiment can include provision for replacement layers or membranes reapplied over an equipment item withdrawal aperture.

[0066] One or more flexible or spring loaded panels or cover sections can be used which accommodate movement between a closed position and an open position with the panels or cover sections moving upward, downward, laterally, or otherwise positionable to permit quick extraction of an equipment item stored in the mounting system **1**. The cover section can be made from materials which provide ballistic protection similar to ceramic panels which have Kevlar® coatings applied to distribute kinetic impacts laterally and prevent objects from impacting a stored equipment item.

[0067] In addition to an enclosing cover, a single protective panel can be used which is placed in a direction where a threat is most anticipated. For example, a kinetic or ballistic protection panel can be placed on one side of the mounting system **1** which faces a potential threat.

[0068] Although the invention has been described in detail with reference to certain preferred embodiments, variations and modifications exist within the spirit and scope of the invention as described and defined in the following claims.

1. A mounting system comprising:

a first plurality of fasteners, wherein said first plurality of fasteners comprise adhesive bonded fasteners each comprising a base portion, a first threaded protrusion, and a threaded nut which screws onto said threaded protrusion;

a base plate sized and dimensioned based on an available receiving structure footprint and material characteristics and is formed with a plurality of apertures adapted to receive said first plurality of fasteners;

a first mounting structure comprising a clamping mechanism and a first moveable equipment item mount interface structure coupled to said first mounting structure in proximity to or within said clamping mechanism, said clamping mechanism is adapted to releasably couple a removable item with said first mounting structure; and

a second mounting structure comprising:

a retaining structure having an equipment item stabilization section and a coupling structure adapted to produce a plurality of retaining forces along a plurality of axes on a moveable equipment item mounted along the equipment stabilization section, at least one of said retaining forces maintains said moveable equipment item in a substantially fixed position and orientation in relation to said second mounting structure;

wherein said first and second mounting structures are coupled to said mounting plate on one side of said mounting plate;

wherein said plurality of apertures in said base plate comprise a first and second plurality of apertures, said first plurality of apertures are located and positioned in said base plate based on a determination of available mounting area of said receiving structure said mounting system is adapted to be coupled with which is no greater than the outer footprint of said base plate and a predetermined distribution of force limit transmitted from said first and second mounting structures to said base plate and then to said first plurality of fasteners required to maintain said removable equipment item in a fixed position relative to said receiving structure when a predetermined force is transmitted to said moveable equipment item through said mounting system after it is mounted upon said receiving structure.

2. A mounting system as in claim **1**, wherein said first mounting structure is coupled to said base plate at a first coupling location, said first mounting structure is formed so that said clamping mechanism is positioned to laterally offset said clamping mechanism from a section of said base plate along an axis formed by a line drawn between said first and second mounting structures and farther away from a line perpendicular to said base plate and extending up from said first coupling location.

3. A mounting system as in claim **1**, wherein said first and second mounting structure are adapted to position a first and second point of said removable item substantially parallel to a plane defined by said base plate.

4. A mounting system as in claim **1**, further comprising a plurality of second threaded protrusions adapted to receive said threaded nuts, said plurality of second threaded protrusions are coupled to said base plate in a different section than said first plurality of fasteners.

5. A mounting system as in claim **1**, wherein at least one side of said base plate is adapted to conform to a portion of an outer edge of said receiving structure having an aperture which said base plate is coupled to position said mounting system in a predetermined orientation to said aperture such that said mounting system positions said moveable equipment item so that it does not obstruct said aperture.

6. A mounting system as in claim **1**, wherein said first mounting structure is coupled to said base plate using a second plurality of fasteners, wherein said mounting system further comprises a thread locking compound or structure, said locking compound or structure is adapted to be used with said second plurality of fasteners to reduce loosening of said second plurality of fasteners when said mounting system has a vibration or other force applied to it.

7. A mounting system as in claim **1**, wherein moveable retaining structure is an elastic strap comprising a handle, a spherical structure, and an attachment point adapted to receive a locking pin.

8. A mounting system as in claim **1**, wherein said first and second mounting structures positioning are determined based on a plurality of characteristics of said removable item comprising weight distribution of said removable item and an orientation of said removable item with regard to a structure which said mounting system is mounted in proximity with.

9. A mounting system as in claim **1**, further comprising a locking system adapted to restrict removal of said removable item from said mounting system.

10. A method of manufacturing a mounting system comprising:

providing a first plurality of fasteners, wherein said first plurality of fasteners comprise adhesive bonded fasteners each comprising a base portion, a first threaded protrusion, and a threaded nut which screws onto said threaded protrusion;

providing a base plate formed with a plurality of apertures adapted to receive said first plurality of fasteners;

providing a first mounting structure comprising a clamping mechanism and a first moveable equipment item mount interface structure coupled to said first mounting structure in proximity to or within said clamping mechanism, said clamping mechanism is adapted to releasably couple a removable item with said first mounting structure; and

providing a second mounting structure comprising:

a body;

a first protrusion section;

a moveable retaining structure having a first and second portion which is adapted to produce a restoring force which tends to retract said retaining structure when placed into a predetermined position;

a first attachment section formed on one side of said second mounting structure adapted to receive said first portion of said retaining structure;

a second attachment section formed on another side of said second mounting structure adapted to receive said second portion of said retaining structure;

a second equipment item mount interface structure coupled with a section of said first protrusion section and in proximity to said first and second attachment sections;

wherein said first protrusion section is formed on one end of said body, said first protrusion section forms a planar structure and is oriented substantially in parallel with one side of said body extending away from said body;

wherein said first and second mounting structures are coupled to said base plate on one side of said base plate;

wherein said first and second mounting structures are further adapted to receive and releasably hold said removable item such that said removable item can be released in substantially one direction after an application of

force is applied to said removable item and said moveable retaining structure is manipulated to reposition said retaining structure away from second attachment point;

wherein said plurality of apertures in said base plate comprise a first and second plurality of apertures, said first plurality of apertures are located in said base plate based on a determination of available mounting area of a receiving structure said mounting system is adapted to be coupled with and predetermined distribution of force transmitted from said first and second mounting structures to said base plate and then to said first plurality of fasteners required to maintain said removable equipment item in a fixed position relative to said receiving structure when a predetermined force is transmitted to said removable item through said mounting system after it is mounted upon said receiving structure.

11. A method of manufacturing as in claim **10**, wherein said first mounting structure is coupled to said base plate at a first coupling location, said first mounting structure is formed so that said clamping mechanism is positioned to laterally offset said clamping mechanism from a section of said base plate along an axis formed by a line drawn between said first and second mounting structures and farther away from a line perpendicular to said base plate and extending up from said first coupling location.

12. A method of manufacturing as in claim **10**, wherein said first and second mounting structure are adapted to position a first and second point of said removable item substantially parallel to a plane defined by said base plate.

13. A method of manufacturing as in claim **10**, further comprising a plurality of second threaded protrusions adapted to receive said threaded nuts, said plurality of second threaded protrusions are coupled to said base plate in a different section than said first plurality of fasteners.

14. A method of manufacturing as in claim **10**, wherein said base plate is adapted to conform to a structure having an aperture which said base plate is coupled to position said mounting system in a predetermined orientation to said aperture, wherein said aperture is adapted to permit a human to enter, egress, and operate equipment in proximity to said aperture.

15. A method of manufacturing as in claim **10**, wherein said first mounting structure is coupled to said base plate using a second plurality of fasteners, wherein said mounting system further comprises a thread locking compound or structure, said locking compound or structure is adapted to be used with said second plurality of fasteners to reduce loosening of said second plurality of fasteners when said mounting system has a vibration or other force applied to it.

16. A method of manufacturing as in claim **10**, wherein moveable retaining structure is an elastic strap comprising a handle, a spherical structure, and an attachment point adapted to receive a locking pin.

17. A method of manufacturing as in claim **10**, wherein said first and second mounting structures positioning are determined based on a plurality of characteristics of said removable item comprising weight distribution of said removable item and an orientation of said removable item with regard to a structure which said mounting system is mounted in proximity with.

18. A method of manufacturing as in claim **10**, further comprising a locking system adapted to restrict removal of said removable item from said mounting system.

19. A method of mounting an equipment item comprising: providing a mounting system comprising:

a first plurality of fasteners, wherein said first plurality of fasteners comprise adhesive bonded fasteners each comprising a base portion, a first threaded protrusion, and a threaded nut which screws onto said threaded protrusion;

a base plate formed with a plurality of apertures adapted to receive said first plurality of fasteners;

a first mounting structure comprising a clamping mechanism and a first moveable equipment item mount interface structure coupled to said first mounting structure in proximity to or within said clamping mechanism, said clamping mechanism is adapted to releasably couple a moveable equipment item with said first mounting structure; and

a second mounting structure comprising:

a body;

a first protrusion section, wherein said first protrusion section is formed on one end of said body, said first protrusion forms a planar structure and is oriented substantially in parallel with one side of said body extends away from said body;

a moveable retaining structure having a first and second portion which is adapted produce a restoring or retraction force which tends to retract or pull opposing ends of said moveable retaining structure when placed into a predetermined position adapted to retain said moveable equipment item in relation to said second mounting structure;

a first attachment section formed on one side of said second mounting structure adapted to receive said first portion of said moveable retaining structure;

a second attachment section formed on another side of said second mounting structure which substantially opposes the side said first attachment section is located on said second mounting structure, said second attachment section is adapted to receive said second portion of said moveable retaining structure;

a second equipment item mount interface structure coupled with a section of said first protrusion section and in proximity to said first and second attachment section;

wherein said first and second mounting structures are coupled to said base plate on one side of said base plate;

wherein said first and second mounting structures are further adapted to receive and releasably hold said moveable equipment item such that said moveable equipment item can be released in substantially one direction after an application of force is applied to said moveable equipment item and said moveable retaining structure is manipulated to reposition said retaining structure away from second attachment point;

wherein said plurality of apertures in said base plate comprise a first and second plurality of apertures, said first plurality of apertures are located in said base plate based on a determination of available mounting area of a receiving structure said mounting system is adapted to be coupled with which is no greater than the outer footprint of said base plate and a predetermined distribution of force transmitted from said first and second mounting structures to said base plate and

then to said first plurality of fasteners required to maintain said movable equipment item in a fixed position relative to said receiving structure when a predetermined force is transmitted to said movable equipment item through said mounting system after it is mounted upon said receiving structure;

placing a first section of said movable equipment item in said clamp with contact with said first equipment item mount interface structure and a second portion of said movable equipment item in said second equipment item mount interface structure;

manipulating said moveable retaining structure into said predetermined position that couples one end of said moveable retaining structure with first attachment point and said second end of said moveable retaining structure with said second attachment point.

20. A method of mounting an equipment item as in claim **19**, wherein said first mounting structure coupled to said base plate at a first coupling location, said first mounting structure is formed so that said clamping mechanism is positioned to laterally offset said clamping mechanism from a section of said base plate along an axis formed by a line drawn between said first and second mounting structures and farther away from a line perpendicular to said base plate and extending up from said first coupling location.

21. A method of mounting an equipment item as in claim **19**, wherein said first and second mounting structure are adapted to position a first and second point of said movable equipment item substantially parallel to a plane defined by said base plate.

22. A method of mounting an equipment item as in claim **19**, further comprising providing a plurality of second threaded protrusions adapted to receive said threaded nuts, said plurality of second threaded protrusions are coupled to said base plate in a different section than said first plurality of fasteners.

23. A method of mounting an equipment item as in claim **19**, wherein said base plate is adapted to conform to a portion of an outer edge of said receiving structure having an aperture which said base plate is coupled to position said mounting system in a predetermined orientation to said aperture such that said mounting system positions said moveable equipment item so that it does not obstruct said aperture.

24. A method of mounting an equipment item as in claim **19**, wherein said first mounting structure is coupled to said base plate using a second plurality of fasteners, wherein said mounting system further comprises a thread locking compound or structure, said locking compound or structure is adapted to be used with said second plurality of fasteners to reduce loosening of said second plurality of fasteners when said mounting system has a vibration or other force applied to it.

25. A method of mounting an equipment item as in claim **19**, wherein moveable retaining structure is an elastic strap comprising a handle, a spherical structure, and an attachment point adapted to receive a locking pin.

26. A method of mounting an equipment item as in claim **19**, wherein said first and second mounting structures positioning are determined based on a plurality of characteristics of said movable equipment item comprising weight distribution of said removable item and an orientation of said removable item with regard to a receiving structure which said mounting system is mounted in proximity with.

27. A method of mounting an equipment item as in claim **19**, further comprising providing a locking system adapted to restrict removal of said moveable equipment item from said mounting system.

28. A method of mounting an equipment item as in claim **19**, wherein said moveable equipment item comprises a weapon assembly.

29. A method of manufacturing a mounting system comprising:

determining user design requirement factors comprising user interface factors related to a moveable equipment item, location a user interacts with said moveable equipment item, location on a receiving structure which the mounting system is to be placed, user accessibility to said moveable equipment item, and user requirements for use of said moveable equipment item to include orientation of said moveable equipment item, and quick retrieval and use of said moveable equipment item, wherein location a user interacts with said moveable equipment item comprises user locations such as a vehicle turret or access port;

analyzing and measuring a mounting surface of a receiving structure intended to have the mounting system attached thereto to identify and determine receiving surface design factors, said design factors comprising material characteristics of the receiving structure comprising material strength, surface finish that may affect attachment methods such as bolting, welding, gluing, or interaction with magnetic coupling forces;

analyzing and determining operational design factors to include kinetic force expected to be applied to the mounting system with and without said moveable equipment item being mounted within said mounting system, and attributes of a hostile environment which said mounting system and moveable equipment item are expected to operate within

selecting one or more fastening methods for coupling said mounting system to said receiving surface based on said user design requirement factors, operational design factors, and receiving surface design factors comprising bolting, welding, gluing, fasteners based on said design factors;

providing and forming a base plate sized and dimensioned based on said user design requirement factors, operational design factors, and receiving surface design factors, said receiving surface design factors further include an available receiving structure footprint;

providing a first mounting structure comprising a clamping mechanism, said clamping mechanism is adapted to releasably couple a removable item with said first mounting structure;

providing a second mounting structure comprising:

a retaining structure having an equipment item stabilization section and a coupling structure adapted to produce a plurality of retaining forces along a plurality of axis on a moveable equipment item mounted along retaining force that maintains said moveable equipment item in a substantially fixed position and orientation in relation to said second mounting structure;

coupling said first and second mounting structures to said mounting plate on one side of said mounting plate;

coupling said base plate to said mounting surface of a receiving structure using said selected one or more fastening methods for coupling said mounting system to said receiving surface.

30. A method as in claim **29**, wherein when bolting is selected as said fastening method, then, providing a first plurality of fasteners, wherein said first plurality of fasteners comprise adhesive bonded fasteners each comprising a base portion, a first threaded protrusion, and a threaded nut which screws onto said threaded protrusion;

wherein said plurality of apertures in said base plate comprise a first and second plurality of apertures, said first plurality of apertures are located and positioned in said base plate based on a determination of available mounting area of said receiving structure said mounting system is adapted to be coupled with which is no greater than the outer footprint of said base plate and a predetermined distribution of force limit transmitted from said first and second mounting structures to said base plate and then to said first plurality of fasteners required to maintain said removable equipment item in a fixed position relative to said receiving structure when a predetermined force is transmitted to said moveable equipment item through said mounting system after it is mounted upon said receiving structure.

* * * * *