US008434397B1

(12) **United States Patent**
Deckard et al.

(10) **Patent No.: US 8,434,397 B1**
(45) **Date of Patent: May 7, 2013**

(54) **HELICOPTER WEAPON MOUNTING SYSTEM**

(75) Inventors: **Aaron Deckard**, Wheatland, IN (US); **Glen Dick**, Jasper, IN (US); **Paul Danesha**, Bedford, IN (US); **Michael Holzmeyer**, Bloomfield, IN (US); **James Buechler**, Jasper, IN (US)

(73) Assignee: **The United States of America as represented by the Secretary of the Navy**, Washington, DC (US)

(*) Notice: Subject to any disclaimer, the term of this patent is extended or adjusted under 35 U.S.C. 154(b) by 0 days.

(21) Appl. No.: **13/559,980**

(22) Filed: **Jul. 27, 2012**

Related U.S. Application Data

(60) Provisional application No. 61/657,735, filed on Jun. 8, 2012.

(51) **Int. Cl.**
B64D 7/00 (2006.01)

(52) **U.S. Cl.**
USPC **89/37.16**; 89/37.13

(58) **Field of Classification Search** 89/37.16–37.22
See application file for complete search history.

(56) **References Cited**

U.S. PATENT DOCUMENTS

167,006	A	8/1875	Metcalfe
273,249	A	3/1883	Bruce
1,172,542	A	2/1916	McMullen
1,806,724	A	5/1931	Wait, Jr.
1,948,497	A	2/1934	Barnes
2,111,008	A	3/1938	Smiling
2,227,726	A	1/1941	Laddon et al.
2,299,227	A	10/1942	Goetz
2,345,747	A	4/1944	Hake
2,358,105	A	9/1944	Scott-Paine
2,370,896	A	3/1945	Weaver
2,415,153	A	2/1947	Trimbach et al.
2,421,052	A	5/1947	Cantley
2,421,858	A	6/1947	Trimbach
2,464,689	A	3/1949	Jackson
2,536,358	A	1/1951	Eastman

(Continued)

FOREIGN PATENT DOCUMENTS

CH	672179	A5	10/1989
GB	572437	A	10/1945
JP	02-231897		9/1990
WO	9315955	A1	8/1993

OTHER PUBLICATIONS

Photograph: AIRWOLF: Airshow 2; http://airwolf.tv-series.com/default.asp?ModuleID=16&PageID=50&p_id=1130, 1 page, at least as early as May 30, 2012.

(Continued)

Primary Examiner — Samir Abdosh
(74) *Attorney, Agent, or Firm* — Christopher A. Monsey

(57) **ABSTRACT**

A weapon mounting system for a vehicle, such as a helicopter. The weapon mounting system illustratively includes a weapon cradle supporting a machine gun for pivoting movement about a generally horizontal elevational axis. A carriage supports the weapon cradle and is supported by a pintle for rotation about a generally vertical azimuth axis. An ejection collection device is supported by the carriage and collects spent shell casings and links ejected from the machine gun for discharge through the pintle. A trigger assembly illustratively provides for manual operation by a gunner and for remote electrical operation by a pilot.

18 Claims, 39 Drawing Sheets

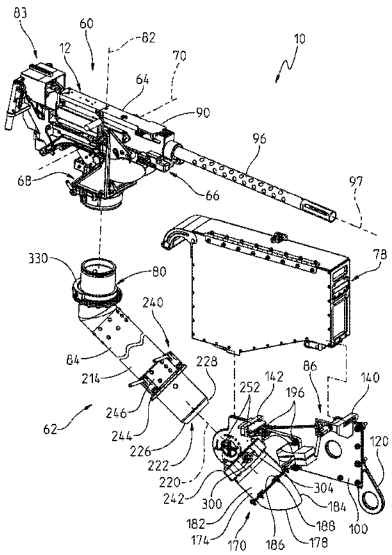

U.S. PATENT DOCUMENTS

2,564,568 A 8/1951 Franklin
2,568,229 A 9/1951 Gardes
2,725,791 A 12/1955 Gravenhorst et al.
2,767,617 A 10/1956 Taylor
3,011,408 A 12/1961 Brothers, Jr. et al.
3,086,425 A 4/1963 Huey
3,138,994 A 6/1964 Blunk
3,218,930 A 11/1965 Girouard et al.
3,352,207 A 11/1967 Proudlove
3,417,658 A 12/1968 Betzold et al.
3,463,424 A 8/1969 Pickell
3,485,151 A 12/1969 Taylor
3,590,684 A 7/1971 Gilbert
3,604,660 A 9/1971 Marley
3,610,825 A * 10/1971 Fritzel 348/144
3,623,726 A 11/1971 Pittinger et al.
3,634,622 A * 1/1972 Wheeler 348/369
3,640,177 A 2/1972 Hottinger
3,687,004 A 8/1972 Faisandier
3,731,589 A 5/1973 Pfeiffer et al.
3,911,787 A 10/1975 Seibel
3,994,202 A 11/1976 Tidstrom
4,011,789 A 3/1977 Bresee, Jr. et al.
4,020,738 A 5/1977 Martinez
4,079,658 A 3/1978 Brennan
4,092,900 A 6/1978 Hottinger et al.
4,194,432 A 3/1980 Conway et al.
4,256,012 A 3/1981 Cowart et al.
4,325,284 A 4/1982 Grunewald et al.
4,354,419 A 10/1982 Patterson
4,470,817 A 9/1984 Diehl et al.
4,524,670 A 6/1985 Billard et al.
4,573,395 A 3/1986 Stoner
4,601,230 A 7/1986 LeBlanc
4,601,445 A 7/1986 Duclos et al.
4,638,715 A 1/1987 LeBlanc
4,681,019 A 7/1987 Brandl et al.
4,682,529 A 7/1987 Duclos et al.
4,715,263 A * 12/1987 Kramer et al. 89/37.21
4,752,791 A 6/1988 Allred
4,893,545 A * 1/1990 Sanderson et al. 89/37.19
4,937,965 A 7/1990 Narvaez
4,966,063 A 10/1990 Sanderson et al.
4,967,640 A 11/1990 Dodd
4,972,758 A 11/1990 Austin et al.
4,974,490 A 12/1990 Austin
4,974,499 A 12/1990 Sanderson et al.
4,982,650 A 1/1991 Bender-Zanoni et al.
5,024,138 A 6/1991 Sanderson et al.
5,050,477 A 9/1991 Cowdery et al.
5,072,895 A 12/1991 Camus
5,093,677 A 3/1992 McMahon
5,104,063 A 4/1992 Hartley
5,107,750 A 4/1992 Buchstaller et al.
5,155,292 A 10/1992 Rostcil et al.
5,187,318 A * 2/1993 Sanderson et al. 89/37.22
5,191,370 A 3/1993 Bozzolato
5,206,454 A 4/1993 Sanderson
5,253,574 A 10/1993 Sanderson
5,263,397 A 11/1993 Sanderson
5,282,410 A * 2/1994 Sanderson 89/37.16
5,282,589 A 2/1994 Branigan et al.
5,365,291 A 11/1994 Maeda
5,381,721 A 1/1995 Holmstrom et al.
5,390,582 A 2/1995 Sanderson
5,400,690 A 3/1995 Meili et al.
5,408,915 A 4/1995 Stoner
5,419,234 A * 5/1995 Sanderson 89/37.22
5,426,476 A 6/1995 Fussell et al.
5,431,084 A 7/1995 Fowler et al.
5,440,964 A 8/1995 Bender-Zanoni
5,483,865 A 1/1996 Brunand
5,554,815 A 9/1996 Authie et al.
5,589,901 A 12/1996 Means
5,687,930 A 11/1997 Wagner et al.
5,767,436 A 6/1998 Sanderson et al.
6,056,237 A 5/2000 Woodland
6,176,167 B1 * 1/2001 Sanderson 89/1.54
6,206,325 B1 3/2001 Nunnally
6,250,196 B1 6/2001 Sanderson
6,250,197 B1 * 6/2001 Sanderson 89/37.16
6,272,967 B1 8/2001 Bender-Zanoni et al.
6,283,428 B1 9/2001 Maples et al.
6,286,411 B1 * 9/2001 Sanderson 89/37.16
6,293,179 B1 9/2001 Sanderson
6,305,263 B1 10/2001 Wallin
6,339,983 B1 1/2002 Mannhart
6,345,562 B1 2/2002 Mannhart
6,393,960 B1 5/2002 Bilger
6,405,975 B1 6/2002 Sankrithi et al.
6,453,792 B1 9/2002 Hampton
6,469,783 B1 10/2002 Wells et al.
6,484,619 B1 11/2002 Thomas et al.
6,530,169 B1 3/2003 Griffin
6,547,181 B1 4/2003 Hoisington et al.
6,564,690 B1 5/2003 Long
6,592,071 B2 7/2003 Kinkead et al.
6,622,606 B1 9/2003 Neal
6,626,398 B1 9/2003 Cox et al.
6,675,694 B1 1/2004 Liebig
6,695,270 B1 2/2004 Smed
6,718,862 B1 4/2004 Sanderson
6,779,430 B1 * 8/2004 Sanderson 89/33.16
6,789,455 B1 * 9/2004 Sanderson 89/37.07
6,793,108 B2 9/2004 Williams, Jr.
6,796,300 B2 9/2004 Petrosyan et al.
6,799,500 B1 10/2004 Kulikowski
6,802,238 B1 10/2004 Sanderson
6,802,239 B1 * 10/2004 Sanderson 89/41.21
6,820,532 B2 11/2004 Sanderson
7,066,365 B2 6/2006 Brown
7,069,683 B1 7/2006 Kapusta
7,086,192 B2 8/2006 Deros
7,168,200 B2 1/2007 Perez et al.
7,258,055 B1 8/2007 Javorsky
7,513,187 B1 4/2009 Lambermont
7,543,524 B1 6/2009 Javorsky
7,624,947 B2 12/2009 Dortch et al.
7,694,620 B1 4/2010 Narus
8,069,767 B2 12/2011 Deckard et al.
8,151,684 B2 4/2012 Buechler et al.
2004/0060428 A1 4/2004 Sanderson
2007/0131103 A1 6/2007 McClellan et al.
2010/0101401 A1 4/2010 Toeckes et al.
2010/0294119 A1 11/2010 Buechler et al.
2010/0294120 A1 11/2010 Deckard et al.
2010/0319521 A1 12/2010 Dick et al.

OTHER PUBLICATIONS

Figure showing components of armament subsystem M6 installed on UH-11B/C helicopter—right side shown; http://en.wikipedia.org/wiki/File:M6_Schematic.jpg, 2 pages, at least as early as May 30, 2012.

Bell UH-1 Iroquois Article, http://en.wikipedia.org/wiki/UH-1_Iroquois, 22 pages, at least as early as May 30, 2012.

M60 Machine Gun Article, http://www.enotes.com/topic/M60_machine gun, 25 pages, at least as early as May 30, 2012.

List of U.S. Aircraft Gun Pods Article, http://en.wikipedia.org/wiki/U.S._aircraft_gun_pods, 5 pages, at least as early as May 30, 2012.

Mayhood, et al., Helicopter Armament, Marine Corps Gazette (Pre-1964), 45(2), 17-18, 1961.

Debay, Combat Helicopters, Paris: Histoire & Collections, 1996, p. 144.

Stapfer, Soviet Military Helicopters, London: Arms and Armour; New York, NY: Distributed in the USA by Sterling Pub. Co., c1991, p. 40.

Definition of SPONSON from Oxford English Dictionary, 1989, 2 pages.

Definition of SPONSON from the Free Dictionary by Farlex, http://www.thefreedictionary.com/sponson, 1 page, at least as early as May 21, 2012.

Definition of SPONSON from Webster Dictionary, 1976 and 1987, 5 pages.

Photograph: UH-1C Gunship, http://en.wikipedia.org/wiki/file:Avhuey_05.jpg, 3 pages, at least as early as May 30, 2012.
Lockheed AC-130 Article; http://en.wikipedia.org/wiki/Lockheed_AC-130, 14 pages, at least as early as May 30, 2012.
Photograph: Spooky Gunship Armed with New Cannons and accompanying description; http://en.wikipedia.org/wiki/File:070126-F-8732E-600.jpg, 4 pages, at least as early as May 30, 2012.
U.S. Helicopter Armament Subsystems Article; http://en.wikipedia.org/wiki/U.S._Helicopter_Armarnent_Subsysterns#UH-1_Iroquois, 23 pages, at least as early as May 30, 2012.
Braybrook, Earth-Moving Add-Ons for Chopppers, Armada International 25, (6): 90-96, 2001.
Braybrook, A Wolf in Sheep's Clothing,Armada International 25, (6): 8-16, 2001.
Braybrook, Teeth for Choppers, Armada International 21, (5): 8-18, 1997.
XM-21 Minigun & 7-Shot Rocket Pods Article; http://www.174ahc.org/shrkmini.htm, at least as early as Apr. 4, 2012.
Atwater, et al., The Measurement and Modeling of a World War I Mark IV Tank Using CLR and CCD Camera/Line Scanning Systems in an Outside Environment, pp. 1-9, at least as early as Jul. 25, 2012.
Illustrated Directory of Special Forces (available at: http://books.google.com/books?id=B8AbZk-IGJoC&pg=PA426&dq=ac-130&lr=#v=o), cover, pp. 1 and 427, 2002.
Photograph: AC-130 Gunship; http://en.wikipedia.org/wiki/File:Ac130_gunship.jpg, 3 pages, at least as early as May 30, 2012.
Airwolf (helicopter) Article; http://en.wikipedia.org/wiki/Airwolf_(helicopter), 6 pages, at least as early as May 30, 2012.
Shark Door Gunner's M-60 Machine Gun Article; http://www.174ahc.org/m-60.htm, Nov. 5, 2011.
Photo of Airwolf, at least as early as May 31, 2012.
21st Special Operations Squadron [21st SOS] Article; http://usafhpa.org/21stsos/21stSOS88to07.html, at least as early as Jul. 2, 2012.
History of the 21st Helicopter Squadron Article; http://usafhpa.org/21stsos/21sthist.html, at least as early as Jul. 2, 2012.
Vietnam War Helicopter Aviation: USAF ARRS and SOS Helicopters Article; http://www.militaryphotos.net/forums/showthread.php?139419-Vietnam-War-Helicopter-Aviation-USAF-ARRS-and-SOS-helicopters, at least as early as Jul. 2, 2012.
McDonnell Douglas AH-64 "Sea Apache" Project Article; http://www.aylastar.org/helicopters_eng/mcdonnell_sea_apache.php, at least as early as Jul. 2, 2012.
Photograph: AIRWOLF: Airwolf Hovering at Low Altitude Over the Airfield: http://airwolf.tv-series.com/default.asp?ModuleID=168,PageID=50&p_id=43, at least as early as Jul. 2, 2012.
Photograph: Airwolf: Airwolf with Chain-Guns Extracted; http://airwolf.tv-series.com/default.asp?ModuleID=16&PageID=50&p_id=44#Image, at least as early as Jul. 2, 2012.
Photograph: THE LADY: The Lady on Show; http://airwolf.tv-series.com/default.asp?ModuleID=16&PageID=50&p_id=1126#Image, at least as early as Jul. 2, 2012.
Photograph: AIRWOLF: Airshow 1; Airwolf 3 pic: http://airwolf.tv-series.com/default.asp?ModuleID=16&PageID=50&p_id=1129#Image, at least as early as Jul. 2, 2012.
About the 1984-Model Airwolf Article; http://airwolf.tv-series.com/default.asp?ModuleID=2&PageID=12&ArticleID=50042, at least as early as Jul. 2, 2012.
Kamov Ka-50 "Black Shark" 1982 Article, http://www.aviastar.org/helicopters_eng/ka-50.php, at least as early as Jul. 2, 2012.
The M60D Machine Gun on the M23 Armament Subsystem Article; http://en.wikipedia.org/wiki/File:M60d-on-m23.jpg, at least as early as Jul. 2, 2012.
Figure of XM59 Subsysem on the UH-1D Helicoper http://en.wikpedia.org/wiki/File:Specs54.jpg, at least as early as Jul. 2, 2012.
Warriors, Quarterly Magazine for the Alaska Department of Military & Veterans Affairs; http://ebooks.aqppublishing.com/archive/national_guard/Warriors.pdf, Title page and p. 24, Summer 2012.
Lockheed AH-56 Cheyenne Attack Helicopter Prototype Article; http://www.militaryfactory.com/aircraft/detail.asp?aircraft_id=258, at least as early as Jul. 2, 2012.
Jack S. Ballard, Development and Employment of Fixed-Wing Gunships 1962-1972 (available at http://books.google.com/books?id=2h1dYiEC9jcC&printsec=frontcover&source), front cover and pp. ii and 126-175.

* cited by examiner

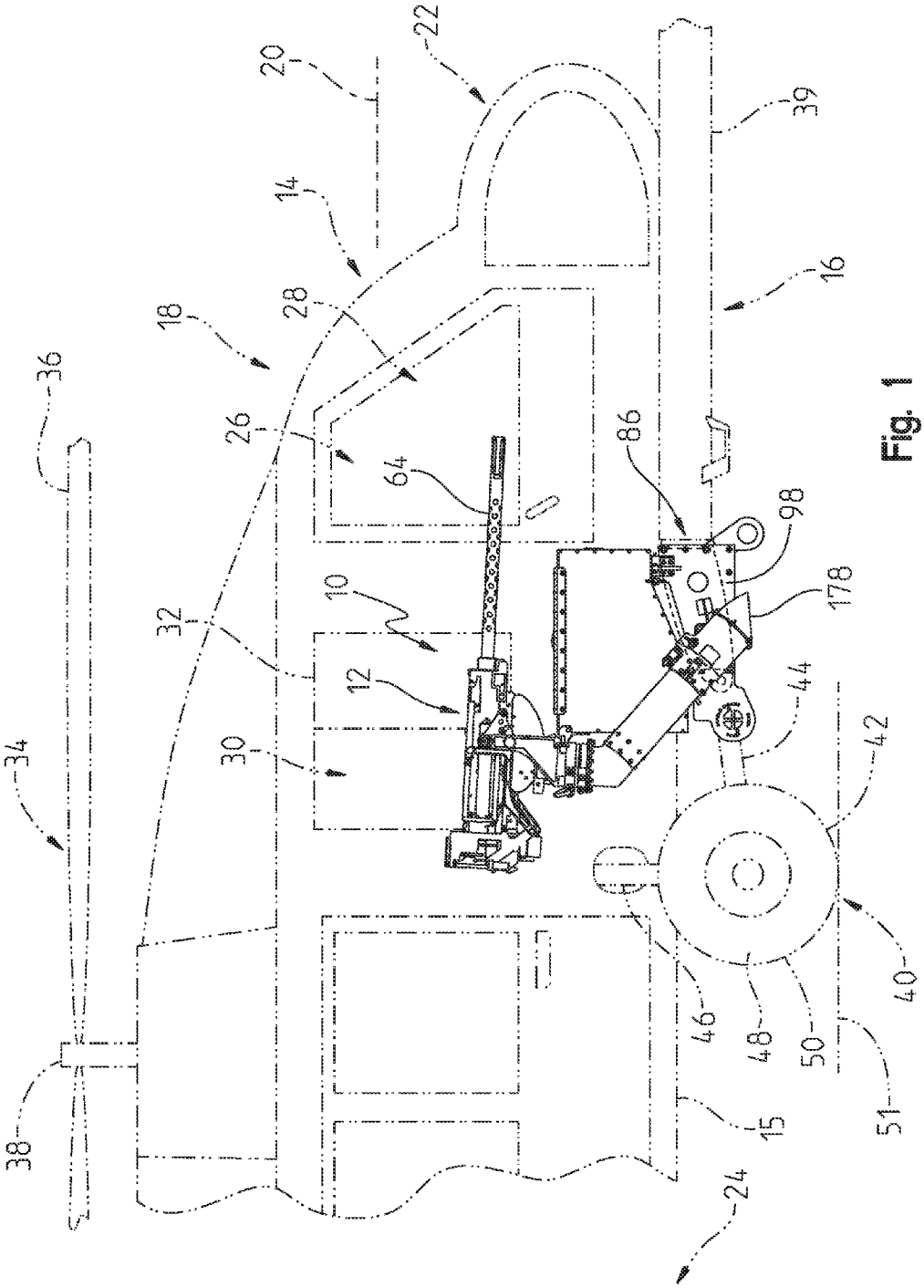
10
12
14
15
16
18
20
22
24
26
28
30
32
34
36
38
39
40
42
44
46
48
50
51
64
86
98
178

Fig. 1

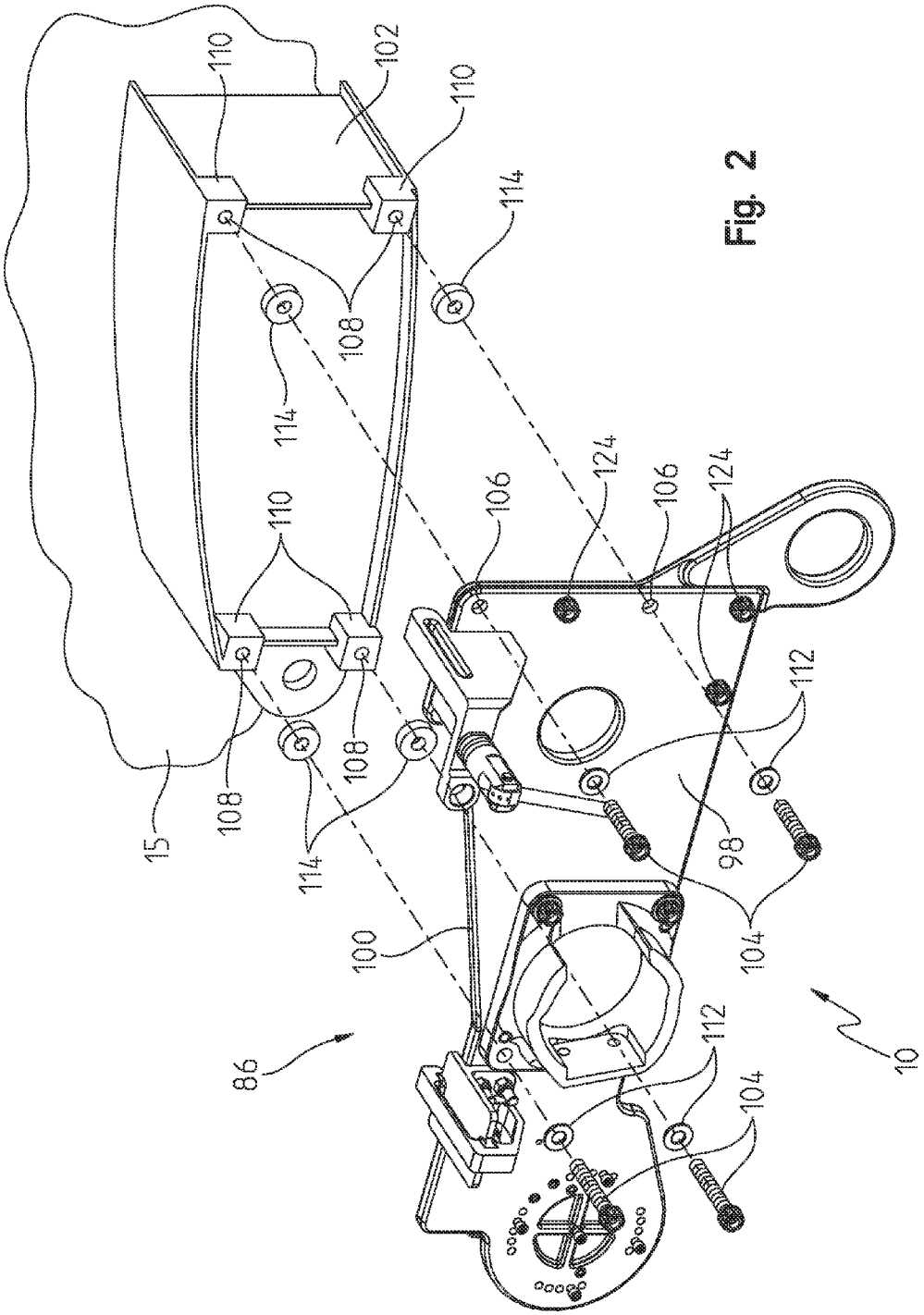
110
102
110
114
108
114
110
106
124
106
124
112
108
108
15
114
98
104
100
86
112
104
10

Fig. 2

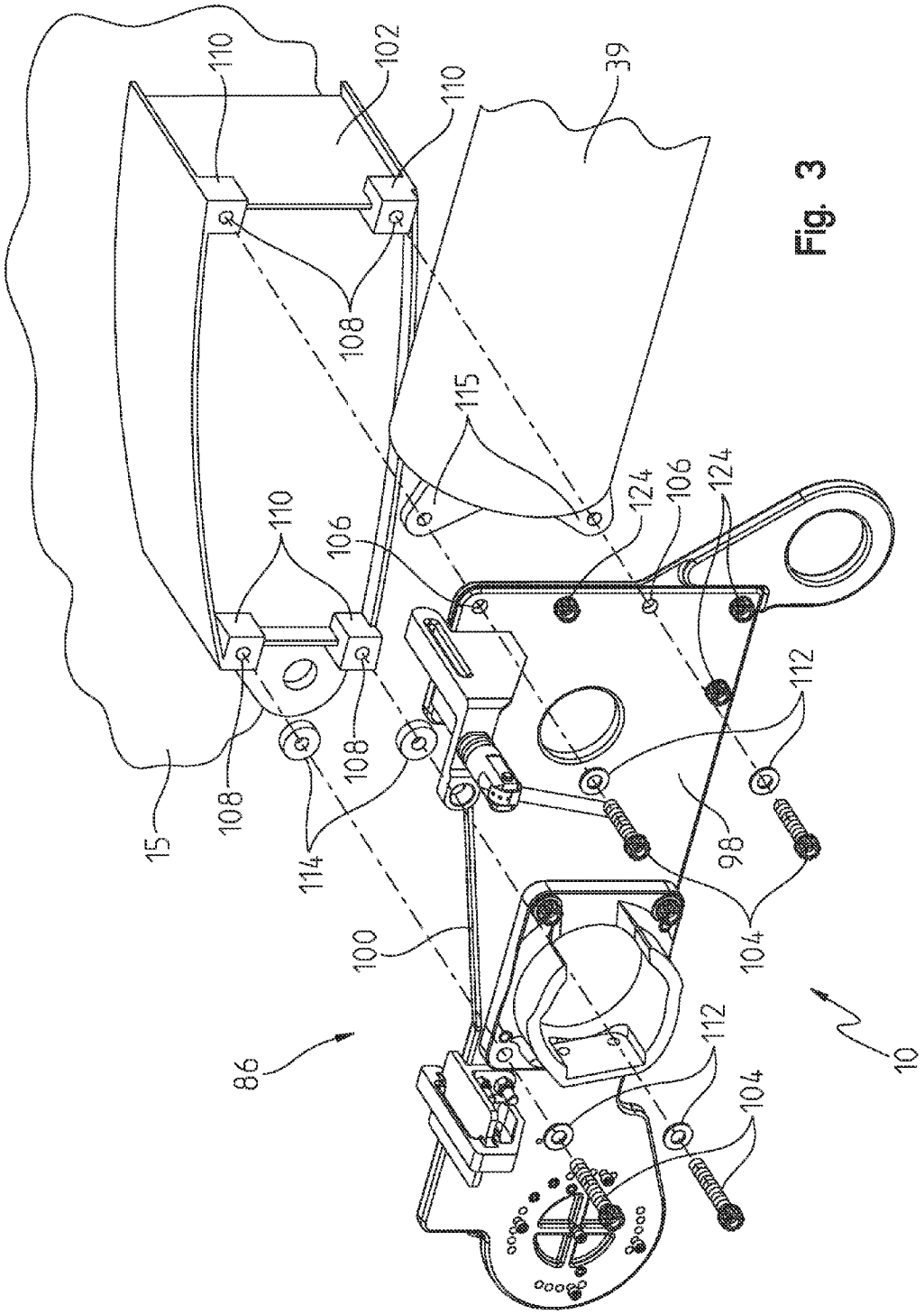
110
102
110
39
108
115
124
106
124
110
106
112
108
108
15
114
98
100
104
86
112
104
10

Fig. 3

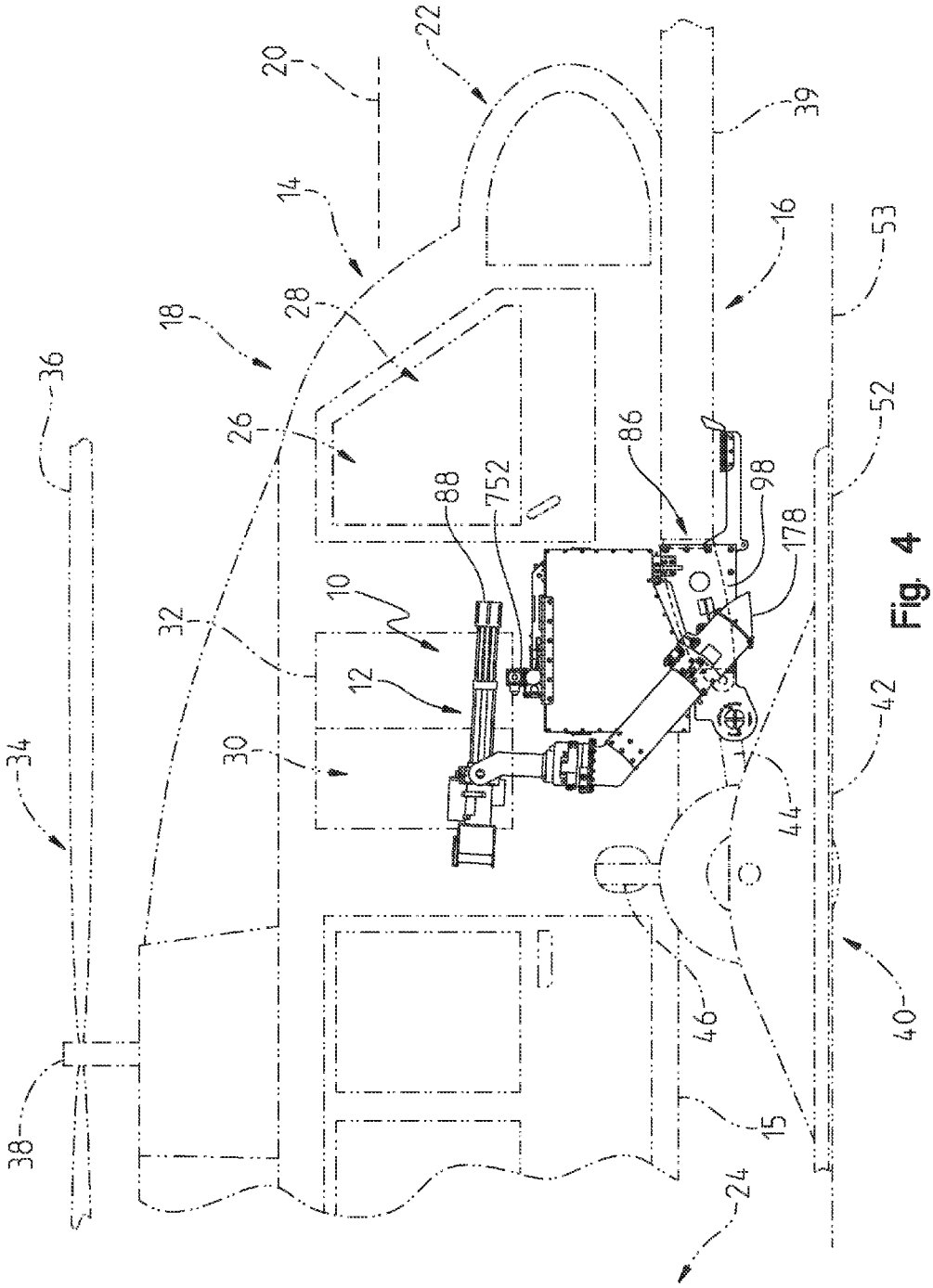
22
20
39
14
16
53
18
28
36
26
86
52
88
752
98
178
10
32
12
42
34
30
44
46
40
38
15
24

Fig. 4

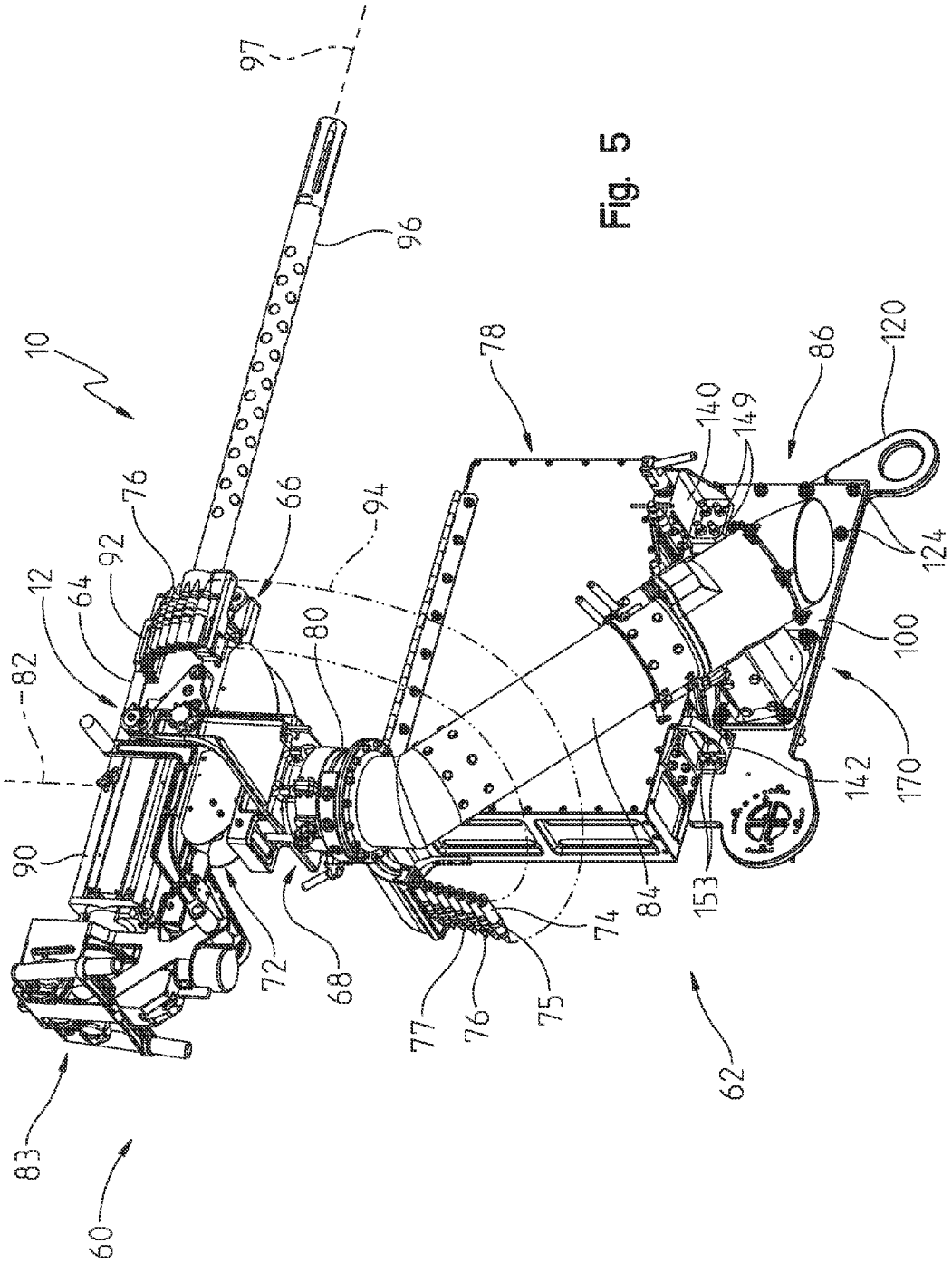
10
97
96
78
86
120
140
149
124
100
170
142
153
84
74
75
76
77
62
68
72
90
82
12
64
92
76
66
94
80
83
60

Fig. 5

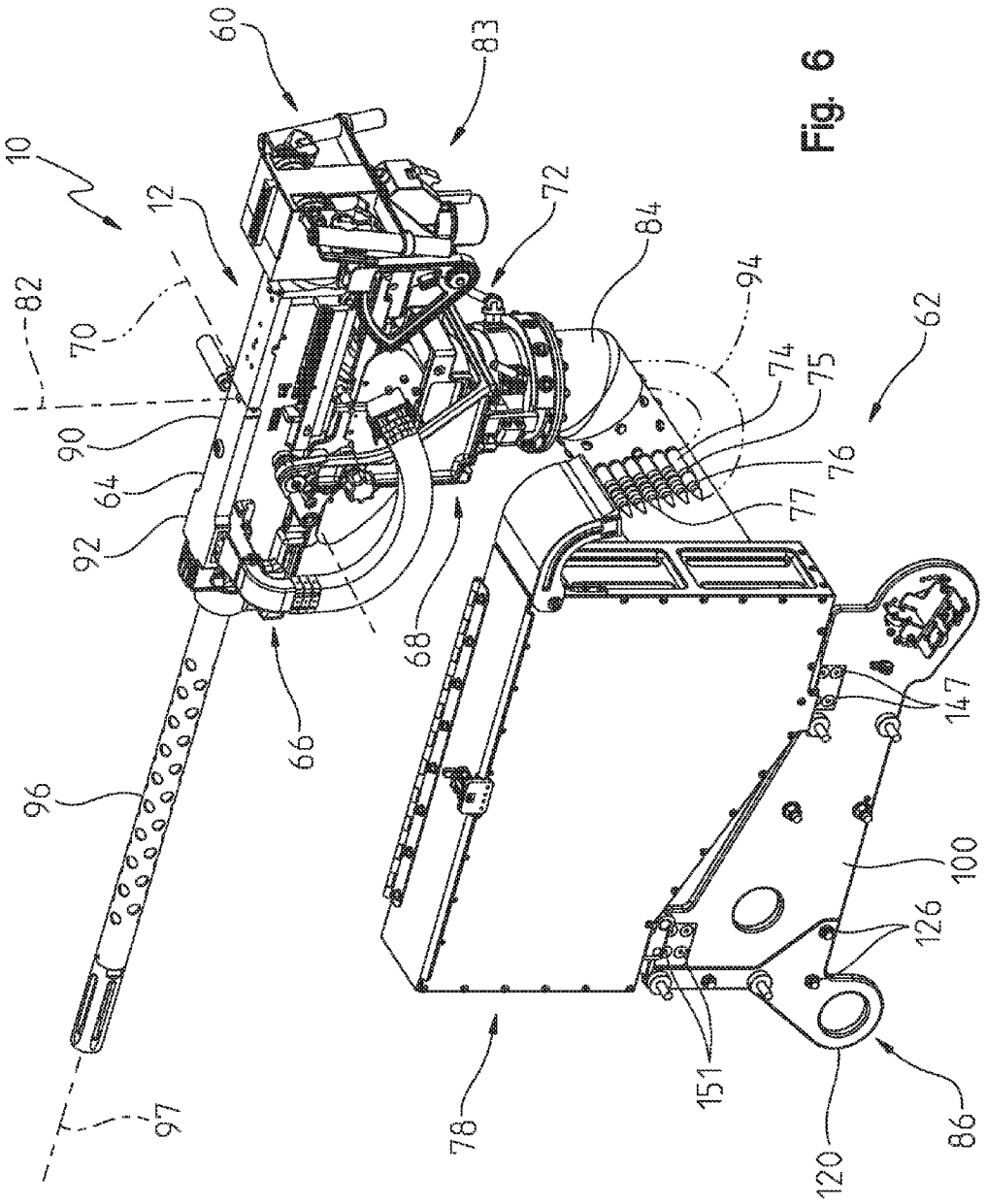
10
12
60
83
72
84
94
62
82
70
90
64
92
74
75
76
77
68
66
96
97
78
151
120
86
126
100
147

Fig. 6

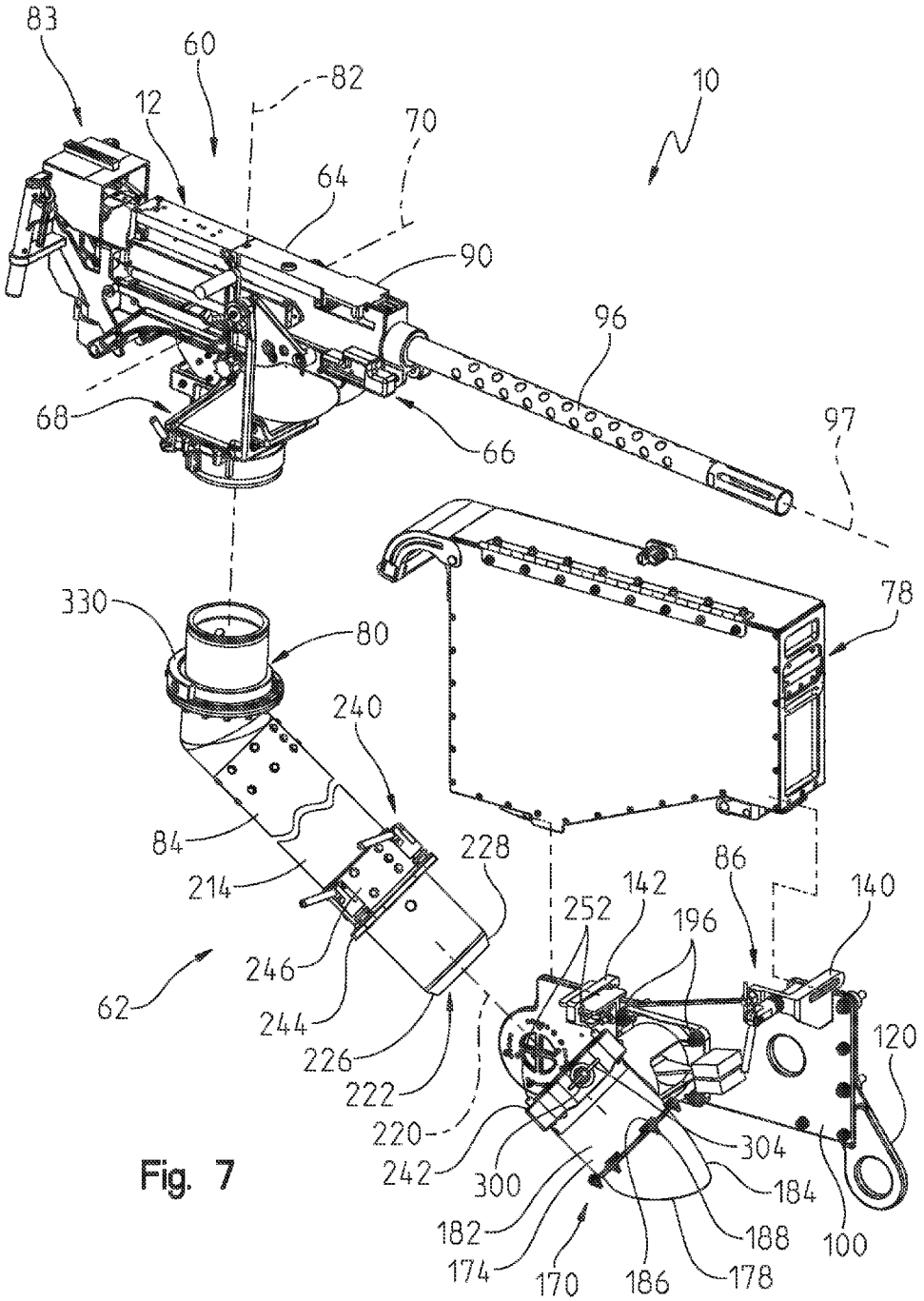
83
60
82
12
70
10
64
90
96
68
66
97
330
80
78
240
84
228
214
86
142
140
252
196
246
62
244
226
222
120
220
304
242
300
184
182
188
100
174
170
186
178

Fig. 7

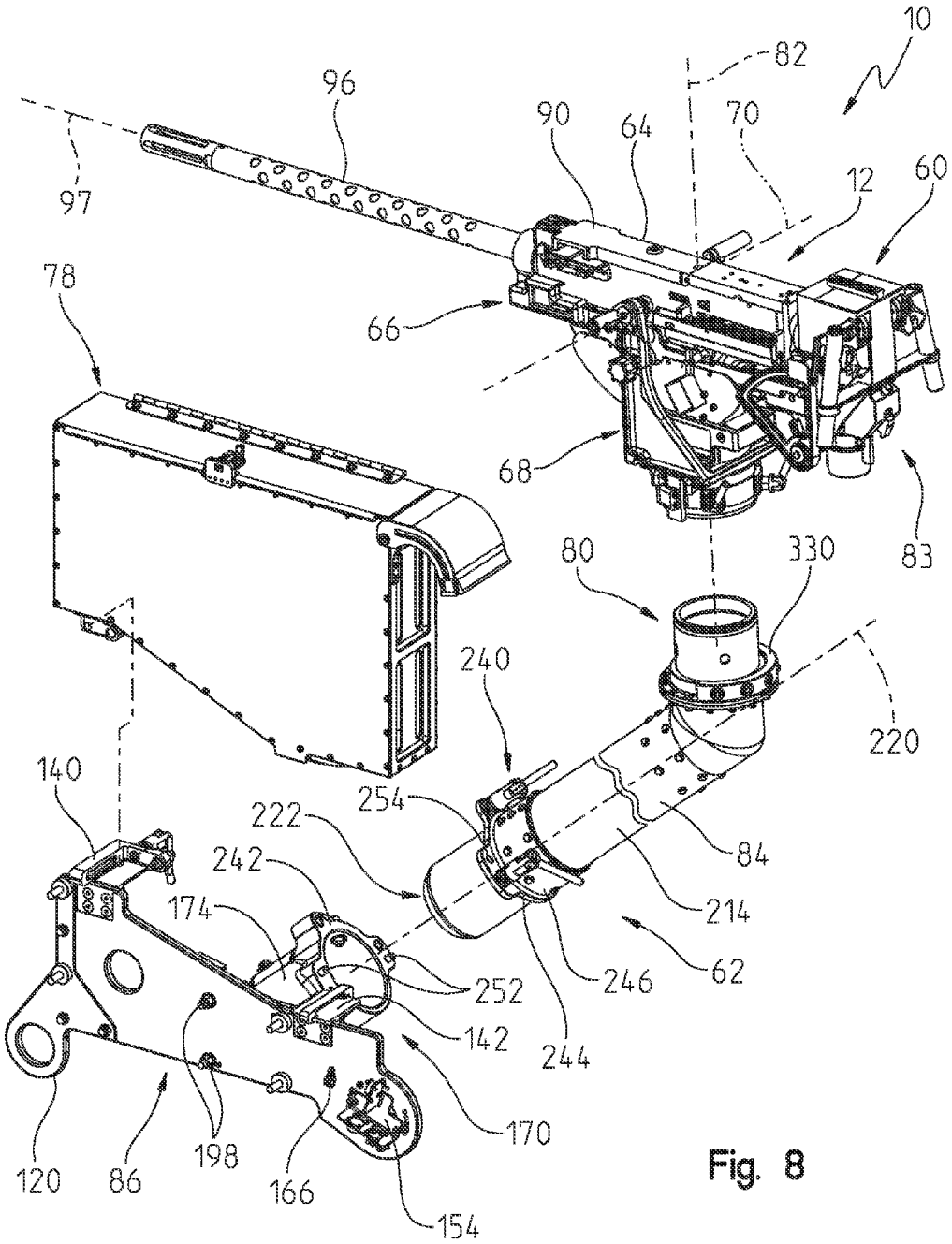
10
82
96
90
64
70
12
60
97
78
66
68
83
80
330
240
220
140
254
222
84
242
214
174
252
246
62
142
244
170
120
86
198
166
154

Fig. 8

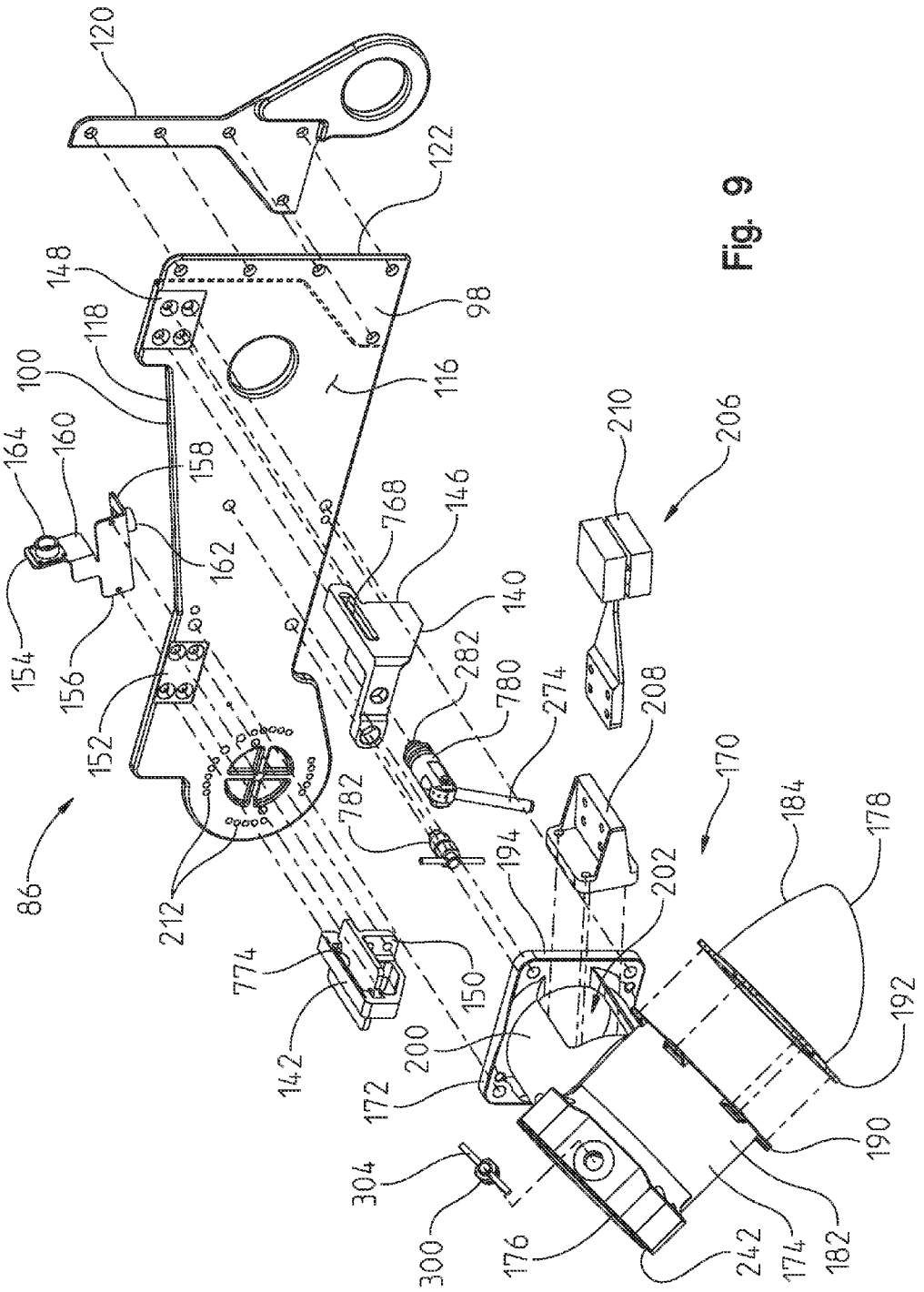
120
122
148
118
100
98
116
164
160
158
162
154
156
152
768
146
140
282
780
274
208
210
206
170
184
178
86
212
782
194
202
774
150
142
200
172
192
190
304
300
176
242
174
182

Fig. 9

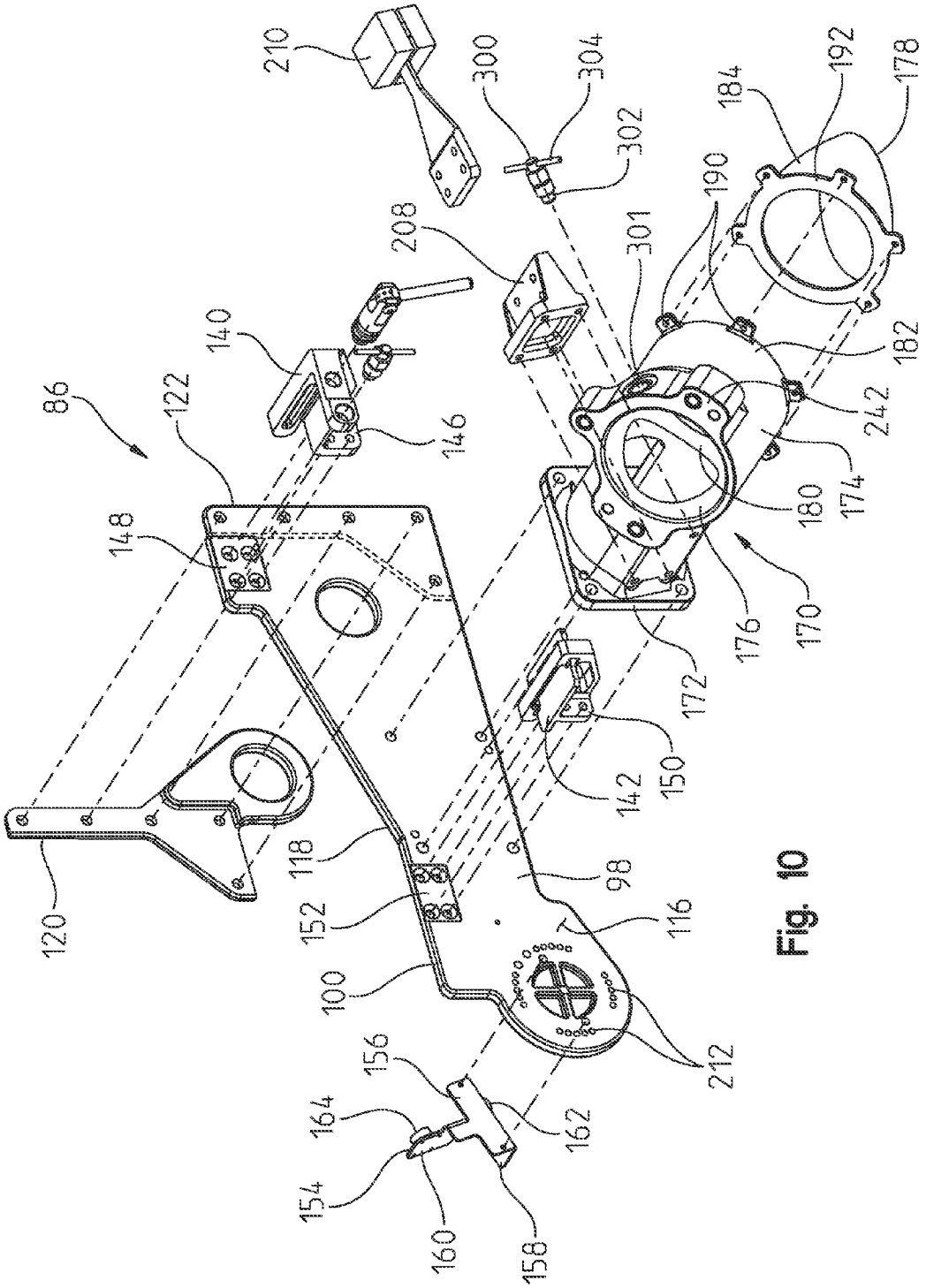
86
120
122
148
140
146
210
208
300
304
302
301
190
184
192
178
182
242
174
180
170
176
172
150
142
118
152
100
98
116
212
156
164
154
160
158
162

Fig. 10

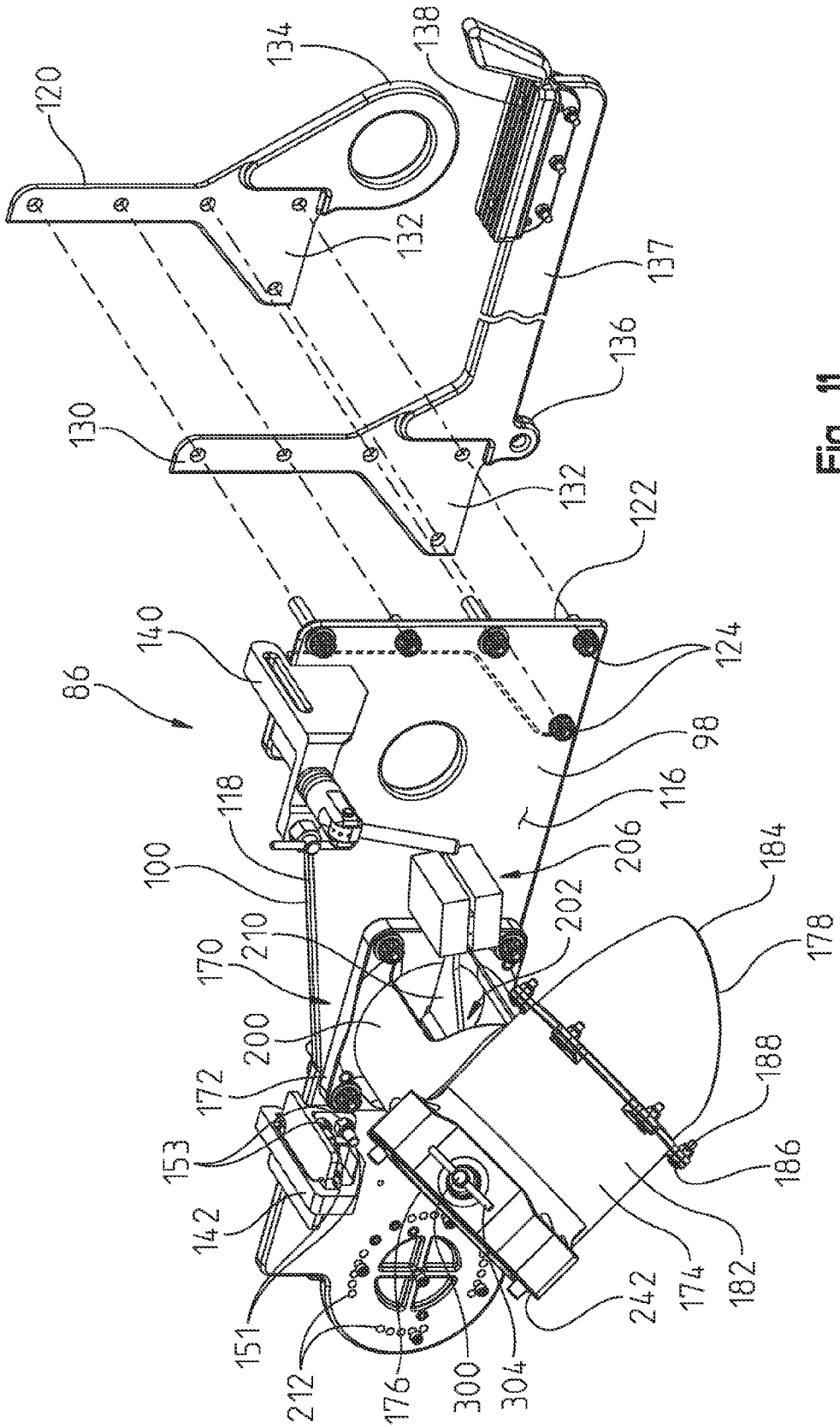
120
134
138
132
137
136
130
132
122
140
124
86
98
116
118
206
100
184
202
210
178
170
200
188
172
153
186
142
174
182
242
151
212
176
300
304

Fig. 11

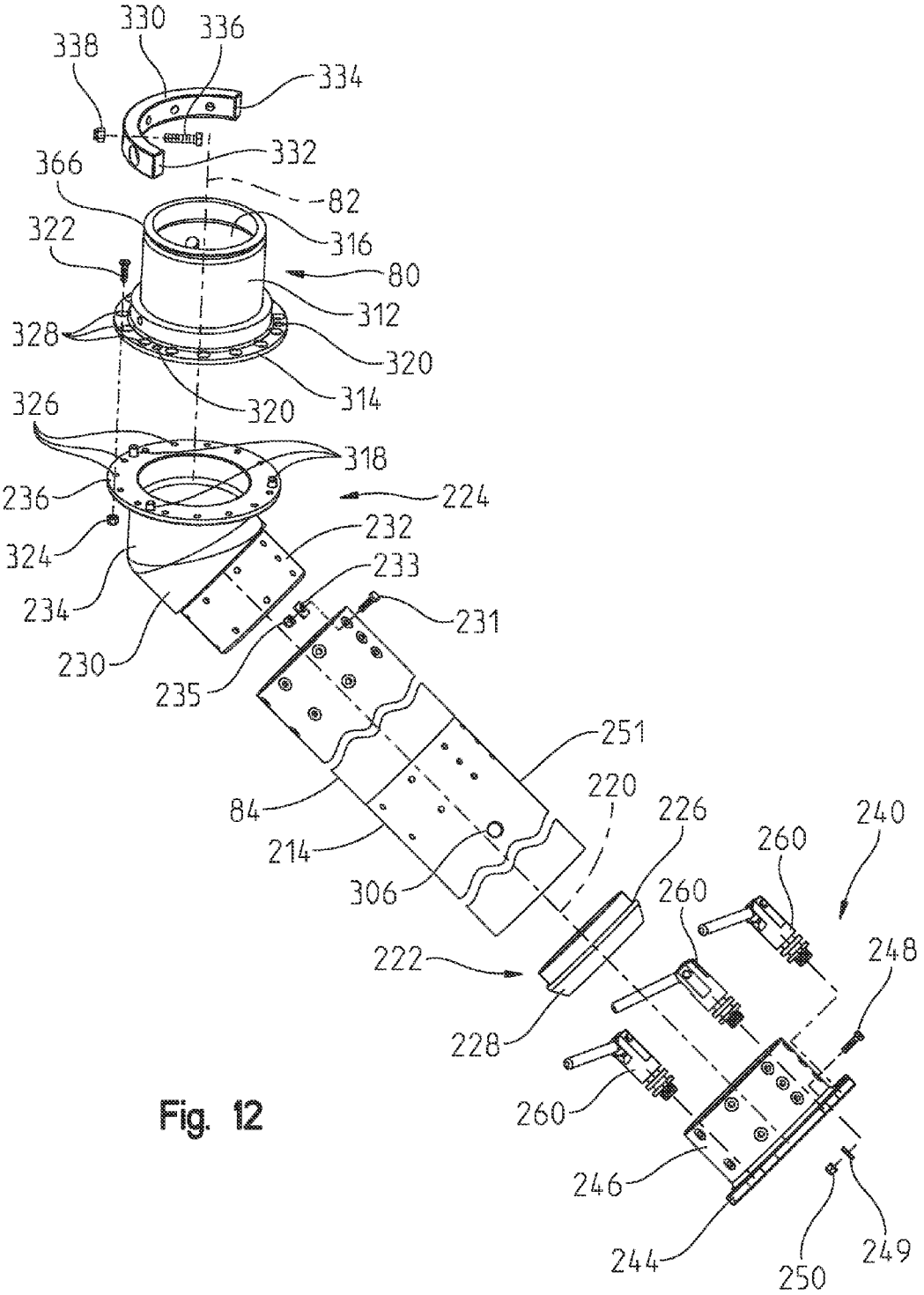
330
336
338
334
332
366
82
322
316
80
312
328
320
314
320
326
318
236
224
232
324
233
234
231
230
235
251
220
84
226
240
214
260
306
260
222
248
228
260
246
244
250
249

Fig. 12

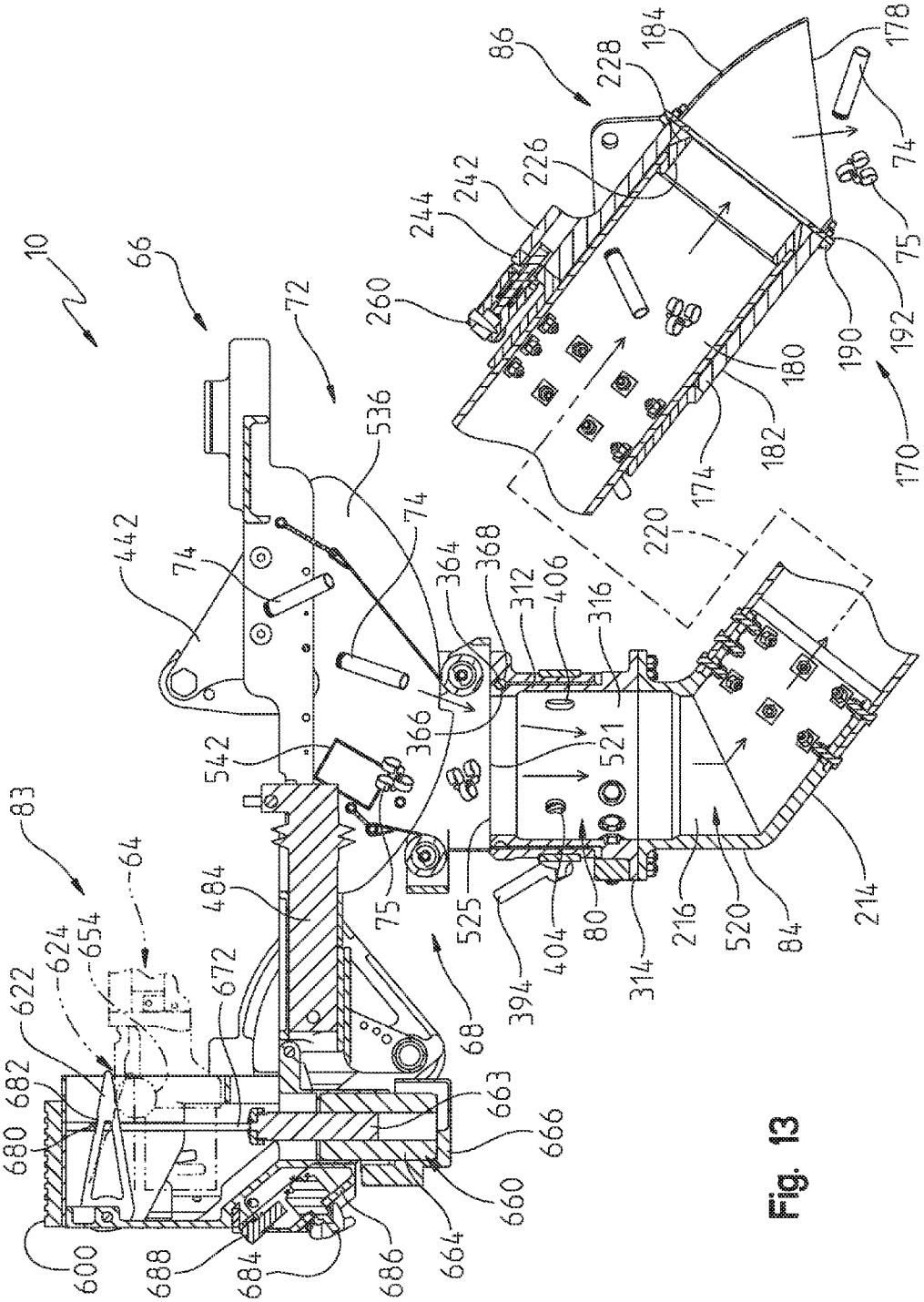
10
66
72
86
228
184
178
74
226
242
244
260
75
192
190
180
182
174
170
220
536
442
74
74
364
368
312
406
316
366
521
542
83
64
484
75
525
394
404
80
314
216
520
84
214
68
624
654
622
672
682
680
663
666
660
664
686
684
688
600

Fig. 13

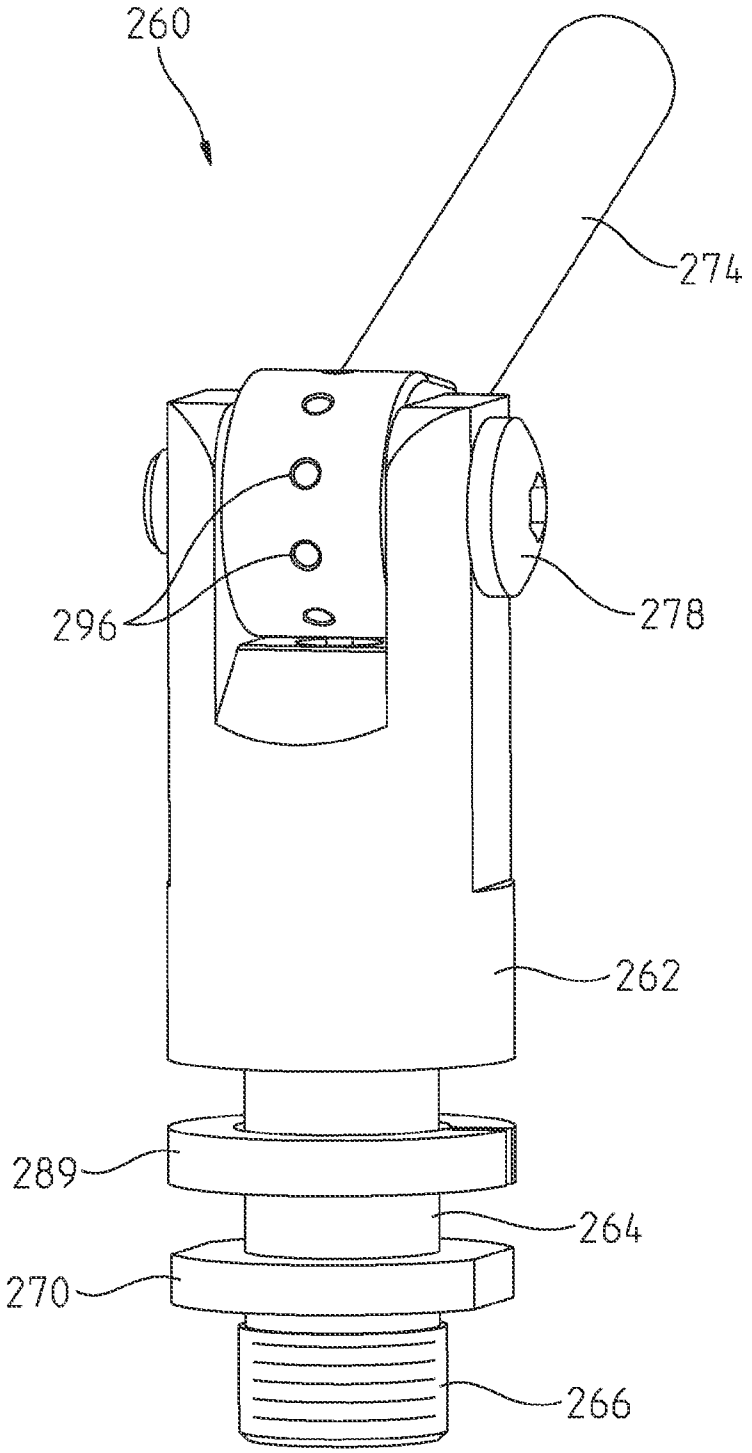

Fig. 14

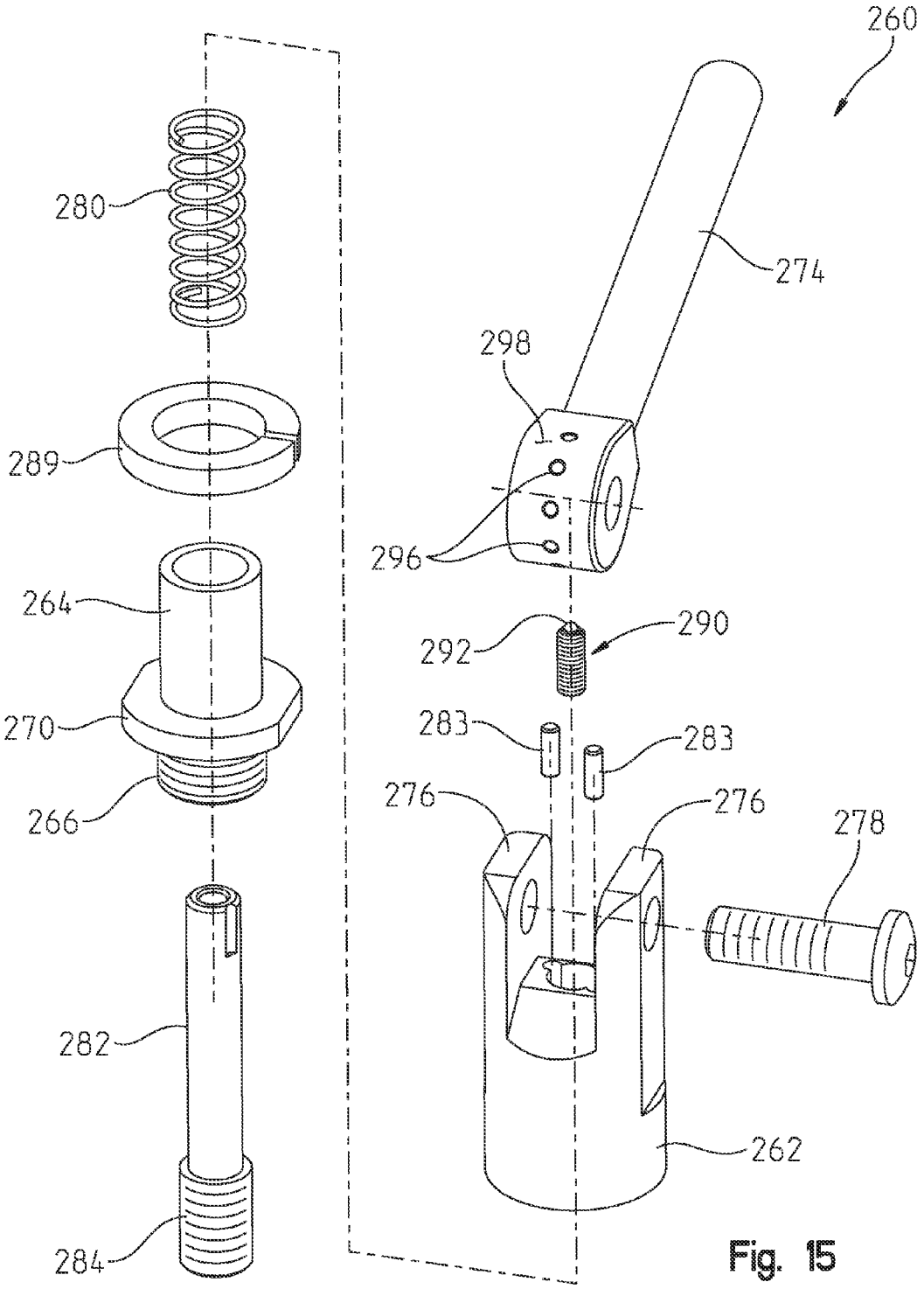
260
280
274
298
289
296
264
292
290
270
283
283
266
276
276
278
282
262
284

Fig. 15

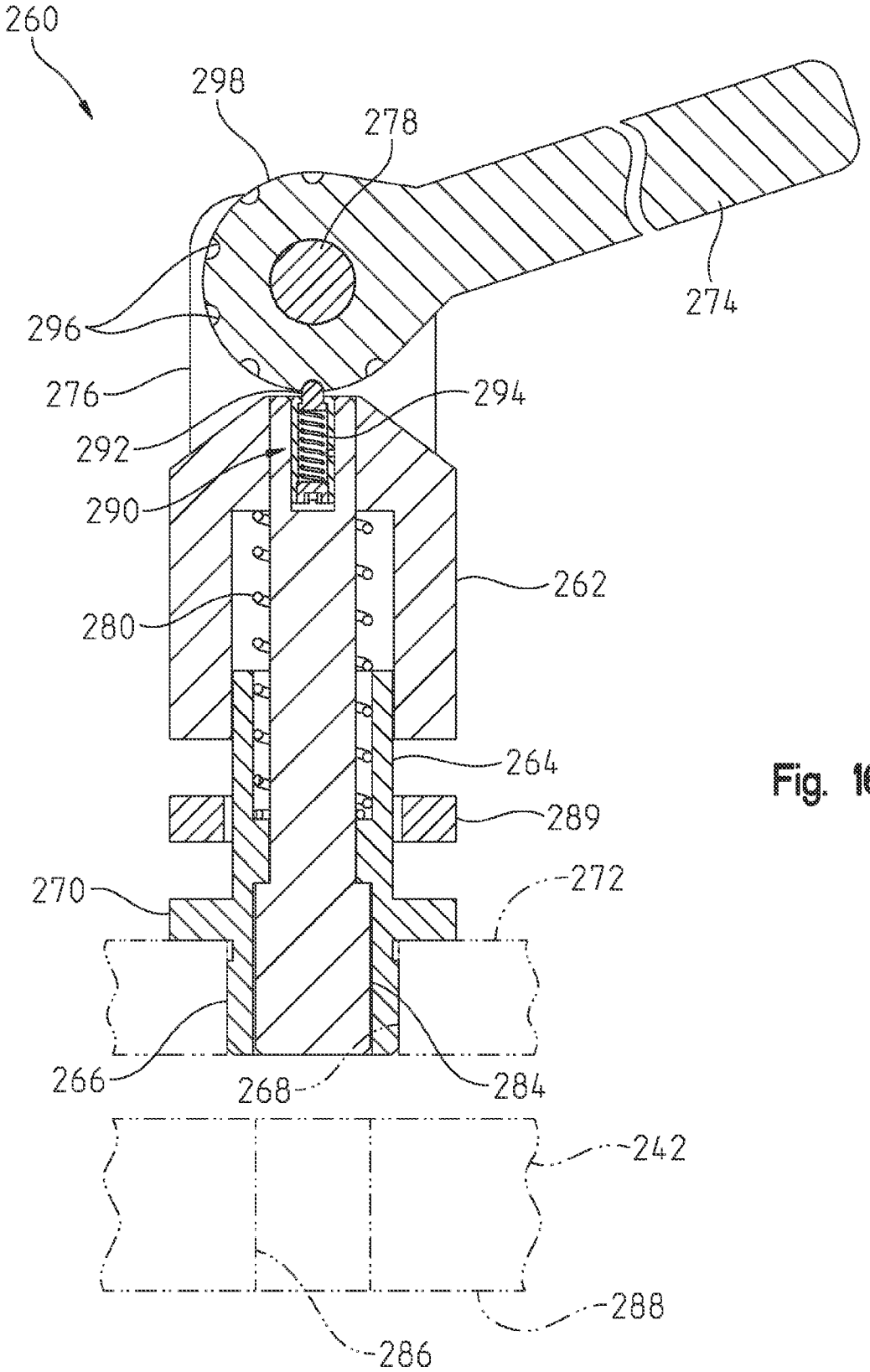
260
298
278
274
296
276
294
292
290
262
280
264
289
270
272
266
268
284
242
288
286

Fig. 16

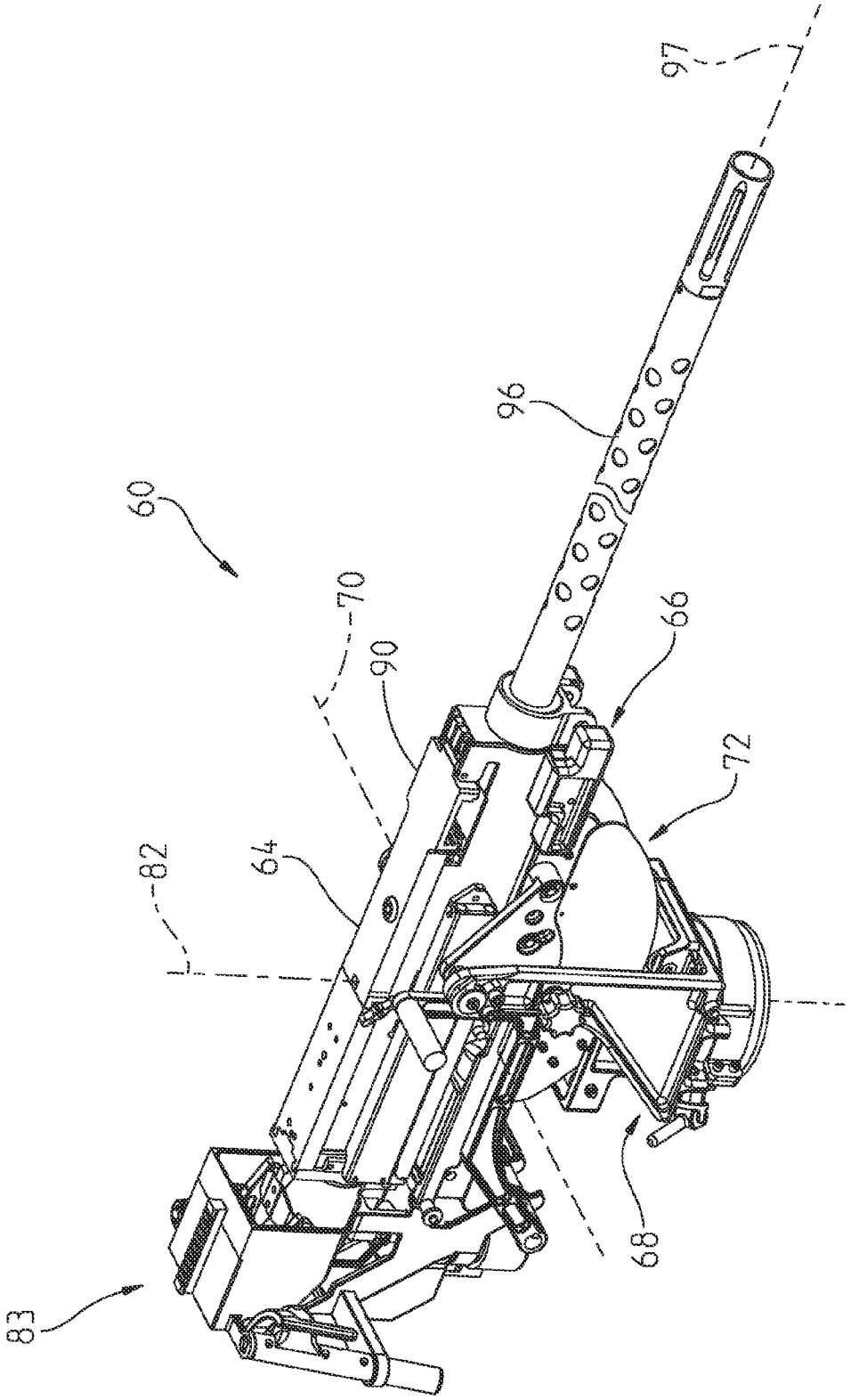

Fig. 17

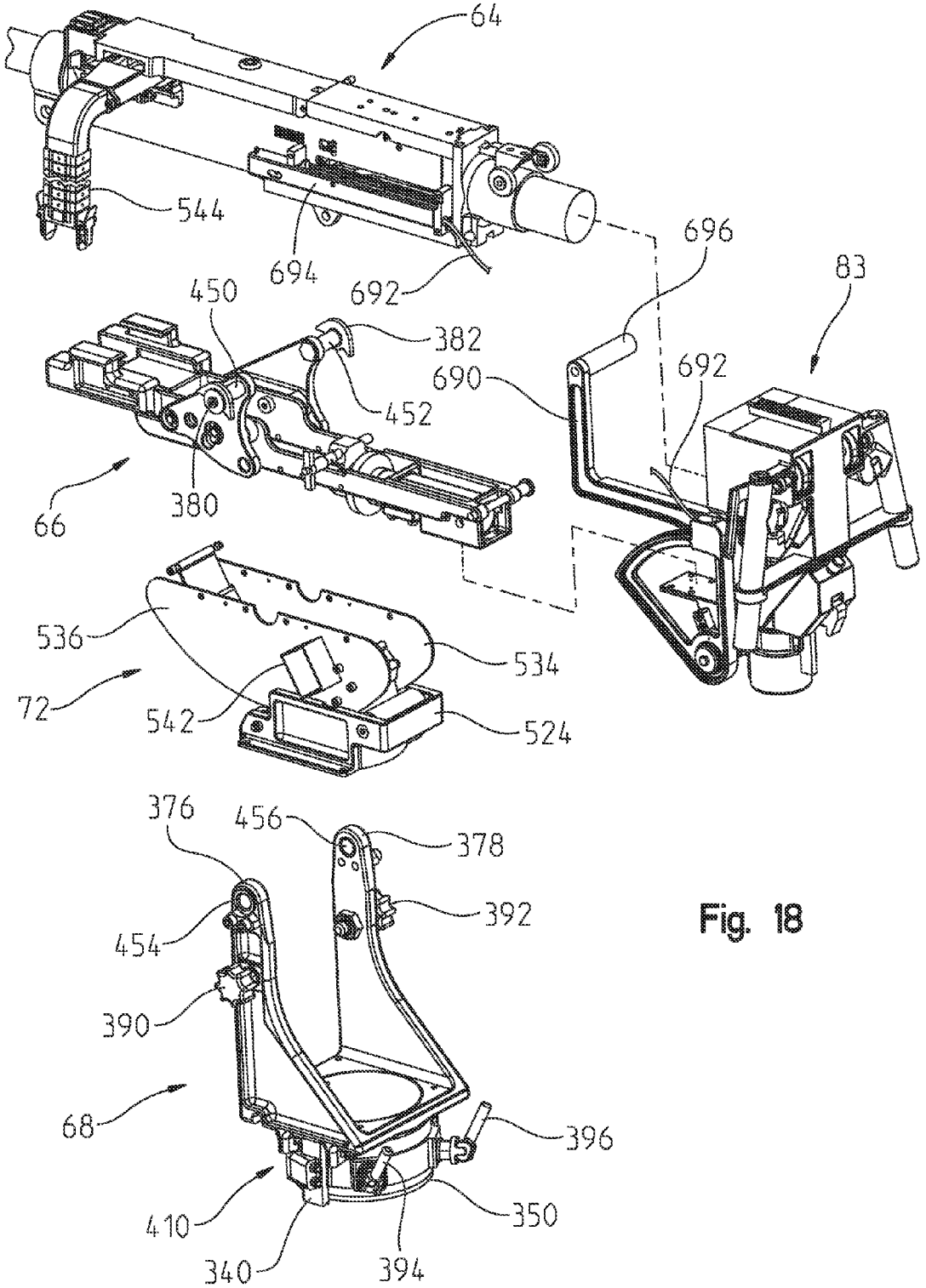
64
544
694
692
696
83
450
382
690
692
452
66
380
536
534
72
542
524
376
456
378
392
454
390
68
396
410
350
340
394

Fig. 18

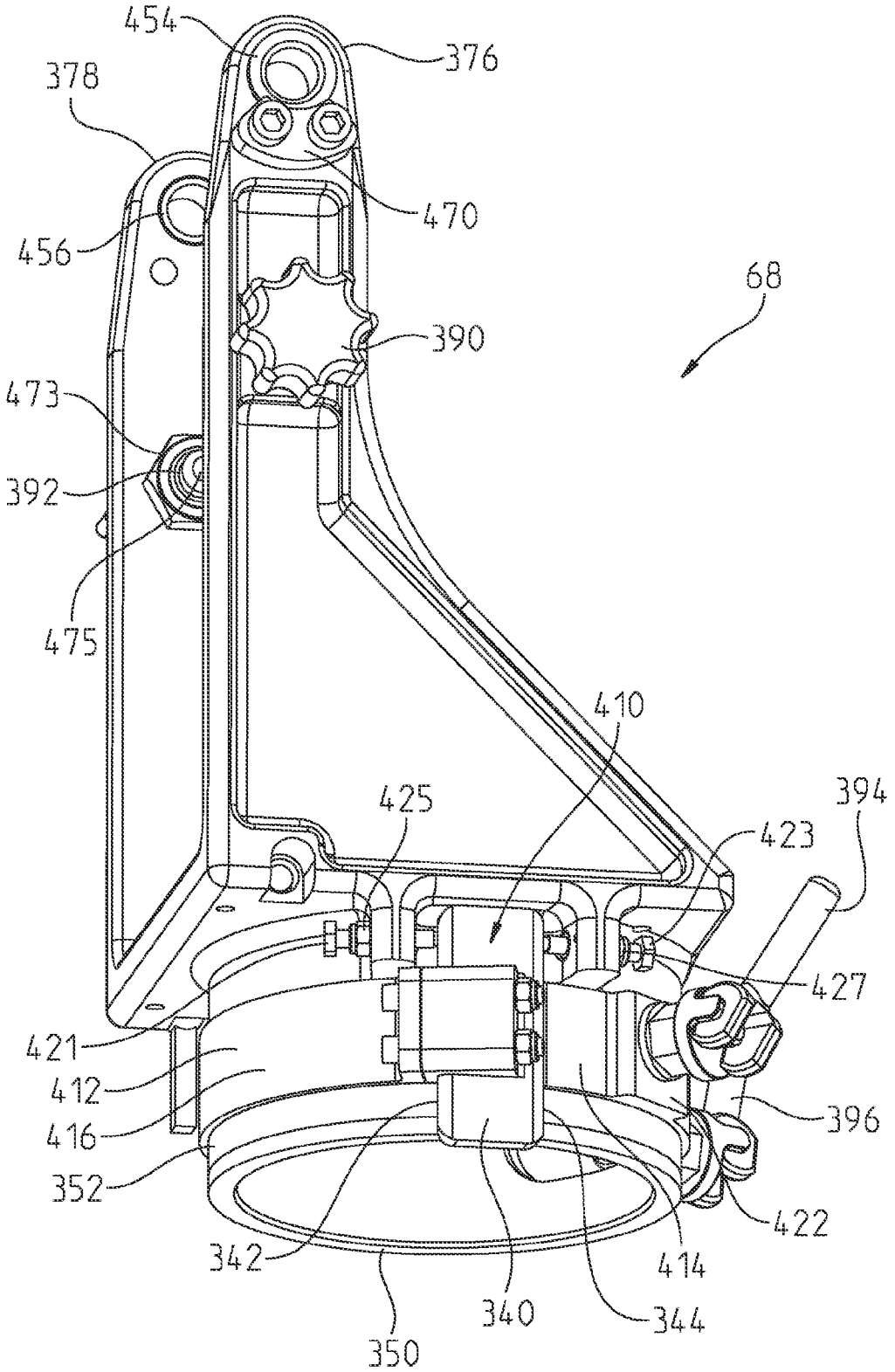
454
376
378
470
456
68
390
473
392
475
410
425
394
423
427
421
412
416
396
352
422
342
414
340
344
350

Fig. 19

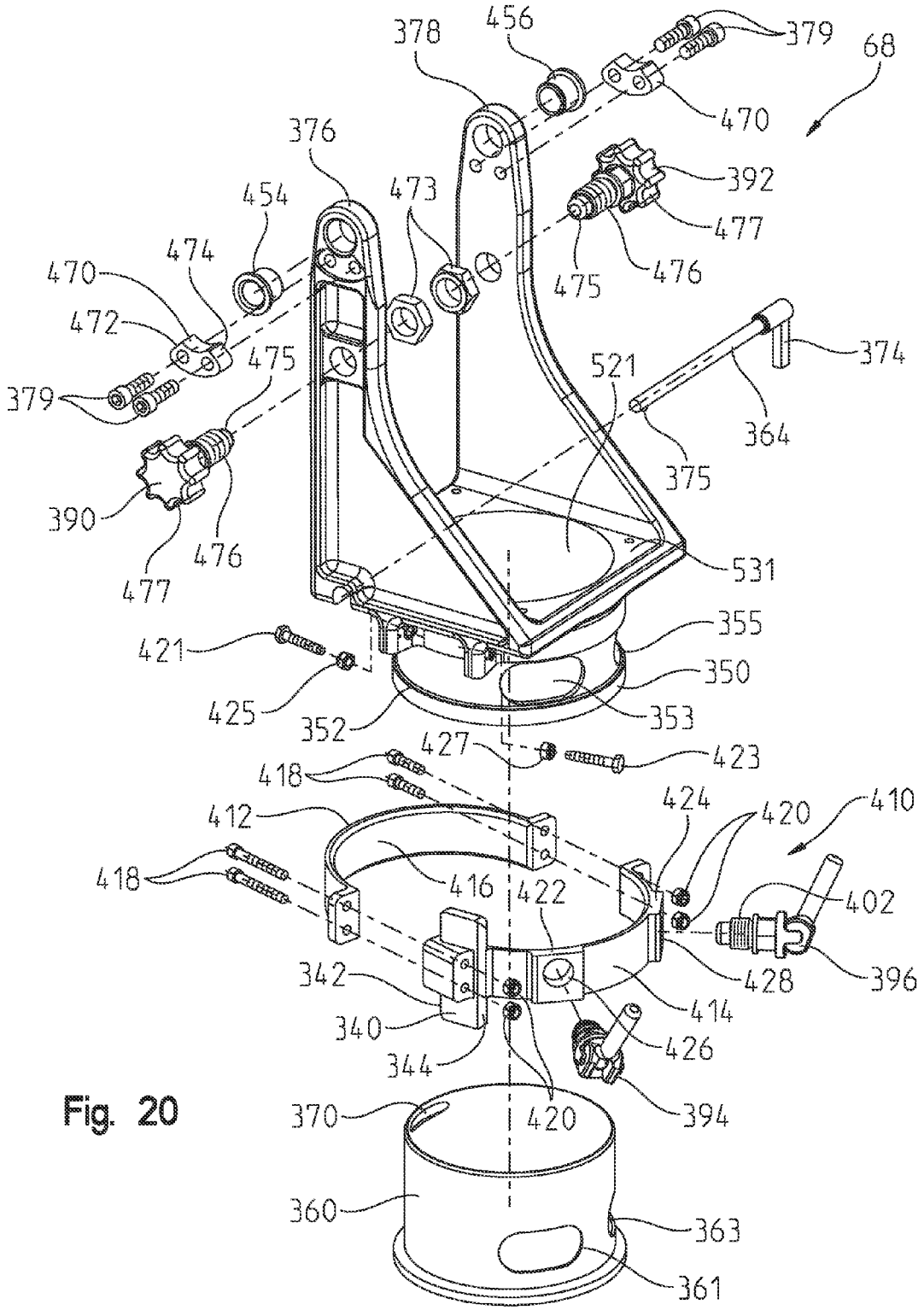
378
456
379
68
470
376
392
454
473
477
474
475
476
470
472
374
475
521
379
364
375
390
476
477
531
355
421
350
425
352
353
427
423
418
424
420
410
412
418
416
422
402
342
428
396
414
340
426
344
394
370
420
360
363
361

Fig. 20

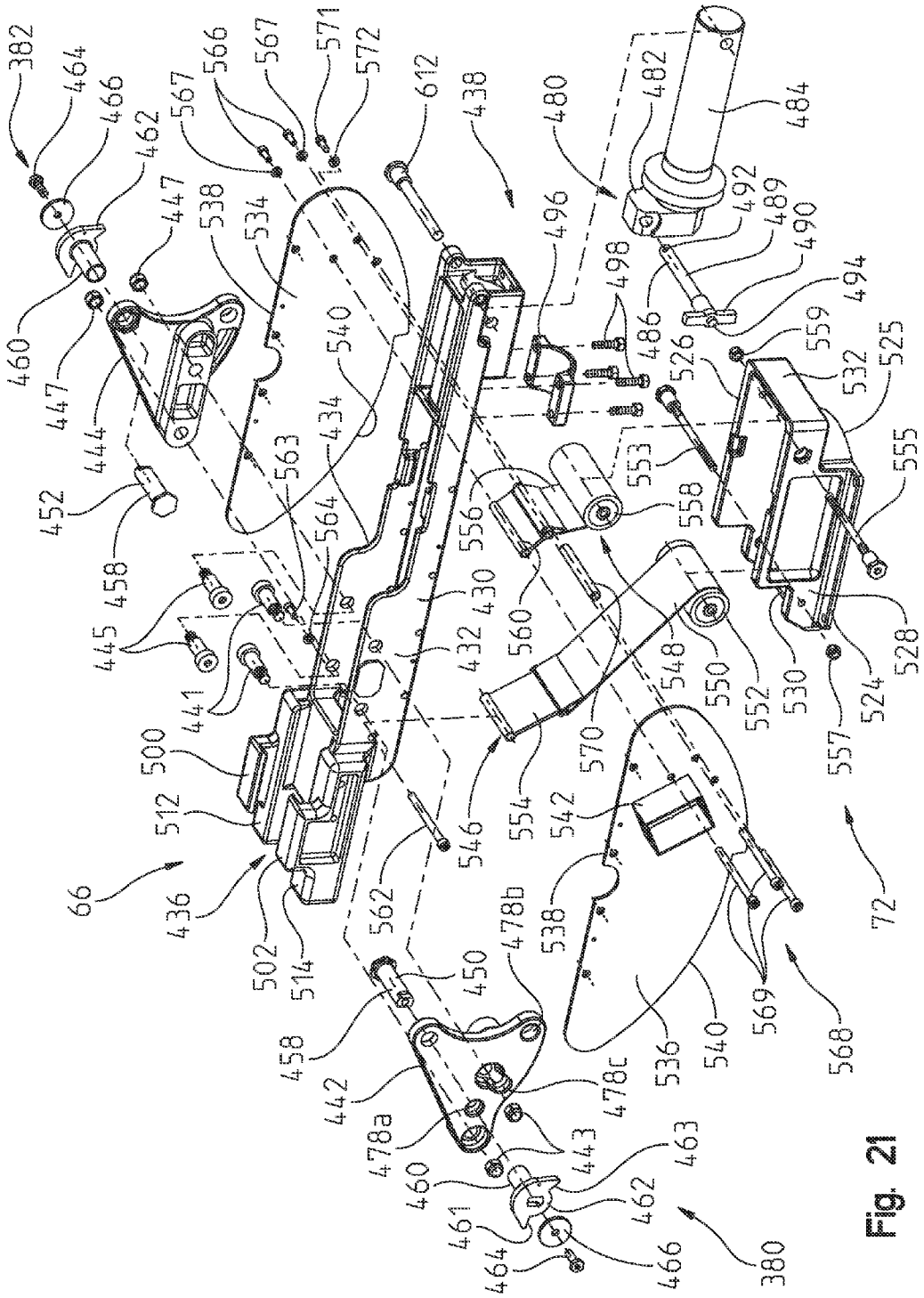
382
464
466
462
460
447
444
452
458
445
441
500
512
66
436
502
514
567
566
567
571
572
612
438
480
482
484
492
489
490
494
496
498
486
538
534
540
434
563
564
430
432
562
546
554
542
538
536
540
569
568
72
556
558
553
560
548
550
552
570
526
559
532
525
555
530
524
528
557
450
478b
458
442
478a
478c
443
460
461
464
463
462
466
380

Fig. 21

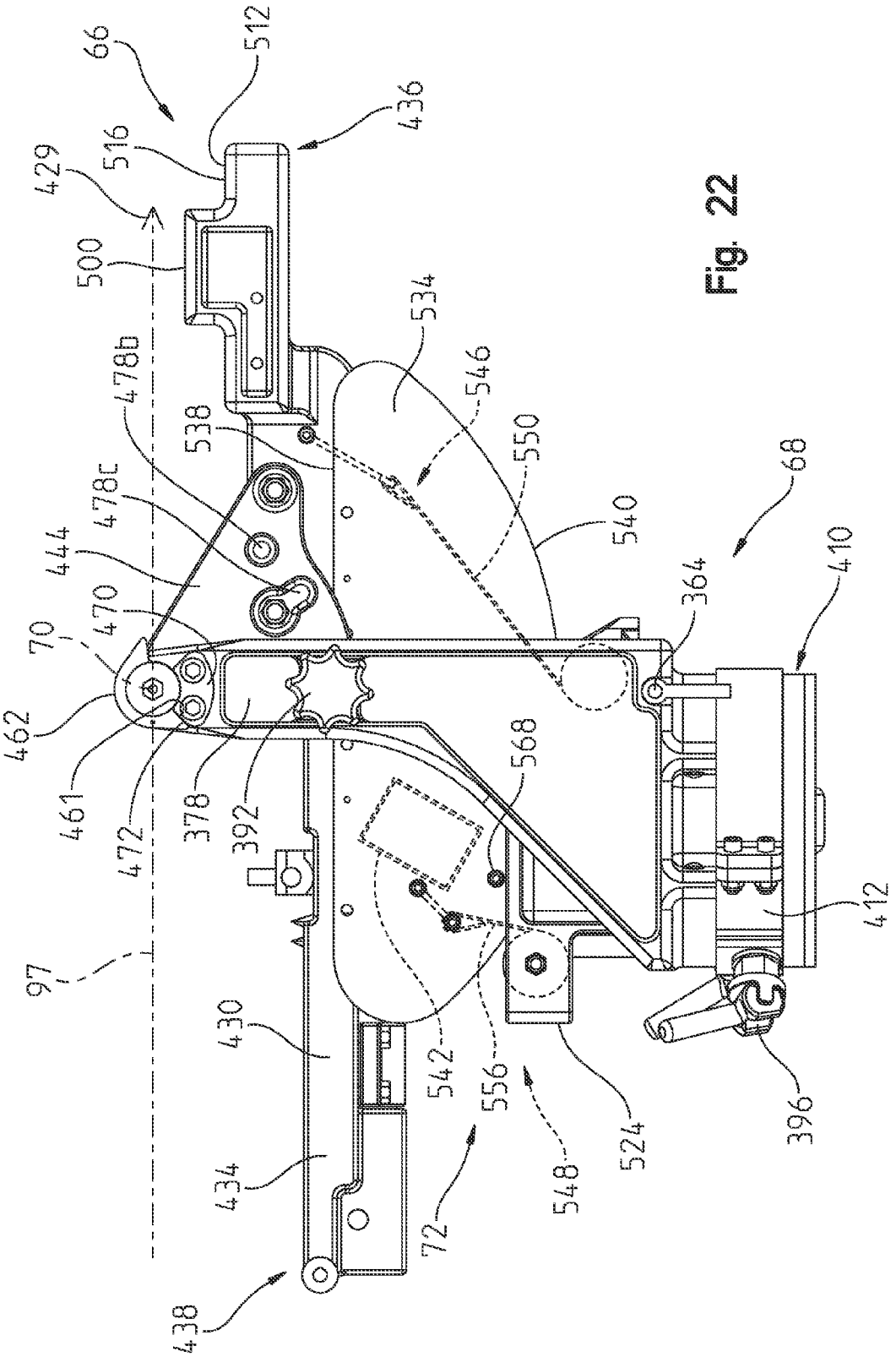
66
512
436
516
429
500
534
546
478b
538
550
478c
444
540
68
410
364
470
70
462
461
472
378
392
568
412
97
430
542
556
524
396
434
548
72
438

Fig. 22

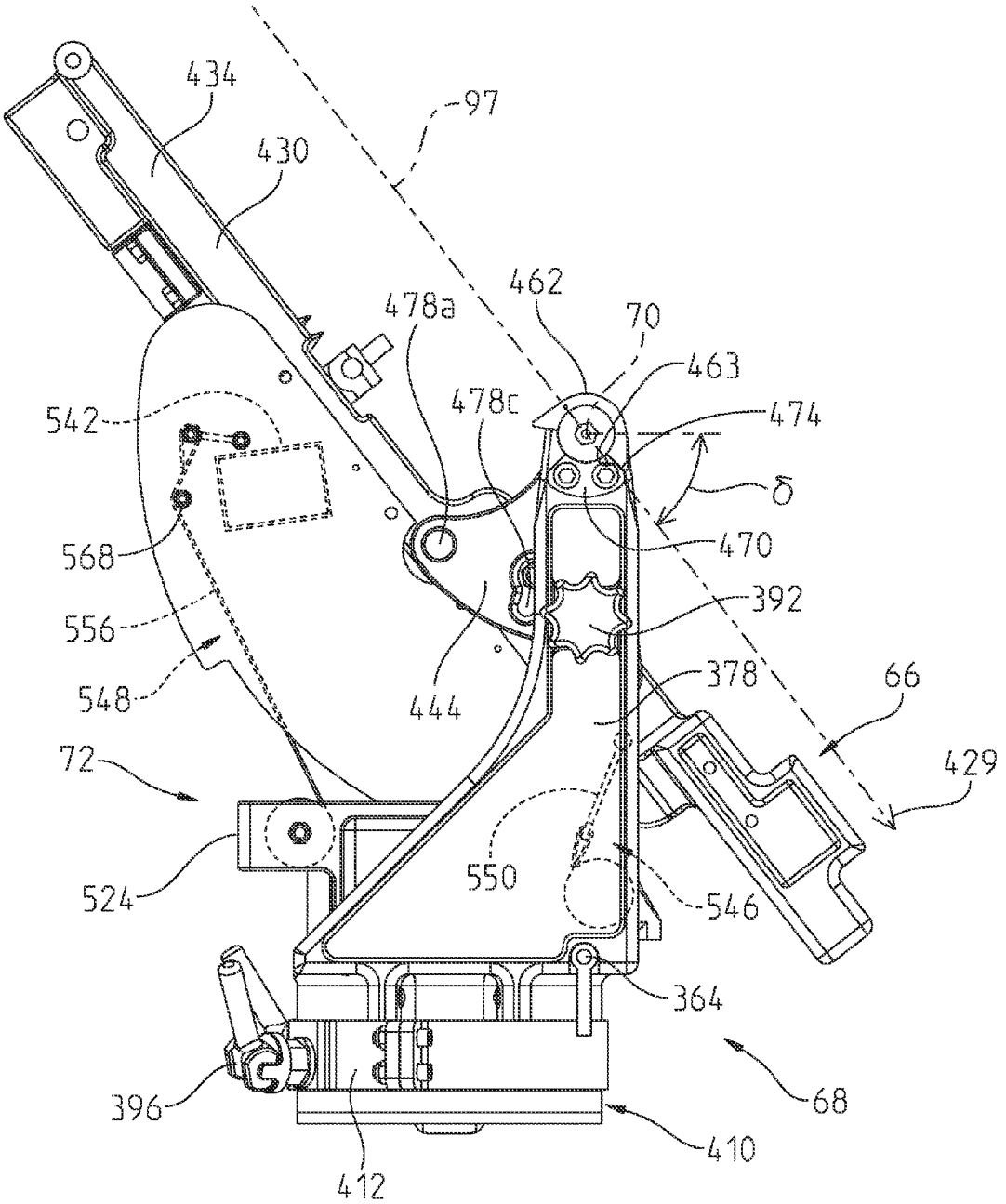
434
430
97
462
478a
70
463
478c
474
542
δ
470
568
392
556
378
66
548
444
429
72
550
524
546
364
396
68
410
412

Fig. 23

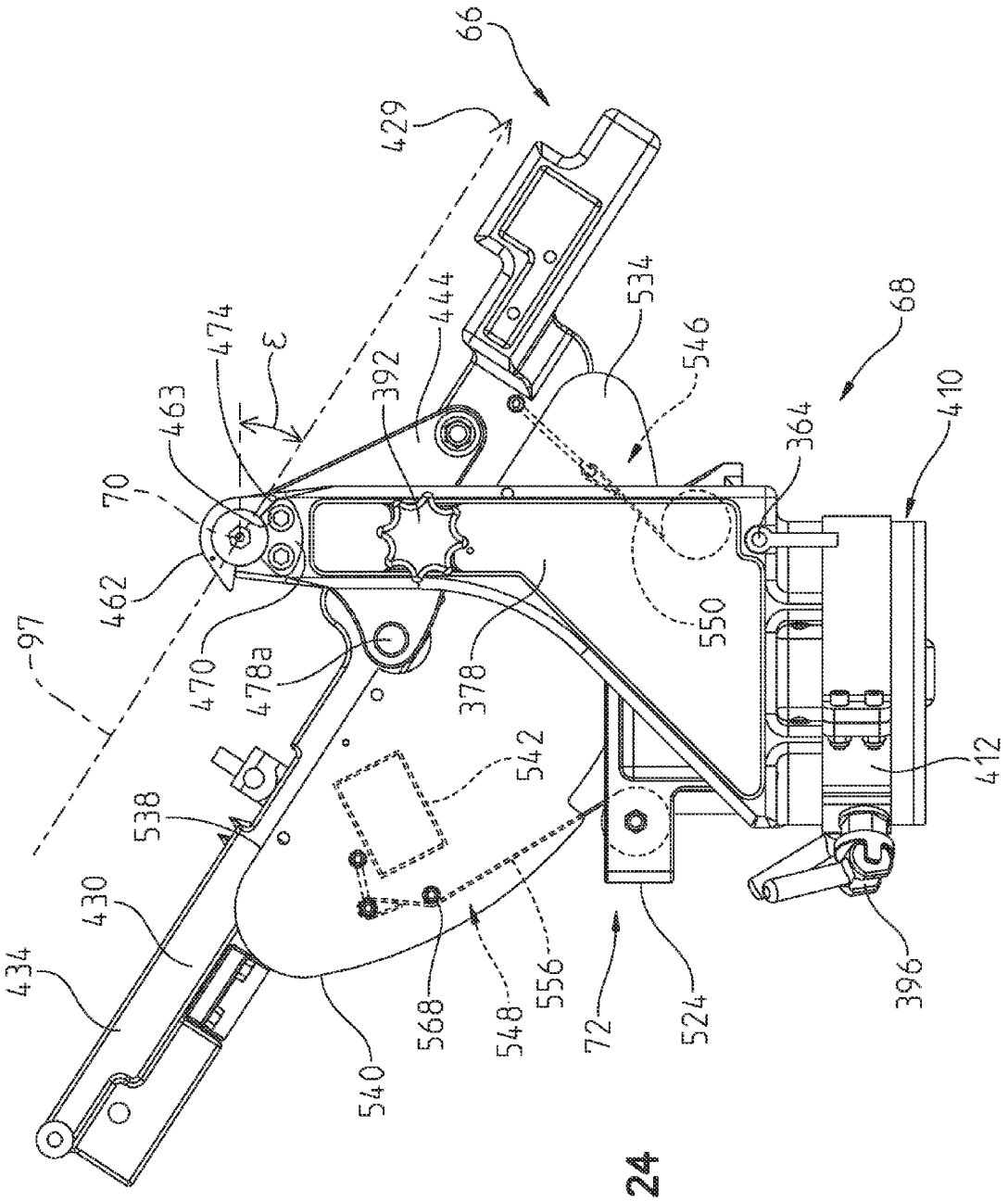
66
429
474
ε
463
70
462
97
470
478a
392
444
534
546
68
364
410
550
378
542
412
538
430
434
540
568
548
556
72
524
396

Fig. 24

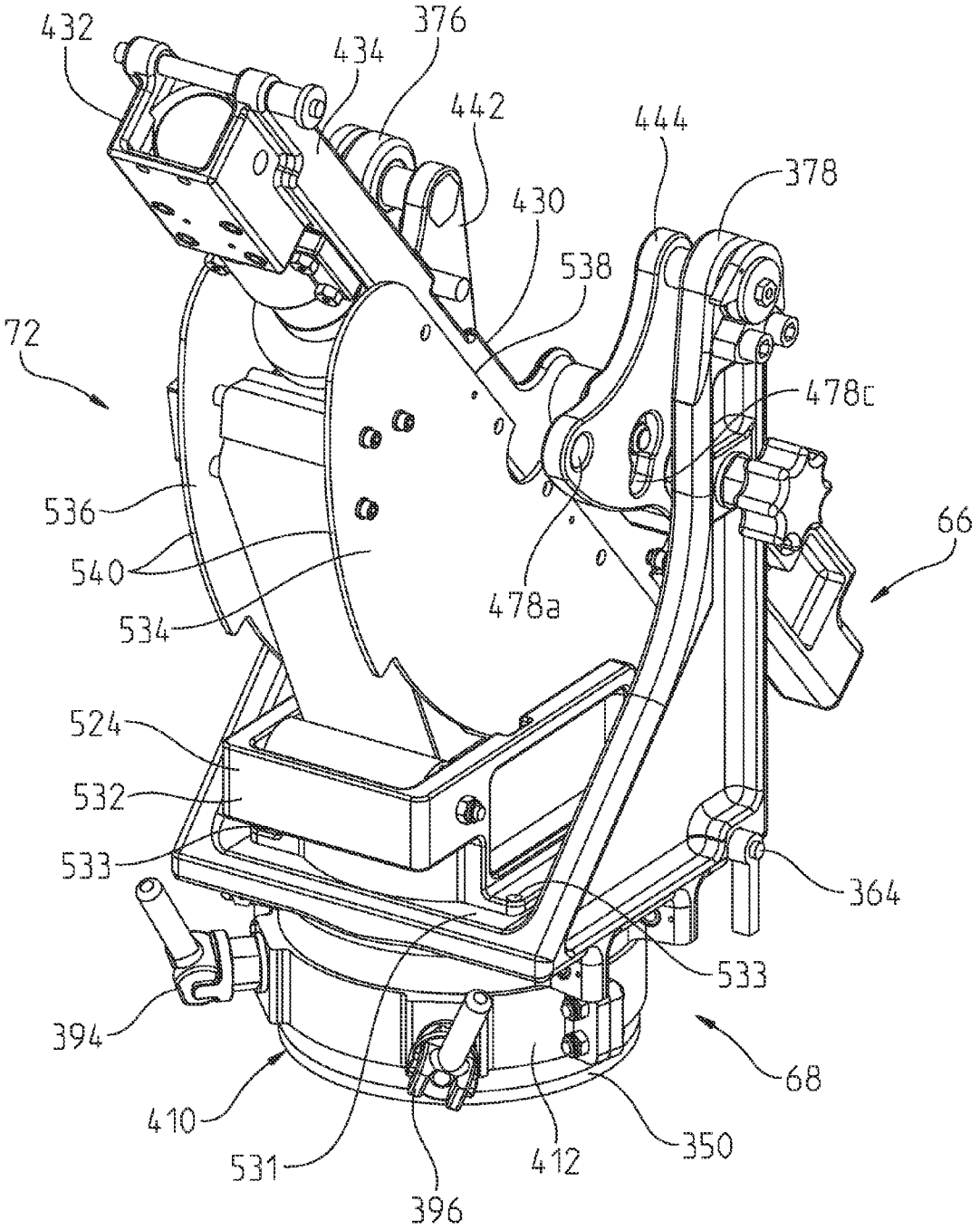
432
434
376
442
444
378
430
538
72
478c
536
66
540
478a
534
524
532
533
364
533
394
68
410
350
531
412
396

Fig. 25

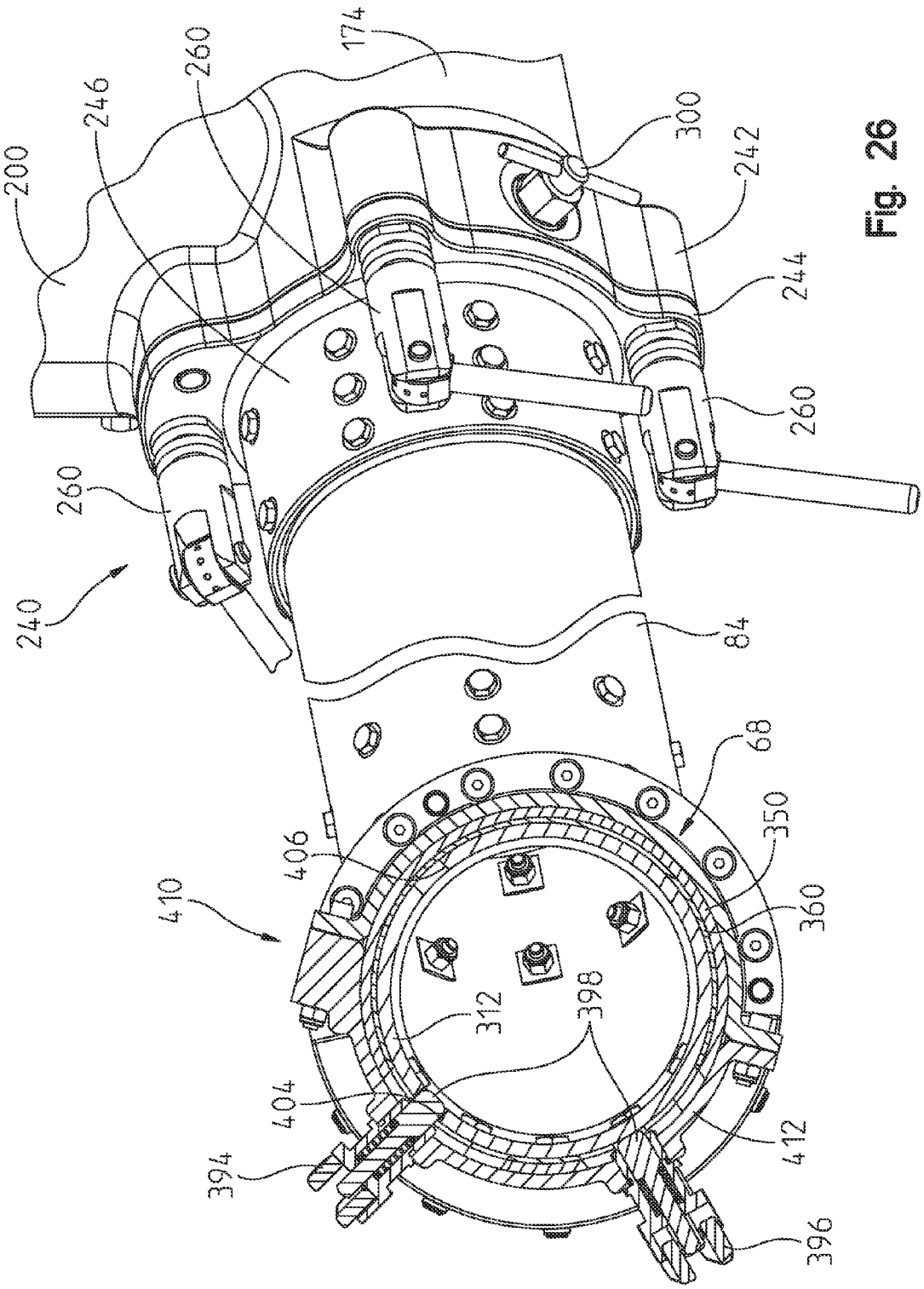
200
246
260
174
300
242
244
260
260
240
84
68
350
360
406
410
312
398
404
394
412
396

Fig. 26

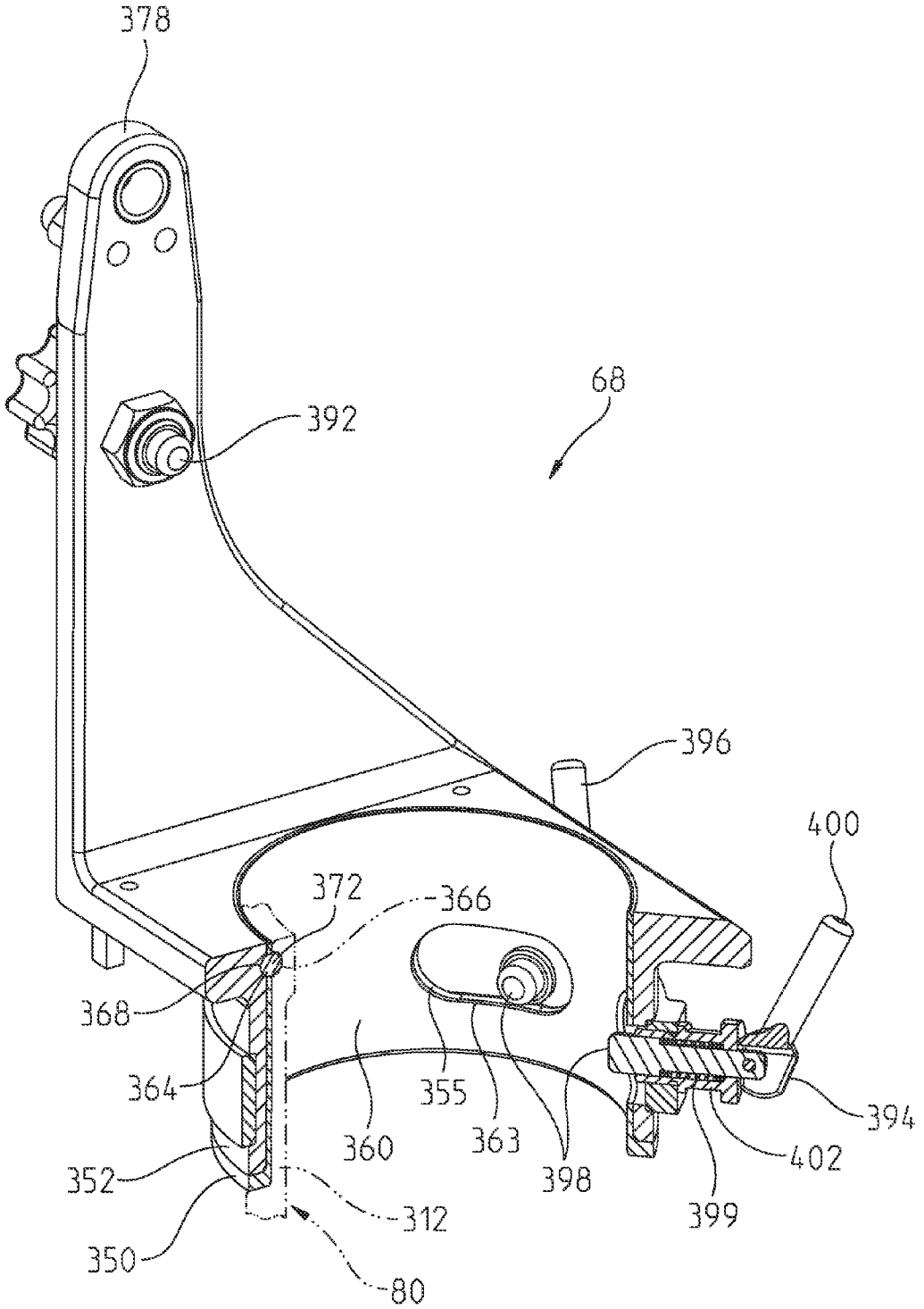
378
392
68
396
400
372
366
368
364
355
360
363
398
394
402
352
312
399
350
80

Fig. 27

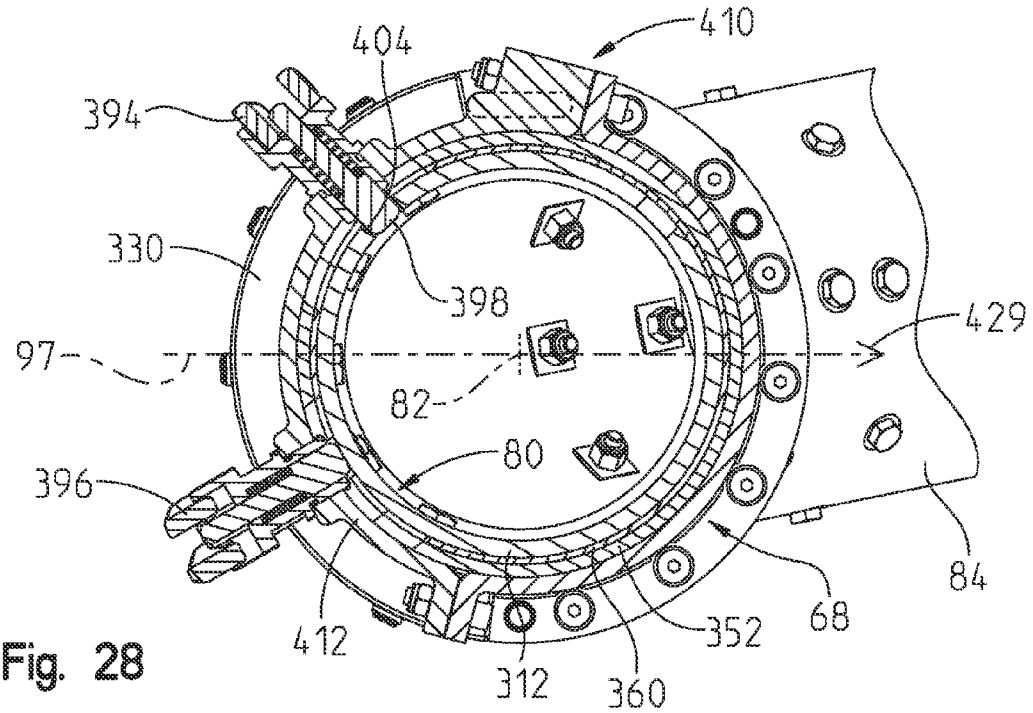
410
404
394
330
398
429
97
82
80
396
84
68
352
412
312
360

Fig. 28

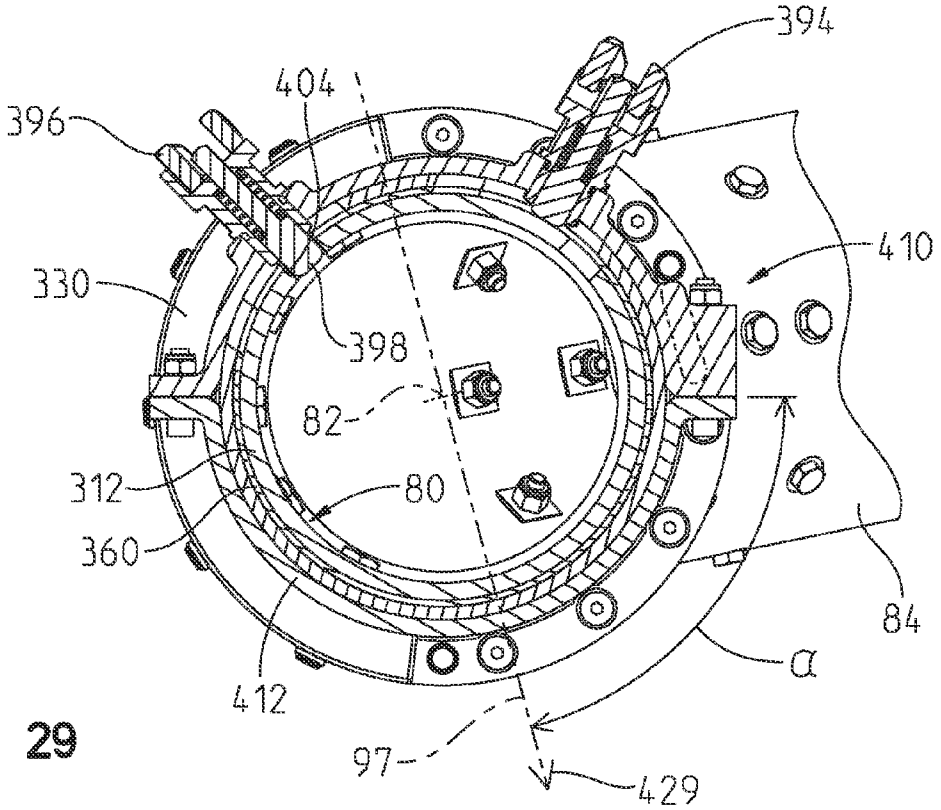
394
404
396
410
330
398
82
312
80
360
84
α
412
97
429

Fig. 29

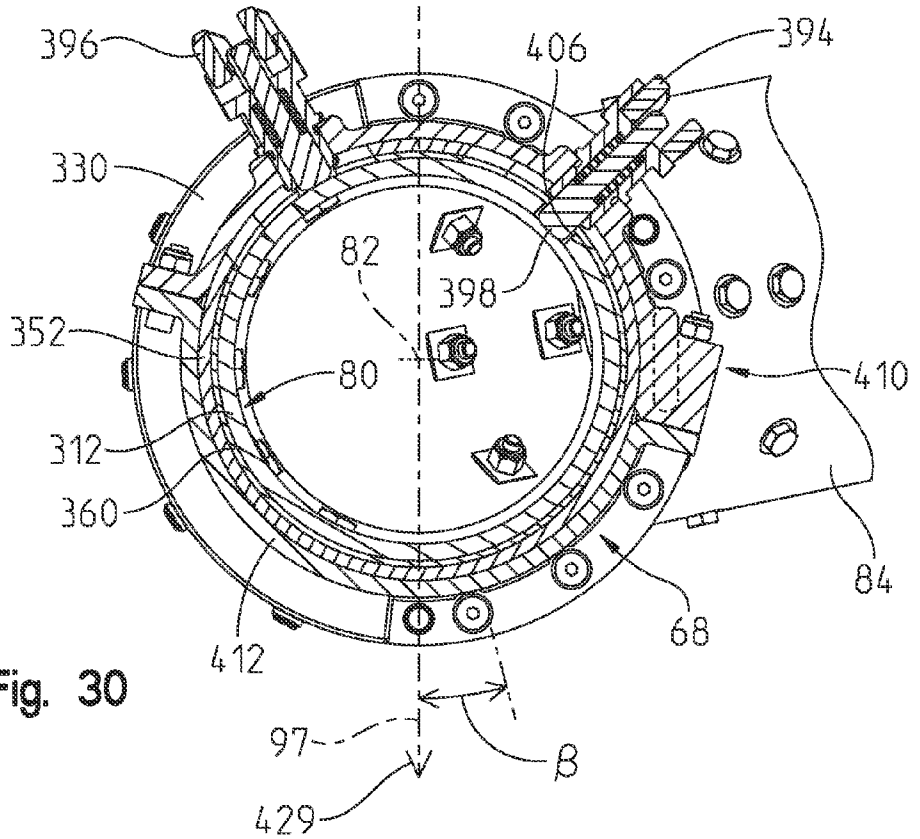
396
406
394
330
82
398
352
80
410
312
360
84
68
412
97
β
429

Fig. 30

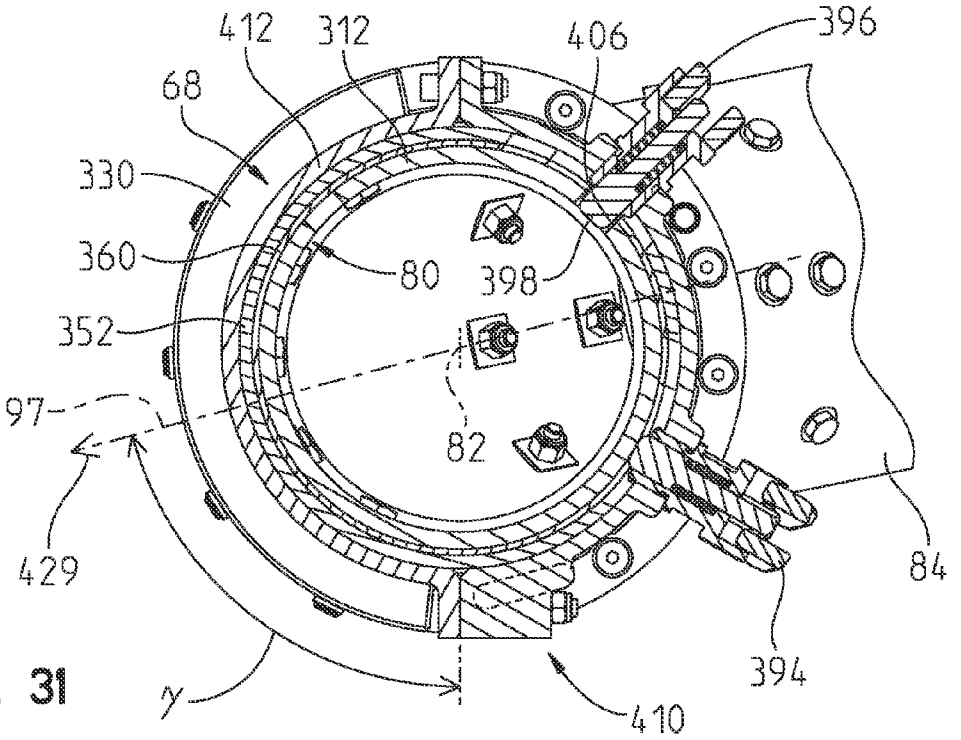
412
312
406
396
68
330
360
80
398
352
97
82
429
84
394
γ
410

Fig. 31

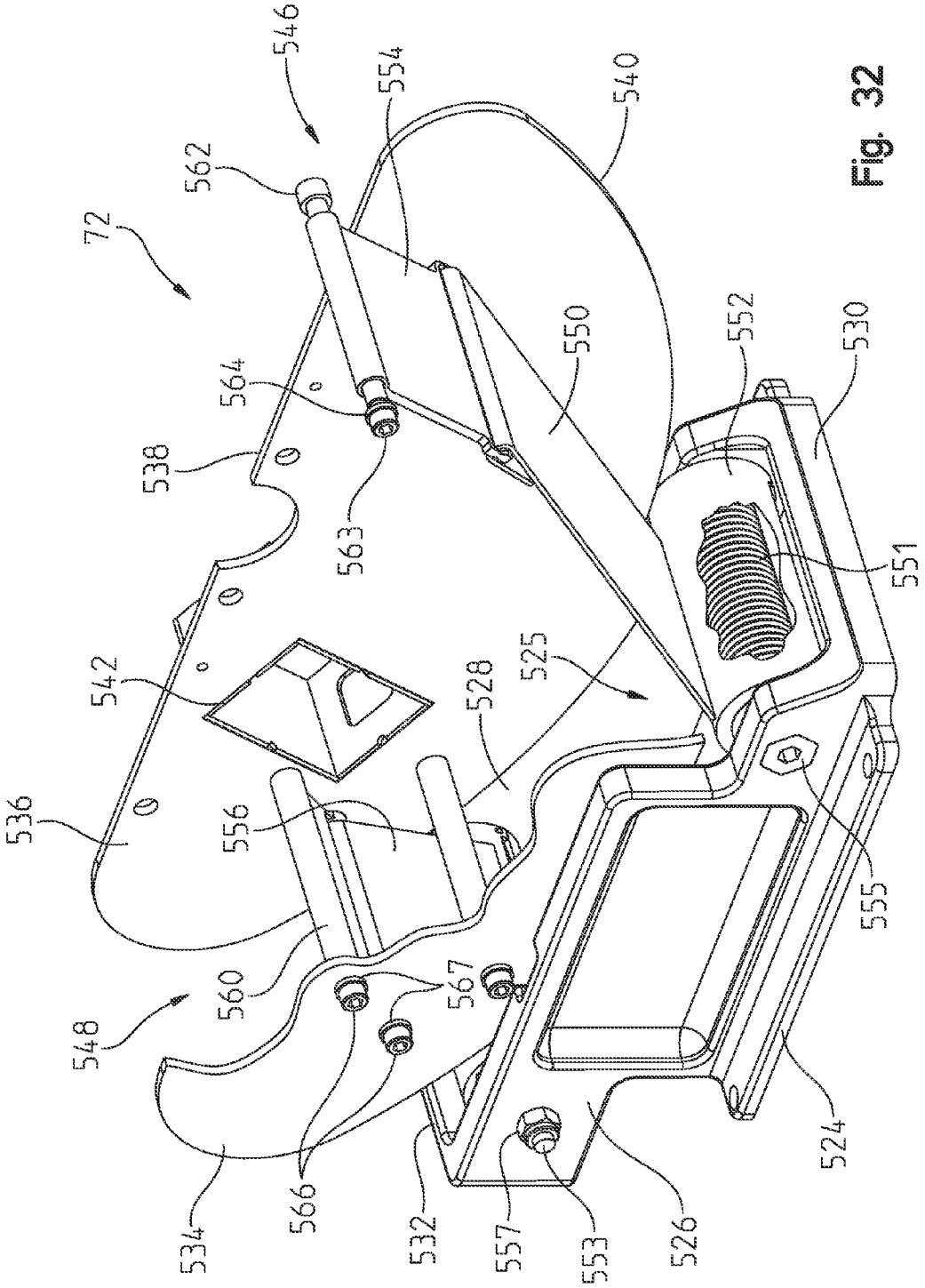
546
554
540
562
72
550
552
530
564
538
563
551
542
528
525
536
556
555
560
567
548
566
524
534
532
557
553
526

Fig. 32

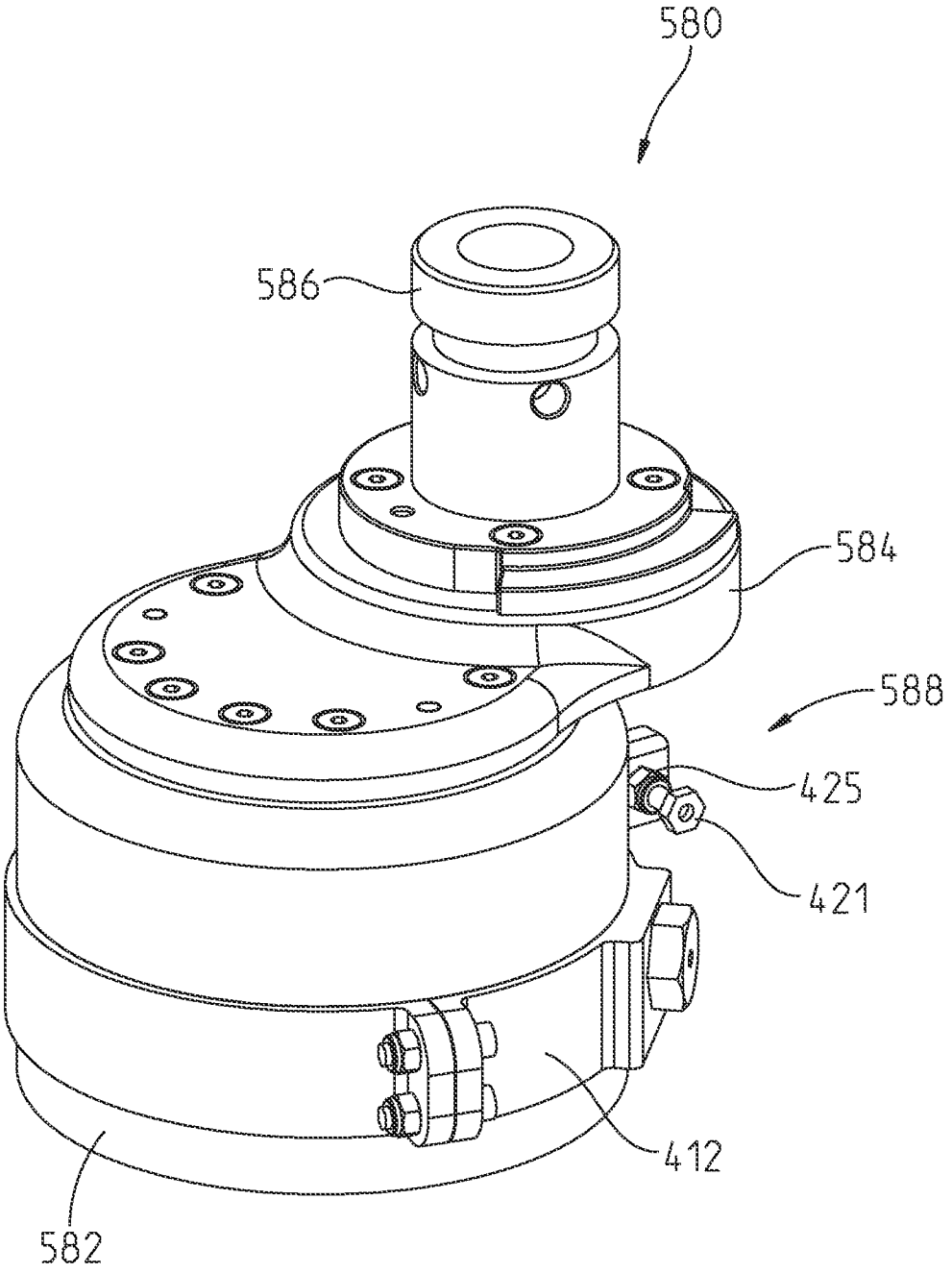

Fig. 33

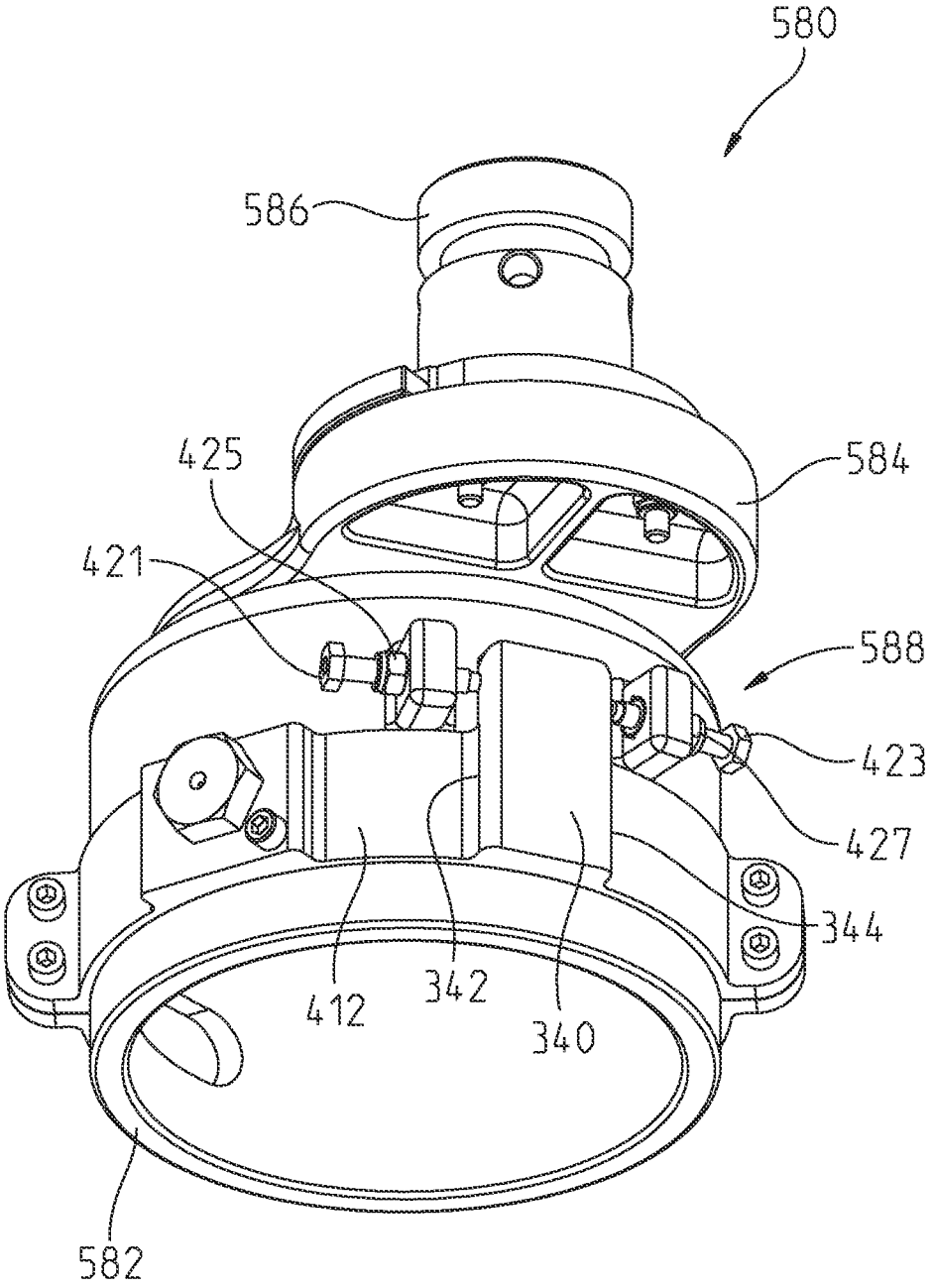

Fig. 34

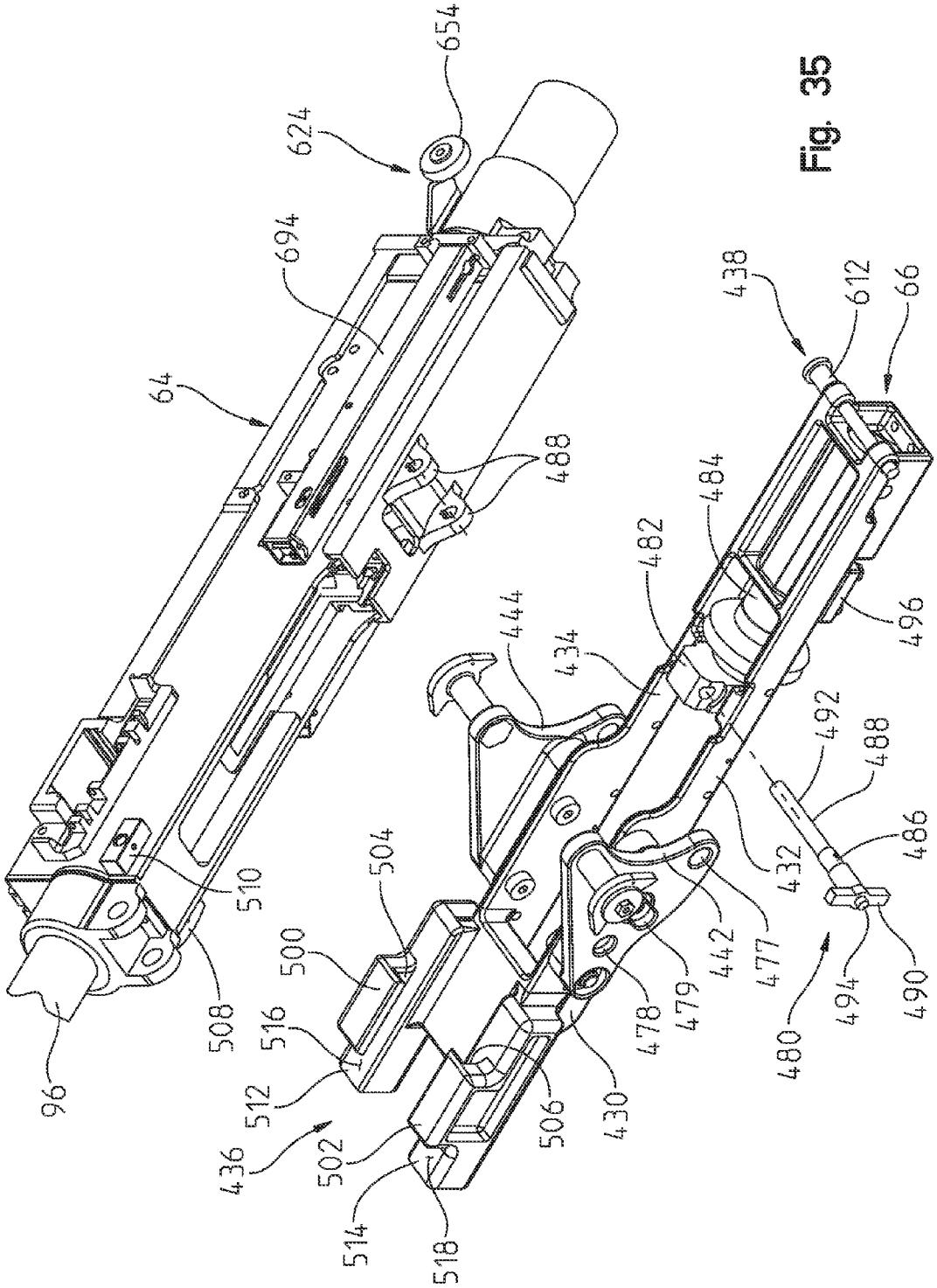
654
624
694
64
488
510
508
96
504
500
516
512
436
502
514
518
506
430
444
434
482
484
438
612
66
496
492
488
486
432
442
477
479
478
480
494
490

Fig. 35

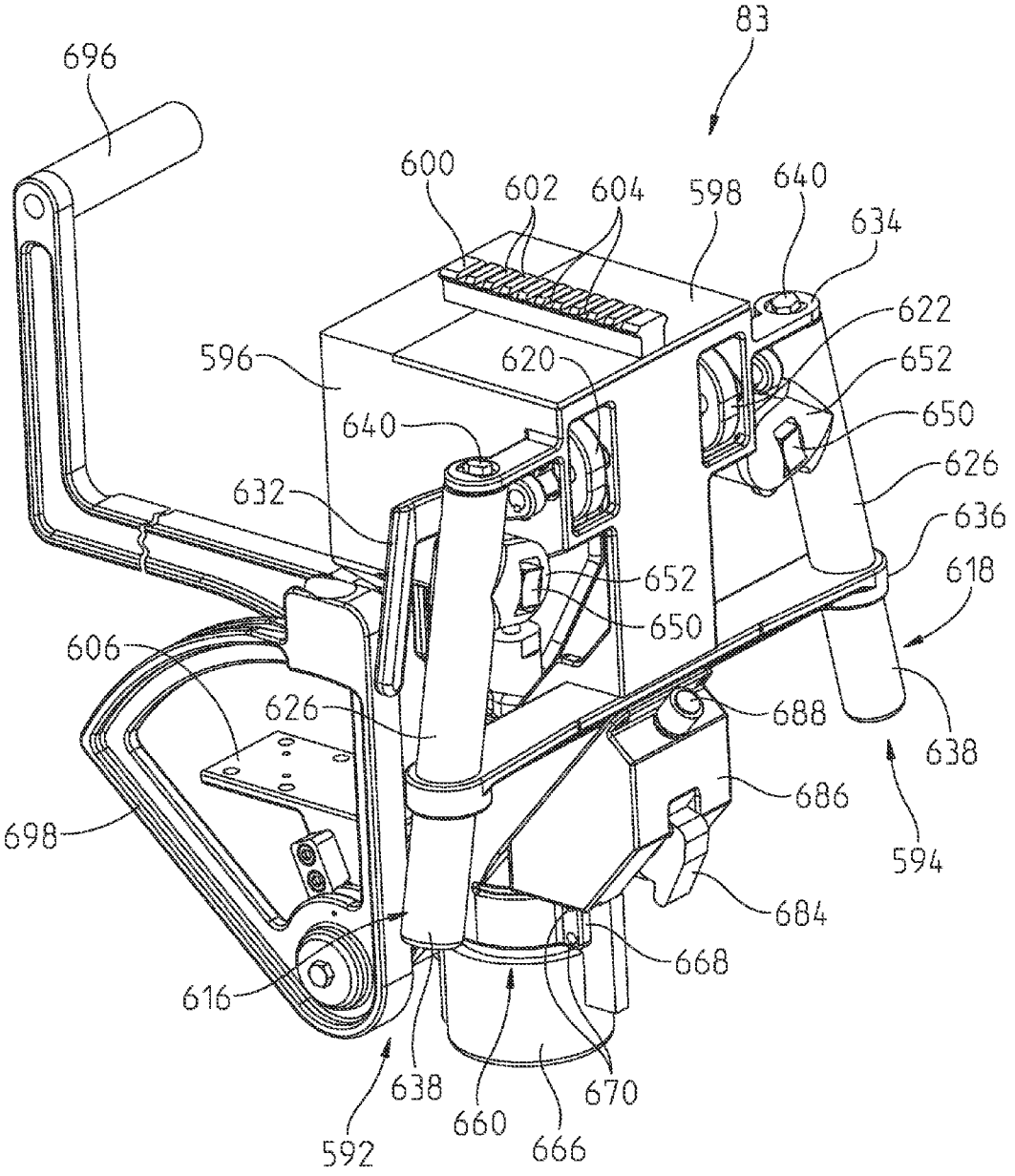
83
696
600
602
604
598
640
634
622
596
620
652
650
640
626
632
636
652
618
650
606
626
688
638
686
698
594
684
668
616
638
670
660
592
666

Fig. 36

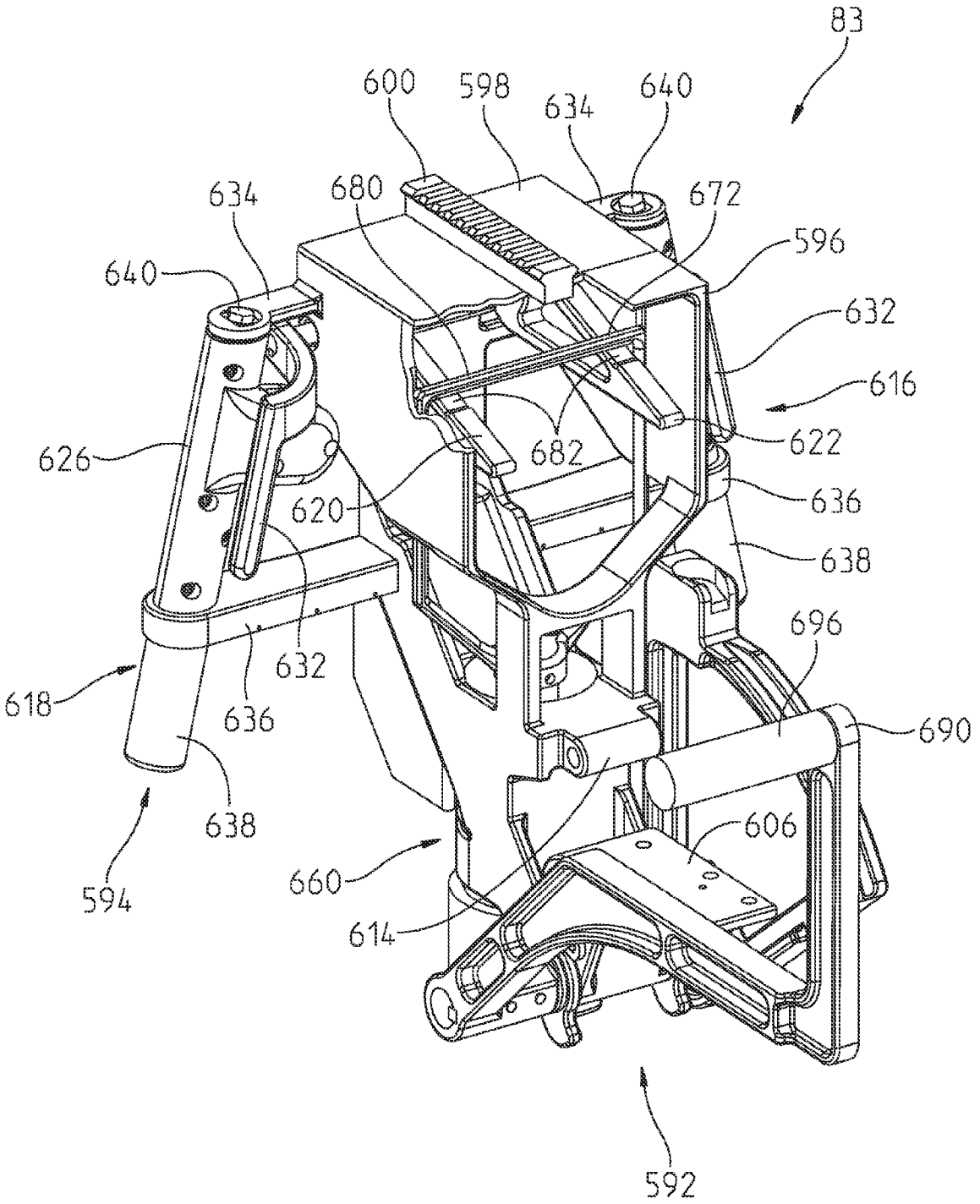
83
600
598
634
640
634
680
672
596
640
632
616
682
622
626
620
636
638
696
632
618
636
690
638
606
660
594
614
592

Fig. 37

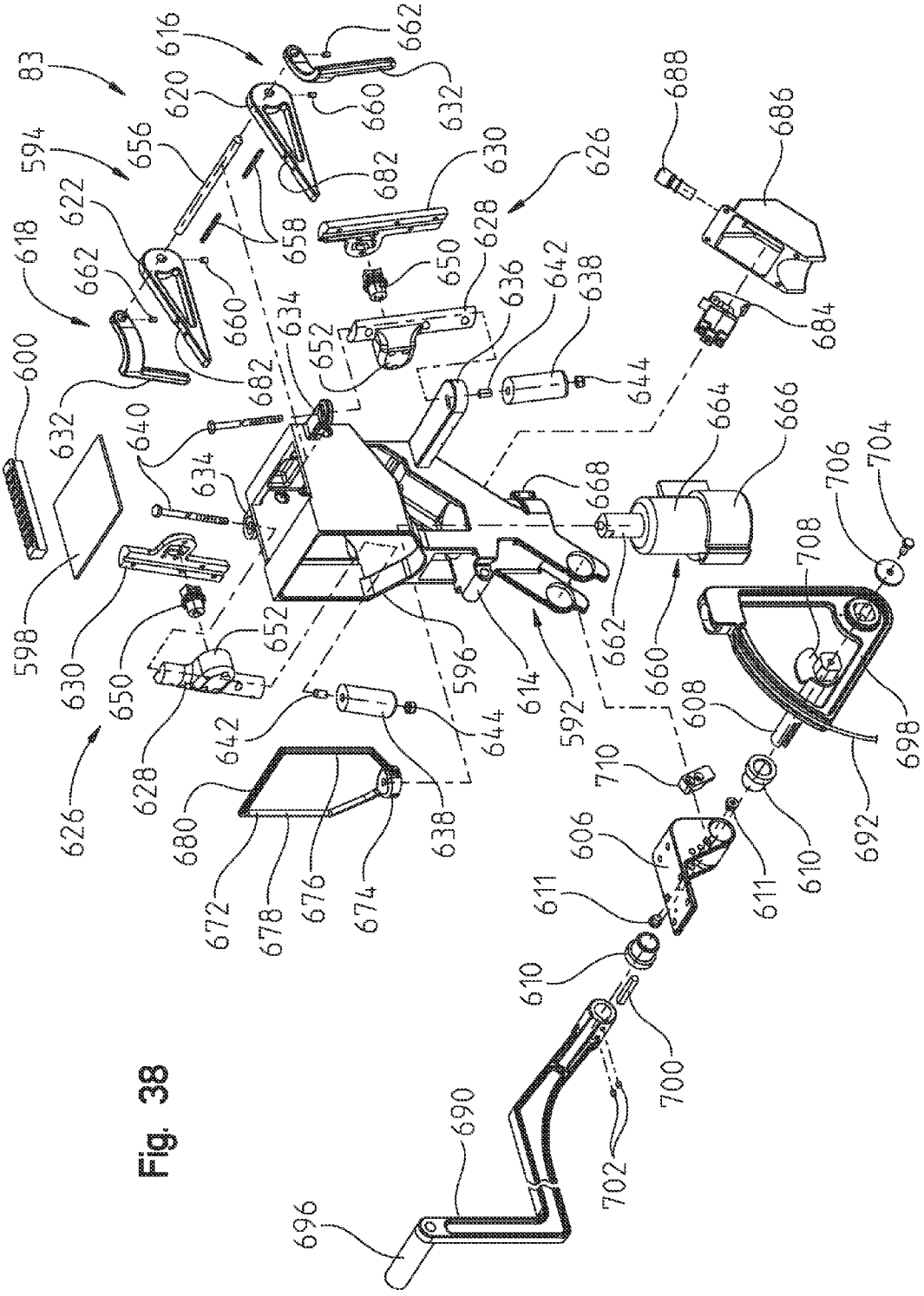
83
594
616
618
620
622
626
628
630
632
634
636
638
640
642
644
650
652
656
658
660
662
664
666
668
674
676
678
680
682
684
686
688
690
692
696
698
700
702
704
706
708
710
592
596
598
600
606
608
610
611
614

Fig. 38

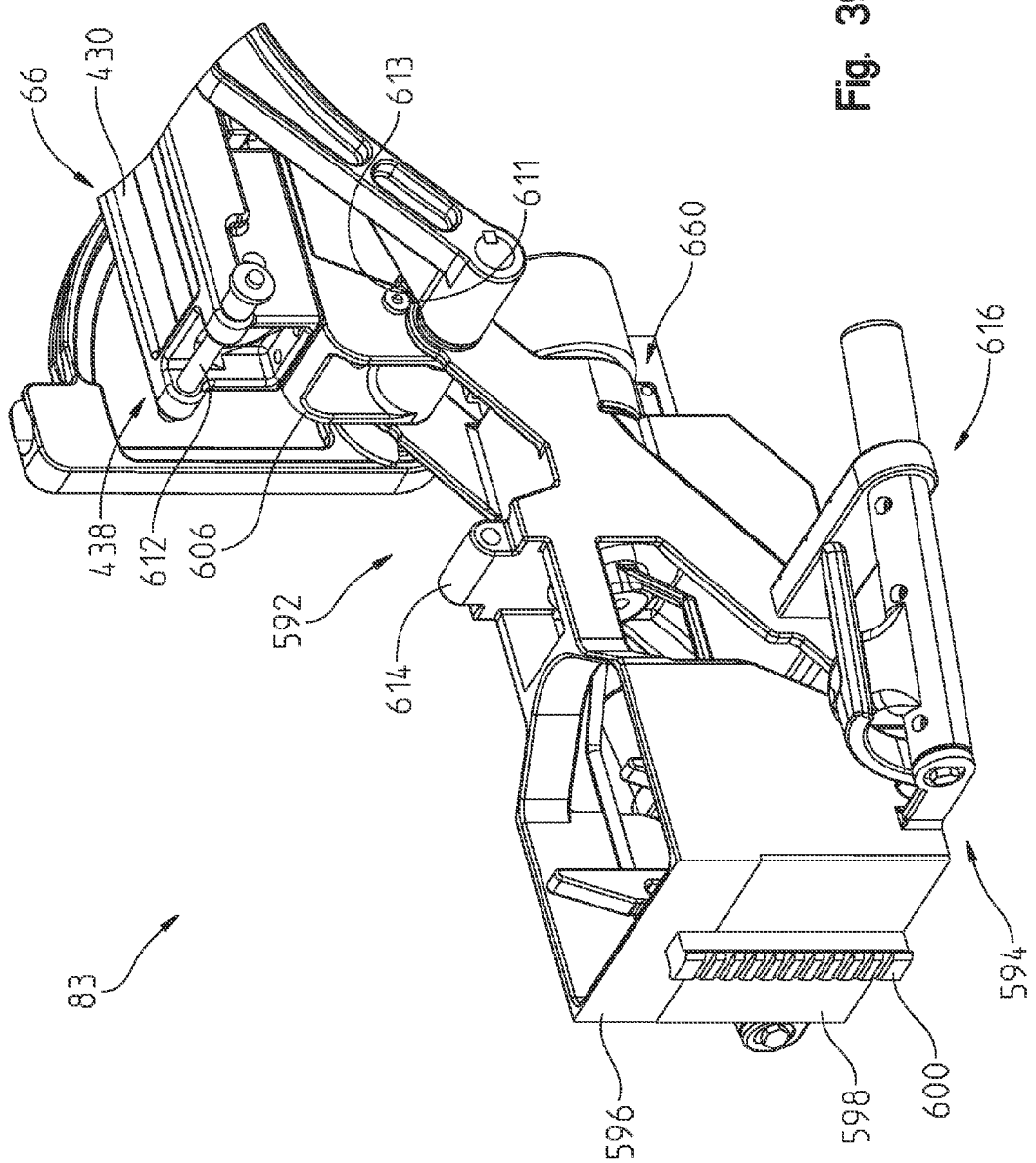

Fig. 39

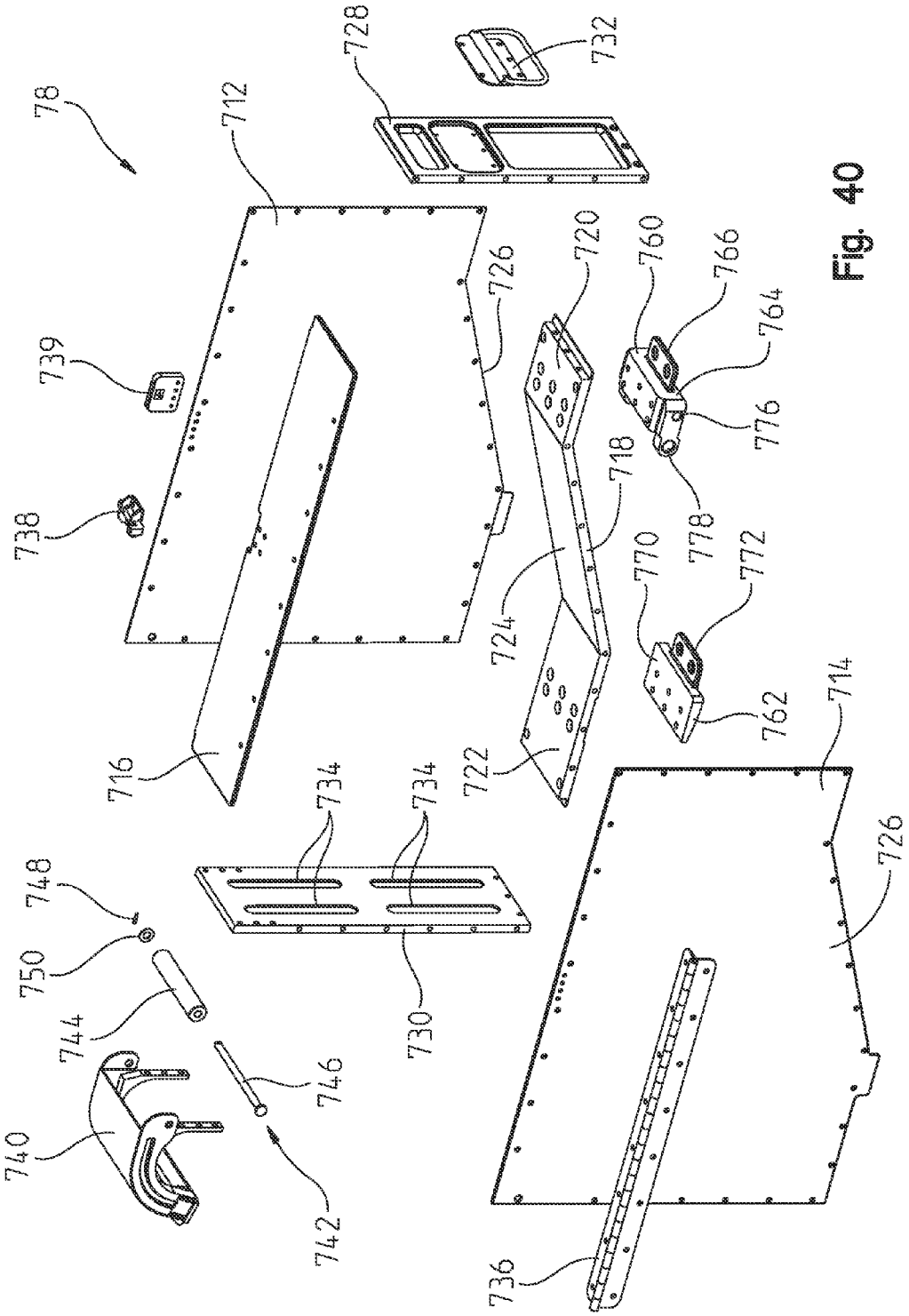
78
712
728
732
739
738
726
720
760
766
764
776
778
718
724
770
772
762
722
716
734
734
730
748
750
744
746
740
742
714
726
736

Fig. 40

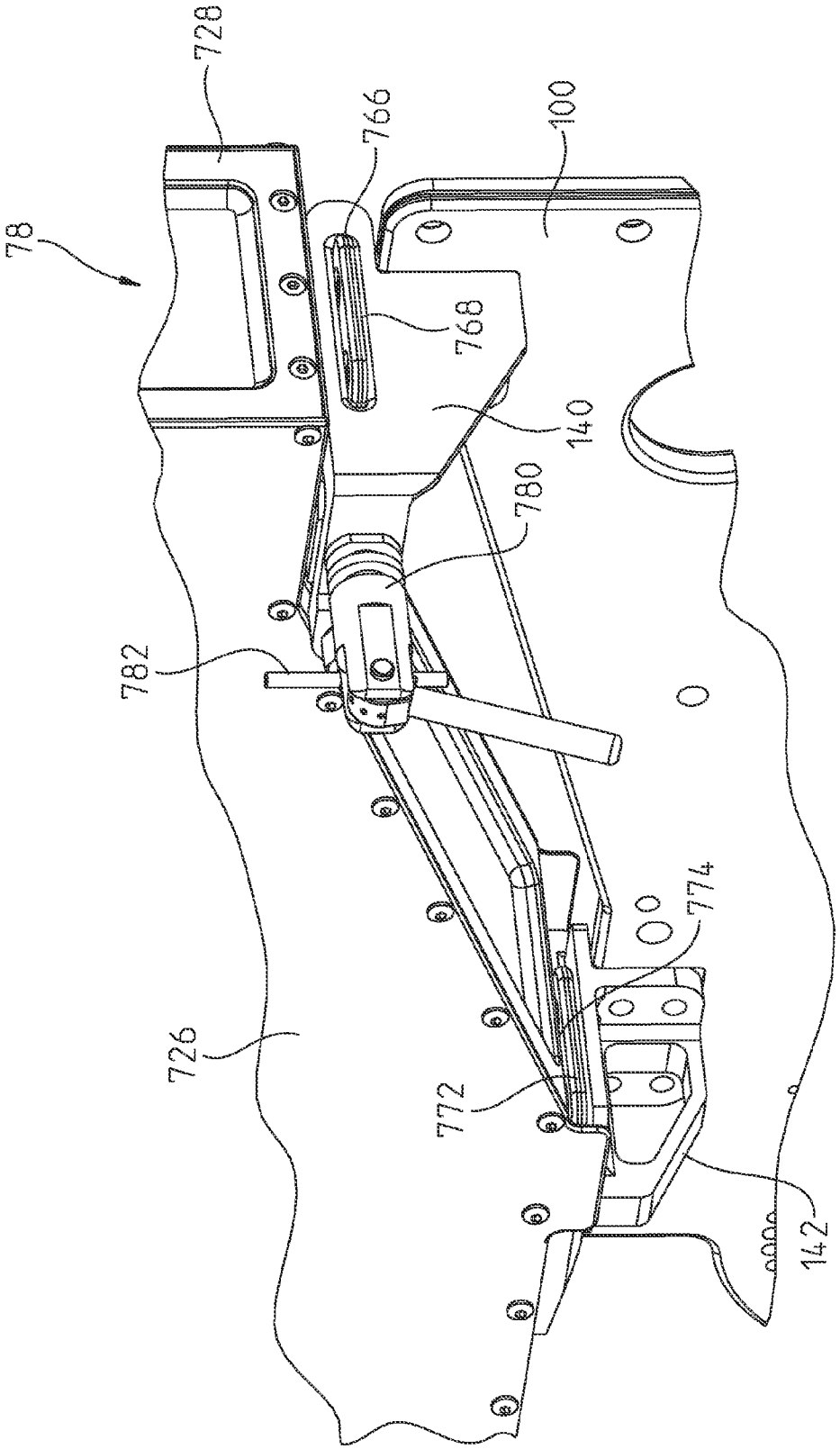

Fig. 41

HELICOPTER WEAPON MOUNTING SYSTEM

CROSS-REFERENCE TO RELATED APPLICATION

This application claims priority to U.S. Provisional Patent Application Ser. No. 61/657,735, filed Jun. 8, 2012, the disclosure of which is expressly incorporated by reference herein. This application is also related to U.S. patent application Ser. No. 13/559,973, filed Jul. 27, 2012, entitled "HELICOPTER WEAPON MOUNT SYSTEM", the disclosure of which is expressly incorporated by reference herein.

STATEMENT REGARDING FEDERALLY SPONSORED RESEARCH OR DEVELOPMENT

The invention described herein includes contributions by one or more employees of the Department of the Navy made in performance of official duties and may be manufactured, used and licensed by or for the United States Government for any governmental purpose without payment of royalties thereon.

BACKGROUND AND SUMMARY OF THE DISCLOSURE

The present disclosure relates to weapon systems and, more particularly, to machine gun helicopter armament systems.

It is known to provide various weapon systems on a variety of vehicles, including aircraft. With respect to helicopters, machine guns have been mounted within cabin areas, on window sills, and on external store supports. For example, it is known to mount M240 7.62 mm machine guns on adjustable linkages supported by gunner's windows on UH-60 Black Hawk military helicopters. It is also know to mount GAU-18 .50 caliber machine guns outside of gunner's windows on UH-60 Black Hawk military helicopters.

The present disclosure relates to a weapon mounting system that may be used to support a variety of machine guns external to the cabin area of a helicopter. For example, the weapon mounting system disclosed herein may support a GAU-21 .50 caliber machine gun outside of a gunner's window on an HH-60G Pave Hawk military helicopter. However, the weapon mounting system may also be used to support other machine guns, such as a GAU-2 minigun and a M240 7.62 mm machine gun, on a variety of support structures, including aircraft and land vehicles.

According to an illustrative embodiment of the present disclosure, a weapon mounting system includes a weapon cradle for releasably coupling to a machine gun, and a carriage operably coupled to the weapon cradle and defining an elevational axis. The cradle is configured to pivot about the elevational axis. A tubular pintle supports the carriage and defines a pintle passageway, the pintle operably coupled to the carriage and defining an azimuth axis extending perpendicular to the elevational axis. The carriage is configured to rotate about the azimuth axis. A tubular support post supports the pintle and defines a support post passageway.

An ejection collection device illustratively extends between the weapon cradle and the carriage, and includes a first side wall, and a second side wall spaced apart from the first side wall, the first and second side walls extending downwardly from the cradle for pivoting movement about the elevational axis with the weapon cradle. The illustrative ejection collection device further includes a first adjustable end wall positioned intermediate the first side wall and the second side wall, the first adjustable end wall having a first end coupled to the carriage and a second end configured to move with the cradle, and a second adjustable end wall positioned intermediate the first side wall and the second side wall and in spaced relation to the first adjustable end wall, the second adjustable end wall having a first end coupled to the carriage and a second end configured to move with the cradle. The ejection collection device is configured to direct spent shell casings and links from the machine gun to an opening defined at the bottom of the carriage and through an ejection path, the ejection path including the pintle passageway and the support post passageway.

According to another illustrative embodiment of the present disclosure, a weapon mounting system includes a weapon cradle for releasably coupling to a machine gun, a carriage supporting the weapon cradle for pivoting movement about an elevational pivot axis, and a pintle supporting the carriage for rotating movement about an azimuth axis extending perpendicular to the elevational axis. A trigger assembly is operably coupled to the weapon cradle, the trigger assembly including a handle grip, a lever arm supported for pivoting movement relative to the handle grip, an electrically operable actuator, and a paddle operably coupled to the lever arm and the electrically operable actuator. Pivoting movement of the lever arm causes the paddle to pivot into engagement with a trigger mechanism on the machine gun in a manual mode of operation, and activation of the actuator causes the paddle to pivot into engagement with a trigger mechanism on the machine gun in a remote electrical mode of operation. Illustratively, a switch controls power supplied to the electrically operable actuator, and a light is actuated when power is supplied to the actuator. The trigger assembly illustratively includes a frame coupled to the weapon cradle, and an upper housing supported by a frame. The upper housing is pivotable from a raised position to a lowered position to provide access to the weapon cradle. Illustratively, the weapon cradle includes a front end and a rear end, a guide member supported proximate the front end of the cradle and including a track to slidably receive a shoe of the machine gun, and a support shelf supported forward of the guide member and defining a resting surface for the shoe to assist in installing the machine gun on the weapon cradle.

BRIEF DESCRIPTION OF THE DRAWINGS

The foregoing aspects of many of the attendant advantages of this invention will become more readily appreciated as the same become better understood by reference to the following detailed description when taken in conjunction with the accompanying drawings.

FIG. **1** is a right side elevational view of a weapon mounting system of the present disclosure coupled to a helicopter, the helicopter shown in a standard landing gear configuration having conventional landing wheels;

FIG. **2** is an exploded perspective view showing an illustrative coupling of the weapon mounting system to the helicopter of FIG. **1**;

FIG. **3** is an exploded perspective view similar to FIG. **2**, showing an alternative coupling of the weapon mounting system to the helicopter of FIG. **1**;

FIG. **4** is a right side elevational view similar to FIG. **1**, showing a weapon mounting system coupled to a helicopter in an arctic landing gear configuration having landing skis;

FIG. **5** is a rear, right side perspective view of the weapon mounting system of FIG. **1**;

FIG. **6** is a rear, left side perspective view of the weapon mounting system of FIG. **5**;

FIG. **7** is a front, right side exploded perspective view of the weapon mounting system of FIG. **5**;

FIG. **8** is a rear, left side exploded perspective view of the weapon mounting system of FIG. **5**;

FIG. **9** is a front, right side exploded perspective view of the base assembly of the weapon mounting system of FIG. **5**;

FIG. **10** is a rear, right side exploded perspective view of the base assembly of FIG. **9**;

FIG. **11** is a perspective view of the base assembly of FIG. **9**, showing interchangeable tiedown loops for helicopters configured with standard landing wheels and with arctic skis;

FIG. **12** is an exploded perspective view of the support post and the pintle of the weapon mounting system of FIG. **5**;

FIG. **13** is the cross-sectional view, with a partial cutaway, of the weapon mounting system of FIG. **5**;

FIG. **14** is a detailed perspective view of an illustrative securing device of the weapon mounting system of FIG. **5**;

FIG. **15** is an exploded perspective view of the securing device of FIG. **14**;

FIG. **16** is a cross-sectional view of the illustrative securing device of FIG. **14**;

FIG. **17** is a perspective view of the upper portion of the weapon mounting system of FIG. **1** supporting a machine gun;

FIG. **18** is an exploded perspective view of the weapon mounting system of FIG. **17**, showing the carriage, the weapon cradle, the ejection collection device, the trigger assembly, and the machine gun;

FIG. **19** is a perspective view of the carriage of the weapon mounting system of FIG. **1**

FIG. **20** is an exploded perspective view of the carriage of FIG. **19**;

FIG. **21** is an exploded perspective view of the weapon cradle and the ejection collection device of FIG. **18**;

FIG. **22** is a side elevational view of the upper portion of the weapon mounting system of FIG. **17**, showing the weapon cradle locked in a substantially horizontal orientation;

FIG. **23** is a side elevational view similar to FIG. **22**, showing the weapon cradle pivoted downwardly at a locked depression position for use with the helicopter in the standard landing gear configuration of FIG. **1**;

FIG. **24** is a side elevational view similar to FIG. **23**, showing the weapon cradle pivoted downwardly at another locked depression position for use with the helicopter in the arctic landing gear configuration of FIG. **4**;

FIG. **25** is a perspective view of the weapon cradle in the position of FIG. **23**;

FIG. **26** is a perspective view in partial cross section, showing the carriage coupled to the pintle;

FIG. **27** is a perspective view, in partial cross section, of the carriage coupled to the pintle;

FIG. **28** is a cross sectional view showing the carriage in a first orientation relative to the pintle;

FIG. **29** is a cross-sectional view similar to FIG. **28**, showing the carriage rotated about an azimuth axis to a second angular orientation relative to the pintle;

FIG. **30** is a cross sectional view similar to FIG. **28**, showing the carriage rotated about an azimuth axis to a third angular orientation relative to the pintle;

FIG. **31** is a cross sectional view similar to FIG. **28**, showing the carriage rotated about an azimuth axis to a fourth angular orientation relative to the pintle;

FIG. **32** is a perspective view, with partial cutaway, of the ejection collection device of FIG. **18**;

FIG. **33** is a top perspective view of an alternative pintle assembly of the weapon mounting system of FIG. **5**;

FIG. **34** is a bottom perspective view of the pintle assembly of FIG. **33**;

FIG. **35** is a perspective view showing the machine gun for mounting to the weapon cradle of FIG. **18**;

FIG. **36** is a rear perspective view of the trigger assembly of FIG. **18**;

FIG. **37** is a front perspective view of the trigger assembly of FIG. **36**, with a partial cutaway thereof;

FIG. **38** is an exploded perspective view of the trigger assembly of FIG. **37**;

FIG. **39** is a perspective view of the trigger assembly of FIG. **37**, showing the rear housing pivoted to a lowered position for access to the weapon cradle;

FIG. **40** is an exploded perspective view of the ammunition canister of the weapon mounting system of FIG. **5**; and

FIG. **41** is a detailed perspective view showing securing of the ammunition canister to the mounting plate of FIG. **6**.

DETAILED DESCRIPTION OF THE DRAWINGS

For the purposes of promoting and understanding the principles of the invention, reference will now be made to the embodiments illustrated in the drawings, which are described below. The embodiments disclosed below are not intended to be exhaustive or limit the invention of the precise form disclosed in the following detailed description. Rather, the embodiments are chosen and described so that others skilled in the art may utilize their teachings. It will be understood that no limitation of the scope of the invention is thereby intended. The invention includes any alterations and further modifications in the illustrated devices and described methods and further applications of the principles of the invention will normally occur to one skilled in the art to which the invention relates.

Referring initially to FIGS. **1** and **2**, an illustrative machine gun helicopter weapon mounting system **10** of the present disclosure is shown supporting a weapon **12** on a helicopter **14**. In certain illustrative embodiments, the weapon mounting system **10** may be supported for manual operation by a gunner supported within the helicopter **14** (i.e., gunner manual mode of operation) or remote electrical operation by a pilot of the helicopter **14** (i.e., pilot remote electrical mode of operation).

The helicopter **14** illustratively includes a body or fuselage **15** including a right side **16** and a left side **18** extending generally parallel to a longitudinal axis **20**. The helicopter **14** also includes a front end **22** and a rear or aft end **24**. An occupant cabin **26** includes cockpit **28** and a gunner's area **30**. The gunner's area **30** may include a gunner's window **32** that may be opened to provide external access from the cabin **26** of the helicopter **14** and, more particularly, provide access for operation of the weapon **12**.

A rotor assembly **34** extends above the cabin **26** of the helicopter **14** and behind the gunner's window **32**. The rotor assembly **34** includes a plurality of rotor blades **36** driven in rotation by a shaft **38** operably coupled to a motor (not shown). The shaft **38** is illustratively inclined forwardly at a slight angle, such as 3 degrees from vertical. The illustrative helicopter **14** may include a refueling tube or probe **39** extending longitudinally forwardly along the right side **16** of the fuselage **15**.

With reference **1** and **4**, the helicopter **14** is shown in a rest position supported by a landing gear structure **40** including ground supports **42** coupled to the helicopter **14** through struts **44** and **46**. The helicopter in FIG. **1** is illustrated in a conventional landing gear configuration wherein the ground

supports **42** of the landing gear structure **40** comprise rotatable wheels **48** having tires **50** configured to be supported on conventional terrain **51**. The helicopter **14** illustrated in FIG. **4** has been placed in an arctic landing gear configuration, wherein the landing gear structure **40** includes landing skis **52** configured to be supported on snow or ice terrain **53**. As further detailed herein, the weapon mounting system **10** of the present disclosure may be efficiently and simply reconfigured for use with either conventional or arctic landing gear configurations.

The helicopter **14** shown in FIGS. **1-4** illustratively comprises a HH-60G Pave Hawk military helicopter. However, it should be appreciated that a wide variety of vehicles, including other types of aircraft such as UH-60 Black Hawk military helicopters, may utilize the weapon mounting system **10** of the present disclosure.

Reference now to FIGS. **5-8**, the weapon mounting system **10** illustratively includes an upper portion **60** and a lower portion **62**. The upper portion **60** includes weapon **12**, illustratively a machine gun **64**, supported by a weapon cradle **66**. The weapon cradle **66**, in turn, is supported by a carriage **68** for pivoting movement about a generally horizontal elevational axis **70** (i.e., elevational pivoting). An ejection collection device **72** cooperates with the carriage **68** to facilitate the collection and ejection of spent brass shell casings **74** and links **75** (FIG. **13**) from an ammunition belt **76** supplied to the machine gun **64** from an ammunition canister **78**. The carriage **68** is supported by a tubular pintle **80** for rotation about a generally vertical azimuth axis **82** (i.e., azimuth rotation). A trigger assembly **83** is coupled to the weapon cradle **66** and is configured to operate the machine gun **64**. The lower portion **62** of the weapon mounting system **10** illustratively includes a tubular support post **84** supporting the pintle **80**. A base assembly **86** secures the support post **84** to the helicopter **14**.

The machine gun **64** shown in FIG. **1** is illustratively a GAU-21 .50 caliber machine gun of the type manufactured by FNH USA of McLean, Va. However, it should be appreciated that a wide variety of weapons may be supported by the weapon mounting system **10**, for example a GAU-2 minigun **88** (FIG. **4**) and an M240 7.62 mm machine gun (not shown). The machine gun **64** of FIGS. **5** and **6** includes a body **90** including a receiver **92** coupled to the ammunition canister **78** through a feed chute **94** through which the ammunition belt **76** passes. The ammunition belt **76** may be of conventional design as including a plurality of rounds including a shell casing **74** receiving a bullet **77**, and a plurality of links **75** interconnecting adjacent shell casings **74**. The casings **74** and links **75** are typically made of metal, such as brass. The feed chute **94** is illustratively formed of interconnected stainless steel segments to provide flexibility and may be manufactured by Standard Armament of Glendale, Calif. A barrel **96** extends forwardly from the body **90** along a longitudinal weapon axis **97**.

Referring now to FIGS. **1-4**, **9** and **10**, the base assembly **86** illustratively includes a mounting member **98** secured to strong points on the body **15** of the helicopter **14**. As shown in FIGS. **2** and **3**, the mounting member **98** comprises a plate **100** formed of aluminum and secured to an external mounting structure of the helicopter body **15**. In one illustrative embodiment, the mounting member **98** may be secured to an external mounting structure or housing **102**, such as an extended pylon or stub wing, extending outwardly from the helicopter body **15** and coupled to the landing gear structure **40**. A plurality of bolts **104** pass through openings **106** in the mounting plate **100** and are threadably secured within apertures **108** formed in mounting blocks **110** positioned proximate opposing corners of the housing **102**. Washers **112** and spacers **114** may be positioned around each bolt **104** on opposite sides of the mounting plate **100**. In certain illustrative embodiments including refueling probe **39** as shown in FIG. **3**, mounting brackets **115** coupled to the probe **39** may replace a pair of the spacers **114**.

While shown secured to housing **102**, the base assembly **86** may be coupled to other strong points of the helicopter **14** proximate the gunner's window **32**. For example, the mounting plate **100** may be secured to the fuselage **15** adjacent the cabin floor and below the gunner's window **32**.

With reference to FIGS. **9** and **10**, the mounting plate **100** includes a first side surface **116** and a second side surface **118**. The first and second side surfaces **116** and **118** are illustratively substantial mirror images of each other such that the mounting plate **100** may be interchanged between the right side **16** and the left side **18** of the helicopter **14**. A removable tiedown accessory bracket **120** is illustratively received within a recess **122** formed in the second side **118** of the plate **100** and secured thereto through conventional fasteners, such as bolts **124** and nuts **126** (FIGS. **5** and **6**).

As shown in FIG. **11**, an alternative removable tiedown accessory bracket **130** may alternatively be secured within recess **122** of the plate **100**. Both removable tiedown accessory brackets **120** and **130** may alternatively be used as an attachment point for winching or securing (e.g., tiedown) the helicopter **14**. The removable tiedown accessory bracket **120** is configured for use with the conventional landing gear structure of FIG. **1**, while removable tiedown accessory bracket **130** is configured for use with the arctic landing gear configuration of FIG. **4**. Removable tiedown accessory brackets **120** and **130** include a base **132** secured to the mounting plate **100** and a connector loop **134** and **136**, respectively. The connector loop **136** of the removable tiedown accessory bracket **130** is smaller than the connector loop **134** of the removable tiedown accessory bracket **120** to provide additional clearance for the landing skis **52** of the arctic landing gear configuration of FIG. **4**. The removable tiedown accessory bracket **130** may also include a longitudinally extending arm **137** supporting a step **138** for use by an individual entering or leaving the cabin of the helicopter **14**. The extending arm **137** and step **138** are typically used only on the left side **18** of the helicopter **14** if the right side **16** of the helicopter **14** includes a refueling probe **39**.

As shown in FIGS. **9** and **10**, front mounting bracket **140** and a rear mounting bracket **142** are illustratively secured to the first side surface **116** of the mounting plate **100**. As further detailed herein, the mounting brackets **140** and **142** are configured to couple ammunition canister **78** to the mounting plate **100**. The mounting bracket **140** includes a base **146** received within a recess **148** formed in the first side surface **116** of the mounting plate **100** and secured thereto with conventional fasteners, such as bolts **147** and nuts **149** (FIGS. **5** and **6**). The mounting bracket **142** includes a base **150** received within a recess **152** formed in the first side surface **116** of the plate **100** and secured thereto with conventional fasteners, such as bolts **151** and nuts **153** (FIGS. **5**, **6**, and **11**). The mounting brackets **140** and **142** may be secured on the opposite second side of the plate **100** if secured to the left side **18** of the helicopter **14**.

A cable bracket **154** is secured to the second side surface **118** of the plate **100** and is configured to store an electrical cable (not shown). The bracket **154** illustratively includes a base **156** supporting a substantially horizontal first tab **158** and a substantially vertical second tab **160**. Electrical connectors or sockets **162** and **164** may be supported by the first and second tabs **158** and **160** of the bracket **154** to secure opposing ends of the stored electrical cable. The connectors **162** and

164 are oriented to prevent the accumulation of dirt or debris therein. A cable clamp or holder **166** (FIG. **8**) is configured to secure electrical grounding straps (not shown) coupled to the helicopter **14**.

A support **170** is illustratively coupled to the mounting plate **100** and includes a bracket **172** coupled to a base or receiver tube **174**. The receiver tube **174** has an upper opening **176** and a lower exit opening **178** with a passageway **180** (FIG. **13**) extending therebetween. In certain illustrative embodiments, the receiver tube **174** may be formed of multiple components to facilitate manufacturing thereof. For example, the receiver tube **174** may include an upper tube **182** secured to a lower tube **184** by bolts **186** and nuts **188** (FIG. **11**) securing together cooperating tabs **190** and flange **192**, respectively. The bracket **172** illustratively includes a base **194** secured to the first side surface **116** of the plate **100** through conventional fasteners, such as bolts **196** and nuts **198**. The base **194** supports a tubular connector **200** coupling the base **194** to the upper tube **182** and including a forward opening **202**.

With reference to FIG. **9**, a traditional harmonic balancer **206** from the helicopter **14** is illustratively received within the bracket **172**. More particularly, the harmonic balancer **206** includes a bracket **208** received within the tubular connector **200** and having an arm **210** extending through opening **202** in the connector **200**. The rear end of the plate **100** may also include a plurality of circumferentially spaced mounting apertures **212** that may receive fasteners to secure a flare dispenser (not shown) to the base assembly **86**.

Referring now to FIGS. **7**, **8**, **12**, and **13**, the support post **84** includes a cylindrical side wall **214** defining a passageway **216**. The support post **84** extends longitudinally along a rearwardly inclined axis **220** between a lower end **222** and an upper end **224** (FIG. **12**). The lower end **222** illustrative includes an adapter **226** having a chamfered leading edge **228** to assist in guiding insertion into the receiver tube **174**. The upper end **224** includes an adapter **230** having a lower portion **232** aligned with inclined axis **220** and an upper portion **234** aligned with azimuth axis **82**. The lower portion **232** of adapter **230** is secured to the support post **84** by conventional fasteners, such as bolts **231**, washers **233**, and nuts **235**. The upper portion **234** of adapter **230** includes a mounting flange **236**.

A base coupler **240** secures the support post **84** to the receiver tube **174**. More particularly, the base coupler **240** includes a lower flange **242** supported by the receiver tube **174** and an upper flange **244** supported by the support post **84**. The lower flange **242** extends radially outwardly from the receiver tube **174** and may be integrally formed therewith. The upper flange **244** is illustratively supported by a collar **246** secured to the support post **84** by conventional fasteners, such as bolts **248**, washers **249**, and nuts **250** (FIG. **12**). The collar **246** is secured intermediate the lower and upper ends **222** and **224** of the support post **84** such that a lower portion **251** of the support post **84** is concentrically received within the receiver tube **174** when coupled thereto. Locating pins **252** may extend upwardly from the lower flange **242** for receipt within openings **254** of the upper flange **244** to facilitate proper orientation of the support post **84** relative to the receiver tube **174**. A primary lock includes a plurality of securing devices **260** that couple the upper flange **244** to the lower flange **242**. While coaxial insertion of lower portion **251** within receiver tube **174** assists during assembly, in other embodiments different conventional couplers (e.g., flanged mounts without coaxial insertion) may be utilized. In yet other embodiments, the support post **84** may be integrally formed with receiver tube **174**.

With reference to FIGS. **14-16**, the securing devices **260** each illustratively include an upper housing **262** supported for rotation relative to a lower housing **264**. The lower housing **264** includes a lower end supporting a plurality of external threads **266** that are configured to engage a plurality of internal threads **268** in the upper flange **244**. A flange **270** is supported above the external threads **266** and defines a stop for engaging the upper surface **272** of the flange **244**. The lower end of the upper housing **262** is pined to an upper end of the lower housing **264**. A handle **274** is pivotably supported by the upper end of the upper housing **262**. More particularly, the upper end of the upper housing **262** includes a pair of spaced apart arms **276** supporting a pin or bolt **278** about which the handle **274** pivots. A spring **280** biases the upper housing **262** from the lower housing **264** and receives a securing rod **282**. The upper end of the securing rod **282** is secured to the upper housing **262**, illustratively through pins **283**, to rotate therewith. The lower end of the securing rod **282** includes a plurality of external threads **284** configured to engage internal threads **286** in the mounting apertures **288** of the flange **242**. A lock washer **289** is positioned intermediate the lower end of the upper housing **262** and the flange **270** of the lower housing **264**.

A detent mechanism **290** is supported by the upper end of the securing rod **282** and cooperates with the handle **274**. The detent mechanism **290** includes a pin **292** biased by a spring **294** into engagement within depressions or recesses **296** spaced in arcuate base surface **298** of the handle **274**. The detent mechanism **290** maintains the handle **274** in a desired angular position relative to the upper housing **262**, thereby preventing undesired pivoting movement in response to movement (e.g., vibration, air flow, etc.) of the helicopter **14**.

With reference to FIGS. **9-11**, the base coupler **240** also includes a secondary lock **300** illustratively supported within an opening **301** formed within the receiver tube **174** of the base assembly **86**. The secondary lock **300** illustratively includes a spring biased pin **302** operably coupled to a handle **304** that may be releasably received within an opening **306** of the support post **84** (FIG. **12**). Pulling the handle **304** causes the pin **302** to move against the spring bias and disengage from the opening **306**. The chamfered leading edge **228** of the support post **84** assists in assembly within receiver tube **174** by pushing the pin **302** outwardly against the spring bias during insertion of the support post **84** until the pin **302** engages within opening **306**.

As shown in FIGS. **12** and **13**, pintle **80** is supported by the upper end of the support post **84**. The pintle **80** is illustratively formed of stainless steel and includes a cylindrical side wall **312** and a lower mounting flange **314** coupled to the upper mounting flange **236** of the support post **84**. The side wall **312** defines a passageway **316** in communication with the passageway **216** of the support post **84**. Locating pins **318** of the upper mounting flange **236** of the support post **84** are received within cooperating openings **320** in the lower mounting flange **314** to rotationally orient the pintle **80** relative to the support post **84**. A plurality of fasteners, such as bolts **322** and nuts **324** pass through openings **326** and **328** of the mounting flanges **236** and **314**, respectively, to secure the upper mounting flange **236** to the lower mounting flange **314**.

An arcuate azimuth stop member **330** includes clockwise and counterclockwise stop surfaces **332** and **334**. The stop member **330** is positioned radially outwardly from the side wall **312** of the pintle **80** and is supported above the mounting flange **314**. A plurality of conventional fasteners, such as bolts **336** and nuts **338**, may secure the stop member **330** to the pintle **80**. The opposing stop surfaces **332** and **334** are configured to limit rotation of the carriage **68** about the azimuth

axis **82**. More particularly, the stop surfaces **332** and **334** of the stop member **330** cooperate with opposing surfaces **342** and **344** of a cooperating projection **340** supported for rotation with the carriage **68** (FIG. **19**). As may be appreciated, the stop member **330** may be easily removed and replaced with a different stop member, for example, if worn or damaged. The stop member **330** may also be replaced with another stop member with different spacing between stop surfaces **332** and **334** if different rotational travel limits about the azimuth axis **82** are desired to provide different fields of fire.

With reference to FIGS. **17** and **18**, the upper portion **60** of the weapon mounting system **10** includes the carriage **68**, the weapon cradle **66**, the ejection collection device **72**, and the trigger assembly **83**. The carriage **68** rotates relative to the pintle **80** about azimuth axis **82**, while the weapon cradle **66** rotates relative to the carriage **68** about elevational axis **70**. The ejection collection device **72** is supported by the weapon cradle **66** to collect and eject spent shell casings **74** and links **75** from the machine gun **64**. The trigger assembly **83** is supported by the weapon cradle **66** and is configured to actuate the machine gun **64** in both the gunner manual mode of operation and the pilot remote electrical mode of operation.

With reference now to FIGS. **13**, **19**, **20**, and **27**, the carriage **68** illustratively includes a base **350** rotatably receiving the pintle **80**. Rotation between the carriage **68** and the pintle **80** permits the machine gun **64** to rotate relative to the pintle **80** about generally vertical azimuth axis **82**. The base **350** illustratively includes an outer cylindrical side wall **352** concentrically receiving the cylindrical side wall **312** of the pintle **80**. Elongated openings **353** and **355** are formed within the side wall **352**. An inner cylindrical sleeve **360** is concentrically received intermediate the side wall **352** of the base **350** and the side wall **312** of the pintle **80**. Elongated openings **361** and **363** are formed within the sleeve **360** and are aligned with corresponding elongated openings **353** and **355** of the base **350**.

Referring now to FIGS. **13**, **20**, and **27**, a coupling pin **364** extends between the cylindrical side wall **312** of the pintle **80** and the cylindrical side wall **352** of the base **350**. More particularly, the pin **364** is received intermediate a radially outwardly facing annular groove **366** formed in the pintle **80** and an opposing radially inwardly facing groove **368** formed in the base **350**. An elongated clearance opening **370** is formed in the sleeve **360** and receives the pin **364**, thereby securing the sleeve **360** to the base **350**. The pin **364** defines a chord **372** extending within the opening **370** defined by the sleeve **360** and received within the annular groove **366** of the pintle **80** and groove **368** of the base **350**, thereby axially securing the carriage **68** to the pintle **80** while permitting rotational movement therebetween. Illustratively, a first end of the pin **364** includes a handle **374** and the second end includes a ball detent **375** (FIG. **20**) for retaining the pin **364** in position.

As shown in FIGS. **18-20**, first and second arms **376** and **378** extend upwardly from the base **350** of the carriage **68** and receive the weapon cradle **66** therebetween. As further detailed herein, pivot couplings **380** and **382** operably couple the weapon cradle **66** to the arms **376** and **378** for pivoting movement about elevational axis **70**. Locking pins **390** and **392** are also provided to secure the weapon cradle **66** in a desired elevational position about elevational axis **70**.

The base **350** of the carriage **68** supports first and second locking pins **394** and **396** configured to secure the carriage **68** in a desired angular position about azimuth axis **82**. The first locking pin **394** is angularly offset counterclockwise (illustratively by 75 degrees) from the second locking pin **396** for ergonomic considerations. More particularly, the gunner may utilize the most convenient locking pin **394**, **396** (e.g., inboard toward the gunner's window **32**) to secure the carriage **68** in position.

As shown in FIG. **27**, the locking pins **394** and **396** each illustratively include a shaft **398** biased by a spring **399**, operably coupled to a handle **400**, and slidably received within a housing **402**. When the handle **400** is rotated to a position parallel to the shaft **398**, the shaft **398** is retracted (i.e., pulled outwardly) against the bias of the spring **399**. When the handle **400** is rotated to a position substantially perpendicular to the shaft **398**, the shaft **398** is extended (i.e., pushed inwardly) as a result of the bias of the spring **399**. In the extended position, the shaft **398** of one of the locking pins **394**, **396** may be inserted into an opening **404**, **406** formed in the side wall **312** of the pintle **80** (FIG. **13**), thereby rotationally locking the carriage **68** to the pintle **80**.

With reference to FIGS. **19** and **20**, a bore sight adjustment device **410** is supported by the base **350** of the carriage **68** and cooperates with the locking pins **394** and **396** and the stop projection **340**. The bore sight adjustment device **410** may be used to align the azimuth limit stops defined by engagement between the stop member **330** and the projection **340**, and azimuth locked positions of the carriage **68** defined by receipt of locking pins **394** and **396** within openings **404** and **406** of the pintle **80**. More particularly, the bore sight adjustment device **410** is configured to angularly adjust the stop projection **340** and the locking pins **394** and **396** relative to the side wall **352** of the carriage **68**. The bore sight adjustment device **410** includes an annular band **412** including a first arcuate portion **414** coupled to a second arcuate portion **416**. A first end of the first arcuate portion **414** is secured to a first end of the second arcuate portion **416** through conventional fasteners, such as bolts **418** and nuts **420**. Similarly, a second end of the first arcuate portion **414** is secured to a second end of the second arcuate portion **416** through conventional fasteners, such as bolts **418** and nuts **420**.

With reference to FIGS. **12**, **19**, and **20**, the stop projection **340** is supported by the first arcuate portion **414** of the band **412** and includes radially outwardly projecting first and second stop surfaces **342** and **344**. The first stop surface **342** is configured to engage with the first stop surface **332** of the azimuth stop member **330** to define a first azimuth limit stop (e.g., clockwise rotation stop) of the carriage **68**, while the second stop surface **344** is configured to engage with the second stop surface **334** of the azimuth stop member **330** to define a second azimuth limit stop (e.g., counterclockwise rotation stop) of the carriage **68**. Illustratively, the rotational travel limit of the carriage **68** between stop surfaces **332** and **334** is approximately 175 degrees. As detailed above, the rotational travel limit may be simply modified by replacing the azimuth stop member **330** with a different stop member having differently positioned limit stop surfaces **332** and **334**.

The first and second locking pins **394** and **396** are supported within mounting members **422** and **424** supported by the first arcuate portion **414** of the band **412** of the bore sight alignment device **410**. The mounting members **422** and **424** including openings **426** and **428**, respectively. In one illustrative embodiment, the housing **402** of each locking pin **394**, **396** may be threadably received within the respective openings **426**, **428**.

Opposing adjustment screws **421**, **423** and nuts **425**, **427** are configured to adjust the position of the stop projection **340** and the locking pins **394** and **396**. More particularly, rotating screw **421** clockwise and screw **423** counterclockwise will rotate the band **412** in a first direction relative to base **350** of the carriage **68**, while rotation the screw **421** counterclockwise and screw **423** clockwise will rotate the band **412** in a

second direction relative to base **350** of the carriage **68**. As may be appreciated, the stop projection **340** and the locking pins **394** and **396** move concurrently with the band **412**.

FIGS. **28-31** illustrate different angular positions of the carriage **68** about the azimuth axis **82** relative to the pintle **80**. The longitudinal weapon axis **97** of the machine gun **64** is shown relative to the pintle **80**, wherein the firing or forward direction of the barrel **96** of the machine gun **64** is represented by arrow **429**.

FIG. **28** shows the carriage **68** in a first angular position wherein the machine gun **64** is in a fixed forward position. In this position, the first locking pin **394** is received within first opening **404** of the pintle **80**, the longitudinal weapon axis **97** of the machine gun **64** is substantially parallel to the longitudinal axis **20** of the helicopter **14**, and the barrel **96** is directed to the front end **22** of the helicopter **14**. In certain illustrative embodiments, the axis **97** may be slightly angled outwardly (e.g., 2 to 3 degrees) from the helicopter axis **20**. As detailed above, the bore sight adjustment device **410** may be utilized to set this position (and the positions of FIGS. **29-31**). More particularly, manipulation of the adjustment screws **421** and **423** will adjust the relative angular position of the locking pins **394**, **396** relative to the carriage **68**, and thus the weapon cradle **66** and machine gun **64**.

FIG. **29** shows the carriage **68** in a second angular position about the azimuth axis **82** relative to the pintle **80**, where the machine gun **64** is rotated by an angle α (illustratively approximately 75 degrees) clockwise from the fixed forward position of FIG. **28**. In this position, the second locking pin **396** is received within the first opening **404** of the pintle **80**, and the machine gun barrel **96** extends outwardly from the helicopter **14** by approximately 75 degrees from the longitudinal axis **20** of the helicopter **14**.

FIG. **30** shows the carriage **68** in a third angular position about the azimuth axis **82** relative to the pintle **80**, where the machine gun **64** is rotated by an angle β (illustratively approximately 15 degrees) clockwise from the second angular position of FIG. **29**. In this position, the first locking pin **394** is received within the second opening **406** of the pintle **80**, and the machine gun barrel **96** extends outwardly from the helicopter **14** by approximately 90 degrees from the longitudinal axis **20** of the helicopter **14**.

FIG. **31** shows the carriage **68** in a fourth angular position about the azimuth axis **82** relative to the pintle **80**, where the machine gun **64** is rotated by an angle γ (illustratively approximately 75 degrees) clockwise from the third angular position of FIG. **30**. In this position, the second locking pin **396** is received within the second opening **406** of the pintle **80**, the axis **97** of the machine gun **64** is substantially parallel (illustratively about 15 degrees outwardly) to the longitudinal axis **20** of the helicopter **14**, and the barrel **96** is directed to the rear end **24** of the helicopter **14**.

With further reference to FIGS. **20-25**, the illustrative weapon cradle **66** removably supports the machine gun **64** for movement therewith. The weapon cradle **66** is secured to the arms **376** and **378** of the carriage **68** for pivoting movement about elevational axis **70**. As noted herein, the illustrative weapon cradle **66** is configured to support a GAU-21 .50 caliber machine gun. However, other cradle assemblies may be substituted therefor to support other weapons.

With reference to FIG. **21**, the weapon cradle **66** includes a body **430** having laterally spaced first and second rail members **432** and **434** extending longitudinally between front and rear ends **436** and **438**. A first connecting wing **442** extends upwardly from the first rail member **432** and is connected to the body **430** by conventional fasteners, such as bolts **441** and nuts **443**. Similarly, a second connecting wing **444** extends upwardly from the second rail member **434** and is connected to the body **430** by conventional fasteners, such as bolts **445** and nuts **447**.

As shown in FIGS. **20** and **21**, pivot couplings **380** and **382** include pins **450** and **452** received within bushings **454** and **456** to pivotally couple the weapon cradle **66** to the arms **376** and **378** of the carriage **68**. Pivot couplings **380** and **382** support connecting wings **442** and **444** on arms **376** and **378**, respectively, for pivoting movement about elevational axis **70**. Each pivot pin **450** and **452** illustratively includes an internally threaded shaft **458** received within an outer sleeve **460** supporting a pivot plate **462** having opposing engagement surfaces **461** and **463**. A screw **464** and a washer **466** illustratively couple the sleeve **460** and plate **462** to the shaft **458**.

An elevational stop member **470** is secured to each of the arms **376** and **378** of the carriage **68**, illustratively through conventional fasteners, such as bolts **379**. The stop members **470** each include opposing stop surfaces **472** and **474** for engaging with opposing engagement surfaces **461** and **463** of pivot plate **462**. The pivot pins **450** and **452** rotate with the weapon cradle **66**, such that engagement between engagement surface **461** and stop surface **472** defines a first elevational limit stop (e.g., depression stop) of the weapon cradle **66**, and engagement between engagement surface **463** and stop surface **474** defines a second elevational limit stop (e.g., elevation stop) of the weapon cradle **68**. The stop members **470** may be easily replaced with other stop members having differently positioned stop surfaces **472** and **474** for altering the first and second elevational limit positions of the weapon cradle **66**.

As noted above, locking pins **390** and **392** are coupled to arms **376** and **378** of the carriage **68** illustratively through nuts **473** and are configured to secure the weapon cradle **66** in a desired elevational position. More particularly, locking pins **390** and **392** may be of conventional design as including a spring loaded shaft **475** that is moved within a housing **476** in response to rotation of a knob **477**. More particularly, rotation of the knob **477** in a first direction will cause the shaft **475** to extend outwardly from the housing **476**, while rotation of the knob **477** in a second direction will cause the shaft **475** to retract inwardly toward the housing **476**. In the extended position, the shaft **475** is configured to be received within one of a plurality of recesses **478***a*, **478***b*, and **478***c* formed in each of the connecting wings **442** and **444** of the weapon cradle **66**.

With reference to FIGS. **21** and **35**, a coupler **480** couples the machine gun **64** to weapon cradle **66** and includes a mounting block **482** coupled to a front end of a shock absorber **484**. The mounting block **482** receives a pin **486** to couple a mounting tab **488** of the machine gun **64** thereto. The pin **486** illustratively includes a shaft **489** including a handle **490** at a first end and a ball detent **492** at the second end. A button **494** provided on the handle **490** retracts the ball detent **492**.

A rear end of the shock absorber **484** is secured intermediate the rail members **432** and **434** at the rear end **438** of the body **430**, illustratively by conventional fasteners, such as a pin or bolt. A bottom bracket **496** is secured intermediate the rail members **432** and **434** below the body **430** by bolts **498** and supports the shock absorber **484**. The shock absorber **484** is configured to resist recoil of the machine gun **64** in the direction of the longitudinal axis **97**.

Referring further to FIG. **35**, first and second guide members **500** and **502** are positioned proximate the front end **436** of the body **430** and include tracks **504** and **506** configured to slidably receive shoes or blocks **508** and **510**, respectively, supported on opposite sides of the machine gun **64**. First and

second support shelves **512** and **514** are supported forward of the guide members **500** and **502** at the front end of the body **430**. The shelves **512** and **514** provide resting surfaces **516** and **518** for the shoes **508** and **510** to assist in installing the machine gun **64** on the weapon cradle **66**.

FIGS. **22-24** illustrate different angular positions of the weapon cradle **66** about the elevational axis **70** relative to the carriage **68**. FIG. **22** shows the weapon cradle **66** in a substantially horizontal position where the longitudinal axis **97** of the machine gun **64** is substantially parallel to the helicopter axis **20**. In this position, each locking pin **390** and **392** is received within the respective first recesses **478***a* of connecting wings **442** and **444** of the weapon cradle **66**. Engagement between engagement surface **461** of pivot plate **462** and stop surface **472** of stop member **470** limit travel significantly counterclockwise (i.e., elevated barrel **96** as represented by firing direction arrow **429**) beyond the position of FIG. **22**.

FIG. **23** shows the weapon cradle **66** pivoted downwardly from horizontal (clockwise from FIG. **22** to FIG. **23**) by angle δ (illustratively, approximately 55 degrees). In this first depression position, each locking pin **390** and **392** is received within respective second recesses **478***b* of connecting wings **442** and **444** of the weapon cradle **66**. Engagement between engagement surface **463** of pivot plate **462** and stop surface **474** limit travel significantly clockwise (i.e., depressed barrel **96** as represented by firing direction arrow **429**) beyond the position of FIG. **23**. The depression position of FIG. **23** is configured for use with the standard landing gear configuration of the helicopter **14** shown in FIG. **1**.

FIG. **24** shows the weapon cradle **66** pivoted downwardly from horizontal (clockwise from FIG. **22** to FIG. **24**) by angle ϵ (illustratively, approximately 35 degrees). In this second depression position, each locking pin **390** and **392** is received within respective third openings **478***c* of connecting wings **442** and **444** of the weapon cradle **66**. The depression position of FIG. **24** is configured for use with the arctic landing gear configuration of the helicopter **14** shown in FIG. **4** in order to prevent potential interference with bullets **77** fired from the machine gun **64**. Again, engagement between engagement surface **463** of pivot plate **462** and stop surface **474** limit travel significantly clockwise (i.e., depressed barrel **96** as represented by firing direction arrow **429**) beyond the position of FIG. **24**. As noted above, the stop member **470** may be replaced with other stop members to alter the first and second elevational limit stop positions of the weapon cradle **66**.

With reference to FIGS. **13**, **21**, and **25**, the ejection collection device **72** is operably coupled to the weapon cradle **66** for receiving, collecting, and directing ejected shell casings **74** and links **75** from the machine gun **64** though a passageway **520** (including an opening **521** in carriage **68**, passageway **316** of the pintle **80**, and passageway **216** of the support post **84**) to exit opening **178** in the base assembly **86** (FIG. **13**). The ejection collection device **72** includes a hopper **524** configured to funnel the spent shell casings **74** and links **75** through opening **521** of carriage **68** to the passageway **316** of the pintle **80**.

With reference to FIGS. **21**, **25**, and **32**, the hopper **524** illustratively includes a lower opening **525** aligned with opening **521** of the carriage **68** and defined by spaced apart side walls **526** and **528** coupled together by front and rear end walls **530** and **532**. The hopper **524** is positioned between arms **376** and **378** of the carriage **68** and may be coupled to a platform **531** base **350** via conventional fasteners **533** (FIG. **25**). First and second side deflectors, illustratively side plates **534** and **536**, are coupled to the first and second side rail members **432** and **434** of the weapon cradle **66** and are configured to deflect the spent shell casings **74** and links **75** to the lower opening **525** of the hopper **524**. The side plates **534** and **536** each include an upper edge **538** coupled to the body **430** of the weapon cradle **66**, and an arcuate lower edge **540** received inwardly from the side walls **526** and **528** of the hopper **524**. As such, the side plates **534** and **536** are free to move with weapon cradle **66**. The second side plate **536** illustratively includes an opening **542** coupled to a link chute **544** coupled to the machine gun **64** (FIG. **18**). The link chute **544** is illustratively formed of interconnected stainless steel segments to provide flexibility and may be manufactured by Standard Armament of Glendale, Calif.

Front and rear deflectors, illustratively adjustable front and rear end walls **546** and **548**, extend between the hopper **524** and the weapon cradle **66**. As with the side plates **534** and **536**, the end walls **546** and **548** are configured to deflect spent shell casings **74** and links **75** to the opening **525** of the hopper **524**. The adjustable front end wall **546** illustratively includes a flexible belt **550** including a first end supported by a roller **552** rotatably coupled to the hopper **524**, and a second end supported by a bracket **554** coupled to side plates **534** and **536** of the weapon cradle **66** and configured to move therewith. Similarly, the adjustable rear end wall **548** includes a flexible belt **556** including a first end supported by a roller **558** rotatably coupled to the hopper **524**, and a second end supported by a bracket **560** coupled to side plates **534** and **536** of the weapon cradle **66** and configured to move therewith. Flexible belts **550** and **556** may be formed of a fabric material, illustratively of nylon webbing.

With reference to FIGS. **21** and **32**, the bracket **554** is pivotably supported between side plates **534** and **536** through an internally threaded pins **562** secured by external bolts **563** and washers **564**. Similarly, bracket **560** is supported between side plates **534** and **536** through internally threaded pin **565** secured by an external bolt **566** and washer **567**. Each roller **552** and **558** is rotatably supported between side plates **534** and **536** and is spring loaded (i.e., include internal torsion springs **551** shown in FIG. **32**), such that the flexible belts **550** and **556** are maintained in tension and the first ends are configured to be wound on respective rollers **552** and **558**. Each roller **552**, **558** is rotatably supported on a threaded pin or shaft **553**, **555** secured to the hopper **524** by nuts **557**, **559**. A guide **568** includes a pin **569** rotatably supporting a roller **570** and secured thereto by an external bolt **571** and a washer **572**.

With further reference to FIGS. **13**, and **22-25**, the side plates **534**, **536**, and end walls **546**, **548** adapt to pivoting movement of the weapon cradle **66**. As noted above, when the weapon cradle **66** is moved from the horizontal position of FIG. **22** to the depression positions of FIGS. **23** and **24**, the side plates **534**, **536** rotate with the cradle **66**, the belt **556** of the rear end wall **548** extends, and the belt **550** of the front end wall **546** retracts, thereby adapting to continue deflecting spent shell casings **74** and links **75** to the opening **525** of the hopper **524**. As the rear belt **556** extends (as shown in FIGS. **23** and **24**), the guide **568** maintains the belt **556** spaced from the link opening **542** to keep it clear for the passage of links **75** downwardly toward the opening **525** of the hopper **524**.

The ejection collection device **72** further includes an ejection chute assembly **574** to facilitate ejection of spent shell casings **74** and links **75** associated with weapons operating at high rates of speed (for example, the GAU-21 machine gun **64**). The hopper **524** directs the spent shell casings **74** and links **75** downwardly through the passageway **316** of the pintle **80**, through the passageway **216** of the support post **84**, and away from the helicopter **14** through the exit opening **178** positioned below the mounting plate **100** of the helicopter **14** (FIG. **1**). By funneling the spent shell casings **74** and links **75**

through the center of the pintle **80**, the support post **84**, and the base tube **174**, there is no need for a separate ejection hose as used in prior art systems thereby providing a more compact system **10** and reducing aerodynamic drag on the helicopter **14**.

As shown in FIGS. **33** and **34**, an alternative carriage **580** is shown for supporting a conventional weapon cradle for an M240 machine gun (not shown) or a minigun **88** (FIG. **4**). Such conventional cradle assemblies are available from Dillon Aero, Inc. of Scottsdale, Ariz. Illustratively, the carriage **580** includes a base **582** concentrically receiving the pintle **80** and an upper extension **584** supporting a post **586**. A bore sight adjustment device **588** similar to bore sight adjustment device **410** may be supported by the base **582**. As such, similar components of bore sight adjustment device **588** and bore sight adjustment device **410** are identified with like reference numbers. The post **586** illustratively supports for rotation the weapon cradle for the respective alternative weapon.

Referring now to FIGS. **36-38**, the trigger assembly **83** is shown as including a frame **592** supporting a spade grip assembly **594**. The frame **592** supports an upper housing **596** including a removable cover **598**. A mounting rail **600** is supported above the cover **598** and is configured to removably couple a variety of weapon supplemental devices and accessories, such as electronic devices, scopes, sights, lights, lasers, adapters, and any other desired gear. The rail **600** may be of any suitable shape and size, but illustratively is a Picatinny rail. More particularly, the rail **600** illustratively includes a plurality of longitudinally spaced-apart ribs **602** separated by transverse slots **604** (FIG. **36**), such as the Picatinny rail specified in MIL-STD-1913.

With reference to FIGS. **38** and **39**, a bracket **606** pivotably couples the frame **592** to the body **430** of the weapon cradle **66**. The bracket **606** is secured to the weapon cradle **66** via conventional fasteners proximate the rear end of the body **430**. A pivot rod **608** extends within bushings **610** received within the bracket **606**. As shown in FIG. **39**, trigger frame **592** may rotate about bushings **610** from a raised position to a lowered position for providing access to weapon cradle **66** for installation and removal of the machine gun **64**. More particularly, by lowering the upper housing **596** access is provided to the rear end **438** of the weapon cradle **66**. A pin **612** is illustratively received within a boss **614** to secure the frame **592** in the raised position. Stops **611** are secured to the bracket **606** and engage with an edge **613** on the frame **592** to define the lowered position of the housing **596**.

Illustratively, the spade grip assembly **594** includes spaced apart right and left trigger handles **616** and **618** operably coupled to right and left pivotable paddles or flippers **620** and **622** for activating a trigger mechanism **624** on the machine gun **64** (FIGS. **13** and **35**). The handles **616** and **618** illustratively each includes a handle grip **626** having front and rear portions **628** and **630**, respectively, configured to be engaged by the palms of a gunner, and a lever arm **632** pivotably coupled to the respective handle grip **626** and configured to be engaged by the fingers of the gunner to pivot the paddles **620** and **622**. The front and rear portions **628** and **630** of each handle **616** and **618** are coupled together using conventional fasteners and extend between upper and lower arms **634** and **636** of the trigger frame **592**. A lower extension **638** is secured below each lower arm **636**. A bolt **640**, sleeve **642** and nut **644** cooperate to secure the grip **626** and lower extension **638** of the handles **616** and **618** to the trigger frame **592**.

A multiple position momentary switch **650** is supported within a housing **652** of each front portion **628** of handles **616** and **618**. The switches **650** are positioned for easy activation by the thumbs of a gunner holding the grips **626** of handles **616** and **618**. Each switch **650** has a neutral or off center position, an up position, and a down position. In the up position, a gunner's headset microphone (not shown) may be placed in communication with a transceiver (for example to the pilot or other crew members). In the down position, a laser target device (not shown) may be provided to assist in locating and/or tracking desired targets.

With reference to FIGS. **37** and **38**, paddles **620** and **622** are configured to pivot downwardly to engage rollers **654** of the trigger mechanism **624** of the machine gun **64**. More particularly, pulling lever arms **632** toward the grips **626** pivot the paddles **620** and **622** downwardly into engagement with the rollers **654** of the trigger mechanism **624**. The rollers **654** may be spring biased upwardly to return the paddles **620** and **622**, and in turn the lever arms **632**, to a rest position. The lever arms **632** are coupled to the paddles **620** and **622** through a pivot rod **656**. Keys **658** and cooperating set screws **661** and **662** prevent rotation of the rod **656** relative to the paddles **620**, **622** and lever arms **632** (FIG. **38**).

Referring now to FIGS. **37** and **38**, an electrical actuator, such as a solenoid **660**, is coupled to the frame **592** and is configured to be operated remotely, illustratively by the pilot of the helicopter **14**. The solenoid **660** may be of conventional design as including a shaft **663** received for movement within an outer housing **664** in response to an electrical signal. A mounting cup **666** may receive the outer housing **664** of the solenoid **660** and be secured to a mounting tab **668** of the trigger frame **592** through conventional fasteners, such as bolts **670**.

A linkage **672** illustratively couples the solenoid **660** to the paddles **620** and **622**. The linkage **672** includes a coupler **674** operably coupled to the movable shaft **663** of the solenoid **660**. The linkage **672** includes arms **676** and **678** extending upwardly from the coupler **674** and supporting a horizontal cross-member **680**. The cross-member **680** is received within notches **682** formed in an upper surface of the paddles **620** and **622**. During operation, the shaft **663** of the solenoid **660** pulls the linkage **672** downwardly such that the cross-member **680** pulls the paddles **620** and **622** downwardly into engagement with the trigger mechanism **624** of the machine gun **64** in the manner detailed above. As such, manual operation of the lever arms **632** by the gunner and electrical actuation of the solenoid **660** by the pilot causes similar operation of the machine gun **64**, without requiring any special modification of the machine gun **64**.

A switch **684** is supported within a housing **686** coupled to the frame **592**. The switch **684** is configured to be manipulated by the gunner to selectively provide power to the solenoid **660** (i.e., place the machine gun **64** in remote electrical mode of operation). A visual indicator, illustratively a light emitting diode **688**, is activated when the weapon mounting system **10** is in the remote electrical mode of operation for fixed forward fire by the pilot (i.e., the machine gun **64** is in the position shown in FIGS. **1** and **28**). In certain illustrative embodiments, sensors (not shown) may provide an interlock to prevent remote electrical operation of the machine gun **64** when the machine gun **64** is not in the fixed forward fire position of FIG. **1**.

Integration of the solenoid **660** within the trigger assembly **83** permits for firing of the machine gun **64** in both manual mode of operation (e.g., by the gunner from the gunner's window of the helicopter **14**) and remote electrical mode of operation (e.g., by the pilot from the front end of the helicopter **14**). Both of these modes of operation are accomplished without any modifications required of the machine gun **64**

and, as such, reduces logistical or inventory concerns and expenses associated with the system **10**.

A charge lever **690** is pivotably coupled to the trigger frame **592**. A cable **692** couples the charge lever **690** to a conventional charging assembly **694** on the machine gun **64** (FIG. **18**). The charge lever **690** includes a handle **696** and an arm **698** secured to the pivot rod **608**. A key **700** and set screws **702** prevent relative rotation of the charge lever **690** and the pivot rod **608**. A screw **704** and washer **706** secure the arm **698** to the pivot rod **608**. A stop member **708** is secured to the pivot rod **608** and is configured to engage a limit member **710** secured to the bracket **606** to limit rotation of the charge lever **690**. As the gunner pulls the handle **696** of the charge lever **690** rearwardly from a rest position to a charging position, the cable **692** pulls on the charging assembly **694**, thereby charging the machine gun **64**. The charging assembly **694** may be spring biased and thereby return the charge lever **690** to its rest position.

With reference now to FIGS. **40** and **41**, the ammunition canister **78** illustratively includes first and second side walls **712** and **714**, a top cover **716**, and a base **718**. The base **718** includes first and second end portions **720** and **722** secured together with an inclined intermediate portion **724**. The bottom edge **726** of each side wall **712** and **714** conforms to the profile of the base **718**. A front end wall **728** and a rear end wall **730** are coupled intermediate the side walls **712** and **714**. The front end wall **728** includes a handle **732** to assist a user in moving the ammunition canister **78**. The rear end wall **730** includes a plurality of elongated openings or sights **734** to view remaining ammunition stored in the canister **78**. A hinge **736** couples top cover **716** to the first side wall **712**, while a latch **738** cooperates with a latch plate **739** to secure the cover **716** to the second wall **714**. The ammunition canister **78** may be used on either the right side **16** or left side **18** of the helicopter **14** by locating the hinge **736** on either the first side wall **712** or second side wall **714**, respectively.

A guide chute **740** and a roller assembly **742** may facilitate transfer of the ammunition belt **76** from the canister **78** to the machine gun **64**. The roller assembly **742** may include a roller **744** rotatably supported by a pin **746** secured to the guide chute **740** through a conventional fastener, such as a clip **748** and washer **750**. As shown in the FIG. **4** mini-gun embodiment, a motorized feed device **752** may be coupled to the ammunition canister **78** to assist in feeding the ammunition belt to the gun.

With reference now to FIGS. **9**, **40**, and **41**, the ammunition canister **78** is coupled to the mounting plate **100** through front and rear brackets **140** and **142**. More particularly, front and rear mounting blocks **760** and **762** are coupled to the base **718** through conventional fasteners. Front mounting block **760** illustratively includes a body **764** supporting a tab **766** configured to be slidably received within a slot **768** of the front mounting bracket **140**. Similarly, the rear mounting block **762** illustratively includes a body **770** supporting a tab **772** configured to be slidably received within a slot **774** of the rear mounting bracket **142**. The body **764** of the front mounting block **760** illustratively includes outwardly facing first and second openings **776** and **778** to releasably receive couplers **780** and **782**, respectively. More particularly, the first opening **776** illustratively receives primary lock or coupler **780** that may be the same as securing device **260** of the type detailed above. Similarly, the second opening **778** receives secondary lock or coupler **782** that may be the same as secondary lock **300** including a spring biased pin **302**, of the type detailed above.

During installation, the ammunition canister **78** is positioned rearwardly of the mounting plate **100** and the tabs **766** and **772** are aligned with the slots **768** and **774** in the mounting brackets **140** and **142**. The spring biased pin **302** of the coupler **782** is received within the second opening **778** of the front mounting block **760**. The coupler **780** is then locked in place by rotating the handle **274** such that the securing rod **282** is threadably received within the first opening **776** of the front mounting block **760**.

While this invention has been described as having an exemplary design, the present invention may be further modified within the spirit and scope of this disclosure. This application is therefore intended to cover any variations, uses, or adaptations of the invention using its general principles. Further, this application is intended to cover such departures from the present disclosure as come within known or customary practice in the art to which this invention pertains.

The invention claimed is:

1. A weapon mounting system for a helicopter, the weapon mounting system comprising:
- a landing gear structure;
- an external mounting structure coupled to the landing gear structure;
- a tubular support post supported by the external mounting structure and defining a support post passageway;
- a tubular pintle supported by the support post and defining a pintle passageway;
- a machine gun operably coupled to the pintle; and
- an ejection collection device configured to direct spent shell casings and links from the machine gun through an ejection path, the ejection path including the pintle passageway and the support post passageway.

2. The weapon mounting system of claim **1**, further comprising:
- a weapon cradle for releasably coupling to the machine gun; and
- a carriage operably coupled to the weapon cradle and defining an elevational axis, the cradle configured to pivot about the elevational axis;
- the tubular pintle operably coupled to the carriage and defining an azimuth axis extending perpendicular to the elevational axis, the carriage configured to rotate about the azimuth axis.

3. The weapon mounting system of claim **1**, further comprising a base assembly including a base tube supporting a lower end of the support post and defining a base tube passageway and an exit opening, wherein the ejection path for the spent shell casings and links from the machine gun includes the base tube passageway from the support post passageway to the exit opening.

4. The weapon mounting system of claim **3**, wherein the base assembly includes a mounting plate coupled to a helicopter, and the exiting opening is configured to discharge the spent shell casings and links from the machine gun below the mounting plate.

5. The weapon mounting system of claim **4**, wherein the base assembly further includes a tiedown loop removably coupled to the mounting plate.

6. The weapon mounting system of claim **4**, wherein the support post is inclined relative to the pintle, such that the lower exit opening is positioned forward of the pintle.

7. The weapon mounting system of claim **6**, wherein the tubular support post is concentrically received within the base tube.

8. The weapon mounting system of claim **3**, further comprising:
- a base coupler securing the support post to the base tube, the base coupler including a plurality of securing devices, each of the securing devices including:

an upper housing;

a handle pivotably supported by the upper housing;

a lower housing having a lower end threadably secured to one of the support post and the base tube;

a securing rod supported for axial and rotational movement within the inner housing and having a lower end threadably secured within the other of the base tube and the support post; and

a detent mechanism operably coupled to the handle and configured to secure the handle in a desired angular position relative to the upper housing.

9. The weapon mounting system of claim **2**, wherein the carriage includes a base including a cylindrical side wall, the pintle having a cylindrical side wall concentrically received within the cylindrical side wall of the cylindrical side wall of the carriage, spaced apart first and second arms supported by the base, first and second pivot pins support the weapon cradle intermediate the first and second arms, an elevational limit stop member supported by at least one of the first and second arms, and a pivot plate supported by at least one of the pivot pins and configured to rotate with the weapon cradle, engagement between the pivot plate and the elevational limit stop member defining first and second elevational limit positions of the weapon cradle to limit pivoting movement of the weapon cradle about the elevational axis.

10. The weapon mounting system of claim **9**, further comprising first and second connecting wings connected to the weapon cradle and pivotably coupled to the first and second arms by the pivot pins, a locking pin supported by the carriage and configured to be received within a first recess of at least one of the connecting wings to secure the weapon cradle in a horizontal position about the elevational axis, and the locking pin configured to be received within a second recess of at least one of the connecting wings to secure the weapon cradle in a first depression position about the elevational axis.

11. The weapon mounting system of claim **10**, wherein the locking pin is configured to be received within a third recess of at least one of the connecting wings to secure the weapon cradle in a second depression position about the elevational axis.

12. The weapon mounting system of claim **2**, further comprising an arcuate azimuth stop member removably coupled to the pintle, and a projection supported for rotation with the carriage about the azimuth axis, engagement between the projection and the azimuth stop member defining first and second azimuth limit positions of the carriage to limit rotating movement about the azimuth axis.

13. The weapon mounting system of claim **12**, further comprising first and second locking pins supported for rotation with the carriage, the pintle including first and second circumferentially spaced openings, the locking pins configured to be received within the openings of the pintle to secure the carriage in desired angular positions about the azimuth axis.

14. The weapon mounting system of claim **12**, further comprising a bore sight adjustment device including an arcuate band supported by the carriage, and adjustment screws configured to adjust the angular position of the projection and the locking pins relative to the carriage.

15. The weapon mounting system of claim **2**, wherein the weapon cradle includes a shock absorber to resist recoil of the machine gun.

16. The weapon mounting system of claim **3**, further comprising an ammunition canister removably coupled to the base assembly, a securing device securing the ammunition canister to the mounting plate, including:

an upper housing;

a handle pivotably supported by the upper housing;

a lower housing having a lower end threadably secured to one of the ammunition canister and the mounting plate;

a securing rod supported for axial and rotational movement within the inner housing and having a lower end threadably secured within the other of the mounting plate and the ammunition canister; and

a detent mechanism operably coupled to the handle and configured to secure the handle in a desired angular position relative to the upper housing.

17. The weapon mounting system of claim **1**, wherein the machine gun is a .50 caliber machine gun.

18. The weapon mounting system of claim **1**, further comprising a base assembly including a support post passage extending through said base assembly adapted to receive and support a lower end of the support post and defining a support post receiver passageway and an exit opening, wherein the ejection path for the spent shell casings and links from the machine gun includes the support post receiver passageway from the support post passageway to the exit opening;

a base coupler securing the support post in the support post passage, the base coupler including a plurality of securing devices, each of the securing devices including:

an upper housing;

a handle pivotably supported by the upper housing;

a lower housing having a lower end threadably secured to one of the support post and the base tube;

a securing rod supported for axial and rotational movement within the inner housing and having a lower end threadably secured within the other of the base tube and the support post; and

a detent mechanism operably coupled to the handle and configured to secure the handle in a desired angular position relative to the upper housing.

* * * * *