The Department of Defense National Center of Excellence for First Responder Technology Transfer

Fast Response Fluid Flow Control Valve/Nozzle (Fast Flow Nozzle)

Patent No.: US 6,907,940 B1

Market Overview

Naval Surface Warfare Center (NAVSEA)-Crane Division

Crane, Indiana

May 2011

2000 Corporate Drive, Suite 300, Wexford, PA 15090
Tele: 1-724-933-3520 • Email: info@dodfirstlink.com • Website: www.dodfirstlink.com

Services provided by Pittsburgh Gateways Corp. and
Advanced Manufacturing Technology Ventures LLC

Distribution Statement A: Approved for Public Release; Distribution Unlimited

The following study was completed by FirstLink. It represents the best efforts of the FirstLink team to gather, assimilate and assess certain information pertaining to the topic at hand. It is recognized that this study analyzes certain economic conditions. As these conditions are in constant flux, neither FirstLink nor its members (Pittsburgh Gateways Corp.; AMTV, LLC or its affiliates) can be responsible for these conditions. Any decisions, actions or investment made on the subject covered are solely those of the client (Department of Defense, Department of Homeland Security, or Air Force Research Laboratory).

Distribution Statement A: Approved for Public Release; Distribution Unlimited

Table of Contents

Executive Summary **6**
1 Introduction **8**
2 Technical Synopsis **10**
2.1 Major Components and Operational Specifications 10
2.2 Prospective Advantages 24
2.3 Initial Pricing Assumptions 25
2.4 Go-to-Market Needs 26
3 Applications and Markets **27**
3.1 Civilian 29
3.1.1 Civilian Market Definition and Quantification 29
3.1.2 Civilian Market Drivers and Influences 41
3.2 Military Market 60
3.2.1 Military Market Definition and Quantification 60
3.2.2 Military Market Drivers and Influences 71
4 Competitive Landscape **72**
4.1 Existing Technologies 74
4.2 Competitive Ability 76
4.3 Key Competitors and Potential Licensing and Partnership Targets 77
5 Cautions and Considerations **83**
5.1 Approvals and Manufacturing Considerations 83
5.2 Montreal Protocol 83
5.3 Switching Cost 84
6 Conclusion **88**
Appendix A: List of Nuclear Facilities in the United States **91**
Appendix B: Evaluation of Fike® Corporation's Explosion Suppression System for Ultra-High Speed Fire Suppression Applications **97**
Appendix C: Blast Initiated Deluge System Assessment-AFRL **109**

Distribution Statement A: Approved for Public Release; Distribution Unlimited

Table 1 : Fast Response Fluid Flow Control Valve/Nozzle 16
Table 2: Detailed View of Chamber Base 18
Table 3 : Jet Core Side, Cross-Sectional View (A) and Composite Front View (B)..... 20
Table 4: Retention Ring Composite Front View (A) and Side, Cross-sectional View (B) 22
Table 5: Nozzle Port End Perspective View (A) and 24
Table 6: Fast Flow Nozzle Prospective Advantages and Detail 24
Table 7: Fast Flow Nozzle Prospective Manufacturing Cost 25
Table 8: NAICS 32-33, Explosives and Ammunition 2007 Economic Census 31
Table 9: NAICS 331 Fabricated Metal Manufacturing, 2007 Economic Census..... 31
Table 10:Select NAICS Codes..... 36
Table 11Installations, Removals, and Cumulative Totals of Offshore Production Facilities in Federal Waters: 1959-2010 39
Table 12: Industrial Disasters with Explosive Incidents 42
Table 13: CSB Completed Investigations..... 46
Table 14: Disaster Definitions..... 49
Table 15: Natural Disasters by Type..... 51
Table 16: Summary Natural Hazard Statistics for 2009 in the United States 52
Table 17: 2011 Wildfire Statistics..... 57
Table 18: Number of DoD Facilities by Type, Worldwide..... 62
Table 19FY2011 Overseas Contingency Operations (OCO) Budget: 64
Table 20: Major DoD Acquisition 66
Table 21: FLC Laboratories by Department or Agency..... 68
Table 22: Existing Suppression Systems..... 76
Table 23: Fire Suppression Market Players 78
Table 24: Fast Flow Nozzle Prospective Advantages and Detail..... 86
Table 25: Fast Flow Nozzle Prospective Advantages and Detail 88

Distribution Statement A: Approved for Public Release; Distribution Unlimited

Figure 1: Side Crossectional-View of Fast Response Fluid Flow Control Valve/Nozzle 14
Figure 2: Exploded View of Fast Response Fluid Flow Control Valve/Nozzle 15
Figure 3: Detailed View of Chamber Base 17
Figure 4: Jet Core Side, Cross-Sectional View (A) and Composite Front View (B) 19
Figure 5: Retention Ring Composite Front View (A) and Side, Cross-sectional View (B) 21
Figure 6: Nozzle Port End Perspective View (A) and 23
Figure 7: North American Fire Suppression System Market 2005-2013 28
Figure 8: Gulf of Mexico Offshore Production Facilities 1959-2009 38
Figure 9: Percent Distribution, Manner in which Fatal Work Injuries Occurred: 2008 43
Figure 10: Percent Distribution, Manner in which Fatal Work Injuries Occurred in Multiple-Fatality Incidents: 2008 44
Figure 11: Disaster Events, 2008 50
Figure 12: Wind Zones in the United States 53
Figure 13: Tornado Activity 55
Figure 14: Nuclear Facilities in the United States 56
Figure 15: Fires and Acres Burned 2000-2011 58
Figure 16: US Drought Monitor, May 31, 2011 59
Figure 17: Observed Fire Danger Class, U.S. June, 2011 60
Figure 18: Geographic Distribution of Department of Defense (DoD) Sites 62
Figure 19: FY 2011 Overseas Contingency Operations (OCO) Budget: $159.3 Billion 64
Figure 20: FY 2011 Major Defense Acquisition Program (MDAP) Budget: 65
Figure 21: FY 2011 Military Construction Budget Allocation: $16.9 Billion 67
Figure 22: Federal Laboratory Distributions Across the U.S. 69
Figure 23: Geographic Representation of Federal Laboratories 69
Figure 24: North America Fire Suppression Systems Market 2005-2013 72

Distribution Statement A: Approved for Public Release; Distribution Unlimited

Executive Summary

A Fast Response Fluid Flow Control Valve/Nozzle has been developed by the Naval Surface Warfare Center (NAVSEA)-Crane Division in Crane, Indiana. The Fast Flow Nozzle is designed to optimize water delivery volume and speed in the event of an explosion or fire and provides a fast-acting technology for a fire suppression system to combat aggressive, fast-moving, high-temperature fires. The Fast Flow Nozzle is claimed to significantly outperform existing nozzles on the market in terms of both water volume delivery and response speed.

This analysis provides a general overview of the Fast Flow Nozzle and prospective market opportunities. The primary markets examined within which the Fast Flow Nozzle may find relevance include, but are not limited to; the *civilian* and *military fire suppression markets*. Each potential market is defined, quantified, and market drivers and influences are explored. A summary of the information contained within the full assessment is provided below.

Technical Synopsis

The Fast Flow Nozzle is used for high-speed fire suppression systems. The prospective advantages of the Fast Flow Nozzle include:

- A fast response in the rupture and flow of material (goal is <1 millisecond),
- The modified nozzle sprays 300-350 GPM compared to the standard 20-25 GPM system therefore the nozzle delivers water at fifteen times the efficiency of existing fire suppression systems,
- The technology may be retrofitted to fixed pipe systems to provide virtually unlimited extinguishing material in only 10-15 milliseconds (cutting response time in half),
- The flow rate from one nozzle is sufficient to replace up to six traditional valve heads which allows for a cost savings,
- Allows for retrofitting of existing systems,
- Can achieve higher flow rate using existing piping,
- Has passed testing by the Navy at Crane lab,
- Strength and durability to perform in fire situations,
- The nozzle is a high value product with a low lifetime cost, and
- The portable system prototype is more convenient and affordable than current fire suppression systems.

At this time, the largest hurdle on the path to commercial market adoption is the procuring of a low cost, high performance gas generator that meets the power requirements of the nozzle delivery goals. Currently considered generators may price the overall unit out of some prospective end users' purchasing capacity. As such, an important step in moving toward commercialization is identifying potential partners that may be able to optimize gas generator performance while minimizing unit cost.

Distribution Statement A: Approved for Public Release; Distribution Unlimited

Markets and Competitive Landscape

The Fast Flow Nozzle may find specific advantages in situations where traditional fire suppression systems are slower than the speed of onset and expansion of local high-intensity, and explosives fires. Within this context, the *Civilian* and *Military* markets are defined, quantified, and examined for potential opportunity. In addition drivers and influences of both markets are examined.

Competition for the Fast Flow Nozzle includes current suppression systems that are said to exhibit considerably slower response times than the Fast Flow Nozzle. The slower response time of existing technologies may not be adequate to contain or extinguish high intensity explosions and fires.

This section also identifies potential licensee and partnership targets by examining highly competitive and well positioned firms within the fire suppression industry. Also considered is the Fast Flow Nozzle's ability to be seamlessly implanted into existing product lines.

Conclusion

In closing, this market overview identifies several go-to-market needs of the Fast Flow Nozzle including:

- The need for additional testing to verify its suitability for use on various types of fires;
- The need for faster suppression of particularly aggressive fires; and
- The need for a procurement strategy of a suitable and cost-effective gas generator unit

That said, the advantages of the Fast Flow Nozzle may provide the impetus to resolve the go-to-market needs, particularly in a military fire emergency. The key advantage that the Fast Flow Nozzle provides is the ability to suppress a fire in 10-15 milliseconds, versus 35 milliseconds for the currently fielded systems, which may provide enhanced suppression capabilities in applications such as munitions manufacturing where lag time between a fire or explosion initiation and suppression response may be critical in mitigating damage or loss of life.

Ultimately, market penetration for the Fast Flow Nozzle may hinge largely on the ability of prospective licensees to procure a suitable gas generator component that does not price the unit out of the appropriate market for fire suppression systems. Additionally, targeting prospective licensees or partners that have established paths to market in terms of sales and distribution channels, as well as an established and highly regarded foot in the market may work to enhance market penetration strategies. As claimed performance greatly surpasses that of currently commercialized systems, initial, and subsequently wider, adoption of the Fast Flow Nozzle may depend on the ability to develop a comprehensive system that falls in line with prospective end user purchasing capacity.

Distribution Statement A: Approved for Public Release; Distribution Unlimited

1 Introduction

A Fast Response Fluid Flow Control Valve/Nozzle (Fast Flow Nozzle) has been developed by the Naval Surface Warfare Center (NAVSEA)-Crane Division in Crane, Indiana. The Fast Flow Nozzle provides a fast-acting technology for a fire protection/suppression system to combat aggressive, fast-moving, high-temperature fires.

In light of the Fast Flow Nozzle's ease-of-use for emergency fire situations, it may provide the following advantages:

- *A fast response in the rupture and flow of material (goal is <1 millisecond),*
- *The modified nozzle sprays 300-350 GPM compared to the standard 20-25 GPM system therefore the nozzle delivers water at fifteen times the efficiency of existing fire suppression systems,*
- *The technology may be retrofitted to fixed pipe systems to provide virtually unlimited extinguishing material in only 10-15 milliseconds (cutting response time in half),*
- *The flow rate from one nozzle is sufficient to replace up to six traditional valve heads which allows for a cost savings,*
- *Allows for retrofitting of existing systems,*
- *Can achieve higher flow rate using existing piping,*
- *Has passed testing by the Navy at Crane lab,*
- *Strength and durability to perform in fire situations,*
- *The nozzle is a high value product with a low lifetime cost, and*
- *The portable system prototype is more convenient and affordable than current fire suppression systems.*

In addition to examining the Fast Flow Nozzle's key components and operation, and how the advantages may be achieved, this assessment provides an overview of the potential opportunity within the military and civilian markets. This report is broken down as follows:

- Technical Synopsis and Applications
- Markets
- Competitive Synopsis
- Cautions and Considerations

Ultimately, the Fast Flow Nozzle is designed to facilitate emergency fire response in civilian and military situations. Based on the data examined, indicators appear positive but are matched by several go-to-market needs including the procurement of a cost-effective gas generator component. It is important to note that this analysis is not undertaken in an effort to dictate

Distribution Statement A: Approved for Public Release; Distribution Unlimited

commercialization strategies or to recommend a specific market application. Rather, a general overview of the Fast Flow Nozzle's functionality and the markets to which it may enter are provided for further strategic analysis.

Distribution Statement A: Approved for Public Release; Distribution Unlimited

2 Technical Synopsis

A Fast Response Fluid Flow Control Valve/Nozzle (Fast Flow Nozzle) has been developed by the Naval Surface Warfare Center (NAVSEA)-Crane Division in Crane, Indiana. The Fast Flow Nozzle provides a fast response fluid flow control valve/nozzle for use in high-speed, high-temperature fire protection/suppression systems of the type having an essentially unlimited supply of fire extinguishing/suppressing materials. This technology provides a fast response fluid flow control valve/nozzle with a frangible, or easily broken, element that will not the flow of the fire extinguishing/suppressing materials after the system is activated.

2.1 Major Components and Operational Specifications[1]

Figure 1 is a side cross-sectional view while Figure 2 is an exploded view of a fast response fluid flow control valve/nozzle. Table 1 gives the names of the components and corresponding figure numbers in the diagrams of Figure 1 and Figure 2.

As shown in Figure 2, the frangible disk **40** is preferably a rupture disc assembly commercially available from the Oklahoma Safety Equipment Company (OSECO) of Broken Arrow, OK. The disc assembly **40** generally comprises a stainless steel spherically curved disc **42** and a base **41** formed from two stainless steel rings **44**, **45**. The rings **44**, **45** and disc **42** are fixedly attached (e.g., welded) in order to form the finished assembly **40**. The disc assembly is designed to rupture at a pressure of 300 psi (OSECO's disc design provides for rupture pressures from 160 to 4,000 psi as specified). Ring **44** includes an o-ring groove **46** to assist in providing a water-tight seal between the disc assembly **40** and the jet core **30**.

Figure 3 and Figure 4 gives a detailed view of the chamber base. Table 2 gives the names of the components and corresponding figure numbers in the diagrams of Figure 3 and Figure 4. The chamber base **20** comprises a base and outer walls of a chamber **21** of varying diameters, internal threads **22A** at one end, internal threads **22B** and external threads **23** at the opposite end, an actuator mounting port **24**, an air bleed port **26**, a plurality of key pin holes **29** formed in the end **28** proximate the external threads **23**, and an o-ring groove **34**. The actuator mounting port **24** and the air bleed port **26** are in fluid communication with the internal chamber **21** and positioned 180E apart on the external surface near the end with the internal threads **22A**. The internal threads **22A** represent the means (i.e. a fire suppressant inlet port **80**, as in Figure 1) for creating a threaded connection between the valve/nozzle **10** a typical high-speed fire protection/suppression piping system. A hexagonal cross-section **25** is formed in the external surface of the chamber base **20**, at the end that includes the internal threads **22A**, to further facilitate the making of the aforementioned threaded connection. The chamber base **20** is

[1] Ahlers, Jeffrey, "Fast Response Fluid Flow Control Valve/Nozzle," U.S. Patent 6,907,940 B1 June 21, 2005.

Distribution Statement A: Approved for Public Release; Distribution Unlimited

preferably fabricated of commercially available, round stainless steel stock. Other strong and light-weight materials, such as titanium, may also be used for construction of the chamber base.

Figure 5 shows a composite front view (B) and side cross-sectional view (A) of a jet core **30**. Table 3 gives the names of the components and corresponding figure numbers of Figure 5. The jet core **30** comprises a central bore **31**, external threads **32** at one end **38**, an o-ring groove **35** formed in its external surface **36**, and a plurality of channels **37** formed to provide fluid communication between the external surface **36** and the end **38** proximate the external threads **32**. The jet core **30** is preferably fabricated of commercially available, round stainless steel stock. Other strong and light-weight materials such as titanium may also be used for construction of the jet core.

Figure 6 shows a composite front view (A) and side, cross-sectional view (B) of a retention ring **50**. Table 4 gives the names of the components and corresponding figure numbers of Figure 6. The disc retention ring **50** comprises a central bore **51**, an o-ring groove **55** formed in its external surface **53**, and a plurality of key pins **52** seated (e.g. press or friction fit) around the periphery of one end **56**. The disc retention ring **50** is preferably fabricated of commercially available, round stainless steel stock. Other strong and light-weight materials such as titanium may also be used for construction of the retention ring.

Figure 7 is a composite side, cross-sectional view (B) and end perspective view (A) of a nozzle port **60**. Table 5 gives the names of the components and corresponding figure numbers of Figure 7. The nozzle port **60** comprises a central bore **61** of varying diameters and internal threads **62**, **63** at both ends. The smaller diameter internal threads **62** represent the means for creating a threaded connection (i.e. a fire suppressant discharge port **90**, as in Figure 1) between the valve/nozzle **10** and the spray/dispersion nozzle used in a typical high-speed fire protection/suppression (not shown in the Figures). A hexagonal cross-section **64** is formed in the external surface of the nozzle port **60**, at the end that includes the smaller diameter internal threads **62**, to further facilitate the making of the aforementioned threaded connection. The nozzle port **60** is preferably fabricated of commercially available, round stainless steel stock. However, other strong, yet lightweight, materials such as titanium can be used.

As shown in Figures 1 and 2, the pressure cartridge actuator **75** is preferably a device commercially available from McCormick Selph, Inc. of Hollister, CA under part no. 817444-5. Upon actuation, the cartridge **75** generates a pressure in excess of 300 psi within the chamber base **20** and the channels **37** of the jet core **30** in order to rupture the disc assembly **40**.

With collective reference to Figures 1-7, the fast response fluid flow control valve/nozzle **10** is assembled as follows. The two commercially-available o-rings **70**, **71** are placed in the o-ring grooves **34**, **35**, respectively, found in the chamber base **20** and on the external surface **36** of the jet core **30**. The jet core **30** is inserted into the internal chamber **21** of the chamber base **20** such that its external threads **32** engage the base's internal threads **22B**. The chamber base **20** and jet

Distribution Statement A: Approved for Public Release; Distribution Unlimited

core **30** are thus screwed together until the smaller o-ring **70** engages the leading end **33** of the jet core **30** and the larger o-ring **71** engages an angled internal surface **27A** of the base **20**. The base **41** of the disc assembly **40** is placed in position against an internal face **54** of the retention ring **50** such that its spherical surface **42** curves toward the face **54**. O-rings **72, 73** are placed in grooves **55**, **46**, respectively. The combination of retention ring **50**, disc assembly **40**, and o-rings **72**, **73** is attached in a releasable manner to the previously created sub-assembly of the chamber base **20** and jet core **30** by aligning and engaging the plurality of key pins **52** on the retention ring **50** with the plurality of holes **29** formed in the chamber base **20**. The joining of these components serve to compress o-ring **73** within groove **46** against end surface **38** of the jet core **30** and to engage o-ring **72** with an internal surface **27B** of the chamber base **20**, thereby trapping the disc assembly **40** between the core **30** and the ring **50**. The nozzle port **60** is attached to the resulting sub-assembly by engaging internal threads **63** of the nozzle port **60** with the external threads **23** of the chamber base **20**. Finally, the cartridge actuator **75** is attached in a releasable manner to the chamber base **20** via the internal threads **76** located within the mounting port **24**.

The operation of the valve/nozzle **10**, after its installation in a typical fixed pipe high-speed fire protection/suppression system, once any trapped air is removed from the chamber through bleed port **26** (a conventional bleeder valve can be used for this purpose but is not shown in the Figures), is as follows. The valve/nozzle assembly **10** contains an internal chamber **12** that is pressurized to more than 300 psi by the initiation of the cartridge actuator **75** upon the detection of a fire/explosion. The pressure wave created by the actuator's initiation is directed through the channels **37** and against the underside (i.e. convex) surface **42** of the frangible disc **40** in order to rupture the disc **40** and release the fire extinguishing/suppressing material that enters through inlet port **80** and exits through a dispensing nozzle attached to the discharge port **90**.

As is readily perceived in the foregoing description, the fast response fluid flow control valve/nozzle **10** of the present invention combine the technology used to rupture the frangible discs found in container-based fire protection/suppression systems with that found in fixed pipe, high-speed spray/sprinkler systems. The present invention applies over-pressurization technology to a significantly smaller chamber **12** contained within the fast response fluid control valve/nozzle **10** that is virtually isolated from the essentially unlimited supply of fire extinguishing/suppressing material. The design of the valve/nozzle **10** directs the over-pressurization created in the chamber **12** through the channels **37** in the jet core **30** to create a small, localized pressure wave on the underside of the frangible disc assembly **40**. The pressure wave is, due to its localized nature, sufficient to rupture the disc assembly **40** in an extremely rapid manner without generating any flow disrupting back pressure that would delay the discharge of the fire extinguishing/suppressing material through the fast response fluid flow

Distribution Statement A: Approved for Public Release; Distribution Unlimited

control valve/nozzle **10**. The present invention is scalable to provide for use in a variety of applications, fabricated of materials that provide the durability/longevity required by the nature of its use, capable of being retrofitted to existing fixed pipe fire protection/suppression systems, and economical to manufacture in order to provide for widespread use.

Distribution Statement A: Approved for Public Release; Distribution Unlimited

Figure 1: Side Crossectional-View of Fast Response Fluid Flow Control Valve/Nozzle

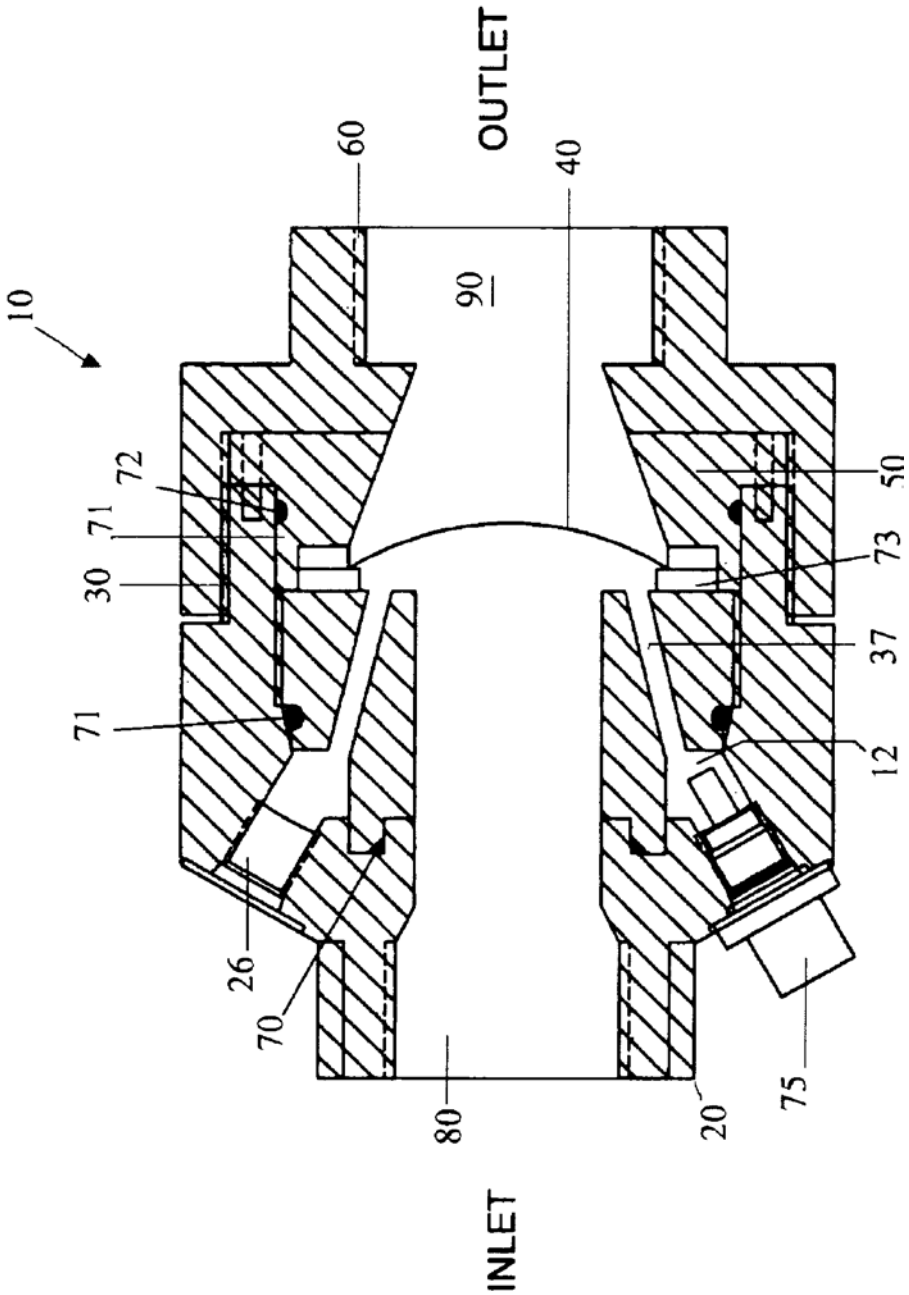

Distribution Statement A: Approved for Public Release; Distribution Unlimited

Figure 2: Exploded View of Fast Response Fluid Flow Control Valve/Nozzle

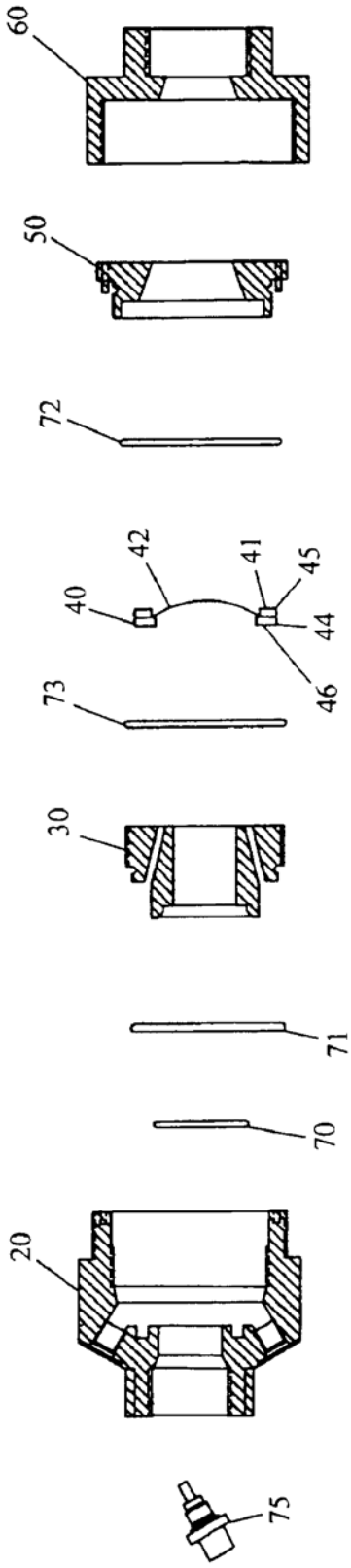

Distribution Statement A: Approved for Public Release; Distribution Unlimited

Table 1 : Fast Response Fluid Flow Control Valve/Nozzle Components and Diagram Numbers of Figures 1 and 2	
Fast Response Fluid Flow Control Valve/Nozzle	10
Chamber Base	20
Jet Core	30
Channel	37
Frangible Disc	40
Base	41
Stainless Steel Spherically Curved Disc	42
Stainless Steel Ring	44
Stainless Steel Ring	45
O-Ring Groove (to provide a water-tight seal between the disc assembly and the jet core)	46
Disc Retention Ring	50
Nozzle Port	60
Plurality of O-Rings	70-73
Pressure Cartridge	75
Fire Suppressant Inlet Port	80

Distribution Statement A: Approved for Public Release; Distribution Unlimited

Figure 3: Detailed View of Chamber Base

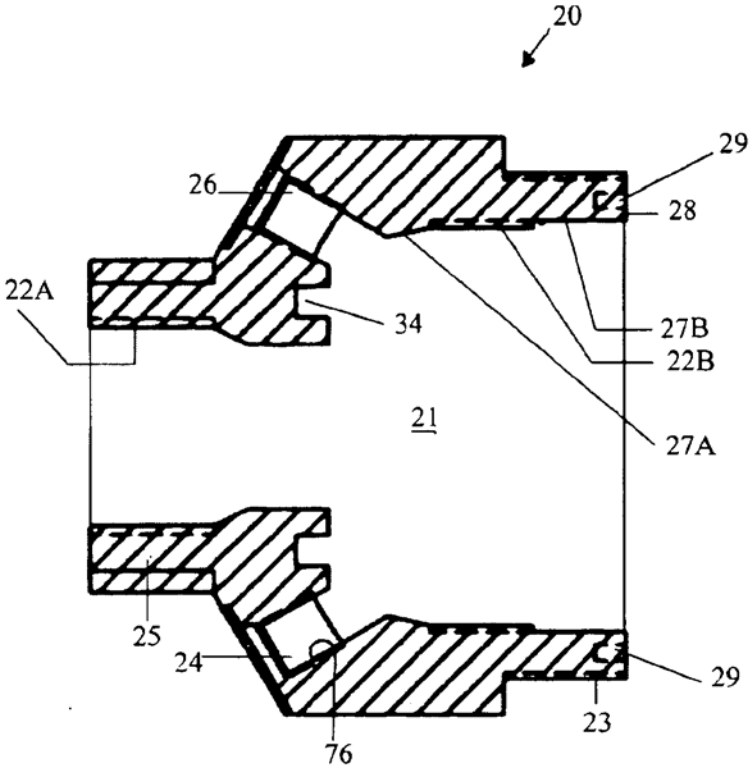

Figure 4: Detailed View of Chamber Base

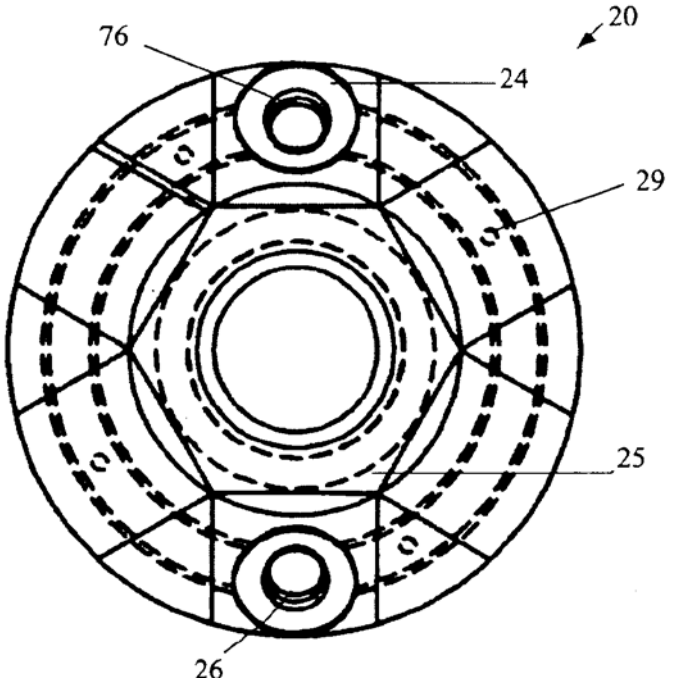

Distribution Statement A: Approved for Public Release; Distribution Unlimited

Table 2: Detailed View of Chamber Base Components and Diagram Numbers of Figures 3 & 4	
Chamber Base	20
Base and Outer Walls of an Internal Chamber with Varying Diameters	21
Internal Threads	22A
Internal Threads	22B
External Threads	23
Actuator Mounting Port	24
Hexagonal Cross-section	25
Air Bleed Port	26
Angled Internal Surface	27A
A Plurality of Key Pin Holes	29
End	28
O-ring Groove	34
Internal Threads	76

Distribution Statement A: Approved for Public Release; Distribution Unlimited

Figure 4: Jet Core Side, Cross-Sectional View (A) and Composite Front View (B)

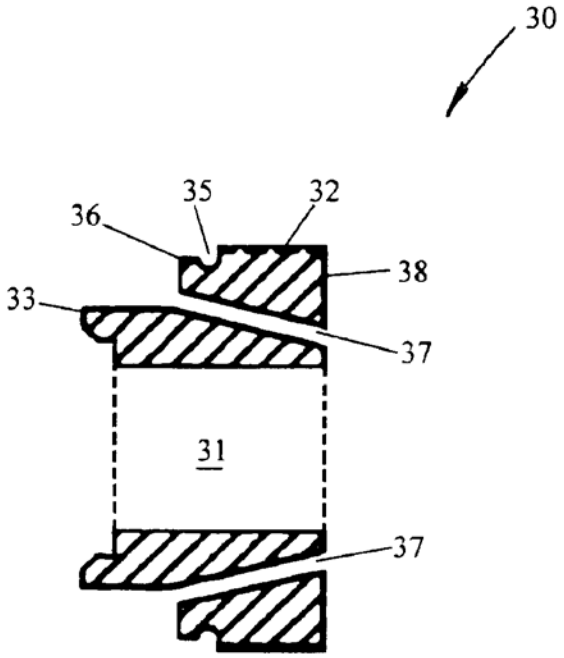

A

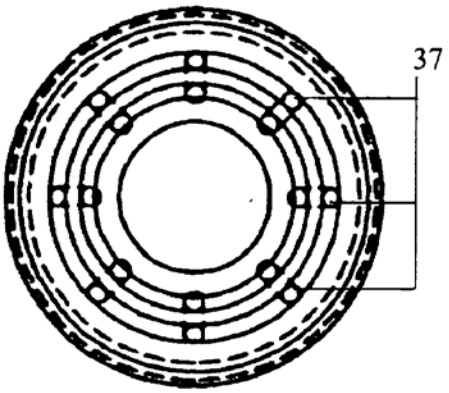

B

Distribution Statement A: Approved for Public Release; Distribution Unlimited

Table 3 : Jet Core Side, Cross-Sectional View (A) and Composite Front View (B) Components and Diagram Numbers of Figure 5	
Jet Core	30
Central Bore	31
External Threads	32
Leading End	33
O-Ring Groove	35
External Surface	36
Plurality of Channels	37
End Surface	38

Distribution Statement A: Approved for Public Release; Distribution Unlimited

Figure 5: Retention Ring Composite Front View (A) and Side, Cross-sectional View (B)

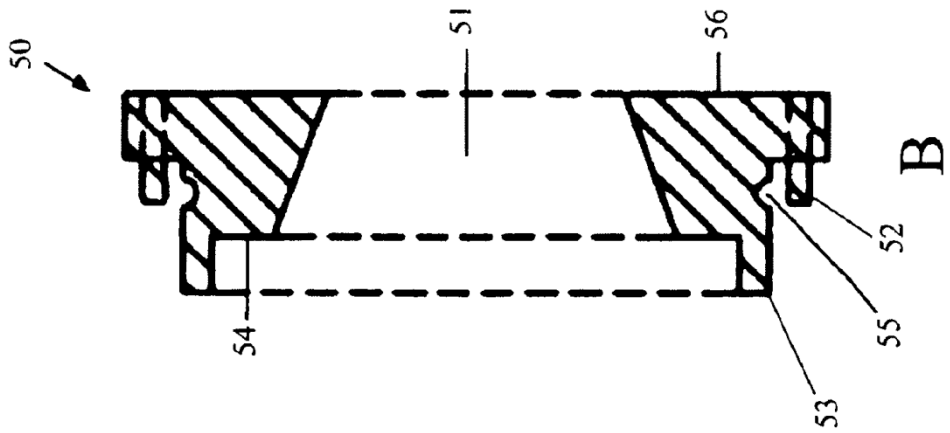

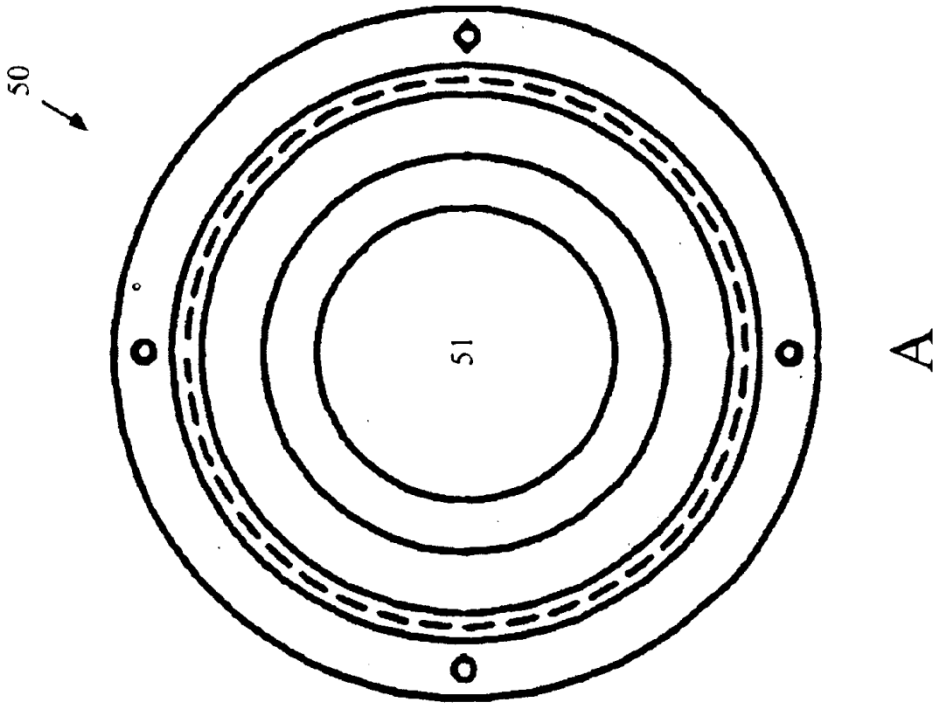

Distribution Statement A: Approved for Public Release; Distribution Unlimited

Table 4: Retention Ring Composite Front View (A) and Side, Cross-sectional View (B) Components and Diagram Numbers of Figure 6	
Retention Ring	50
Central Bore	51
External Surface	53
Plurality of Key Pins	52
O-Ring Groove	55
Internal Face	54
End	56

Distribution Statement A: Approved for Public Release; Distribution Unlimited

Figure 6: Nozzle Port End Perspective View (A) and Composite Side, Cross-sectional View (B)

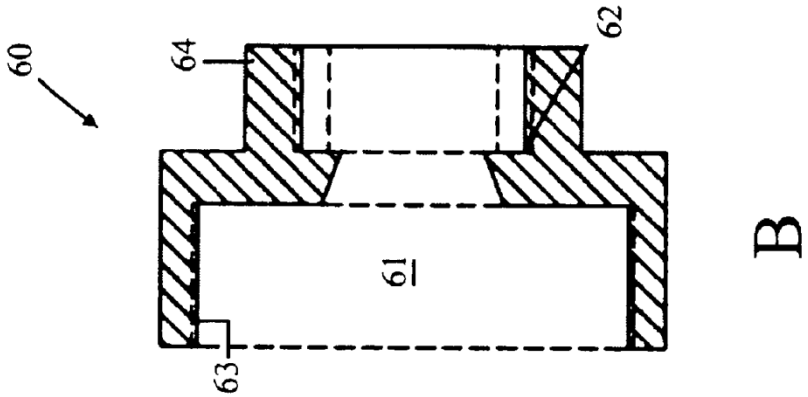

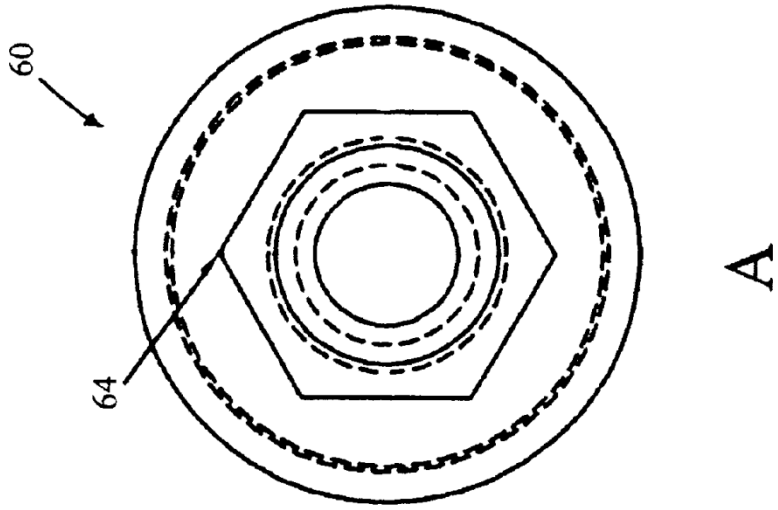

Distribution Statement A: Approved for Public Release; Distribution Unlimited

Table 5: Nozzle Port End Perspective View (A) and Composite Side, Cross-sectional View (B) Components and Diagram Numbers of Figure 7	
Nozzle Port	60
Central Bore of Varying Diameter	61
Smaller Diameter Internal Threads	62
Internal Threads	63
Hexagonal Cross-section	64

2.2 Prospective Advantages

Understanding that the core function of the Fast Flow Nozzle is fire suppression, some of the prospective advantages of this technology are summarized in Table 6.

Table 6: Fast Flow Nozzle Prospective Advantages and Detail	
Prospective Advantage	**Detail**
A fast response in the rupture and flow of fire suppressing material	The goal is <1 millisecond.
The modified nozzle sprays 300-350 GPM compared to the standard 20-25 GPM system.	The nozzle delivers water at fifteen times the efficiency of existing fire suppression systems.
The technology may be retrofitted to fixed pipe systems to provide virtually unlimited extinguishing material in only 10-15 milliseconds.	This cuts response time in half versus standard systems.
The flow rate from one nozzle is sufficient to replace up to six traditional valve heads	Due to the fewer Fast Flow Nozzles which are required versus traditional valve heads, a cost savings may be realized.
Can achieve higher flow rate using existing piping.	Allows for retrofitting of existing systems.

Distribution Statement A: Approved for Public Release; Distribution Unlimited

Has passed testing by the Navy at Crane lab	Initial testing and proof of testing may provide foundational research and reduce overall cost associated with additional R&D required to commercialize the nozzle
Has strength and durability to perform in fire situations	This enables the valve to be used in situations where high heat an intensity may reduce performance capabilities of competing nozzles
The nozzle is a high value product with a low lifetime cost.	The overall life cycle cost is believed to be within the range of prospective end users' purchasing capabilities
The portable system prototype is more convenient and affordable than current fire suppression systems.	Performance capabilities significantly enhance existing systems, providing enhanced delivery

2.3 Initial Pricing Assumptions

A Fast Flow Nozzle is not presently available commercially. However, inventor correspondence reveals the following potential price structure:[2]

Table 7: Fast Flow Nozzle Prospective Manufacturing Cost	
Component	**Price**
Gas Generator	$250-$800 (Higher threshold has been articulated to accurately convey current cost)
System Cost (Including tooling costs, and tailoring system to specific client requirements)	$4500

In addition to the above cost estimates, it has also been conveyed that end-user pricing structures would most likely be customized to the specific needs of an end-user.

[2] Note: Phone interview with inventor, Jeff Ahlers, on June 8, 2011.

Distribution Statement A: Approved for Public Release; Distribution Unlimited

That said, this assessment will move to identify the markets for which the Fast Flow Nozzle may have the greatest market relevance and evaluate potential market opportunity that may exist for fire protection/suppression products such as the Fast Flow Nozzle.

2.4 Go-to-Market Needs

As the Fast Flow Nozzle splint is not yet fully developed or available commercially, several go-to-market needs may exist and as such, this assessment will briefly identify and discuss several considerations. While this assessment explores several go-to-market needs, this list may not be exhaustive.

To date, field and fire testing have yielded positive results. Additionally, all Navy test requirements have been completed and high speed video and thermal imaging have been conducted. It should be ensured that the Fast Flow Nozzle is fast acting on all types and intensities of fires. At present, the Fast Flow Nozzle has been tested in a number of environments, and is the only known system capable of extinguishing MG Green (raw grain) flare fires.[3]

Also, there is a need to identify prospective licensees. As the market section will show, prospective licensees could be a large supplier of fire protection or suppression or a small innovator or business. In determining a suitable licensee, consideration should be given to identifying an entity with existing expertise or who can easily obtain expertise with the Fast Flow Nozzle equipment.

Note may also be made that in terms of commercialization and go-to-market-needs, the major component required at this stage for taking the nozzle to market is a gas generator component.[4] Sourcing a cost-effective generator remains the major hurdle in commercialization, as initial estimates priced the gas generator at roughly $250; however, generator cost may range between $250 and $800, based on generator specifications.[5] This may represent a point of consideration when evaluating potential licensees, as prospective licensees with experience in developing systems with generators similar to that required by the Fast Flow Nozzle may be attractive licensing targets.

[3] Ibid

[4] Ibid

[5] Ibid

Distribution Statement A: Approved for Public Release; Distribution Unlimited

3 Applications and Markets

Applications

This assessment understands the core application of the Fast Flow Nozzle to be civilian and military high-speed, high-temperature fire protection/suppression markets.

The civilian or military applications could be for existing fixed pipe system retrofits, new pipe systems, or portable systems. Situations in which the higher flow rates and improved rupture times are particularly applicable include for protection against explosives and energetics local fires.

While it is understood that this is the main application for the Fast Flow Nozzle, this assessment will work to uncover additional markets for which other applications may exist.

Markets

Recognizing the core applications of the Fast Flow Nozzle to reside primarily within the civilian and military high-speed, high-temperature fire protection/suppression markets, these are primary markets which may benefit from said application.

Therefore primary markets for this assessment are:

- Civilian Market
- Military Market

These markets are defined and quantified, and market drivers and influences are examined. Emphasis is placed on markets within the United States, as initial points of entry will likely be domestic.

Prior to an examination of the civilian and military markets in isolation, it may serve well to take a broad perspective of the overall fire suppression systems market. A report released by Global Industry Analysis estimates that the market for fire suppression systems in North America and Europe will grow to $1.6 billion dollars by 2014.[6] Rising levels of industrial investment and greater safety requirements and technological advances are said to drive sustained growth in this market. The report also makes note that technologies that work to optimize effectiveness *and* environmental impact may be favorable to the market as new "green" systems are developed and integrated into suppression platforms.[7]

[6] "Fire Suppression Systems Market to Reach $1.6 Billion by 2014, According to New Report by Global Industry Analysts." *PR Web*. Vocus PRW Holdings, LLC, 17 Feb 2009. Web

[7] Ibid

Distribution Statement A: Approved for Public Release; Distribution Unlimited

An additional report released by Frost and Sullivan entitled *North American Fire Suppression Systems Market* projects that the North American market for fire suppression systems is expected to grow from $591 million in 2005 to roughly $955 million in 2013, with a compound annual growth rate of 5.6%.[8] The graph below articulates the North American revenue projections outlined by Frost & Sullivan:

Figure 7: North American Fire Suppression System Market 2005-2013

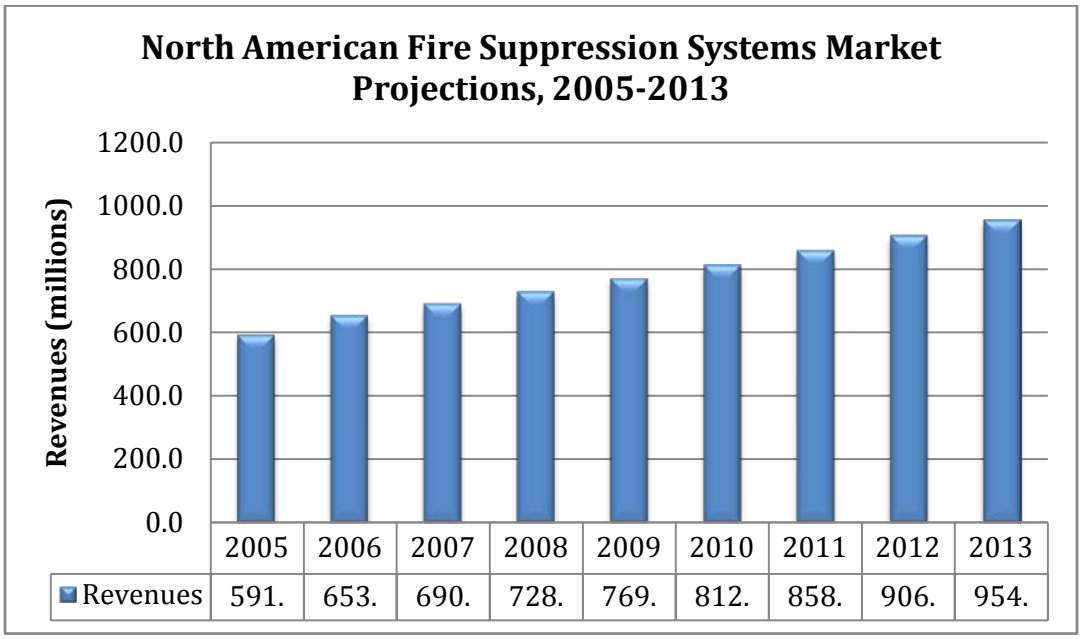

In addition to new building construction and renovation projects, the report also cites security concerns for commercial and industrial sites as a driving force in the market growth for fire suppression systems. In addition to traditional sprinkler systems, industrial applications for manufacturing may work to drive market growth in a positive manner.[9]

One point of consideration within the context of this assessment may be that while neither of the reports discussed above break the market down by civilian and military consumption, it is understood that overall revenues reviewed account for both.

Moving forward, this assessment will work to delineate the civilian and military markets by way of definition and quantification.

[8] "New Building Construction and Renovation Projects Drive North American Fire Suppression Systems."*Frost & Sullivan*. Frost & Sullivan, 31 Mar 2008. Web.

[9] Ibid

Distribution Statement A: Approved for Public Release; Distribution Unlimited

3.1 Civilian

3.1.1 Civilian Market Definition and Quantification

As noted above, market revenue breakdowns for the civilian versus the military market have thus far been elusive; however, an indirect quantification of each market may work to build an understanding of market potential that may exist for the Fast Flow Nozzle. While it is understood that the Fast Flow Nozzle may be considered a niche technology within the fire suppression systems market, this assessment will work to target those segments within which the nozzle may hold most market relevance.

As briefly noted above, the North American fire suppression systems market is witnessing significant growth due to increased activity in the construction sector. Economic conditions are likely to favor an already upbeat construction market, further driving retrofits such as the high flow system technology. Both new building construction and retrofits of existing buildings have remained buoyant, mostly driven by code compliance, thus positively impacting revenue growth.[10] Recently, the U.S. Census Bureau and U.S. Department of Housing and Urban Development (HUD) issued its report on New Residential Construction for March 2011 showing a 5.7 percent increase in single-family home building permits from the month before, and a 7.7 percent increase in new home starts compared to the month before.[11]

The North American and European markets for fire suppression systems are expected to grow to $1.6 billion dollar through 2014.[12] Also, if the government commits to modernizing the fire safety regulations, both fire detection and fire suppression markets will experience growth in demand, revenues, and competition.[13]

The sectors within this market include water-based suppression systems including sprinkler systems and water-mist systems, gaseous fire suppression systems including carbon dioxide systems, halocarbon (chemical) systems, inert gas systems, and special fire suppression systems

---

[10] "North American Fire Suppression Systems Markets," http://www.marketresearch.com/product/display.asp?productid=1590690&xs=r&SID=42418400-491214309-532681989&curr=USD&kw=&view=abs, Oct. 2007

[11] Norman, D., "New Home Construction Activity Increases in March," /, April 19, 2011.

[12] "Fire Suppression Systems Market to Reach $1.6 Billion by 2014, According to New Report by Global Industry Analysts." *PR Web*. Vocus PRW Holdings, LLC, 17 Feb 2009. Web

[13] "Fire Detection and Suppression Markets in Russia Fired Up by the Progress Made in the Industrial Sector, Frost & Sullivan" http://www.frost.com/prod/servlet/press-release.pag?docid=206356494, July. 2010.

Distribution Statement A: Approved for Public Release; Distribution Unlimited

including foam systems and dry/wet chemical systems.[14] These systems work to mitigate the loss of human and physical capital by suppressing fires and explosions.

The main segments examined in this assessment are:

- Manufacturing
- Nuclear Facilities
- Offshore Oil Production Facilities

3.1.1.1 Manufacturing

The U.S. Chemical Safety Board (CSB) is an independent federal agency that investigates chemical and industrial accidents with the objective of protecting workers, the public, and the environment. CSB investigates industrial disasters associated with chemical and general manufacturing explosions and fires. [15] At present, the CSB has completed a total of 65 investigations and is currently investigating 18 industrial disasters.[16] While the occurrence of these disasters may drive the market demand for systems that work to mitigate the damage caused in the event of such incidences, identifying and quantifying the number of industrial establishments that may experience such events may shed light on a prospective pool of end users for technologies such as the Fast Flow Nozzle. The chart below articulates the types of arms manufacturers in the United States and select data for each North American Industry Classification System code (NAICS). It should be noted that one additional category that may represent a potential end-user for fire suppression technologies may be fireworks manufacturers. The NAICS classifies this group under code 325998, *All Other Miscellaneous Chemical Product and Preparation Manufacturing.*[17] As such, this assessment will not attempt to quantify the fireworks industry based on vague NAICS data, but will rather posit that fireworks manufactures may constitute an end-user, and as such may warrant further exploration. The following chart articulates select NAICS codes and corresponding data: [18]

---

[14] "North American Fire Suppression Systems Markets," http://www.marketresearch.com/product/display.asp?productid=1590690&xs=r&SID=42418400-491214309-532681989&curr=USD&kw=&view=abs, Oct. 2007

[15] "Complete Investigations." *CSB*. U.S. Chemical Safety Board, 2011. Web. <http://www.csb.gov/investigations/investigations.aspx?Type=2&F_All=y>.

[16] Ibid

[17] "NAICS 332992." *U.S. Census Bureau*. U.S. Census Bureau, 03 May 2011. Web.

[18] "American FactFinder." *U.S. Census Bureau*. U.S. Census Bureau, 03 May 2011. Web. 29 Jun 2011.

Distribution Statement A: Approved for Public Release; Distribution Unlimited

Table 8: NAICS 32-33, Explosives and Ammunition 2007 Economic Census[19]				
2007 NAICS code	**Definition**	**Companies**	**Number of establishments**	**Number of employees**
325920	Explosives manufacturing	56	83	6,532
332992	Small arms ammunition manufacturing	102	105	9,427
332993	Ammunition (except small arms) manufacturing	36	44	5,677
332994	Small arms manufacturing	210	222	10,774

Additionally, the NAICS classifications of fabricated metal manufacturing may first be used to quantify the fabricated metal producing subsector of the civilian market. This market sector may be important due to the fact that the fabricated metal industry may be used to forge, stamp, bend, form and assist in the production of machines used to shape individual pieces of metal, such as in welding and assembly. Additionally, metal manufacturers may reveal a pertinent quantification within the fire suppression systems sector for health and safety reasons. Fabricated Metal Manufacturing as defined by the NAICS is the ability to transform metal into intermediate or end products, other than machinery, computers and electronics and metal furniture, or to treat metals and metal formed products fabricated elsewhere. The table relays the U.S. Census Bureau's most recent released count of fabricated metals manufacturing.

Table 9: NAICS 331 Fabricated Metal Manufacturing, 2007 Economic Census[20]				
2007 NAICS code	**Definition**	**Number of establishments**	**Annual payroll ($1,000)**	**Number of employees**
331111	Iron and steel mills	352	7,123,603	106,312
331112	Electrometallurgical ferroalloy product manufacturing	20	113,198	2,144

[19] "2007 Economic Census." *U.S. Census Bureau* 15 apr 2011:. Web.

[20] Ib

Distribution Statement A: Approved for Public Release; Distribution Unlimited

331221	Rolled steel shape manufacturing	150	529,205	10,402
331312	Primary aluminum production	48	524,260	9,167
331315	Aluminum sheet, plate, and foil manufacturing	116	1,024,654	17,540
331316	Aluminum extruded product manufacturing	197	899,515	23,113
331411	Primary smelting and refining of copper	10	100,483	1,732
331419	Primary nonferrous metal, except Cu and Al	182	501,530	8,645
331511	Iron foundries	468	2,458,798	51,309
331512	Steel investment foundries	134	709,742	16,650
331513	Steel foundries (except investment)	222	778,698	17,920
331521	Aluminum die-casting foundries	295	1,193,887	28,101
331522	Nonferrous (except aluminum) die-casting foundries	162	281,841	6,786
331524	Aluminum foundries (except die-casting)	497	866,336	22,116
331525	Copper foundries (except die-casting)	239	266,201	6,953
331528	Other nonferrous foundries (except die-casting)	122	234,688	5,295

Most recent data for the U.S. Census Bureau reveals market quantification of various types of metals' establishments and facilities. A direct quantification of prospective deployment locales within subsectors categorized as foundries may be particularly relevant for a fire suppression

Distribution Statement A: Approved for Public Release; Distribution Unlimited

system. Fabricated metal manufacturers were tabulated above to include: foundries, mills, wire drawling, refining, smelting, extrusion, shaping and rolling manufacturers or producers. Because many of these facilities employ thousands of employees, thousands of civilians at any time could be saved in the event of a industrial disaster with a sufficient fire suppression system.

3.1.1.2 Nuclear Facilities

The United States receives roughly 19.6% of its energy from nuclear power.[21] Because of the potential volatility and consequences associated with attacks to nuclear facilities, it is important to ensure their safety. Physical security at nuclear power plants involves the threat of radiological threats that could directly or indirectly endanger public health and safety through exposure to radiation. In addition to preventing possible exposure of the public to fatal doses of radiation, nuclear site security requirements aim to prevent other acts of terrorism, including cyber attacks.[22] Even though nuclear facilities pose catastrophic consequences in the event of an attack, they are inherently different from other manufacturing facilities that may find use with a technology like the Fast Flow Nozzle. Nuclear facilities are not accessible to the public and entry likely requires very strict security checks and requirements. However, because these sites are potentially very large in size and complexity, with only a small security staff, a risk management and resource deployment system to efficiently organize the security activities may be beneficial.

Nuclear plant security measures are designed to protect three primary areas of vulnerability within three zones:[23]

<u>Zones</u>

- "Owner-controlled" buffer regions
- "Protected areas" – where access is restricted to a portion of plant employees and monitored visitors
- "Vital areas" – further restricted to only some security personnel with additional barriers and access requirements

---

[21] Laura Pierpoint, "Nuclear Power: Carbon-Free Electricity," 1 April 2009, Web, August 2010, <http://www.mitenergyclub.org/assets/2010/4/5/NuclearPower-EClub101-web.pdf>

[22] Nuclear Power Plant Security, Web. 2010. <http://www.nei.org/keyissues/safetyandsecurity/factsheets/powerplantsecurity/>

[23] Mark Holt and Anthony Andrews, "Nuclear Power Plant Security and Vulnerability", Congressional Research Service, 18 March 2009.

Distribution Statement A: Approved for Public Release; Distribution Unlimited

Areas of vulnerability

- Controls on the nuclear chain reaction
- Cooling systems that prevent hot nuclear fuel from melting even after the chain reaction has stopped
- Storage facilities for highly radioactive spent nuclear fuel

A fundamental concept of nuclear plant security lies in the requirements set forth by the Nuclear Regulatory Commission (NRC). This concept, referred to as the design basis threat (DBT) establishes the severity of the potential attacks that a plant's security force must be capable of defending against. All totaled, the DBT considers 12 factors, including such aspects as an assessment of various terrorist threats, sizable explosive devices and modern weapons, attacks by persons with sophisticated knowledge of facility operations and attacks on spent fuel shipments. Note may also be made that of the above areas of vulnerability, the cooling systems that prevent nuclear fuel from melting may be the area for which the Fast Flow Nozzle may have greatest market relevance.

Given that nuclear plants are considerably less complex infrastructure sites due to the single, fixed security force and lack of public entry, it would seem reasonable to assume that security would be relatively trouble-free. However, over the past decade there have been many reports of ill-equipped and prepared security personnel at plants throughout the U.S. According to the Project on Government Oversight's (POGO) investigation into power plant security, only one of four nuclear power plants is confident its plant could defeat a terrorist attack.[24] It was determined that this lack of readiness was primarily due to the private security personnel hired to guard the facilities. According to POGO, the guards claimed that morale was low and that they are, "under-equipped, under-manned, and underpaid." Other reports, such as the video recording released of the inattentive security officers at the Peach Bottom nuclear power plant, confirmed that there had been multiple occasions on which multiple security officers were inattentive.[25] While security measures have been upgraded since the attacks of September 2001 and since these reports were first released, security personnel could potentially benefit from a system that better provided them with risk management and resource allocation techniques, in addition to one that boosts the morale of the officers under its employ.

As noted previously this section, nuclear power plants account for nearly 20% of energy consumption in the U.S. This power is generated at 104 commercial power plants throughout the

[24] Project on Government Oversight, "Nuclear Power Plant Security: Voices from Inside the Fences," 12 September 2002, Web. August 2010, < http://www.pogo.org/pogo-files/reports/nuclear-security-safety/voices-from-inside-the-fences/>

[25] Faddis.

Distribution Statement A: Approved for Public Release; Distribution Unlimited

country (consisting of 69 pressurized and 35 boiling water).[26] Furthermore, as of June 2010, there are also 31 future power plants currently under consideration for construction throughout the United States.[27]

While terror events represent one potential threat to the safety of nuclear threats, natural and man-made disasters may also pose a threat to nuclear facilities. As exemplified by the Fukushima Daiichi Nuclear Power Plant Accident that was a result of both an earthquake and subsequent tsunami, nuclear facilities may be vulnerable to operational breaches due to natural disasters. According to Douglas Fynan, a nuclear engineer at the University of Michigan, "there could be significant benefit to systems which work to supply large quantities of liquid to cool spent rods, in the event of a manmade or natural disaster. While systems are currently in place, the disaster at Fukushima is an example of the need to reexamine currently commercialized systems that work to carry out this function."[28] At present there are 104 commercial nuclear power plants in operation within the United States that may constitute prospective end users for a technology such as the Fast Flow Nozzle that may work to enhance cooling capabilities in the event of an unforeseen event. A listing of the nuclear power plants owned and operated in the U.S. can be found in Appendix A.

3.1.1.3 Oil Production

An additional segment for which the Fast Flow Nozzle may have enhanced relevance is that of oil mining and extraction. Generally speaking, oil production facilities may find use for a technology that works to mitigate risk associated with explosions and fires.

NAICS 32511, Petrochemical Manufacturing may represent an initial industry for which a technology such as the Fast Flow Nozzle may provide enhanced relevance. NAICS 32511 consists of 56 establishments in the U.S. with a total employee base of 9,229.[29]

NAICS two digit *21*, Mining, may be used to quantify the Crude Petroleum and Natural Gas Extraction or Natural Gas Liquid Extraction subsectors of the mining market.[30] This market sector may be important due to the fact that the mining industry may be used to create, develop and establish new uses for existing energies or new energies as a whole. Mining as defined by

---

[26]"9: Nuclear Energy," Annual Energy Review 2008, Energy Information Administration, Web, August 2010, <http://www.eia.doe.gov/emeu/aer/pdf/pages/sec9.pdf>

[27]United States Nuclear Regulatory Commission, "Expected New Nuclear Power Plant Applications," Updated June, 21, 2010, <http://www.nrc.gov/reactors/new-reactors/new-licensing-files/expected-new-rx-applications.pdf>

[28] Phone interview with Douglas Fynan, June 10, 2011. Interview conducted by Jeffrey Stempka

[29] "2007 Economic Census." *U.S. Census Bureau* 15 apr 2011:. Web.

[30] "Sector 21: Mining: Geographic Area Series: Industry Statistics for the State or Offshore Areas: 2007 ." *2007 Economic Census* 18 Dec. 2009: Web.

Distribution Statement A: Approved for Public Release; Distribution Unlimited

the NAICS is the ability to explore, develop and/or produce petroleum or natural gas from wells in which the hydrocarbons will initially flow or can be produced using normal pumping techniques or the production of crude petroleum from surface shales or tar sands or from reservoirs in which the hydrocarbons are semisolids.[31] Additionally there are over 5,920 crude petroleum and natural gas extraction mines within the United States. There are 293 Natural Gas Liquid Extraction establishments within the coastal United States. There are also 30 crude petroleum and natural gas extraction mines off the coasts belonging to the United States. The table below relays the U.S. Census Bureau's most recent released count of Sector 21: Mining throughout the U.S. and U.S. owned mines off shore.

Table 10:Select NAICS Codes

2007 NAICS code	Meaning of 2007 NAICS code	Number of establishments
211111	Crude petroleum and natural gas extraction	**5,920**
211112	Natural gas liquid extraction	**293**

Moving forward, a direct quantification of prospective deployment locales within subsectors categorized as liquid or gas extraction may be particularly relevant as an energy source. Mining industries were tabulated above to include: Crude Petroleum and Natural Gas Extraction on land and off shore as well as Natural Gas Liquid Extraction. Most recent data for the U.S. Census Bureau reveals market quantification for different types of mine extraction, both on and off shore establishments and rigs.

That said, this assessment will briefly examine the offshore oil production industry as a prospective group of end users for the Fast Flow Nozzle. According to the Bureau of Ocean Energy Management, Regulation, and Enforcement (BOEMRE), U.S. offshore production accounted for 27% of all U.S. crude oil production and 11% of all natural gas production in 2009.[32] Additionally, the Gulf of Mexico (GOM) region accounts for roughly 95% of U.S. offshore production. Further, production in deepwater regions –1,000 feet and deeper– in the GOM accounted for 74% of oil and 43% of natural gas production in the U.S. in 2009.[33]

[31] "211111 Crude Petroleum and Natural Gas Extraction." *2007 NAICS Definitions* 2010: Web.

[32] "Deepwater Horizon Oil Spill Disaster: Risk, Recovery, and Insurance Implications."*Congressional Research Service*. Congressional Research Service, 10 Jul 2010. Web.

[33] Ibid

Distribution Statement A: Approved for Public Release; Distribution Unlimited

As exemplified by the Deepwater Horizon Oil Spill Disaster of 2010, explosions and fires are an ever present threat to the safety of both offshore oil personnel *and* for the public at large. According to a Congressional Research Service report to Congress entitled *Deepwater Horizon Oil Spill Disaster: Risk, Recovery, and Insurance Implications*, "the ultra-deepwater, semi-submersible mobile offshore oil rig, *Deepwater Horizon* experienced an explosion and fire and sank in the Gulf of Mexico off the shores of Louisiana."[34] As a result of the disaster, 11 fatalities and a number of injuries occurred. In addition to the loss of human life, an estimated 35,000-60,000 barrels of oil and gas escaped the well-head every day, compromising the ecological quality of nearby ecosystems.[35] Following the explosion, an effort was undertaken to control the ensuing fire that ultimately contributed to the sinking of the structure. The primary tools used in response efforts were mainly Coast Guard vessels employed to fire large amounts of water onto the flames.[36] From April 30, 2010 to August 30, 2010 a total of 58 vessels were deployed in response efforts.[37] While not all of these vessels were fire suppression vessels, it is understood that an effort to extinguish the fire from the sea was undertaken following the explosion and prior to the sinking of the Deepwater Horizon. Within this prospective application, a Fast Flow Nozzle may be integrated into the fire suppression systems on board the oil facilities, or perhaps response vessels. That said, while it is not known to what extent a fire suppression system with a Fast Flow Nozzle could have worked to mitigate damage of this or similar events, this may represent an additional segment for which a technology such as the Fast Flow Nozzle may have enhanced relevance. As such, a brief quantification of the number of offshore oil and gas production facilities may work to build a picture as to potential market size for a technology like the Fast Flow Nozzle that may work to mitigate risk associated with explosions and fires within this context. The graph below articulates the cumulative total of production facilities installed in the Gulf of Mexico over the period from 1959 to 2009.[38] As of 2009, there were a total of 3,560 offshore production facilities in the Gulf of Mexico. While this is a decline from a peak of 4,049 facilities in 2001, this may represent a significant pool of prospective end users for a technology that may enhance safety and response capabilities in the event of a blowout or other type of explosive event. Following this graph, a historical chart outlining the installation of offshore production facilities in both the Gulf of Mexico *and* the Pacific outer continental shelf (OCS) may be found.[39]

---

[34] "Deepwater Horizon Oil Spill Disaster: Risk, Recovery, and Insurance Implications."*Congressional Research Service*. Congressional Research Service, 10 Jul 2010. Web.

[35] Ibid

[36] "Deepwater Horizon Response." *State Emergency Response Team, Florida*. Florida Division of Emergency Management, 02 Mar 2011. Web.

[37] Ibid

[38] "Deepwater Horizon Oil Spill Disaster: Risk, Recovery, and Insurance Implications."*Congressional Research Service*. Congressional Research Service, 10 Jul 2010. Web.

[39] Ibid

Distribution Statement A: Approved for Public Release; Distribution Unlimited

Figure 8: Gulf of Mexico Offshore Production Facilities 1959-2009

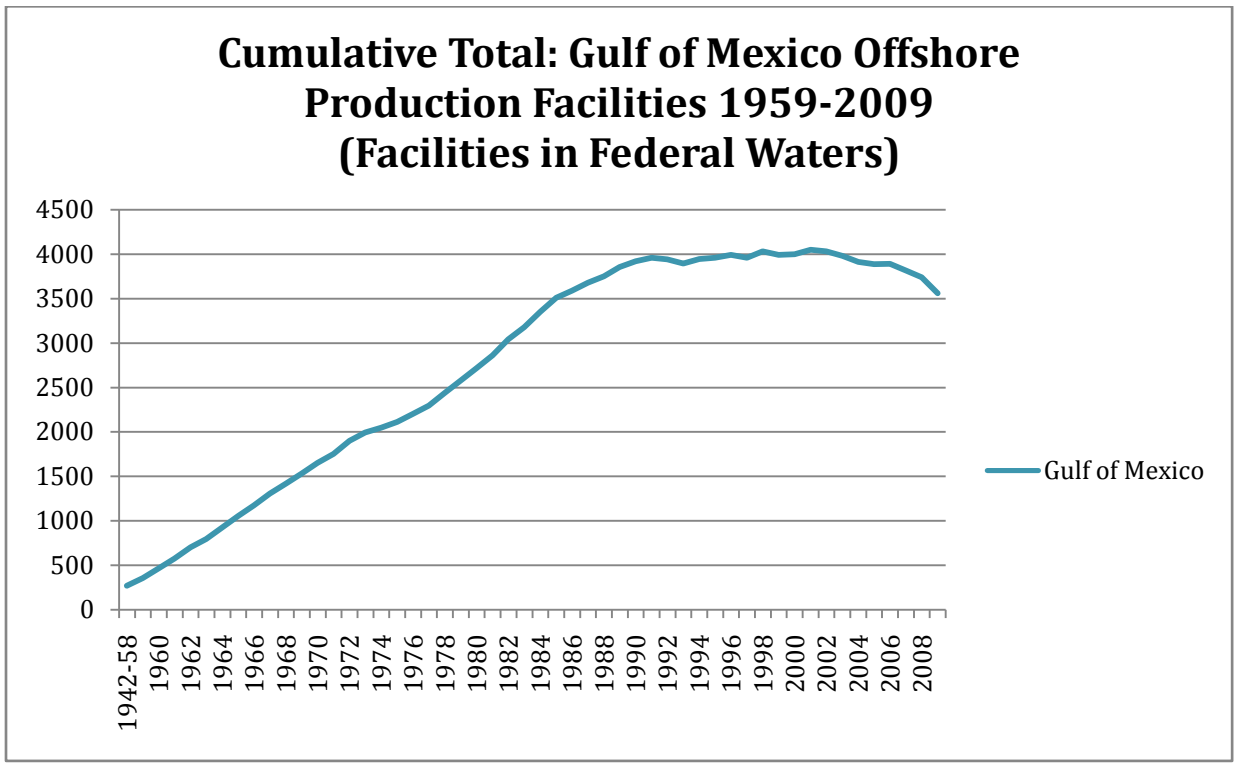

Distribution Statement A: Approved for Public Release; Distribution Unlimited

Table 11Installations, Removals, and Cumulative Totals of Offshore Production Facilities in Federal Waters: 1959-2010

(There have not been any production facilities installed on the Atlantic or Alaska OCS)

	Gulf of Mexico OCS					Pacific OCS				
Year	Installations	Removals	Net Change	Cumulative		Installations	Removals	Net Change	Cumulative	Cumulative Total
1942-58	269	0	269	269		0	0	0	0	**269**
1959	85	0	85	354		0	0	0	0	**354**
1960	111	0	111	465		0	0	0	0	**465**
1961	109	0	109	574		0	0	0	0	**574**
1962	128	0	128	702		0	0	0	0	**702**
1963	91	0	91	793		0	0	0	0	**793**
1964	131	0	131	924		0	0	0	0	**924**
1965	130	0	130	1054		0	0	0	0	**1054**
1966	119	0	119	1173		0	0	0	0	**1173**
1967	134	0	134	1307		1	0	1	1	**1308**
1968	112	0	112	1419		3	0	3	4	**1423**
1969	113	0	113	1532		1	0	1	5	**1537**
1970	119	0	119	1651		0	0	0	5	**1656**
1971	103	0	103	1754		0	0	0	5	**1759**
1972	144	0	144	1898		0	0	0	5	**1903**
1973	96	1	95	1993		0	0	0	5	**1998**
1974	59	5	54	2047		0	0	0	5	**2052**
1975	102	36	66	2113		0	0	0	5	**2118**
1976	117	29	88	2201		1	0	1	6	**2207**
1977	112	17	95	2296		1	0	1	7	**2303**
1978	168	26	142	2438		0	0	0	7	**2445**
1979	175	35	140	2578		2	0	2	9	**2587**
1980	174	36	138	2716		3	0	3	12	**2728**
1981	169	24	145	2861		3	0	3	15	**2876**

Distribution Statement A: Approved for Public Release; Distribution Unlimited

1982	195	15	180	3041		0	0	0	15	**3056**
1983	173	38	135	3176		1	0	1	16	**3192**
1984	227	53	174	3350		1	0	1	17	**3367**
1985	215	55	160	3510		3	0	3	20	**3530**
1986	111	34	77	3587		1	0	1	21	**3608**
1987	116	23	93	3680		1	0	1	22	**3702**
1988	170	100	70	3750		0	0	0	22	**3772**
1989	197	94	103	3853		2	0	2	24	**3877**
1990	174	108	66	3919		0	0	0	24	**3943**
1991	156	117	39	3958		0	0	0	24	**3982**
1992	89	105	-16	3942		0	0	0	24	**3966**
1993	123	172	-49	3893		0	0	0	24	**3917**
1994	176	125	51	3944		0	1	-1	23	**3967**
1995	132	118	14	3958		0	0	0	23	**3981**
1996	153	120	33	3991		0	0	0	23	**4014**
1997	147	178	-31	3960		0	0	0	23	**3983**
1998	148	76	72	4032		0	0	0	23	**4055**
1999	106	145	-39	3993		0	0	0	23	**4016**
2000	146	142	4	3997		0	0	0	23	**4020**
2001	161	109	52	4049		0	0	0	23	**4072**
2002	102	121	-19	4030		0	0	0	23	**4053**
2003	121	169	-48	3982		0	0	0	23	**4005**
2004	124	194	-70	3912		0	0	0	23	**3935**
2005	100	124	-24	3888		0	0	0	23	**3911**
2006	111	108	3	3891		0	0	0	23	**3914**
2007	82	157	-75	3816		0	0	0	23	**3839**
2008	72	150	-78	3738		0	0	0	23	**3761**
2009	28	206	-178	3560		0	0	0	23	**3583**
Totals	***6925***	***3365***	***3560***	***3560***		***24***	***1***	***23***	***23***	***3583***

Distribution Statement A: Approved for Public Release; Distribution Unlimited

As explosion events and fires may be a serious threat to the safety of oil production facility personnel in addition to working to undermine the stability of the production structure, technologies that work to mitigate the risk associated with such events may be attractive to companies that build, own and operate these facilities. Again, while an analysis the functional integration of a technology such as the Fast Flow Nozzle into the operational aspects of offshore oil production facilities is beyond the scope of this assessment, it has been identified that high temperature explosions may be a serious consideration in these environments. As such, the Fast Flow Nozzle may represent one technology that may work to control explosions and fires in oil production facilities.

3.1.2 Civilian Market Drivers and Influences

Market drivers and influences for the civilian manufacturing and energy market may include the following:

- Increased activity in the building and construction markets and modernization of fire safety regulations
- Industrial disasters
- Natural Disasters

3.1.2.1 Increased activity in the building and construction markets and modernization of fire safety regulations

With the increased activity in the building and construction markets, there is expected to be increased activity in the fire protection/suppression markets. As new structures are built, additional equipment will be necessary for fire protection/suppression. As mentioned above, the U.S. Census Bureau and U.S. Department of Housing and Urban Development (HUD) issued their report on New Residential Construction for March 2011 showing a 5.7 percent increase in single-family home building permits from the month before, and a 7.7 percent increase in new home starts compared to the month before.[40]

Minimum fire safety standards are established, although many municipalities choose to adopt more stringent standards arising from historic, geographic, or other conditions, if the alternative requirements result in a level of protection to life, safety, or property at a level equal to or greater than the minimum fire safety standards or requirements.[41]

---

[40] Norman, D., "New Home Construction Activity Increases in March," http://www.realestateindustrynews.com/real-estate-market/new-home-construction-activity-increases-in-march/, April 19, 2011.

[41] Minimum Fire Safety Standards, < http://law.onecle.com/florida/insurance/633.025.html>, March 26, 2010.

Distribution Statement A: Approved for Public Release; Distribution Unlimited

3.1.2.2 Industrial Disasters

Moving forward, it is understood that industrial disasters involving fire and explosions may constitute events for which a technology like the Fast Flow Nozzle may find enhanced relevance. As such, this assessment will briefly explore data regarding workplace fatalities associated with fires and explosions as a potential market driver. The number of industrial mishaps within the United States is not directly articulated by governing bodies. However, in addition to the disasters outlined in the market section above by the CSB, the Bureau of Alcohol Tobacco and Firearms (ATF) quotes the following statistics with regard to explosive incidents in the United States.[42]

Table 12: Industrial Disasters with Explosive Incidents

Year	Number of Incidents	Number of Injuries	Number of Fatalities
2006	3445 explosives incidents	135 injuries	14 fatalities
2005	3722 explosives incidents	148 injuries	18 fatalities
2004	3790 explosives incidents	263 injuries	36 fatalities

Despite the above ATF quantification, the causes and ramifications of these explosive incidents are not disclosed. If the established assumptions are maintained, it can be said that each explosive incident (classified as a disaster) may represent a situation in which the Fast Flow Nozzle may work to mitigate disaster risk to physical and human resources. In this case, the occurrence of explosive incidents reveals potential market opportunity for the Fast Flow Nozzle.

Moving forward, according to the most recent National Census of Fatal Occupation Injuries, conducted by the United States Bureau of Labor Statistics (BLS), a total of 5,214 fatal workplace injuries were recorded in the United States in 2008.[43] These fatal occupation injuries include: transportation incidents, assaults and violent acts (includes homicides), contact with objects and equipment, falls, exposure to harmful substances or environments, and fires and explosions. Most relevant to an examination of potential end-user value of the Fast Flow Nozzle is a subset

[42]Bureau of Alcohol Tobacco and Firearms. "ATF Fact Sheet." *U.S. Bomb Data Center*. 2008. ATF Public Affairs Division, Web. Mar 2010. <http://www.atf.gov/publications/factsheets/factsheet-us-bomb-data-center.html>.

[43] Bureau of Labor Statistics, United States Department of Labor. "Number of Fatal Work Injuries." U.S. Bureau of Labor Statistics, 2010. Web. May 2010. < http://www.bls.gov/iif/oshwc/cfoi/cfch0007.pdf>.

Distribution Statement A: Approved for Public Release; Distribution Unlimited

of data examining fires and explosions in the work place. This data is grouped with transportation incidents resulting in worker fatality.

Transportation incidents (highway, non-highway, and pedestrians struck) constituted 2,130 of the 5,214 fatal work injuries in 2008. There were 794 assaults and violent acts in the workplace in 2008: 511 shootings, 32 stabbings, and 251 self-inflicted injuries.[44] Increasingly relevant to the Fast Flow Nozzle, there were 156 workplace deaths attributed to fires and explosions in 2008.[45] If the established potential relationship between ballistic threat and end-user value of the Fast Flow Nozzle's fire and explosion mitigation capabilities are maintained, these 156 workplace deaths due to fires and explosions may serve as a market indicator. The chart below depicts the number of fatal work injuries by type.[46]

Figure 9: Percent Distribution, Manner in which Fatal Work Injuries Occurred: 2008[47]

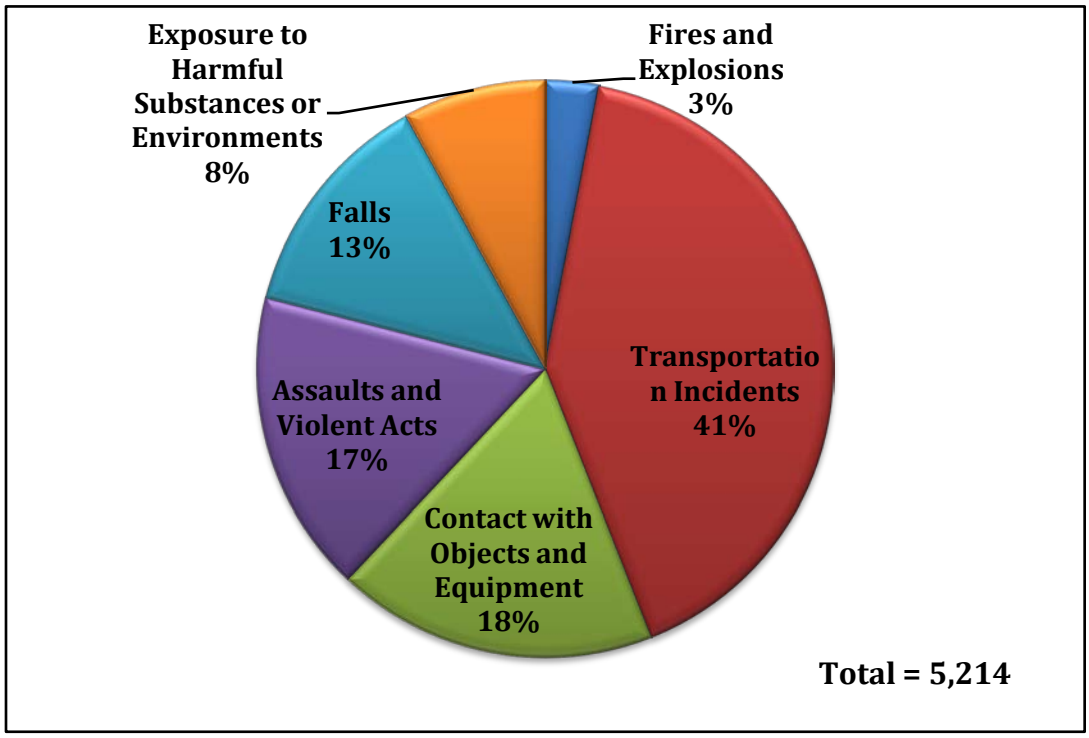

[44]Bureau of Labor Statistics, United States Department of Labor. "NATIONAL CENSUS OF FATAL OCCUPATIONAL INJURIES IN 2008." www.bls.gov/news.release. United States Department of Labor, 20 Aug 2009. Web. May 2010. <http://www.bls.gov/news.release/pdf/cfoi.pdf>

[45] Bureau of Labor Statistics, United States Department of Labor. "Fatal occupational injuries resulting from transportation incidents and homicides by occupation, All United States, 2008." U.S. Bureau of Labor Statistics, 2010. Web. May 2010. <http://www.bls.gov/iif/oshwc/cfoi/cftb0237.pdf>.

[46] Bureau of Labor Statistics, United States Department of Labor. "Number of Fatal Work Injuries." U.S. Bureau of Labor Statistics, 2010. Web. May 2010. < http://www.bls.gov/iif/oshwc/cfoi/cfch0007.pdf>.

[47] Ibid.

Distribution Statement A: Approved for Public Release; Distribution Unlimited

According to BLS statistics, the number of deaths between 2007 and 2008 and resulted from fires and explosions increased by approximately 22 deaths.[48] This was one of two categories that experienced increases in the period examined, with the other being *Contact with Objects and Equipment*, which experienced an increase in 17 deaths over the period examined.

Additionally, it may be noted that in situations where there were multiple deaths, fires and explosions accounted for approximately 9% of the incidents.[49]

Figure 10: Percent Distribution, Manner in which Fatal Work Injuries Occurred in Multiple-Fatality Incidents: 2008[50]

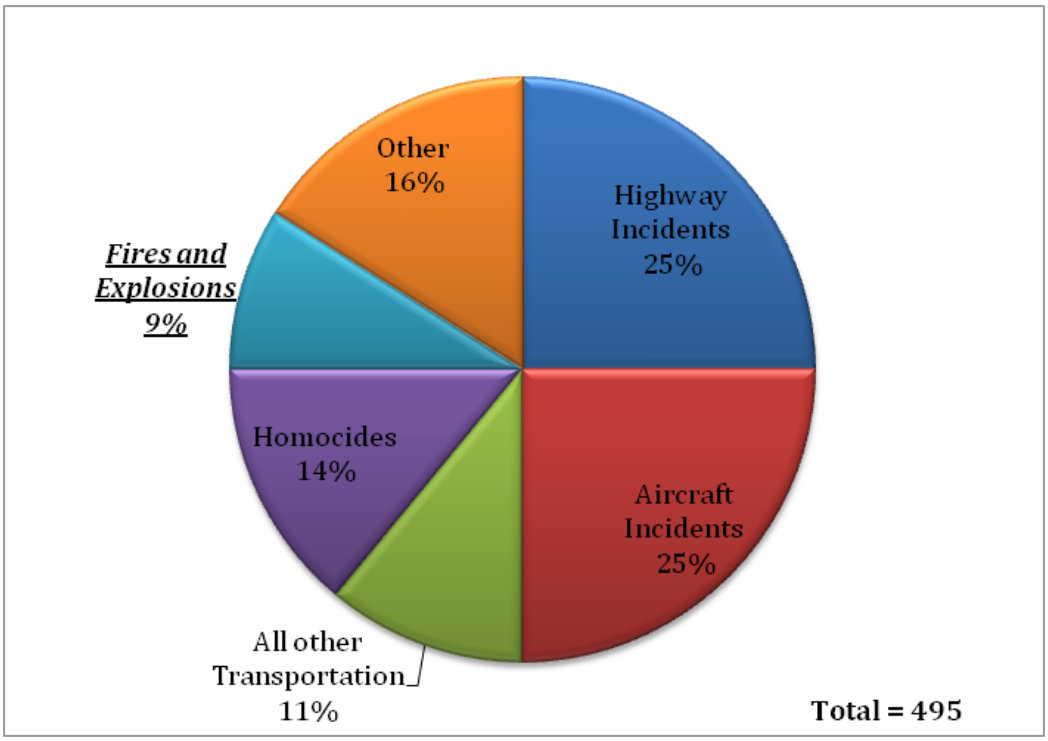

Overall, the BLS reports that 90 percent of 2008's fatal work injuries involved workers in a private industry. 3,639 of the 5,214 fatalities were private sector wage and salary workers. 544 (approximately ten percent) of the fatalities were classed by the BLS to be government workers, and 1,031 to be self-employed workers. As with the ATF data discussed above, the causes and

[48] "Number of Fatal Work Injuries, 1992-2008." *Bureau of Labor Statistics*. Bureau of Labor Statistics, 2009. Web. < http://www.bls.gov/iif/oshwc/cfoi/cfch0007.pdf>

[49] Ibid

[50] Ibid

Distribution Statement A: Approved for Public Release; Distribution Unlimited

ramifications of these explosive incidents are not disclosed. Understanding that an explosion may represent a situation for which a fire suppression system may be warranted, this data may be construed to support demand for suppression systems that work to mitigate human and physical assets in such an event.

As identified above, the U.S. Chemical Safety Board (CSB) is an independent federal agency that investigates chemical and industrial accidents with the objective of protecting workers, the public, and the environment. CSB investigates industrial disasters associated with chemical and general manufacturing explosions and fires. [51] While a full list of ongoing and completed investigations may be found on the CSB's website, examining the types of incidents that they investigate may shed light on areas for which a need for fire suppression systems may exist. The following chart details several investigations completed by the CSB:[52]

[51] "Complete Investigations." *CSB*. U.S. Chemical Safety Board, 2011. Web. <http://www.csb.gov/investigations/investigations.aspx?Type=2&F_All=y>.

[52] Ibid

Distribution Statement A: Approved for Public Release; Distribution Unlimited

Table 13: CSB Completed Investigations				
Event	Location	Date	Accident Type (If provided)	Details
Goodyear Heat Exchange Rupture	Houston, TX	11-Jun-08		On June 11, 2008, one worker was killed and approximately seven others were injured, during a maintenance operation on a heat exchanger. Ammonia overpressured inside the exchanger, causing it to rupture.
Bayer CropScience Pesticide Waste Tank Explosion	Institute, WV	28-Aug-08	Chemical Manufacturing - Fire and Explosion	Two workers were fatally injured when a waste tank containing the pesticide methomyl violently exploded, damaging a process unit at the Bayer CropScience chemical plant in Institute, West Virginia.
Xcel Energy Company Hydroelectric Tunnel Fire	Georgetown, CO	2-Oct-07	Confided Space/ Asphyxiation	On October 2, 2007, five people were killed and three others injured when a fire erupted 1,000 feet underground in a tunnel at Xcel Energy Company's hydroelectric power plant in Georgetown, Colorado, located approximately 45 miles west of Denver. The fatally injured workers were trapped deep underground during an operation to coat the inside of the tunnel with epoxy using highly flammable solvents. The tunnel is several thousand feet long and connects two reservoirs with electricity-generating turbines.

Distribution Statement A: Approved for Public Release; Distribution Unlimited

Veolia Environmental Services Flammable Vapor Explosion and Fire	West Carrollton, OH	4-May-09		On May 4, 2009, flammable vapors were suddenly released into the atmosphere. The vapors found an ignition source, leading to an explosion and fire that seriously injured two workers and damaged twenty residences.
ConAgra Natural Gas Explosion and Ammonia Release	Garner, NC	9-Jun-09	Flammable Vapor	On the afternoon of June 9, 2009, 4 workers were fatally injured and dozens of others were injured when an explosion occurred at the ConAgra Foods facility in Garner, North Carolina.
Kleen Energy Natural Gas Explosion	Middletown, CT	7-Feb-10	Flammable Vapor	Six workers were fatally injured during a planned work activity to clean debris from natural gas pipes at Kleen Energy in Middletown, CT. To remove the debris, workers used natural gas at a high pressure of approximately 650 pounds per square inch. The high velocity of the natural gas flow was intended to remove any debris in the new piping. During this process, the natural gas found an ignition source and exploded.
T2 Laboratories Inc. Reactive Chemical Explosion	Jacksonville, FL	19-Dec-07	Reactive Incident	On December 19, 2007, four people were killed and 13 others were transported to the hospital when an explosion occured at T2 Laboratories Inc. during the production of a gasoline additive called methylcyclopentadienyl manganese tricarbonyl.

Distribution Statement A: Approved for Public Release; Distribution Unlimited

Imperial Sugar Company Dust Explosion and Fire	Port Wentworth, GA	7-Feb-08	Combustible Dust Explosion and Fire	On February 7, 2008, a huge explosion and fire occurred at the Imperial Sugar refinery northwest of Savannah, Georgia, causing 14 deaths and injuring 38 others, including 14 with serious and life-threatening burns. The explosion was fueled by massive accumulations of combustible sugar dust throughout the packaging building.

Distribution Statement A: Approved for Public Release; Distribution Unlimited

3.1.2.3 NATURAL DISASATERS

Ultimately, public information regarding disasters beyond those which are "natural" is relatively limited. Thus, with regard to market influence and drivers, this assessment now focuses on those potentially driving the occurrence of natural disasters.

As noted, natural disaster incidents may necessitate enhanced disaster response systems to be integrated into critical facilities such as nuclear power plants that may pose a significant threat if safety or security measures were to be compromised. As such, a brief evaluation of natural disasters, their geographic distribution, and where critical infrastructure (in this case nuclear facilities) exist within the United States may work to understand the way in which these events may drive the need for systems such as the Fast Flow Nozzle that may be employed to direct large quantities of liquid to critical areas in the event of a natural or manmade disaster.

In general, the United States is one of the top ranking countries with regard to the occurrence of natural disasters. This is in accordance with data and definitions provided by the Center for Research on the Epidemiology of Disasters (CRED). The CRED articulates the following classifications of natural disasters.

Table 14: Disaster Definitions

Disaster Subgroup	Definition	Disaster Main Type
Geophysical	Events originating from solid earth	Earthquake, Volcano, Mass Movement (dry)
Meteorological	Events caused by short-lived/small to meso scale atmospheric processes (in the spectrum from minutes to days)	Storm
Hydrological	Events caused by deviations in the normal water cycle and/or overflow of bodies of water caused by wind set-up	Flood, Mass Movement (wet)
Climatological	Events caused by long-lived/meso to macro scale processes (in the spectrum from intra-seasonal to multi-decadal climate variability)	Extreme Temperature, Drought, Wildfire
Biological	Disaster caused by the exposure of living organisms to germs and toxic substances	Epidemic, Insect Infestation, Animal Stampede

Based on the definitions above, it is the occurrence of the CRED's defined meteorological, geophysical, hydrological, and climatological disasters which may prompt end-user value of severe-weather protection. Including all of the above classifications of natural disasters, the United States ranked as the second most affected country with 22 natural disaster events in 2008.

Distribution Statement A: Approved for Public Release; Distribution Unlimited

China was ranked as number one with 29 natural disasters. The CRED reports the following figures in ranking the top ten countries by the number of disasters reported in 2008. Maintaining focus on potential domestic market opportunity, it is worthy to note that the United States has occupied a top ranking for disaster occurrence from 2005-2008. Moreover, meteorological disasters (*i.e.* storms) were the top ranking type of natural disaster within the United States.

Figure 11: Disaster Events, 2008

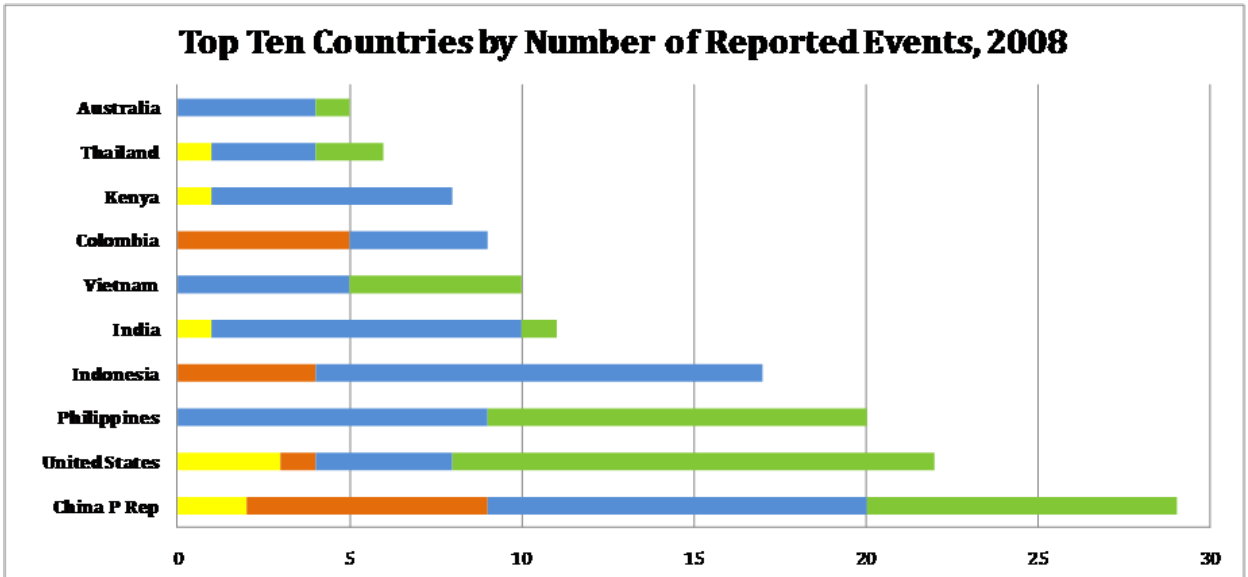

	China P Rep	United States	Philippines	Indonesia	India	Vietnam	Colombia	Kenya	Thailand	Australia
Climatological	2	3	0	0	1	0	0	1	1	0
Geophysical	7	1	0	4	0	0	5	0	0	0
Hydrological	11	4	9	13	9	5	4	7	3	4
Meteorological	9	14	11	0	1	5	0	0	2	1

As noted, the most frequently occurring natural disaster in 2008 within the United States were those classified as meteorological. The CRED provides the following breakdown of natural disaster occurrence by region—the Americas including the United States.

Distribution Statement A: Approved for Public Release; Distribution Unlimited

Table 15: Natural Disasters by Type						
No. of Natural Disasters	**Africa**	**Americas**	**Asia**	**Europe**	**Oceania**	**Global**
Climatological 2008	10	4	9	9	0	32
Avg. 2000-07	9	14	13	19	2	57
Geophysical 2008	3	8	18	2	1	32
Avg. 2000-07	3	7	22	3	2	37
Hydrological 2008	48	39	73	9	9	178
Avg. 2000-07	42	39	82	28	5	196
Meteorological 2008	10	44	43	13	2	112
Avg. 2000-07	9	34	42	15	7	107
Total 2008	**71**	**95**	**143**	**33**	**12**	**354**
Avg. 2000-07	**63**	**94**	**160**	**65**	**16**	**397**

The above statistics reveal that the United States and Asia are by far the top ranking regions with regard to meteorological natural disasters.

While this assessment will not go into great detail with regard to each type of natural disaster, in order to understand the impact that natural disasters may have on existing nuclear facilities, and therefore on driving demand for technologies that may be employed to mitigate losses following these natural disasters, meteorological events will be evaluated.

The National Weather Service (NWS) offers further insight into the occurrence of meteorological natural disasters within the United States. The Service provides the following breakdown of natural disaster statistics resulting in fatality, injury, property damage, or crop damage for 2009. As established, the occurrence of severe-weather hazards that may damage critical infrastructure, such as nuclear facilities, may be of particular importance to the Fast Flow Nozzle. As noted, the Fast Flow Nozzle may offer an additional level of protection against situations where nuclear core cooling is compromised such as in the event of power loss. Therefore, of particular relevance, and in line with CRED definition, is the creation of hazards in relation to the occurrence of *convection events*, *tropical cyclones* and *high winds* outlined below.

Distribution Statement A: Approved for Public Release; Distribution Unlimited

Table 16: Summary Natural Hazard Statistics for 2009 in the United States					
Weather Event	**Fatalities**	**Injuries**	**Property Damage (million $USD)**	**Crop Damage (million $USD)**	**Total Damage (million $USD)**
Convection					
Lightning	34	201	43.83	0.01	43.84
Tornado	21	351	566.97	18.48	584.85
Thunderstorm Wind	22	189	1,397.50	32.57	1,430.07
Hail	0	69	1,287.79	349.67	1,6728.46
Extreme Temperatures					
Cold	33	4	0.09	189.05	189.14
Heat	45	204	4.06	0.00	4.06
Flood					
Flash Flood	32	17	438.50	9.05	447.55
River Flood	21	9	607.57	29.23	636.80
Marine					
Coastal Storm	0	0	281.69	0.00	281.69
Tsunami	32	129	81.00	0.02	81.02
Rip Current	54	53	25.86	0.00	25.86
Tropical Cyclones					
Tropical Storm/Hurricane	2	1	0.92	0.01	0.93
Winter					
Winter Storm	21	394	339.56	0.50	340.06
Ice	7	5	1,170.96	0.00	1,170.96
Avalanche	7	3	1.00	0.00	1.00
Other					
Drought	0	0	0.5	49.58	49.63
Dust Storm	2	3	0.90	5.75	6.64
Rain	6	9	5.89	0.16	6.05
Fog	0	0	2.76	0.00	2.76
High Wind	25	68	198.23	0.03	198.26
Waterspout	0	0	0.01	0.00	0.01
Fire Weather	2	109	110.82	1.38	112.20
Mud Slide	0	9	51.91	0.00	51.91
Volcanic Ash	0	0	0.00	0.00	0.00
Miscellaneous	0	0	0.06	0.00	0.06
Total	**366**	**1827**	**6,608.30**	**685.49**	**7,293.79**

While it is understood that a direct hit to a nuclear facility may not damage the core reactors, necessitating emergency cooling, an important issue may be the ability to cool the reactor in the event of power loss. Facilities typically have a number of safety measures set in place to

Distribution Statement A: Approved for Public Release; Distribution Unlimited

function properly if a sustained loss of power occurs; however, a technology such as the Fast Flow Nozzle could potentially be integrated into the system enabling a high volume of water to be pumped on site in the event of a major unforeseen catastrophe that exhausts existing precautions.[53]

Figure 12: Wind Zones in the United States

Further specifying the potential market relevance for additional water delivery, the United States Federal Emergency Management Agency (FEMA) divides the United States into four zones that geographically reflect the number and magnitude of extreme wind storms. Those geographic locations for which one or both of these variables increase may serve to exist as markets in which the Fast Flow Nozzle may increase in relevance. The map below depicts FEMA's wind zone designations. As the map is recreated from third party source, specific quantification is not

[53] "Good Question: What if a Tornado Hit a Nuclear Power Plant." *CBS Minnesota*. CBS, 14 Mar 2011. Web.

Distribution Statement A: Approved for Public Release; Distribution Unlimited

provided and the image should only be interpreted as a general overview of geographic influence on prospective severe-weather market relevance. [54]

Regions designated to be in Zone IV (red) have experienced the highest number of, and strongest, severe wind events (*i.e.* tornadoes). Zone III (orange) locations have experienced significant severe weather activity and include coastal areas that are susceptible to hurricanes.

In addition to the above geographic wind zones, FEMA also provides a comparison of the number of recorded tornados per 2,470 square miles within the United States and its territories. This comparison, depicted in the map below, may offer further insight into geographic markets which may have an increased value for the Fast Flow Nozzle as a water deluge system.[55] This insight maintains the assumption that increased exposure to severe weather threats may prompt increased value of post catastrophic event risk mitigation. Again recreated from a third-party source, specific quantification is not provided and the image should only be interpreted as a general overview of geographic influence on prospective severe-weather (tornado) market relevance.[56]

[54] United States Federal Emergency Management Agency, Department of Homeland Security. "Taking Shelter from the Storm." *Building a Safe Room For Your Home or Small Business*. 3rd ed. FEMA, 2008. Print.

[55] United States Federal Emergency Management Agency, Department of Homeland Security. "Taking Shelter from the Storm." *Building a Safe Room For Your Home or Small Business*. 3rd ed. FEMA, 2008. Print.

[56] Ibid.

Distribution Statement A: Approved for Public Release; Distribution Unlimited

Figure 13: Tornado Activity

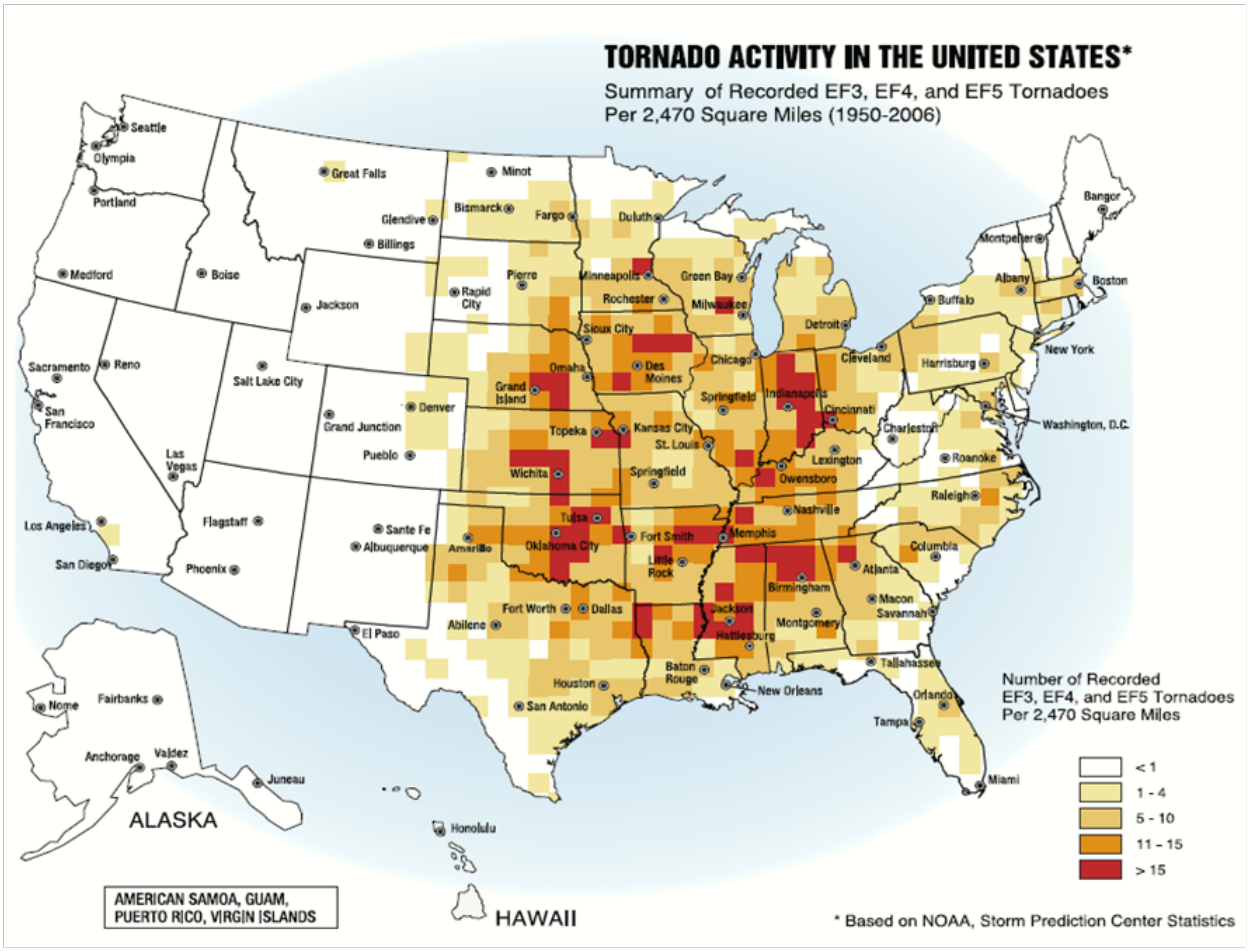

The noted EF3, EF4 and EF5 specification relates to the Enhanced Fujita Scale (EF Scale)—that used by the National Oceanic and Atmospheric Administration (NOAA) to rank and indicate damage experienced by a building during a tornado. Those depicted above are EF3-EF5 tornadoes, the top three on a scale of zero to five. Maintaining the assumption that with enhanced severe weather threat comes increased value of protective measures, those inhabitants with higher occurrence of tornadoes, especially those with higher ranked magnitudes, may have increased value for the Fast Flow Nozzle. Market relevance for a suppression system for critical infrastructure may increase within these geographic regions for which greater occurrences of natural disasters exist.

The following map is a representation of the geographic distribution of active nuclear facilities in the United States:[57]

[57] "Operating Nuclear Power Reactors." *U.S.N.R.*. United States Nuclear Regulatory Commission, 2011. Web.

Distribution Statement A: Approved for Public Release; Distribution Unlimited

Figure 14: Nuclear Facilities in the United States

Note may be made that a large number of nuclear facilities are in regions for high occurrences of natural weather disasters. While this does not necessarily correspond to a need for a device such as the Fast Flow Nozzle, it is understood that in the event of a catastrophic event, reactor safety may potentially be compromised, warranting the need to devices which would work to mitigate risk associated with such events by providing high volume water delivery in a speedy manner.

In addition, drought and wildfire may work to drive demand for a technology like the Fast Flow Nozzle. As noted above, the Fast Flow Nozzle may be employed in areas where high value assets exist in order to create a buffer or protect the assets from various threats including explosions and fires. Wildfires may pose a serious threat to physical assets, and as such may constitute a driving force in the demand for such technologies.

The National Oceanic and Atmospheric Administration National Climatic Data Center maintains historical data on the number and severity of wildfires in the United States. The following chart

Distribution Statement A: Approved for Public Release; Distribution Unlimited

articulates the number of wildfires and resulting acres burned over the period from June 2, 2000 to June 2, 2011:[58]

Table 17: 2011 Wildfire Statistics			
(Source: NIFC)			
Year–To–Date Totals as of June 2nd	**Nationwide Number of Fires**	**Nationwide Number of Acres Burned**	**Nationwide Number of Acres Burned Per Fire**
6/2/2011	**29,857**	**3,450,882**	116
6/2/2010	25,784	674,222	26
6/2/2009	41,785	1,410,776	34
6/2/2008	27,120	1,501,036	55
6/2/2007	36,714	1,334,672	36
6/2/2006	41,845	2,556,162	61
6/2/2005	25,058	374,405	15
6/2/2004	32,068	531,270	17
6/2/2003	21,542	405,937	19
6/2/2002	30,817	1,115,133	36
6/2/2001	33,876	726,576	21
6/2/2000	39,865	1,027,072	26
5–yr average (2006 – 2010)	34,650	1,495,374	
10–yr average (2001 – 2010)	31,661	1,063,019	

While it may be noted that the number of fires has generally been trending down over the period examined, it appears that the overall number of acres burned and hence the number of acres burned per fire has dramatically increased with a dramatic spike in 2011.[59]

[58] "State of the Climate Wildfires May 2011." *NOAA*. National Oceanic and Atmospheric Administration, May 2011. Web.

[59] Ibid

Distribution Statement A: Approved for Public Release; Distribution Unlimited

Figure 15: Fires and Acres Burned 2000-2011

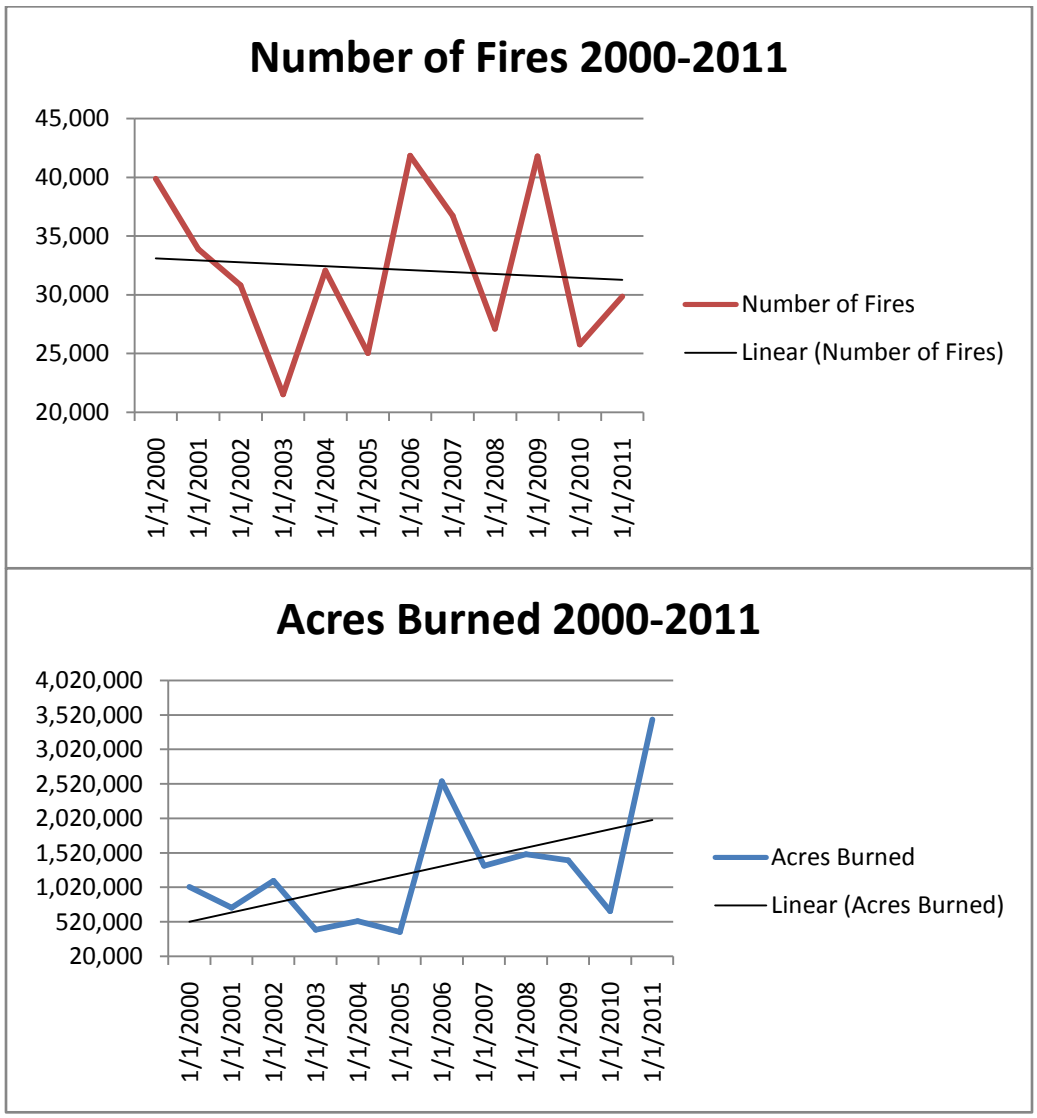

Understanding that there may be a need for a technology that delivers a high volume of water very quickly in situations where natural disasters such as a wildfire threaten high value assets or critical areas, the Fast Flow Nozzle may offer enhanced capabilities with respect to protecting said assets and mitigating risk associated with a wild fire. That said, the maps below represent the U.S. drought monitor and observed fire danger class as of May 31 and June 01, 2011, respectively.[60] While these maps represent a snapshot of the U.S., it is understood that the areas defined as drought areas and high danger fire zones are commonly defined as such on a year by year basis. As such, they may represent geographic areas for which a technology such as the Fast Flow Nozzle may find enhanced market relevance when approaching the market from the standpoint of asset protection against natural fires.

[60] Ibid

Distribution Statement A: Approved for Public Release; Distribution Unlimited

Figure 16: US Drought Monitor, May 31, 2011

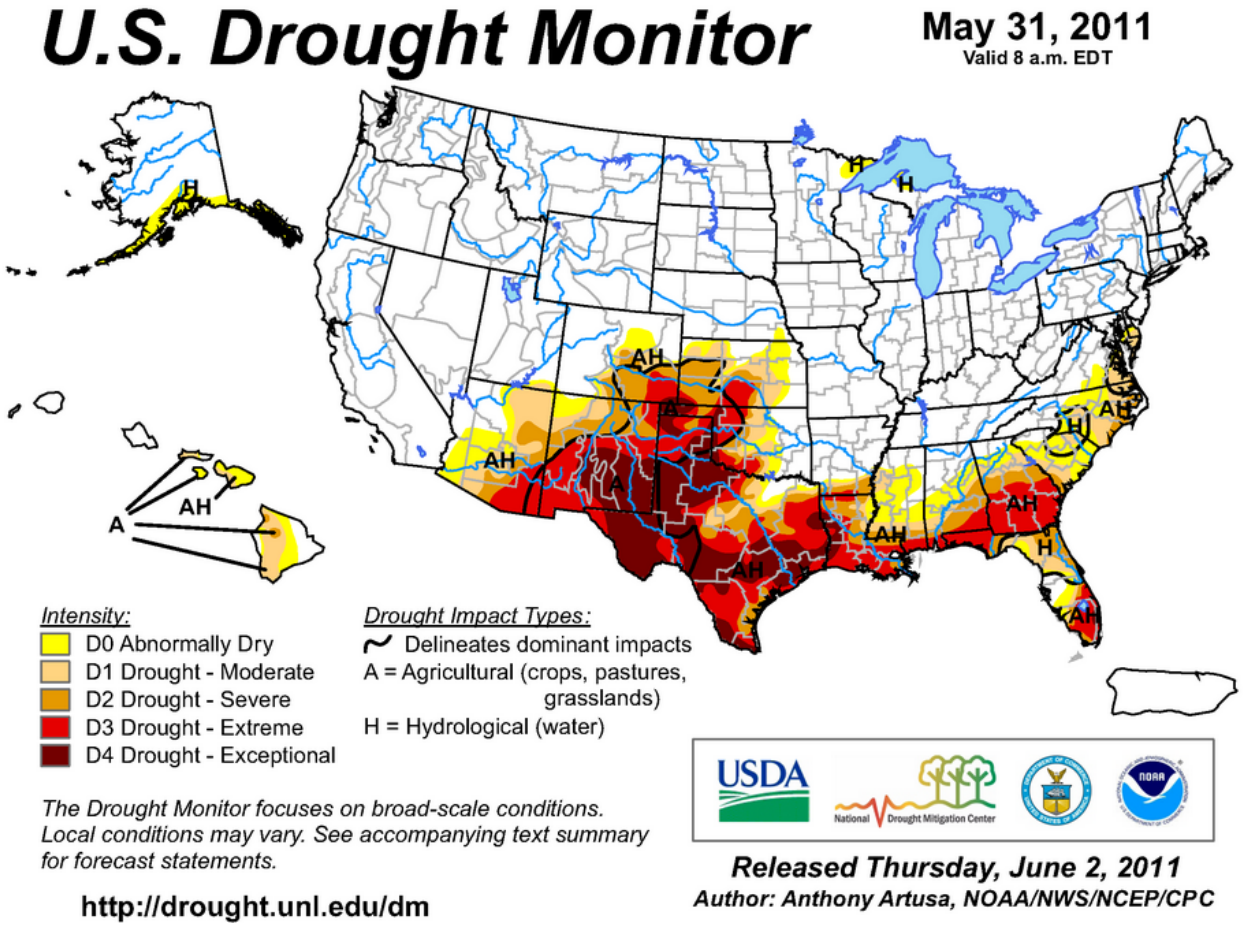

Distribution Statement A: Approved for Public Release; Distribution Unlimited

Figure 17: Observed Fire Danger Class, U.S. June, 2011

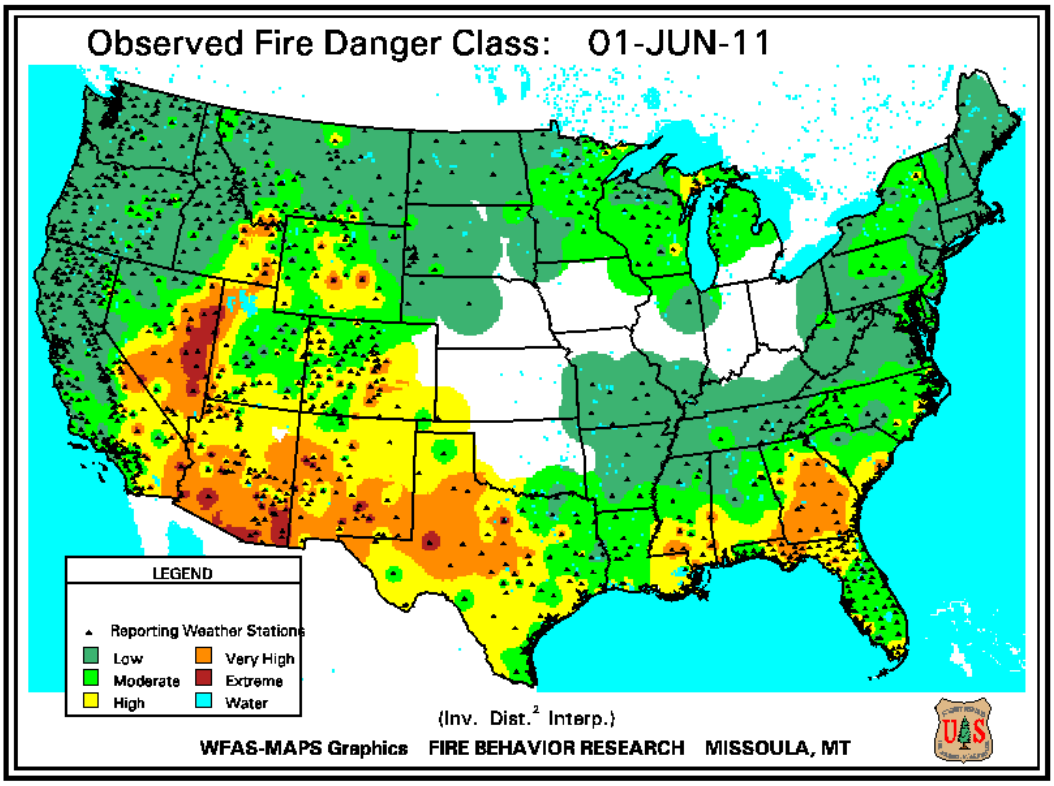

In reviewing the data considered, it appears that there may be a market for the Fast Flow Nozzle in the civilian segment beyond that of initially considered applications. All else constant, ultimate market success will be based on the nozzle's ability to be integrated into existing systems to meet the needs of end users for specific applications.

Moving forward, this assessment will examine the potential military market for the Fast Flow Nozzle.

3.2 Military Market

3.2.1 Military Market Definition and Quantification

The military high-speed, high-temperature fire protection/suppression market includes those military applications for this equipment including on military installations and as part of military conflicts anywhere in the world. These applications include use of fire protection/suppression equipment as part of training exercises, such as putting-out training fires, and in actual fire emergencies.

Distribution Statement A: Approved for Public Release; Distribution Unlimited

3.2.1.1 Military Sites

The locations of military service and agency sites which may constitute the prospective military context to which the Fast Flow Nozzle may be deployed are graphed below.[61] A "site" is defined by the Department of Defense as a specific geographic location where the DoD owns or manages land, buildings, structures or linear structures. Sites are assigned to military installations. A site may exist in one of three forms: land only (where there are no facilities present); facility or facilities only (where the underlying land is neither owner nor controlled by the government); and land and facilities. An installation is commonly referred to as a base, camp, post, station, yard, center, homeport facility for any ship, or any other activity under the jurisdiction, custody or control of the DoD. Further definitions can be sought by consulting the relevant source. [62]

In general, the DoD manages a property portfolio consisting of more than 539,000 facilities (buildings and structures) located on more than 5,570 sites, on approximately 29 million acres. According to the Office of the Deputy Under the Secretary of Defense (Installations and Environment), the DoD footprint encompasses the 50 states, 7 territories, and 38 foreign countries. The majority of foreign sites are located in Germany (235), Japan (123), and South Korea (87). [63]

---

[61] Ibid.

[62] Ibid.

[63] Department of Defense. "Base Structure Report, Fiscal Year 2009 Baseline (A Summary of DoD's Real Property Inventory)." www.defense.gov/pubs. Department of Defense, Aug 2008. Web. May 2010. <http://www.defense.gov/pubs/pdfs/2009baseline.pdf>

Distribution Statement A: Approved for Public Release; Distribution Unlimited

Figure 18: Geographic Distribution of Department of Defense (DoD) Sites[64]

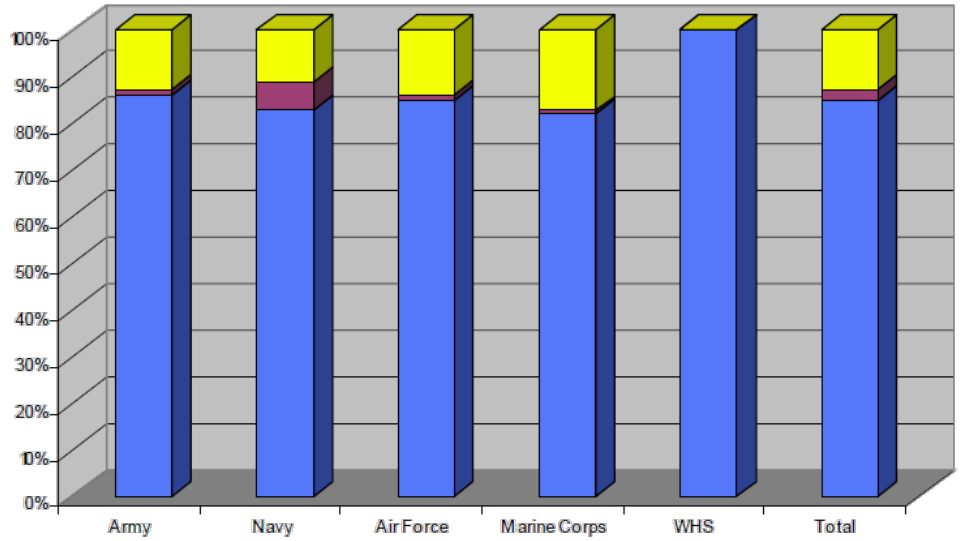

Area	Army	Navy	Air Force	Marine Corps	WHS	Total
United States	2,004	1,011	1,590	123	14	4,742
Territories	29	72	19	1	0	121
Overseas	293	136	261	26	0	716
Total	2,326	1,219	1,870	150	14	5,579

Figure 1. Number of DoD Sites by Military Service/WHS

When the military market is specified to include the military context of DoD sites and facilities, there are 5,579 sites specifically possessed by the DoD to which the Fast Flow Nozzle may integrated within the military market. The above distribution can be further broken down as DoD sites are classified as either buildings, structures, and linear structures.[65]

Table 18: Number of DoD Facilities by Type, Worldwide

Geographic Area	Building	Structures	Linear Structures	Total
United States	247,209	140,953	37,854	**426,016**
U.S. Territories	6,381	3,331	842	**10,554**
Overseas	53,705	39,515	9,563	**102,783**
Total	**307,295**	**183,799**	**48,259**	**539,353**

[64] Ibid.

[65] Ibid.

Distribution Statement A: Approved for Public Release; Distribution Unlimited

Of the five branches of the United States military, the U.S. Army manages the largest number of DoD facilities at 242,773. This top rank is followed by the Navy (112,215), the Air Force (142,661), the Marine Corps (41,184), and the Washington Headquarters Service (WHS, 520). Ultimately, the figures outlined above provide a general framework of DoD facilities—or military context—within which the Fast Flow Nozzle may find market relevance and/or market opportunity. It is within DoD buildings, structures, and linear structures that the Fast Flow Nozzle may be installed for use by military end-users. Similar to varying levels of ballistic threat which may be found within deployment locales, such variation may exist within the bounds of the DoD property portfolio. That is, sites, facilities, or installations which endure an increased level of ballistic threat or explosive exposure may realize an increase in value for the Fast Flow Nozzle's fire and explosion mitigation benefits. It is worth noting that given the connotation of ballistic threat carried by some DoD sites and facilities, or their occupants, the above market size may prove somewhat smaller as some DoD facilities may have pre-existing systems in place to defend against and mitigate fire and explosion exposure.

The Department of Defense (DoD) requested $708 billion for fiscal year (FY) 2011. The budget includes $549 billion in discretionary budget authority to fund base defense programs and $159 billion to support overseas contingency operations (OCO), primarily in Afghanistan and Iraq.[66] The FY2011 base budget represents an increase of $18 billion over the $531 billion enacted for FY2010. This is an increase of 3.4 percent, or 1.8 percent real growth after adjusting for inflation. While the establishment of military installations overseas (permanent or temporary) does not necessarily imply that fire suppression systems will be employed and integrated into the fire or explosion response plans of the military, it is possible that a technology like the Fast Flow Nozzle may be employed in an attempt to provide one additional layer in a pursuit to protect high-value targets or assets.

Of particular interest may be the budget allocation to overseas contingency operations (OCO). That is, the assumption may be maintained that deployment carries correlation to an increased exposure to fire and explosive threats and subsequently, a potentially increased need for such protective measures as the Fast Flow Nozzle. The funds ($159 billion) allocated to OCO are primarily for support of operations within Afghanistan and Iraq (*i.e.* 132,000 deployed forces) and are broken down as follows:

[66] U.S. Department of Defense, Office of the Assistant Secretary of Defense (Public Affairs). "DOD Releases Defense Reviews, 2011 Budget Proposal, and 2010 War Funding Supplemental Request - Update." Defense.gov News Release. U.S. Department of Defense, February 01, 2010. Web. May 2010. <http://www.defense.gov/Releases/Release.aspx?ReleaseID=13281>.

Distribution Statement A: Approved for Public Release; Distribution Unlimited

Figure 19: FY 2011 Overseas Contingency Operations (OCO) Budget: $159.3 Billion[67]

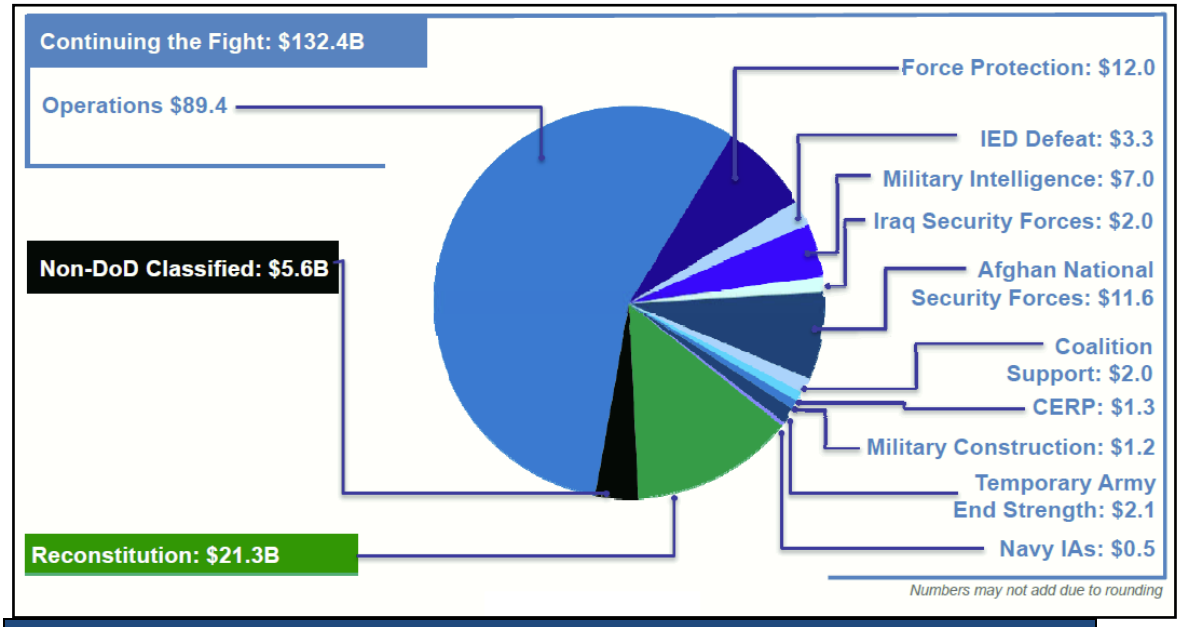

Table 19: FY2011 Overseas Contingency Operations (OCO) Budget: $159.3 Billion	
Category	***Allocation**
Continuing the Fight	$132.4
Operations	$89.4
Force Protection	$12.0
IED Defeat	$3.3
Military Intelligence	$7.0
Iraq Security Forces	$2.0
Afghan National Security Forces	$11.6
Coalition Support	$2.0
CERP	$1.3
Military Construction	$1.2
Temporary Army End Strength	$2.1
Navy IAs	$0.5
Reconstitution	$21.3
Non-DoD Classified	$5.6

**Numbers may not add due to rounding*

Within this breakdown, a technology such as the Fast Flow Nozzle may be included in overseas *Military Construction* which has an anticipated allocation of $1.2 billion dollars.

[67]U.S. Department of Defense. "SUMMARY OF THE DOD FISCAL 2011 BUDGET PROPOSAL." www.defense.gov/news/FINAL PRESS RELEASE v3 1.pdf. U.S. Department of Defense, 01 Feb 2010. Web. May 2010. <http://www.defense.gov/news/FINAL%20PRESS%20RELEASE%20v3%20%201.pdf>.

Distribution Statement A: Approved for Public Release; Distribution Unlimited

In addition to OCO considerations, procurement allocations within the DoD budget may also shed light on potential military purchasing power. If Fast Flow Nozzle licensees or manufacturers are able to penetrate the military market, procurement allocations may be the funds with which military end-users may purchase the Fast Flow Nozzle. Procurement appropriation is listed at $104.8 billion in FY2010, projected to increase by 7.7% to $112.9 billion in FY2011. Again accepting budgetary quantification as representative of market priorities and here, procurement to be indicative of prospective purchasing power, opportunity within the military market appears to be increasing. Of course, an increasing procurement budget does not guarantee that budget comptrollers will allocate funds to purchase the Fast Flow Nozzle and the traditional value stream will need to be examined.

The FY 2011 procurement budget ($112.9 billion) can be further specified into programs designated as Major Defense Acquisition Programs (MDAP). $80.0 billion has been allocated for MDAP in FY2011. Funding categories are broken down by mission area to include:

Figure 20: FY 2011 Major Defense Acquisition Program (MDAP) Budget: $80.0 Billion[68]

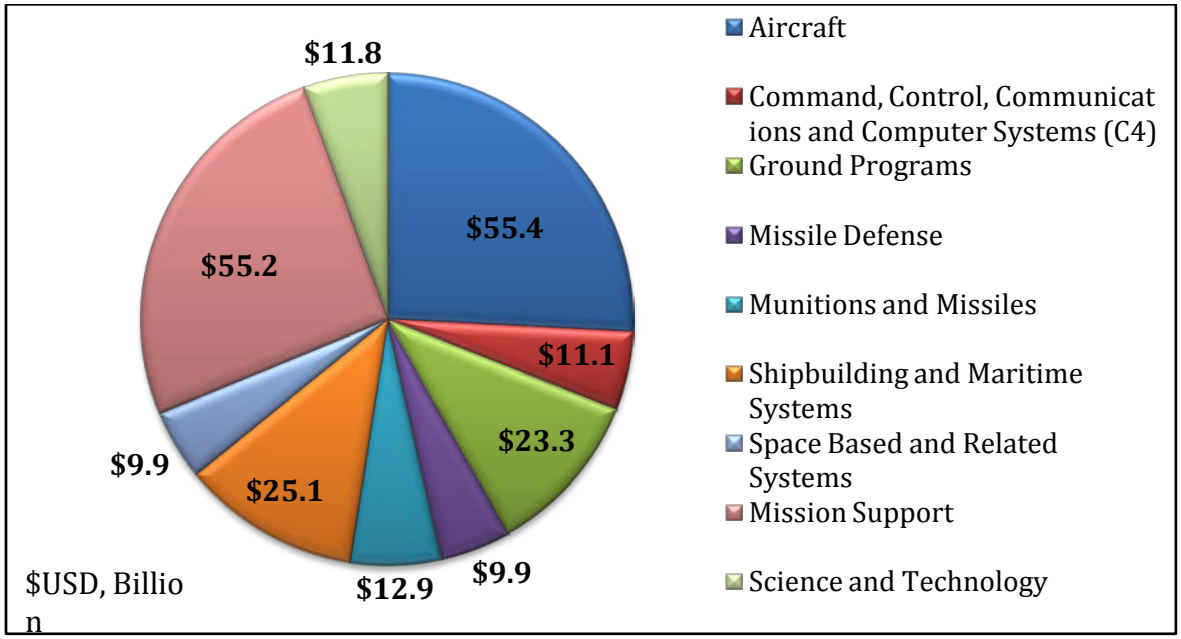

[68] Ibid.

Distribution Statement A: Approved for Public Release; Distribution Unlimited

Table 20: Major DoD Acquisition	
Major Defense Acquisition Program	**FY2011 Budget Allocation (billion $USD)**
Aircraft	55.4
Command, Control, Communications and Computer (C4) Systems	11.1
Ground Programs	23.3
Missile Defense	9.9
Munitions and Missiles	12.9
Shipbuilding and Maritime Systems	25.1
Space Based and Related Systems	9.9
Mission Support	55.2
Science and Technology	11.8

Of the nine categories, *Munitions and Missiles* may prove to be the most relevant to the Fast Flow Nozzle—acknowledging the potential for increased fire and explosion scenarios for which the Fast Flow Nozzle may find enhanced relevance. The Munitions and Missiles allocation of $12.9 billion focuses primarily on developing and procuring weaponry. In attempts to identify budget segments which have the potential to include Fast Flow Nozzle expenditure, the unit may have the potential to be included in *Military Construction*. Or, the military's budget allocation to such measures as new construction may provide comparative insight into the Fast Flow Nozzle's prospective military market. That is, comparable relevance for the Fast Flow Nozzle may be recognized in the dominant allocation of funds to military construction—facilities into which fire and explosion mitigation technologies may be integrated.

Distribution Statement A: Approved for Public Release; Distribution Unlimited

Figure 21: FY 2011 Military Construction Budget Allocation: $16.9 Billion[69]

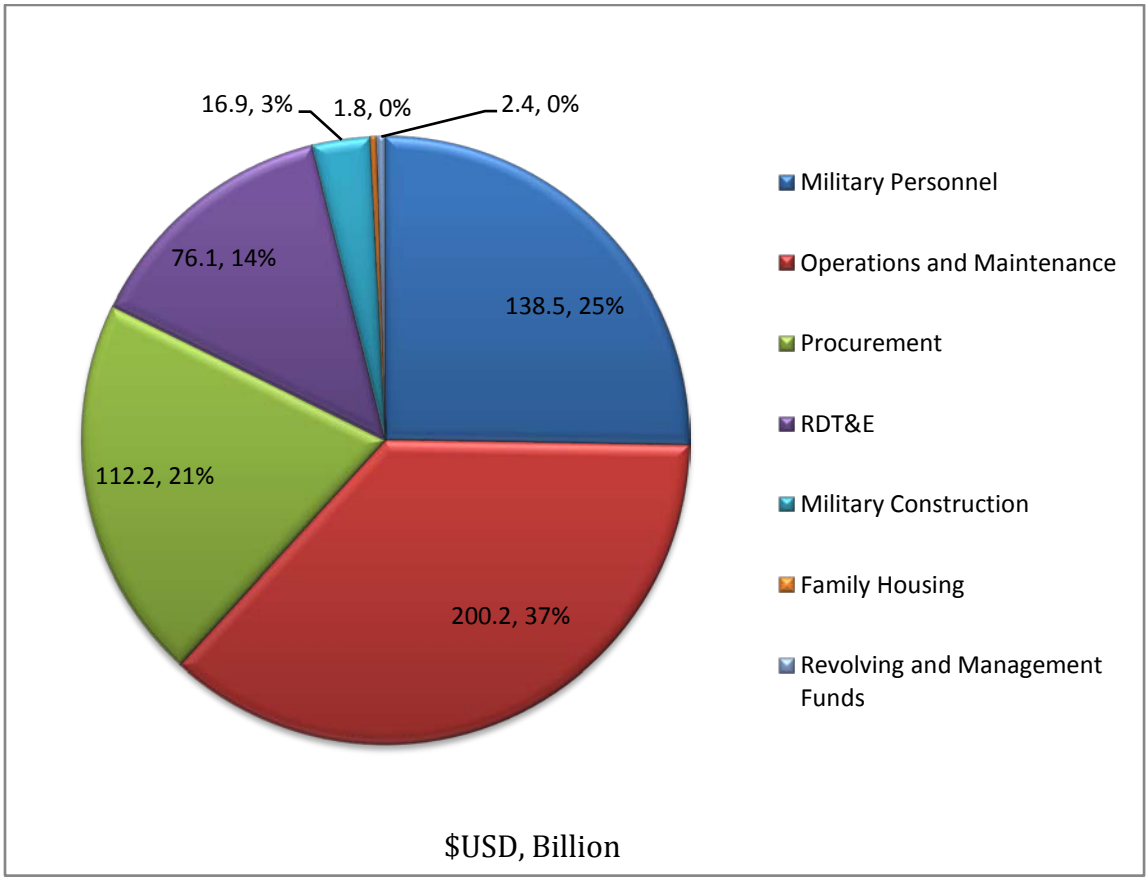

Ultimately, when DoD budgets are interpreted to be representative of market quantification—both the general DoD budget and OCO are projected to increase in 2011. Procurement allocation, prospectively indicative of military purchasing power, is also projected to increase in FY2011.

3.2.1.2 Federal Laboratories

One area for which a demand for fire suppression systems may exist is that of federal laboratories. While the nature of research conducted in federal laboratories may drive the strength of demand, it is understood that some research activities may carry increased potential for explosive/fire disasters such as in the realm of explosives manufacturing research or the research itself may necessitate systems which quickly extinguish or work to control explosions or fires (*i.e.* jet engine testing). At present, there are 316 laboratories listed on the The Federal Laboratory Consortium (FLC) website as part of the consortium. While not all labs may have use for technologies such as the Fast Flow Nozzle, the labs listed may represent a prospective

[69] Ibid.

Distribution Statement A: Approved for Public Release; Distribution Unlimited

pool of end users for the nozzle. The table and figures below outline the distribution of FLC labs by department/agency, and geography:[70]

Table 21: FLC Laboratories by Department or Agency			
Laboratory or Department	Labs	Laboratory or Department	Labs
Department of Defense	128	Dept. of Homeland Security	5
Dept. of Interior	64	Dept. of Transportation	5
Dept. of Health and Human Services	38	Dept. of Commerce	4
Dept. of Energy	32	National Science Foundation	4
Dept. of Agriculture	16	Dept. of Labor	1
NASA	10	National Security Agency	1
Environmental Protection Agency	7	Tennessee Valley Authority	1

[70] "About the FLC." *FLC*. Federal Laboratory Consortium, May 2011. Web.

Distribution Statement A: Approved for Public Release; Distribution Unlimited

Figure 22: Federal Laboratory Distributions across the U.S.

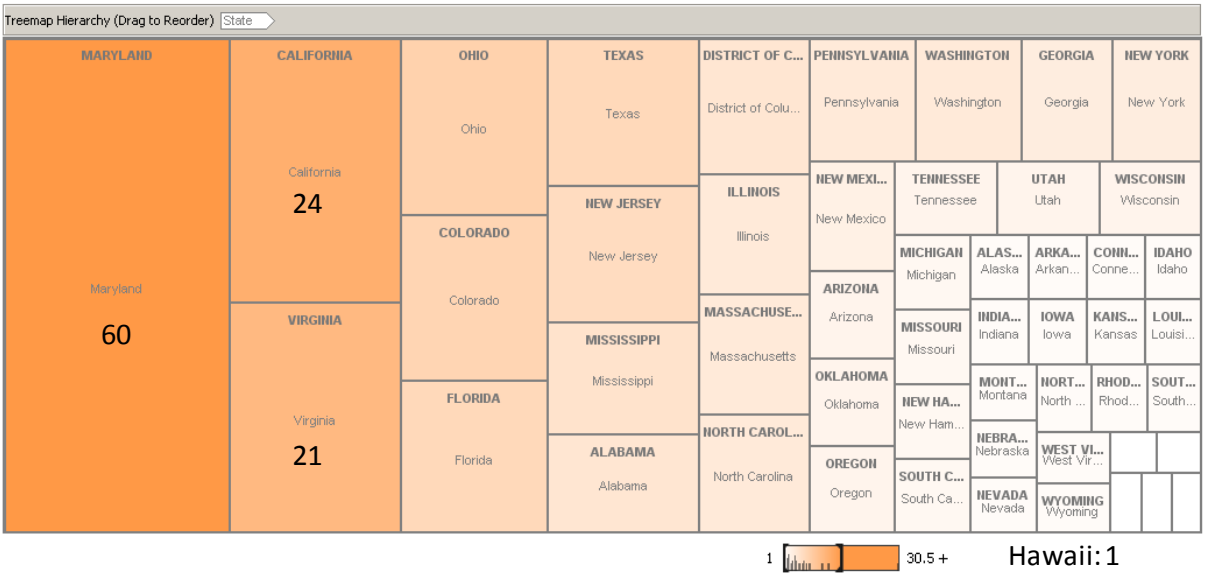

Figure 23: Geographic Representation of Federal Laboratories

Distribution Statement A: Approved for Public Release; Distribution Unlimited

As noted, not all laboratories may require technologies such as the Fast Flow Nozzle in lab research functions; however, these laboratories represent a potential pool of end users within the federal marketplace. As such, a closer examination of their research operations and risk potential may further narrow the prospective client field. While such an examination is outside the scope of this assessment, the identification of these prospective end users may work to build a more robust picture of the market opportunity for the Fast Flow Nozzle. In terms of potential opportunity with regard to defense research, the Department of Defense base allocation of $76.1 billion to research development test and evaluation (RDT&E) programs for fiscal year 2011.[71] Further, and as example, the Army Contracting Command, Joint Munitions and Lethality Contracting Center, Joint Armament Center posted a Sources Sought notice on FedBizOpps.gov for firms with the capability to "manufacture, repair and supply parts, controllers, tooling and hardware for high speed portable or permanent deluge equipment, fire suppression systems."[72] Further, the request specifies the following requirements:[73]

The portable deluge system, as a minimum, will consist of:

- Two detectors
- Two nozzles
- A pressurized tank with at least 100 gallons of water
- Response time must not exceed 100 milliseconds
- Should be tied to backup water supply
- Must be compatible with existing systems

Note should be made that this was not a formal request for proposal. The interested vendor list consists of Pyrotech USA, Inc., and Risketec Solutions, Inc.[74]

In addition to the Army Contracting Command's interest in fire suppression systems, the Air Force Research Laboratory (AFRL's) has been actively evaluating suppression technologies to be used in munitions applications. While several of these technologies will be discussed in the *Competitive Landscape* section of this report, it appears that similar research efforts exist in other DoD labs. Perhaps the Fast Flow Nozzle may work to meet the needs of the other DoD labs seeking high performance fire and explosive fire suppression systems.

---

[71] "RDT&E Programs." *DoD*. Office of the Under Secretary of Defense (Comptroller), 2011. Web

[72] "42-- High Speed portable or permanent deluge equipment, fire suppression system."*FedBizOpps.gov*. General Services Administration, 2011. Web.

[73] Ibid

[74] Ibid

Distribution Statement A: Approved for Public Release; Distribution Unlimited

3.2.2 Military Market Drivers and Influences

The drivers and influences for the military market include:

- Federal spending on RDT&E

Recognizing the above outlined potential military end-users, the market definition recognized by this assessment also notes the specification of military end-users within the military context of military bases or, otherwise designated military site or facility. Recognizing the military context to be assigned by the Department of Defense (DoD), it is understood that the existence of DoD controlled facilities may also work to drive military demand for a technology that mitigates damage resultant from fires and explosions. That said, DoD controlled facilities, as discussed above represent both a quantification and a driving frorce for technologies such as the Fast Flow Nozzle.

RDT&E funds from the federal government may drive demand for a technology such as the Fast Flow Nozzle. In additional to providing a means by which the nozzle may be procured, RDT&E efforts may implicitly drive demand as the nature of research may necessitate technologies that work to control explosions and fires. While this driver is discussed above as a potential market quantifier, it is also noted to drive the procurement of technologies employed within testing environments. As will be discussed within the *Competitive Landscape* section of this assessment, there are existing efforts within a number of Department of Defense laboratories aimed at developing fire suppression equipment that optimize suppression capabilities and minimize response time.

While it is also understood that Defense spending in areas such as construction may drive demand for suppression systems that are integrated into structures, it appears that the greatest opportunity may exist in munitions applications.

Moving forward, this assessment will work to identify both potential sources of competition for the Fast Flow Nozzle and prospective licensees for the technology.

Distribution Statement A: Approved for Public Release; Distribution Unlimited

4 Competitive Landscape

The *Competitive Landscape* section of this assessment will first work to identify several currently commercialized technologies that may represent competition for the Fast Flow Nozzle. After a brief examination of potential competition is complete, an assessment of competing firms in the market will work to identify potentially attractive licensees or partners for the Fast Flow Nozzle technology.

As discussed in the market section of this assessment, a recent report released by Frost and Sullivan entitled *North American Fire Suppression Systems Market* projects that the North American market for fire suppression systems is expected to grow from $591 million in 2005 to roughly $955 million in 2013, with a compound annual growth rate of 5.6%.[75]

Figure 24: North America Fire Suppression Systems Market 2005-2013

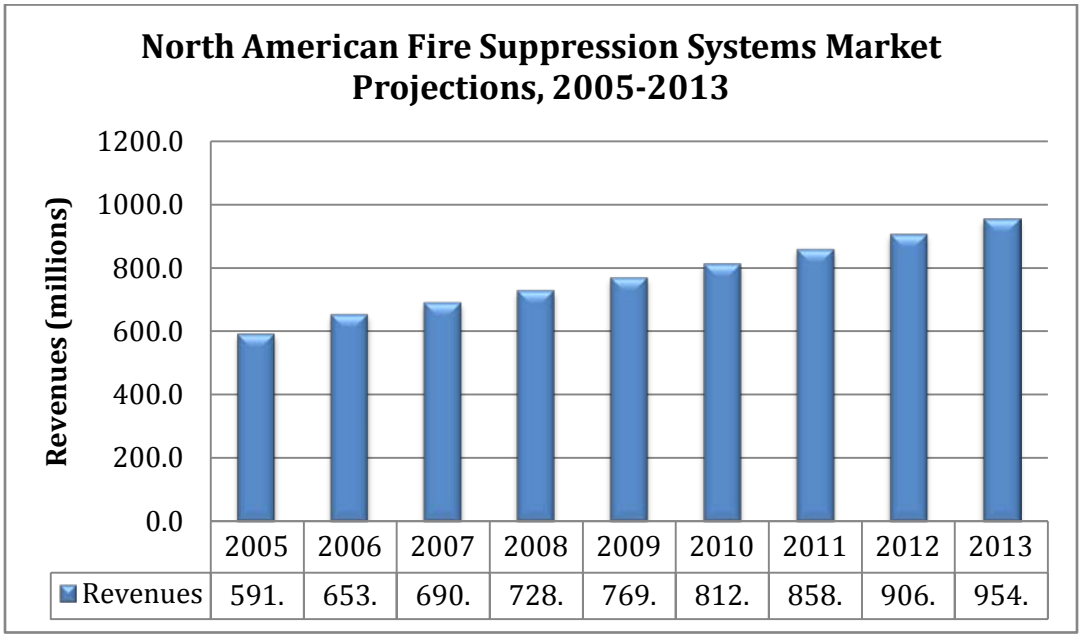

In addition to new building construction and renovation projects, the report also cites security concerns for commercial and industrial sites as a driving force in the market growth for fire suppression systems. In addition to traditional sprinkler systems, industrial applications for manufacturing may work to drive market growth in a positive manner.[76]

[75] "New Building Construction and Renovation Projects Drive North American Fire Suppression Systems."*Frost & Sullivan*. Frost & Sullivan, 31 Mar 2008. Web.

[76] Ibid

Distribution Statement A: Approved for Public Release; Distribution Unlimited

The key players in the fire protection/suppression market include Tyco Fire Suppression and Building Products, Globe Fire Sprinkler Corporation, VFP (Viking Fire Protection) Fire Systems, Fike Corporation and United Technologies (UTC). [77]

While there are several large companies that compete within the *fire suppression* market, the industry is generally characterized as fragmented, with hundreds of small firms competing for a large amount of market share. [78]

In addition, while the market may be characterized as fragmented, it is generally considered a mature market, where differentiation and innovation are key strategic components with regard to firms' competitive capabilities. Further investigation reveals that a significant amount of merger and acquisition activity has characterized the industry over the past decade. For instance, Angus Fire Armour, Badger Fire Protection, Chemetron Fire Systems, Kidde Fire Fighting, and Marioff Corp., are all well known companies within the fire suppression market. All of these companies are subsidiaries of United Technologies, as part of their fire suppression portfolio of companies. Further, Ansul, Inc., Gem Sprinkler Co., Grinnel, National Foam, Inc., and Pyro-Chem are all identified as major players in the fire suppression market by Frost and Sullivan. All of these are subsidiaries of Tyco International. While there are a number of different market players that compete on niche competencies, many larger firms are diversifying their product line portfolios through acquiring companies with competencies that fill gaps in their own product lines. As such, when considering partnership or licensing opportunities, targeting larger firms with a diverse fire detection and suppression portfolio may serve to enhance market penetration potential, as existing sales and marketing channels may be leveraged.

Frost & Sullivan make note that while the market may have a number of smaller and niche players, increased price sensitivity and a growing trend of mergers and acquisitions may make it difficult for existing small and niche firms to compete long-term. Even though the market is growing in maturity, it appears that the industry is entering the last phase of a shakeout stage where larger firms tend to absorb smaller and niche competitors. This may be important to consider when evaluating potential licensees or partners.[79] While smaller firms may have existing manufacturing capabilities and more horizontal management structures, larger, more stable firms may make more attractive licenses or partners, as they may constitute stability and be sustainable in the marketplace.

---

[77]"New Building Construction and Renovation Projects Drive North American Fire Suppression Systems."*Frost & Sullivan*. Frost & Sullivan, 31 Mar 2008. Web.

[78]"2010 Annual Report." *Tyco Annual Report*. Tyco International, 2011. Web.

[79] "New Building Construction and Renovation Projects Drive North American Fire Suppression Systems."*Frost & Sullivan*. Frost & Sullivan, 31 Mar 2008. Web.

Distribution Statement A: Approved for Public Release; Distribution Unlimited

4.1 Existing Technologies

Competition for the Fast Flow Nozzle includes traditional high flow rate sprinkler heads. Some specific competitive technologies are listed below. Note may be made that while the Fast Flow Nozzle competes within the market defined as "Fire Suppression Systems," based on its performance specifications, it specifically competes within a relatively small segment of the overall market that aims to deliver high volumes of water very quickly in response to high-intensity fires.

One competitive technology is Fike's Clean Agent Fire Suppression system which uses DuPont's HFC-227 ea/FM-200® as the extinguishing agent, which leaves no residue, and does not require costly clean-up. It provides speed in fire suppression, reduces damages, saves on floor space, and allows for visibility. This system discharges in ten seconds or less, which extinguishes fires quickly and effectively.[80]

Another Fike technology that may constitute a competitive technology is the Explosion Suppression System for Ultra-high Speed Fire Suppression Applications. This technology was evaluated by the Air Force Research Laboratory (AFRL) in 2007. The system was tested and recorded with high-speed digital cameras, and response times were evaluated over a total of 9 tests. The reaction time of the system ranged from 2.1-2.9 milliseconds with an average response time of 2.9 milliseconds.[81] While this time is far superior to the response time required by National Fire Protection Association (NFPA) Standard 15, which is 100 milliseconds.[82] AFRL's assessment of Fike's suppression system may be found in Appendix B.

Another competitive technology is the Air Force Research Laboratory's (AFRL's) Blast Initiated Deluge System which is described as an ultra-high-speed fire suppression system.[83] This system was developed in response to incidents at munitions plants which caused considerable equipment damage, production delays, and personnel injuries. It was developed to stop high velocity fires caused by deflagration of explosives, propellants, and pyrotechnic materials. A detector was developed which is one hundred times faster than the best detector on the market. The water velocity is three times faster than the state-of-the-art system. In live fire experiments with up to four pounds of magnesium-Teflon pyrotechnic material, the system put water on fires 36 inches

---

[80] Notes from Interview with Fike Corporation by Emerging Growth Enterprise analyst Byron Clemons as described in the final presentation to NAVSEA Crane on November 3, 2010.

[81] Hawk, John. "Evaluation of Fike Corporation's Explosion Suppression System for Ultra-High Speed Fire Suppression Applications." *Air Force Research Laboratories*. U.S. AFRL, Dec 2007. Web. <http://dodreports.com/pdf/ada480288.pdf>

[82] Ibid

[83] Dierdorf, D. et.al. "Blast Initiated Deluge System An Ultra-High-Speed Fire Suppression System" < http://www.nfpa.org/assets/files//pdf/proceedings/blast_initiated_deluge_system-d.dierdorf-j.hawk_paper.pdf> January 2006.

Distribution Statement A: Approved for Public Release; Distribution Unlimited

from the spray head 6 milliseconds after detection and extinguished fires in as little as 16 milliseconds. It is said that the detector used in the system is 100 times faster that the best detector on the market.[84] AFRL's assessment of this technology may be found in Appendix C. Note may be made at this point that it appears that AFRL is actively evaluating suppression systems and as such, may find use with the Fast Flow Nozzle.

Another competitive technology is ANSUL's (a Tyco International Company) INERGEN® fire suppression system based on nitrogen, argon, and carbon dioxide which can extinguish a flammable liquid fire in typically 17-21 seconds or an average of 19 seconds.[85]

Other competitive technologies include Fire Equipment Inc.'s clean agent fire suppression systems for protection of high-value assets, portable extinguishers, sprinkler systems, and explosion suppression systems.[86]

Still other competitive technologies include ASSI Fire Protection Systems waterless fire protection systems including Include FM-200, 3M Novec™ Fire Protection Fluid, Argonite™ Systems, FE-13™ Extinguishing System for harsh and demanding applications such as occupied structures.[87]

The competitive products, manufacturers, and key relevant details are summarized in Table 8 below. Note may be made that these products represent a small number of potential competitors; however, they are representative of the types of systems that are currently commercialized and therefore may compete against the Fast Flow Nozzle.

---

[84] Ibid

[85] INERGEN® Fire Suppression Product Information from ANSUL website, https://www.ansul.com/en/Products/clean_agent_systems/inergen.asp> viewed on May 23, 2011.

[86] Kelly, R. Fire Suppression Systems < http://firesuppressionsystems.com/>2011.

[87] ASSI Fire Protection Systems, Waterless Fire Suppression Systems < http://www.advancedsafetysystems.com/products.html> 2011.

Distribution Statement A: Approved for Public Release; Distribution Unlimited

Table 22: Existing Suppression Systems		
Product Name	**Manufacturer**	**Relevant Details**
Clean Agent Fire Suppression System-FM-200®	Fike Corporation	Discharges in ten seconds or less.
INERGEN® Fire Suppression System	ANSUL (a Tyco International Company)	Based on nitrogen, argon, and carbon dioxide and can extinguish a flammable liquid fire in 17-21 seconds, with an average of 19 seconds.
AFRL Blast-initiated Deluge System	AFRL (Air Force Research Laboratory)	Detector is one hundred times faster than the best detector on the market and the water velocity is three times faster than the state-of-the-art system. In live fire experiments, the system put water on fires 36 inches from the spray head 6 milliseconds after detection and extinguished fires in as little as 16 milliseconds.
Fire Suppression Systems	Fire Defense Equipment Company	Can be based on clean agents (faster than water, safe for people, require no clean-up, and cause no damage to business assets), carbon dioxide, foam, and dry chemical systems.
Clean Agent Fire Suppression Systems	Fire Equipment Inc.	Clean agent fire suppression systems for protection of high-value assets, portable extinguishers, sprinkler systems, and explosion suppression systems.
Waterless Fire Suppression Systems	ASSI Fire Protection Systems	Include FM-200, 3M Novec™ Fire Protection Fluid, Argonite™ Systems, FE-13™ Extinguishing System for harsh and demanding applications such as occupied structures.

4.2 Competitive Ability

The key competitive ability of the Fast Flow Nozzle is its fast rupture and flow material and its ability to deliver virtually unlimited extinguishing material in 10-15 milliseconds, which is less than half the response time of competitive materials. In addition, the nozzle delivers water at nearly fifteen times the flow rate of existing fire suppression systems. Furthermore, the flow rate

Distribution Statement A: Approved for Public Release; Distribution Unlimited

from one nozzle is sufficient to replace six traditional valve heads. In addition, the modified nozzle can provide 300-350 GPM compared to the standard 20-25 GPM. Also, the system allows for retrofitting of existing systems and can provide a higher flow rate in existing piping. It should be noted that the system has passed testing by the Naval Surface Warfare Center-Crane Division. The system has strength and durability to perform in fire situations. In addition, the portable system prototype is more affordable than current fire suppression systems. Considering the expense over the lifetime of the product, the nozzle is a high value product with a low lifetime cost.

4.3 Key Competitors and Potential Licensing and Partnership Targets

Understanding potential competition that may exist in the form of currently commercialized fire suppression systems, the Fast Flow Nozzle may be an attractive technology for a firm competing in the fire suppression market. Understanding the Fast Flow Nozzle's unique prospective advantages and performance specifications, it may be a good fit for an existing product line, and may ultimately augment an existing competing firm's ability to meet the needs of a wider user base. That said, a number of firms currently competing in the fire suppression market may represent attractive targets for licensing opportunities and potential alliances. As such, this section of the assessment will briefly explore several firms that may constitute potentially attractive targets for such activities. While this assessment does not rank or assert that one target may be more attractive than the next, by identifying several potentially attractive targets, a deeper exploration into the nuances of what any form or partnership would look like may begin.

The following chart represents a high level assessment of major companies that compete within the fire suppression system markets, and the specific segment within which they compete. Data has been compiled from the companies' websites. As there are three major segments within the overall fire suppression market, a high-level view of the firms that compete in each segment may provide a foundation upon which a more robust picture of prospective partnerships may begin to emerge. Note that this chart does not take into account whether companies are subsidiaries.

Distribution Statement A: Approved for Public Release; Distribution Unlimited

Table 23: Fire Suppression Market Players			
Company	**Water**	**Gas**	**Specialty**
3s, Inc	X	X	X
A &M Fire and Safety Equipment, Inc			
Adams Fire protection	na	na	X
AFEX, Division of Bronaventure group, Inc.	na	na	X
Amerex Corporation	X	X	X
American Fire Protection, Inc	X	X	X
ANSUL, Inc	X	X	X
Best Fire	X	X	X
County Fire Protection, Inc	X	X	X
EMCOR	na	X	X
Fike Corporation	X	X	X
Fire Chief Equipment Co, Inc.	X	X	X
Fire control Systems, Inc	na	X	X
Fire Pro USA	X	na	na
Fire Systems, Inc			
Fireaway	na	X	X
Fireboy-Xintex	na	X	X
General Fire Extinguisher Services, Inc	X	X	X
Globe Technologies Corporation	Fire Suppression System Components		
Haines City Fire Extinguisher service, Inc	X	na	X
Heiser Logistics, Inc	X	X	X
International POD, LLC	na	na	X
Jomarr Products, Inc	na	na	X
Jorgensen Company	X	X	X
Kiddie Fire Systems	na	X	X
Kimbrough Fire Extinguisher Co.	na	na	X
Koorsen Fire & Security, Inc	X	na	X
Life Mist Technologyies	X	na	na
Monroe Extinguisher Company	na	X	X
Peripheral Manufacturing, Inc	na	na	X
PHL Links, LLC	Fire Suppression System Components		

Distribution Statement A: Approved for Public Release; Distribution Unlimited

PYRO-CHEM	X	X	X
Red Ball Oxygen	X	X	X
Remstar	na	na	X
Safety Systems Technology (NV), Inc	na	X	na
Safety Systems, Inc	na	X	X
SBT	na	X	
Sea-Fire Marine	na	X	X
Sensor Electronics Corporation	Gas Detectors		
SK Bowling Company, Inc	na	X	X
Southern Fire Protection	na	X	X
Strad Energy/Fire Caddy	na	na	X
Strategic Corporate Developments			
Sutton Clark Supply, Inc	X	X	X
T & S Fire and Security, Inc	na	X	X
The Safety Team, Inc	X	X	na
Total Safety	na	X	X
Tyko Fire and Security	X	X	X
Universal Sprinkler Company	X	X	X
UTC Fire and Security	X	X	X
Viking Group/Minimax	X	X	X

As noted previously, many larger firms are diversifying their product line portfolios through acquiring companies with competencies that fill gaps in their own product lines. As such, when considering partnership or licensing opportunities, targeting larger firms with a diverse fire detection and suppression portfolio may serve to enhance market penetration potential, as existing sales and marketing channels may be leveraged. The following companies are identified as potentially attractive targets for licensing and partnership opportunities.

Tyco International

Tyco Fire Protection Products is a subsidiary of Tyco International and was formed as part of Tyco Safety Products to create a portfolio of the world's most recognized brands and create a comprehensive line of products that meet a wide range of customer needs within the fire suppression market.[88] Several well known subsidiaries of Tyco Fire Protection Products include:[89]

- Ansul

[88] 2010 "Fire Suppression Systems." *TycoProducts*. Tyco International, 2011. Web.

[89] Ibid

Distribution Statement A: Approved for Public Release; Distribution Unlimited

- Grinnel
- Hygood
- Nureppin
- Pyro-chem
- Skum
- Rapid Response

While the above subsidiaries do not represent the entire portfolio of Tyco fire suppression companies, it serves as an example that Tyco, among other firms, is diversifying its product portfolio through acquisitions. Further, serving 14 core markets, Tyco has well established sales and marketing channels that may be leveraged in order to take a technology such as the Fast Flow Nozzle to market. Of particular note may be Tyco's penetration and current presence in the following markets:

- Government and Military
- Manufacturing
- Marine
- Metal Processing
- Mining
- Petroleum, oil and gas
- Power Generation

As these markets represent areas for which the Fast Flow Nozzle may hold enhanced market relevance, Tyco's existing footprint in these areas may be of particular importance when considering potential targets for licensing or partnership opportunities.

United Technologies (UTC)

UTC Fire & Security is a subsidiary of United Technologies. Their core products focus on meeting the needs of clients in a variety of markets by providing fire detection and suppression technologies to a wide range of markets. In terms of fire suppression systems, UTC provides three main types of products, which include clean agents, explosion protection, and water mist systems. Within these product offerings, several major subsidiaries that manage well known and well respected products in the market are:[90]

- Angus Fire Armour
- Badger Fire Protection
- Chemetron Fire Systems
- Kidde Fire Fighting
- Marioff Corporation

[90] "United Technologies ." *UTC Fire Suppression*. United Technologies, 2011. Web. 29 Jun 2011. <http://www.utcfireandsecurity.com>.

Distribution Statement A: Approved for Public Release; Distribution Unlimited

Similarly to that of Tyco, UTC has a number of existing competencies that may make it an attractive target for partnership or licensing opportunities.

Fike Corporation

Fike Corporation may offer a unique partnership prospect, as it not only competes in the overall fire suppression market, it is a leader in the manufacturing and distribution of rupture discs that are integral components of the Fast Flow Nozzle's functionality. Additionally, Fike manufactures an explosion suppression nozzle that is capable of detecting and responding to explosions in less than 1 millisecond.[91] Fike is a major competitor in a number of segments within the fire suppression market including:

- Pressure relieve systems
- Fire suppression systems
- Detection and control
- Fire alarm
- Explosion protection
- Outfield products

Fike's unique position in the market may make it an attractive partner. Fike also has well established global service and sales networks which include wholly-owned subsidiaries, manufacturer's representatives, distributors and dealers.[92] Note may be made that Fike appears to have existing relationships with federal laboratories including AFRL specifically regarding high-speed, high-temperature suppression systems.

VFP Fire Systems

VFP Fire Systems, Inc. has been a leading company in the fire suppression market since 1927. VFP offers a diverse fire sprinkler product line including wet pipe, dry pipe, deluge and pre-action fire sprinkler systems. VFP is a leading company in the deluge nozzle segment, and serves a wide base of clients in this market from manufacturing and metal processing to government applications. In addition to a full product line, VFP offers a number of complementary services including:

- Engineering and design
- Installation
- Project Management
- Service and inspection
- Building and retrofit

[91] "Fike Corporation Fire Suppression." *Fike Fire Suppression*. Fike Corporation, 2011. Web. 29 Jun 2011. <http://www.fike.com/suppression.html>.

[92] Ibid

Distribution Statement A: Approved for Public Release; Distribution Unlimited

Coupled with a diverse product offering, VFP has been a leader in the fire protection and suppression market since the 1920s. [93]

While brief in nature, the above overview of potential licensee or partnership targets may serve as an initial point of consideration when evaluating go-to-market strategies. As previously noted, M&A trends in the fire suppression marketplace may drive market penetration strategies towards licensing or partnership opportunities, as partner/licensee competencies and existing market positions may be leveraged, ultimately securing a path to market.

[93] "VFP Fire Systems." *VFP Fire*. VFP, 2011. Web. <http://www.vfpfire.com>.

Distribution Statement A: Approved for Public Release; Distribution Unlimited

5 Cautions and Considerations

This assessment has worked to provide a market overview for the primary applications of the Fast Flow Nozzle and its prospective advantages relative to existing and emerging technologies. As development of the Fast Flow Nozzle progresses including testing on various types and intensities of fires, and market opportunities are further identified, a variety of cautions and considerations will be further revealed. While by no means exhaustive, this discussion addresses only those cautions and considerations which are known at this time.

5.1 Approvals and Manufacturing Considerations

Underwriters Laboratories Inc. (UL) and Factory Mutual (FM) Approvals certifications are both necessary for fire protection/suppression equipment. Additionally, fire suppression systems must meet the standards laid out by NFPA Standard 15. Response time articulated in this standard is 100 milliseconds.

Since the Fast Flow Nozzle has not been commercially produced, a manufacturer would first need to be identified. Next a method of manufacturing would need to be determined. As installation costs may vary and are specific to end user needs, it may be difficult to specify exact manufacturing costs for the Nozzle. That said, it is understood that the Fast Flow Nozzle meets and exceeds performance requirements for commercial fire suppression commercialization.

5.2 Montreal Protocol [94]

The Montreal Protocol on Substances that Deplete the Ozone Layer is a treaty that aimed to phase out the production of numerous substances believed to deplete ozone. The treaty focused on several groups of halogenated hydrocarbons that are believed to contribute to the depletion of the ozone. This includes a number of halogenated hydrocarbons that were used in the suppression of fires. A number of systems that employ the phased out substances still exist today, and in many countries are being replaced by more ecological friendly systems.[95] As is the case, products such as 3M™ Novec™ has gained wide appeal for applications that once employed halogenated hydrocarbons in fire suppression strategies.

[94] "Montreal Protocol On Substances That Deplete the Ozone Layer." *UNEP*. United Nations Environment Programme (UNEP), 2006. Web.

[95] Ibid

Distribution Statement A: Approved for Public Release; Distribution Unlimited

5.3 Switching Cost

Moving forward, as a potential improvement over existing fire suppression technologies, and as an alternative solution to existing technologies, the Fast Flow Nozzle may constitute an incremental improvement over currently fielded systems. Improvements over existing fire suppression technologies are claimed, the subsequent embodiment of which may offer enhanced solutions. However, the question remains, will these improvements hold enough value for end-users to switch from existing technologies?

Generally speaking, there are two main switching cost scenarios which may be encountered within the market of existing technologies; first, the replacement and/or upgrade of a functional technology and second, the replacement of a non-functional or malfunctioning technology. These scenarios can be broken down into the following equations. These equations are conceptual in nature, created only as an example of considerations to be made as development ensues, and should not be interpreted as material decision making tools.

Switching Cost of Replacing and/or Upgrading a Functioning Technology

= (Lost Utility of Existing Functional Technology + Monetary Cost of Fast Flow Nozzle + Opportunity Cost of Fast Flow Nozzle Adoption) – Fast Flow Nozzle ROI

Switching Cost of Replacing a Nonfunctional or Malfunctioning Technology

= (Monetary Cost of Fast Flow Nozzle + Lost Cost Savings of Repairing the Existing Technology + Fast Flow Nozzle Adoption) – Fast Flow Nozzle ROI

Both scenarios involve the consumer bearing the monetary cost of the product (the purchase price), as well as the opportunity cost of embodiments of the Fast Flow Nozzle. Examples of costs in this regard may be potential training requirements to safely employ or maintain the Fast Flow Nozzle and any learning time necessitated by adoption. *Replacing and/or upgrading an existing functional technology* sees the specific cost of this technology's lost utility. *Replacing a non/malfunctioning technology* carries the specific loss of any cost savings were this technology to be repaired (at a lower cost) as opposed to replaced. While lost utility and sacrificed cost savings can be considered opportunity costs, they are here distinguished for the sake of clarity. As the Fast Flow Nozzle may be retrofitted into existing systems, this may reduce overall adoption cost, as only a number of components must be replaced, and the main components of the suppression system may stay intact.

Distribution Statement A: Approved for Public Release; Distribution Unlimited

Moving forward, as development of the Fast Flow Nozzle ensues, the questions of which of these variables are known, and which can be minimized can be asked by licensees and development entities. Current estimates place the price of the Fast Flow Nozzle $250 to $800 with system costs around $4500 per installation. As pricing structures for the Fast Flow Nozzle are determined, price points and future variations can be factored into such models as those above in an effort to consider their potential effect on overall switching costs.

Sellers of the Fast Flow Nozzle alone may not have control over the lost utility of end-users' existing functional technologies. However, the variables of *opportunity cost of the Fast Flow Nozzle* and *Fast Flow Nozzle ROI* could potentially be manipulated. As established, the opportunity cost of Fast Flow Nozzle adoption may refer to such costs as training requirements and learning time necessitated by switching to laser-based solutions. Minimizing these costs may offer one example of potential avenues to optimizing the costs associated with purchase and adoption.

The Fast Flow Nozzle's return on investment is primarily based on the technology's claimed advantages. That is, the Fast Flow Nozzle's prospective advantages may be what foster purchase motivation and work to counter any corresponding costs. The previously created chart regarding the Fast Flow Nozzle's prospective advantages is seen below, now to specifically note potential sources of end-user return on investment via relevant prospective advantages. Note may also be made that depending on the assets being considered as being potentially protected by the Fast Flow Nozzle, ROI may far outweigh the cost of adoption. For instance, if the Fast Flow Nozzle were integrated into backup cooling strategies for a nuclear facility, the benefit of protecting both the facility and the population at large may vastly outweigh the unit and installation costs of the Fast Flow Nozzle. That said, it is understood that ROI may differ significantly from prospective end user to prospective end user, as the specific assets for which the Fast Flow Nozzle may be protecting may fluctuate significantly.

Distribution Statement A: Approved for Public Release; Distribution Unlimited

Table 24: Fast Flow Nozzle Prospective Advantages and Detail	
Prospective Advantage	**Detail**
A fast response in the rupture and flow of fire suppressing material	The goal is <1 millisecond.
The modified nozzle sprays 300-350 GPM compared to the standard 20-25 GPM system.	The nozzle delivers water at fifteen times the efficiency of existing fire suppression systems.
The technology may be retrofitted to fixed pipe systems to provide virtually unlimited extinguishing material in only 10-15 milliseconds.	This cuts response time in half versus standard systems.
The flow rate from one nozzle is sufficient to replace up to six traditional valve heads	Due to the fewer Fast Flow Nozzles which are required versus traditional valve heads, a cost savings may be realized.
Can achieve higher flow rate using existing piping.	Allows for retrofitting of existing systems.
Has passed testing by the Navy at Crane lab	Initial testing and proof of testing may provide foundational research and reduce overall cost associated with additional R&D required to commercialize the nozzle
Has strength and durability to perform in fire situations	This enables the valve to be used in situations where high heat an intensity may reduce performance capabilities of competing nozzles
The nozzle is a high value product with a low lifetime cost.	The overall life cycle cost is believed to be within the range of prospective end users' purchasing capabilities
The portable system prototype is more convenient and affordable than current fire suppression systems.	Performance capabilities significantly enhance existing systems, providing enhanced delivery

Understanding that the issues discussed above may be significant factors in evaluating the potential adoption propensity by various prospective end user groups, the above discussion exists

Distribution Statement A: Approved for Public Release; Distribution Unlimited

while holding price constant. That said, consideration may be given to the potentially competitive cost of the Fast Flow Nozzle against currently commercialized (and employed) suppression systems (particularly due to the nozzle's ability to be retrofitted into existing systems). Potential licensees may work to gain a better understanding of fundamental segment needs and develop marketing strategies that leverage the degree to which the Fast Flow Nozzle may fit those particular needs gaps. Additionally, while the Fast Flow Nozzle may be categorized on the market as a *suppression technology*, a further investigation of consumer perception may serve to develop an understanding of potential market penetration strategies that may differentiate the Fast Flow Nozzle from potential competition. Said another way, if prospective end users develop a side-by-side perceptual comparison of the Fast Flow Nozzle against currently commercialized technologies such as existing deluge suppression systems, initial considerations may be made within the contextual bounds of *suppression* technologies and as such may drive up front observations to that of *price*. If price is the driving factor for suppression technologies, then on a fundamental level, the Fast Flow Nozzle may be priced fairly competitive within the market. However, if prospective Fast Flow Nozzle licensees are able to drive perceptual development of the nozzle within the market place as a technology that is not simply a suppression technology, but something that may offer additional benefits with application extensions other than fire suppression, perhaps price disparities (that may exist if components such as a cost-effective gas generator are unable to be procured) may be justified. Additionally, if the added benefit that the Fast Flow Nozzle may provide to prospective end users is effectively articulated, then any disparity may also be overcome.

Ultimately, understanding that *switching costs* may be a potential barrier to market penetration for technologies such as the Fast Flow Nozzle, developing strategies that aim to mitigate and overcome this and other barriers may serve to enhance the attractiveness of the Fast Flow Nozzle to target markets and may work to assist in the driving of market adoption.

Distribution Statement A: Approved for Public Release; Distribution Unlimited

6 Conclusion

The Fast Flow Nozzle works to enhance fire and explosion containment and suppression capabilities of those prospective end users for which high-flow, fast response fire suppression may be necessitated. Although currently commercialized fire suppression systems may work to mitigate damage caused by high intensity fires or explosions, the Fast Flow Nozzle may offer an alternative suppression system that works to decrease potential destruction by detecting and suppressing fires and explosions faster than currently commercialized systems. The Fast Flow Nozzle then strives to offer the prospective advantages tabulated below:

Table 25: Fast Flow Nozzle Prospective Advantages and Detail

Prospective Advantage	**Detail**
A fast response in the rupture and flow of fire suppressing material	The goal is <1 millisecond.
The modified nozzle sprays 300-350 GPM compared to the standard 20-25 GPM system.	The nozzle delivers water at fifteen times the efficiency of existing fire suppression systems.
The technology may be retrofitted to fixed pipe systems to provide virtually unlimited extinguishing material in only 10-15 milliseconds.	This cuts response time in half versus standard systems.
The flow rate from one nozzle is sufficient to replace up to six traditional valve heads	Due to the fewer Fast Flow Nozzles which are required versus traditional valve heads, a cost savings may be realized.
Can achieve higher flow rate using existing piping.	Allows for retrofitting of existing systems.
Has passed testing by the Navy at Crane lab	Initial testing and proof of testing may provide foundational research and reduce overall cost associated with additional R&D required to commercialize the nozzle
Has strength and durability to perform in fire situations	This enables the valve to be used in situations where high heat an intensity may reduce performance capabilities of competing nozzles

Distribution Statement A: Approved for Public Release; Distribution Unlimited

The nozzle is a high value product with a low lifetime cost.	The overall life cycle cost is believed to be within the range of prospective end users' purchasing capabilities
The portable system prototype is more convenient and affordable than current fire suppression systems.	Performance capabilities significantly enhance existing systems, providing enhanced delivery

Prospective advantages of the Fast Flow Nozzle may constitute a source of product differentiation and competitive advantage. Relative to currently commercialized suppression systems, the Fast Flow Nozzle may serve to enhance the capabilities of prospective end users to suppress or contain explosive blasts or fires resulting in a number of applications. As the Fast Flow Nozzle is further developed and market adoption ensues, articulating the prospective advantages tabulated above and framing them in such a way that aligns with prospective end user purchase parameters, competitive ability may be strengthened.

Existing fire suppression systems have been commercialized and may have a strong hold on the market. As the Fast Flow Nozzle may be retrofitted into existing systems, attractiveness may ultimately hinge on its performance capabilities above that of currently commercialized units. Additionally, while it is yet to be determined whether the Fast Flow Nozzle will initially serve as a complement or substitute to existing fire suppression technologies (whether it will be retrofitted or completely installed with a new unit) within the competitive landscape, the former may be more probable and may ease resistance to entry exerted by the market incumbents

Further, the cost of adoption may be a critical point of consideration for prospective end users, and adoption may be resultant of a cost-benefit analysis where the Fast Flow Nozzle is compared against both existing suppression systems and potential alternatives. As commercialization and penetration strategies are developed, consideration may be given to the cost structures currently in place for suppression technologies for various markets examined. Based on prospective end user groups, pricing considerations may need to take into account purchasing power and/or propensity to purchase.

Based on the data examined, the civilian manufacturing oil and gas production markets may warrant strategic consideration for initial market entry. These two markets appear to have a clear and well defined need for fire suppression technologies in various settings. Understanding that there may exist a clear need for suppression systems, it may appear that technologies that are developed, and which serve to enhance the suppression capabilities for these applications may at the least warrant consideration from said prospective end users. While adoption may rely not only on suppression performance, but also on variables like price and ease of use, these variables should be considered in marketing and communications strategies aimed at increasing awareness

Distribution Statement A: Approved for Public Release; Distribution Unlimited

of the Fast Flow Nozzle, its prospective advantages and the real ROI that it can generate in suppression situations.

Ultimately, the Fast Flow Nozzle appears technologically viable. That said, there appears to be a definite market for suppression technologies like the Fast Flow Nozzle. Adoption may rely heavily on the ability of prospective licensees or partners to work to develop customized, yet cost-effective fire suppression systems using the Fast Flow Nozzle that significantly enhance suppression capabilities. Further, while the Fast Flow Nozzle may provide enhanced fire suppression capabilities to prospective end users, price may be a key factor with regard to marginal enhancements in suppression performance and the incremental cost at which the prospective end users may have to incur to achieve superior performance. That said, commercialization strategies may also work to align potential price points with prospective end user budgetary considerations.

Distribution Statement A: Approved for Public Release; Distribution Unlimited

Appendix A: List of Nuclear Facilities in the United States[96]

U.S. Nuclear Power Plant Operators, Owners and Holding Companies

Reactor Name	Operator	Owner (s)	Holding Company	Owned %	Owned MW
Arkansas Nuclear One 1	Entergy Nuclear South	Entergy Arkansas, Inc.	Entergy Corp.	100.0	842
Arkansas Nuclear One 2	Entergy Nuclear South	Entergy Arkansas, Inc.	Entergy Corp.	100.0	997
Beaver Valley 1	FirstEnergy Nuclear Operating Co.	Pennsylvania Power Co.	FirstEnergy Corp.	65.0	580
Beaver Valley 1	FirstEnergy Nuclear Operating Co.	Ohio Edison Co.	FirstEnergy Corp.	35.0	312
Beaver Valley 2	FirstEnergy Nuclear Operating Co.	Ohio Edison Co.	FirstEnergy Corp.	41.9	354
Beaver Valley 2	FirstEnergy Nuclear Operating Co.	Toledo Edison Co. (The)	FirstEnergy Corp.	24.5	207
Beaver Valley 2	FirstEnergy Nuclear Operating Co.	Cleveland Electric Illuminating Co. (The)	FirstEnergy Corp.	19.9	168
Beaver Valley 2	FirstEnergy Nuclear Operating Co.	Pennsylvania Power Co.	FirstEnergy Corp.	13.7	116
Braidwood 1	Exelon Generation Co, LLC	Exelon Corp.	Exelon Corp.	100.0	1,178
Braidwood 2	Exelon Generation Co, LLC	Exelon Corp.	Exelon Corp.	100.0	1,152
Browns Ferry 1	Tennessee Valley Authority	Tennessee Valley Authority	Tennessee Valley Authority	100.0	1,065
Browns Ferry 2	Tennessee Valley Authority	Tennessee Valley Authority	Tennessee Valley Authority	100.0	1,104
Browns Ferry 3	Tennessee Valley Authority	Tennessee Valley Authority	Tennessee Valley Authority	100.0	1,105
Brunswick 1	Progress Energy	Progress Energy Carolinas	Progress Energy, Inc.	81.7	766
Brunswick 1	Progress Energy	North Carolina Eastern Municipal Power Agency	North Carolina Eastern Municipal Power Agency	18.3	172
Brunswick 2	Progress Energy	Progress Energy Carolinas	Progress Energy, Inc.	81.7	751
Brunswick 2	Progress Energy	North Carolina Eastern Municipal Power Agency	North Carolina Eastern Municipal Power Agency	18.3	169
Byron 1	Exelon Generation Co, LLC	Exelon Corp.	Exelon Corp.	100.0	1,164
Byron 2	Exelon Generation Co, LLC	Exelon Corp.	Exelon Corp.	100.0	1,136
Callaway	AmerenUE	AmerenUE	Ameren Corp.	100.0	1,190
Calvert Cliffs 1	Constellation Generation	Constellation Generation	Constellation Energy Group	100.0	873
Calvert Cliffs 2	Constellation Generation	Constellation Generation	Constellation Energy Group	100.0	862
Catawba 1	Duke Power	North Carolina Electric Membership Corp.	North Carolina Electric Membership Corp.	61.5	694

[96] "U.S. Nuclear Power Plant Operators, Owners and Holding Companies," Nuclear Energy Institute, Web, July 2010, <http://www.nei.org/resourcesandstats/documentlibrary/reliableandaffordableenergy/graphicsandcharts/usnuclearpowerplantownersoperatorsandholdingcompanies/>

Distribution Statement A: Approved for Public Release; Distribution Unlimited

Catawba 1	Duke Power	Duke Energy Corp.	Duke Energy Corp.	38.5	435
Catawba 2	Duke Power	North Carolina Municipal Power Agency No. 1	North Carolina Municipal Power Agency No. 1	75.0	847
Catawba 2	Duke Power	Piedmont Municipal Power Agency	Piedmont Municipal Power Agency	25.0	282
Clinton	Exelon Generation Co, LLC	Exelon Corp.	Exelon Corp.	100.0	1,043
Columbia Generating Station 2	Energy Northwest	Energy Northwest	Energy Northwest	100.0	1,131
Comanche Peak 1	Luminant Generation	Luminant Generation	Luminant Holdco	100.0	1,209
Comanche Peak 2	Luminant Generation	Luminant Generation	Luminant Holdco	100.0	1,158
Cooper	Entergy Nuclear Nebraska	Nebraska Public Power District	Nebraska Public Power District	100.0	770
Crystal River 3	Progress Energy	Progress Energy Florida	Progress Energy, Inc.	91.8	789
Crystal River 3	Progress Energy	Seminole Electric Coop.	Seminole Electric Coop.	1.7	15
Crystal River 3	Progress Energy	Orlando Utilities Commission	Orlando Utilities Commission	1.6	14
Crystal River 3	Progress Energy	Gainesville Regional Utilities	Gainesville Regional Utilities	1.4	12
Crystal River 3	Progress Energy	Ocala FL (City of)	Ocala FL (City of)	1.3	11
Crystal River 3	Progress Energy	Leesburg Electric Dept	Leesburg FL (City of)	0.8	7
Crystal River 3	Progress Energy	Kissimmee Utility Authority	Kissimmee Utility Authority	0.7	6
Crystal River 3	Progress Energy	Utilities Commission New Smyrna Beach	Utilities Commission New Smyrna Beach	0.6	5
Crystal River 3	Progress Energy	Alachua FL (City of)	Alachua FL (City of)	0.1	1
Crystal River 3	Progress Energy	Bushnell FL (City of)	Bushnell FL (City of)	0.0	0
Davis Besse	FirstEnergy Nuclear Operating Co.	Cleveland Electric Illuminating Co. (The)	FirstEnergy Corp.	51.4	452
Davis Besse	FirstEnergy Nuclear Operating Co.	Toledo Edison Co. (The)	FirstEnergy Corp.	48.6	427
Diablo Canyon 1	Pacific Gas & Electric Co.	PG&E Corp.	PG&E Corp.	100.0	1,122
Diablo Canyon 2	Pacific Gas & Electric Co.	PG&E Corp.	PG&E Corp.	100.0	1,118
Donald C. Cook 1	American Electric Power Co. Inc.	American Electric Power Co. Inc.	American Electric Power Co. Inc.	100.0	1,009
Donald C. Cook 2	American Electric Power Co. Inc.	American Electric Power Co. Inc.	American Electric Power Co. Inc.	100.0	1,060
Dresden 2	Exelon Generation Co, LLC	Exelon Corp.	Exelon Corp.	100.0	867
Dresden 3	Exelon Generation Co, LLC	Exelon Corp.	Exelon Corp.	100.0	867
Duane Arnold	NextEra Energy Resources Duane Arnold, LLC	NextEra Energy Resources, LLC	FPL Group	70.0	406
Duane Arnold	NextEra Energy Resources Duane Arnold, LLC	Central Iowa Power Coop.	Central Iowa Power Coop.	20.0	116
Duane Arnold	NextEra Energy Resources Duane Arnold, LLC	Corn Belt Power Coop.	Corn Belt Power Coop.	10.0	58
Edwin I. Hatch 1	Southern Nuclear Operating Co.	Georgia Power Co.	Southern Co.	50.1	439
Edwin I. Hatch 1	Southern Nuclear Operating Co.	Oglethorpe Power Corp.	Oglethorpe Power Corp.	30.0	263
Edwin I. Hatch 1	Southern Nuclear Operating Co.	Municipal Electric Authority of Georgia	Municipal Electric Authority of Georgia	17.7	155
Edwin I. Hatch 1	Southern Nuclear Operating Co.	Dalton GA (City of)	Dalton GA (City of)	2.2	19
Edwin I. Hatch 2	Southern Nuclear Operating Co.	Georgia Power Co.	Southern Co.	50.1	442
Edwin I. Hatch 2	Southern Nuclear Operating Co.	Oglethorpe Power Corp.	Oglethorpe Power Corp.	30.0	265

Distribution Statement A: Approved for Public Release; Distribution Unlimited

Edwin I. Hatch 2	Southern Nuclear Operating Co.	Municipal Electric Authority of Georgia	Municipal Electric Authority of Georgia	17.7	156
Edwin I. Hatch 2	Southern Nuclear Operating Co.	Dalton GA (City of)	Dalton GA (City of)	2.2	19
Fermi 2	Detroit Edison Co (The)	DTE Energy Co.	DTE Energy Co.	100.0	1,122
Fort Calhoun	Omaha Public Power District	Omaha Public Power District	Omaha Public Power District	100.0	482
Ginna	Constellation Generation	Constellation Generation	Constellation Energy Group	100.0	581
Grand Gulf 1	Entergy Nuclear South	System Energy Resources, Inc.	Entergy Corp.	90.0	1,133
Grand Gulf 1	Entergy Nuclear South	South Mississippi Electric Power Association	South Mississippi Electric Power Association	10.0	126
H.B. Robinson 2	Progress Energy	Progress Energy Carolinas	Progress Energy, Inc.	100.0	710
Hope Creek 1	PSEG Nuclear, LLC	PSEG Power	Public Service Enterprise Group, Inc.	100.0	1,161
Indian Point 2	Entergy Nuclear Northeast	Entergy Nuclear Operations, Inc.	Entergy Corp.	100.0	1,025
Indian Point 3	Entergy Nuclear Northeast	Entergy Nuclear Operations, Inc.	Entergy Corp.	100.0	1,040
James A. Fitzpatrick	Entergy Nuclear Northeast	Entergy Nuclear Operations, Inc.	Entergy Corp.	100.0	854
Joseph M. Farley 1	Southern Nuclear Operating Co.	Alabama Power	Southern Co.	100.0	851
Joseph M. Farley 2	Southern Nuclear Operating Co.	Alabama Power	Southern Co.	100.0	860
Kewaunee	Dominion Generation	Dominion Generation	Dominion Resources, Inc.	100.0	556
La Salle 1	Exelon Generation Co, LLC	Exelon Corp.	Exelon Corp.	100.0	1,118
La Salle 2	Exelon Generation Co, LLC	Exelon Corp.	Exelon Corp.	100.0	1,120
Limerick 1	Exelon Generation Co, LLC	Exelon Corp.	Exelon Corp.	100.0	1,130
Limerick 2	Exelon Generation Co, LLC	Exelon Corp.	Exelon Corp.	100.0	1,134
McGuire 1	Duke Power	Duke Energy Corp.	Duke Energy Corp.	100.0	1,100
McGuire 2	Duke Power	Duke Energy Corp.	Duke Energy Corp.	100.0	1,100
Millstone 2	Dominion Generation	Dominion Resources, Inc.	Dominion Resources, Inc.	100.0	877
Millstone 3	Dominion Generation	Dominion Resources, Inc.	Dominion Resources, Inc.	93.5	1,063
Millstone 3	Dominion Generation	Massachusetts Municipal Wholesale Electric Co.	Massachusetts Municipal Wholesale Electric Co.	4.8	55
Millstone 3	Dominion Generation	Central Vermont Public Service Corp.	Central Vermont Public Service Corp.	1.7	20
Monticello	Northern States Power Company	Xcel Energy, Inc.	Xcel Energy, Inc.	100.0	572
Nine Mile Point 1	Constellation Generation	Constellation Generation	Constellation Energy Group	100.0	621
Nine Mile Point 2	Constellation Generation	Constellation Generation	Constellation Energy Group	82.0	937
Nine Mile Point 2	Constellation Generation	Long Island Power Authority	Long Island Power Authority	18.0	206
North Anna 1	Dominion Generation	Virginia Electric & Power Co.	Dominion Resources, Inc.	88.4	798
North Anna 1	Dominion Generation	Old Dominion Electric Coop.	Old Dominion Electric Coop.	11.6	105
North Anna 2	Dominion Generation	Virginia Electric & Power Co.	Dominion Resources, Inc.	88.4	798
North Anna 2	Dominion Generation	Old Dominion Electric Coop.	Old Dominion Electric Coop.	11.6	105
Oconee 1	Duke Power	Duke Energy Corp.	Duke Energy Corp.	100.0	846
Oconee 2	Duke Power	Duke Energy Corp.	Duke Energy Corp.	100.0	846
Oconee 3	Duke Power	Duke Energy Corp.	Duke Energy Corp.	100.0	846
Oyster Creek 1	Exelon Generation Co, LLC	Exelon Corp.	Exelon Corp.	100.0	615

Distribution Statement A: Approved for Public Release; Distribution Unlimited

Palisades	Entergy Nuclear	Entergy Nuclear	Entergy Corp.	100.0	778
Palo Verde 1	Arizona Public Service Co.	Arizona Public Service Co.	Pinnacle West Capital Corp.	29.1	382
Palo Verde 1	Arizona Public Service Co.	Salt River Project	Salt River Project	17.5	229
Palo Verde 1	Arizona Public Service Co.	El Paso Electric Co.	El Paso Electric Co.	15.8	207
Palo Verde 1	Arizona Public Service Co.	Southern California Edison Co.	Edison International	15.8	207
Palo Verde 1	Arizona Public Service Co.	Public Service Co of New Mexico	PNM Resources, Inc.	10.2	134
Palo Verde 1	Arizona Public Service Co.	Southern California Public Power Authority	Southern California Public Power Authority	5.9	77
Palo Verde 1	Arizona Public Service Co.	Los Angeles Dept. of Water & Power	Los Angeles Dept of Water & Power	5.7	75
Palo Verde 2	Arizona Public Service Co.	Arizona Public Service Co.	Pinnacle West Capital Corp.	29.1	382
Palo Verde 2	Arizona Public Service Co.	Salt River Project	Salt River Project	17.5	230
Palo Verde 2	Arizona Public Service Co.	El Paso Electric Co.	El Paso Electric Co.	15.8	208
Palo Verde 2	Arizona Public Service Co.	Southern California Edison Co.	Edison International	15.8	208
Palo Verde 2	Arizona Public Service Co.	Public Service Co of New Mexico	PNM Resources, Inc.	10.2	134
Palo Verde 2	Arizona Public Service Co.	Southern California Public Power Authority	Southern California Public Power Authority	5.9	78
Palo Verde 2	Arizona Public Service Co.	Los Angeles Dept. of Water & Power	Los Angeles Dept of Water & Power	5.7	75
Palo Verde 3	Arizona Public Service Co.	Arizona Public Service Co.	Pinnacle West Capital Corp.	29.1	383
Palo Verde 3	Arizona Public Service Co.	Salt River Project	Salt River Project	17.5	230
Palo Verde 3	Arizona Public Service Co.	El Paso Electric Co.	El Paso Electric Co.	15.8	208
Palo Verde 3	Arizona Public Service Co.	Southern California Edison Co.	Edison International	15.8	208
Palo Verde 3	Arizona Public Service Co.	Public Service Co of New Mexico	PNM Resources, Inc.	10.2	134
Palo Verde 3	Arizona Public Service Co.	Southern California Public Power Authority	Southern California Public Power Authority	5.9	78
Palo Verde 3	Arizona Public Service Co.	Los Angeles Dept. of Water & Power	Los Angeles Dept of Water & Power	5.7	75
Peach Bottom 2	Exelon Generation Co, LLC	Exelon Corp.	Exelon Corp.	50.0	556
Peach Bottom 2	Exelon Generation Co, LLC	PSEG Power	Public Service Enterprise Group, Inc.	50.0	556
Peach Bottom 3	Exelon Generation Co, LLC	Exelon Corp.	Exelon Corp.	50.0	556
Peach Bottom 3	Exelon Generation Co, LLC	PSEG Power	Public Service Enterprise Group, Inc.	50.0	556
Perry 1	FirstEnergy Nuclear Operating Co.	Cleveland Electric Illuminating Co. (The)	FirstEnergy Corp.	44.9	558
Perry 1	FirstEnergy Nuclear Operating Co.	Ohio Edison Co.	FirstEnergy Corp.	30.0	374
Perry 1	FirstEnergy Nuclear Operating Co.	Toledo Edison Co. (The)	FirstEnergy Corp.	19.9	248
Perry 1	FirstEnergy Nuclear Operating Co.	Pennsylvania Power Co.	FirstEnergy Corp.	5.2	65
Pilgrim 1	Entergy Nuclear Northeast	Entergy Nuclear Generation Inc.	Entergy Corp.	100.0	685
Point Beach 1	NextEra Energy Resources Point Beach, LLC	NextEra Energy Resources, LLC	FPL Group	100.0	510
Point Beach 2	NextEra Energy Resources Point Beach, LLC	NextEra Energy Resources, LLC	FPL Group	100.0	516
Prairie Island 1	Northern States Power Company	Xcel Energy, Inc.	Xcel Energy, Inc.	100.0	551
Prairie Island 2	Northern States Power Company	Xcel Energy, Inc.	Xcel Energy, Inc.	100.0	545
Quad Cities 1	Exelon Generation Co, LLC	Exelon Corp.	Exelon Corp.	75.0	650
Quad Cities 1	Exelon Generation Co, LLC	MidAmerican Energy Co.	Berkshire Hathaway, Inc.	25.0	217

Distribution Statement A: Approved for Public Release; Distribution Unlimited

Quad Cities 2	Exelon Generation Co, LLC	Exelon Corp.	Exelon Corp.	75.0	650
Quad Cities 2	Exelon Generation Co, LLC	MidAmerican Energy Co.	Berkshire Hathaway, Inc.	25.0	217
River Bend 1	Entergy Nuclear South	Entergy Gulf States, Inc.	Entergy Corp.	100.0	978
Salem 1	PSEG Nuclear, LLC	PSEG Power	Public Service Enterprise Group, Inc.	57.4	674
Salem 1	PSEG Nuclear, LLC	Exelon Corp.	Exelon Corp.	42.6	500
Salem 2	PSEG Nuclear, LLC	PSEG Power	Public Service Enterprise Group, Inc.	57.4	665
Salem 2	PSEG Nuclear, LLC	Exelon Corp.	Exelon Corp.	42.6	493
San Onofre 2	Southern California Edison Co.	Southern California Edison Co.	Edison International	75.1	803
San Onofre 2	Southern California Edison Co.	San Diego Gas & Electric Co.	Sempra Energy	20.0	214
San Onofre 2	Southern California Edison Co.	Anaheim Public Utilities Dept.	Anaheim CA (City of)	3.2	34
San Onofre 2	Southern California Edison Co.	Riverside Public Utilities	Riverside Public Utilities	1.8	19
San Onofre 3	Southern California Edison Co.	Southern California Edison Co.	Edison International	75.1	811
San Onofre 3	Southern California Edison Co.	San Diego Gas & Electric Co.	Sempra Energy	20.0	216
San Onofre 3	Southern California Edison Co.	Anaheim Public Utilities Dept.	Anaheim CA (City of)	3.2	34
San Onofre 3	Southern California Edison Co.	Riverside Public Utilities	Riverside Public Utilities	1.8	19
Seabrook 1	NextEra Energy Resources Seabrook, LLC	NextEra Energy Resources, LLC	FPL Group	88.2	1,099
Seabrook 1	NextEra Energy Resources Seabrook, LLC	Massachusetts Municipal Wholesale Electric Co.	Massachusetts Municipal Wholesale Electric Co.	11.6	144
Seabrook 1	NextEra Energy Resources Seabrook, LLC	Taunton Municipal Lighting Plant	Taunton Municipal Lighting Plant	0.1	1
Seabrook 1	NextEra Energy Resources Seabrook, LLC	Hudson Light & Power Dept.	Hudson Light & Power Dept.	0.1	1
Sequoyah 1	Tennessee Valley Authority	Tennessee Valley Authority	Tennessee Valley Authority	100.0	1,148
Sequoyah 2	Tennessee Valley Authority	Tennessee Valley Authority	Tennessee Valley Authority	100.0	1,126
Shearon Harris 1	Progress Energy	Progress Energy Carolinas	Progress Energy, Inc.	83.8	754
Shearon Harris 1	Progress Energy	North Carolina Eastern Municipal Power Agency	North Carolina Eastern Municipal Power Agency	16.2	146
South Texas Project 1	STP Nuclear Operating Co.	NRG Energy	NRG Energy, Inc.	44.0	563
South Texas Project 1	STP Nuclear Operating Co.	CPS Energy	CPS Energy	40.0	512
South Texas Project 1	STP Nuclear Operating Co.	Austin Energy	Austin Energy	16.0	205
South Texas Project 2	STP Nuclear Operating Co.	NRG Energy	NRG Energy, Inc.	44.0	563
South Texas Project 2	STP Nuclear Operating Co.	CPS Energy	CPS Energy	40.0	512
South Texas Project 2	STP Nuclear Operating Co.	Austin Energy	Austin Energy	16.0	205
St. Lucie 1	Florida Power & Light Co.	Florida Power & Light Co.	FPL Group	100.0	839
St. Lucie 2	Florida Power & Light Co.	Florida Power & Light Co.	FPL Group	85.1	714
St. Lucie 2	Florida Power & Light Co.	Florida Municipal Power Agency	Florida Municipal Power Agency	8.8	74
St. Lucie 2	Florida Power & Light Co.	Orlando Utilities Commission	Orlando Utilities Commission	6.1	51
Surry 1	Dominion Generation	Dominion Resources, Inc.	Dominion Resources, Inc.	100.0	799
Surry 2	Dominion Generation	Dominion Resources, Inc.	Dominion Resources, Inc.	100.0	799
Susquehanna 1	PPL Susquehanna, LLC	PPL Corp.	PPL Corp.	90.0	1,067
Susquehanna 1	PPL Susquehanna, LLC	Allegheny Electric Coop, Inc.	Allegheny Electric Coop, Inc.	10.0	119

Distribution Statement A: Approved for Public Release; Distribution Unlimited

Susquehanna 2	PPL Susquehanna, LLC	PPL Corp.	PPL Corp.	90.0	1,026
Susquehanna 2	PPL Susquehanna, LLC	Allegheny Electric Coop, Inc.	Allegheny Electric Coop, Inc.	10.0	114
Three Mile Island 1	Exelon Generation Co, LLC	Exelon Corp.	Exelon Corp.	100.0	786
Turkey Point 3	Florida Power & Light Co.	FPL Group	FPL Group	100.0	693
Turkey Point 4	Florida Power & Light Co.	FPL Group	FPL Group	100.0	693
V.C. Summer	South Carolina Electric & Gas Co.	South Carolina Electric & Gas Co.	SCANA Corp.	66.7	644
V.C. Summer	South Carolina Electric & Gas Co.	Santee Cooper	Santee Cooper	33.3	322
Vermont Yankee 1	Entergy Nuclear Vermont Yankee, LLC	Entergy Nuclear Operations, Inc.	Entergy Corp.	100.0	620
Vogtle 1	Southern Nuclear Operating Co.	Georgia Power Co.	Southern Co.	45.7	526
Vogtle 1	Southern Nuclear Operating Co.	Oglethorpe Power Corp.	Oglethorpe Power Corp.	30.0	345
Vogtle 1	Southern Nuclear Operating Co.	Municipal Electric Authority of Georgia	Municipal Electric Authority of Georgia	22.7	261
Vogtle 1	Southern Nuclear Operating Co.	Dalton GA (City of)	Dalton GA (City of)	1.6	18
Vogtle 2	Southern Nuclear Operating Co.	Georgia Power Co.	Southern Co.	45.7	526
Vogtle 2	Southern Nuclear Operating Co.	Oglethorpe Power Corp.	Oglethorpe Power Corp.	30.0	346
Vogtle 2	Southern Nuclear Operating Co.	Municipal Electric Authority of Georgia	Municipal Electric Authority of Georgia	22.7	262
Vogtle 2	Southern Nuclear Operating Co.	Dalton GA (City of)	Dalton GA (City of)	1.6	18
Waterford 3	Entergy Nuclear South	Entergy Louisiana, Inc.	Entergy Corp.	100.0	1,176
Watts Bar 1	Tennessee Valley Authority	Tennessee Valley Authority	Tennessee Valley Authority	100.0	1,123
Wolf Creek 1	Wolf Creek Nuclear Operations Corp.	Kansas City Power & Light Co.	Great Plains Energy, Inc.	47.0	545
Wolf Creek 1	Wolf Creek Nuclear Operations Corp.	Kansas Gas & Electric Co.	Westar Energy, Inc.	47.0	545
Wolf Creek 1	Wolf Creek Nuclear Operations Corp.	Kansas Electric Power Coop.	Kansas Electric Power Coop, Inc.	6.0	70

Updated: 5/10

Owner companies belong to the holding companies.

Distribution Statement A: Approved for Public Release; Distribution Unlimited

Appendix B: Evaluation of Fike® Corporation's Explosion Suppression System for Ultra-High Speed Fire Suppression Applications

AFRL-RX-TY-TR-2008-4516

EVALUATION OF FIKE® CORPORATION'S EXPLOSION SUPPRESSION SYSTEM FOR ULTRA-HIGH SPEED FIRE SUPPRESSION APPLICATIONS

John Hawk, PE
Applied Research Associates
P.O. Box 40128
Tyndall Air Force Base, FL 32403

Virgil J. Carr, Jr.
Air Force Research Laboratory

DECEMBER 2007

Final Report for 1 March 2006 – 31 December 2007

DISTRIBUTION STATEMENT A: Approved for public release; distribution unlimited.

The use of the name or mark of any specific manufacturer, commercial product, commodity, or service in this publication does not imply endorsement by the Air Force.

AIRBASE TECHNOLOGIES DIVISION
MATERIALS AND MANUFACTURING DIRECTORATE
AIR FORCE RESEARCH LABORATORY
AIR FORCE MATERIEL COMMAND
139 BARNES DRIVE, SUITE 2
TYNDALL AIR FORCE BASE, FL 32403-5323

Distribution Statement A: Approved for Public Release; Distribution Unlimited

NOTICE AND SIGNATURE PAGE

Using Government drawings, specifications, or other data included in this document for any purpose other than Government procurement does not in any way obligate the U.S. Government. The fact that the Government formulated or supplied the drawings, specifications, or other data does not license the holder or any other person or corporation; or convey any rights or permission to manufacture, use, or sell any patented invention that may relate to them.

This report was cleared for public release by the Air Force Research Laboratory, Materials and Manufacturing Directorate, Airbase Technologies Division, Public Affairs and is available to the general public, including foreign nationals. Copies may be obtained from the Defense Technical Information Center (DTIC) (http://www.dtic.mil).

REPORT NUMBER AFRL-RX-TY-TR-2008-4516 HAS BEEN REVIEWED AND IS APPROVED FOR PUBLICATION IN ACCORDANCE WITH ASSIGNED DISTRIBUTION STATEMENT.

//signature//
VIRGIL J. CARR, JR.
Work Unit Manager

//signature//
SANDRA R. MEEKER
Chief, Deployed Base Systems Branch

//signature//
ALBERT N. RHODES, Ph.D.
Acting Chief, Airbase Technologies Division

This report is published in the interest of scientific and technical information exchange, and its publication does not constitute the Government's approval or disapproval of its ideas or findings.

Distribution Statement A: Approved for Public Release; Distribution Unlimited

REPORT DOCUMENTATION PAGE	Form Approved OMB No. 0704-0188

The public reporting burden for this collection of information is estimated to average 1 hour per response, including the time for reviewing instructions, searching existing data sources, gathering and maintaining the data needed, and completing and reviewing the collection of information. Send comments regarding this burden estimate or any other aspect of this collection of information, including suggestions for reducing the burden, to Department of Defense, Washington Headquarters Services, Directorate for Information Operations and Reports (0704-0188), 1215 Jefferson Davis Highway, Suite 1204, Arlington, VA 22202-4302. Respondents should be aware that notwithstanding any other provision of law, no person shall be subject to any penalty for failing to comply with a collection of information if it does not display a currently valid OMB control number.
PLEASE DO NOT RETURN YOUR FORM TO THE ABOVE ADDRESS.

1. REPORT DATE (DD-MM-YYYY)	2. REPORT TYPE	3. DATES COVERED (From - To)
15-DEC-2007	Final Technical Report	01-MAR-2006 -- 31-DEC-2007

4. TITLE AND SUBTITLE	5a. CONTRACT NUMBER
Evaluation of Fike® Corporation's Explosion Suppression System For Ultra-High Speed Fire Suppression Applications	FA4819-07-D-0001
	5b. GRANT NUMBER
	5c. PROGRAM ELEMENT NUMBER 62102F
6. AUTHOR(S) Hawk, John; Carr, Virgil J., Jr.	5d. PROJECT NUMBER 4915
	5e. TASK NUMBER D2
	5f. WORK UNIT NUMBER 4915D23B

7. PERFORMING ORGANIZATION NAME(S) AND ADDRESS(ES)	8. PERFORMING ORGANIZATION REPORT NUMBER
Applied Research Associates P.O. Box 40128 Tyndall Air Force Base, FL 32403	
9. SPONSORING/MONITORING AGENCY NAME(S) AND ADDRESS(ES)	10. SPONSOR/MONITOR'S ACRONYM(S) AFRL/RXQD
Air Force Research Laboratory Materials and Manufacturing Directorate 139 Barnes Drive, Suite 2 Tyndall Air Force Base, FL 32403-5323	11. SPONSOR/MONITOR'S REPORT NUMBER(S) AFRL-RX-TY-TR-2008-4516

12. DISTRIBUTION/AVAILABILITY STATEMENT

Distribution Statement A: Approved for public release; distribution unlimited.

13. SUPPLEMENTARY NOTES

Ref AFRL/RXQ Public Affairs Case #08-116. Document contains color images.

14. ABSTRACT

The Air Force Research Laboratory Fire Research Group at Tyndall Air Force Base has a long history of researching ultra high-speed fire extinguishing systems for suppressing fires at munitions facilities. This report documents results of evaluation of Fike Corporation's ultra high-speed explosion protection system when presented with fires from fast burning propellant and pyrotechnic materials. A total of nine tests were conducted using M6 propellant and M206 magnesium-Teflon® pyrotechnic material in amounts ranging from 1/4 lb to 2 lbs. Reaction times were determined using a data acquisition system in conjunction with a high-speed digital camera. The reaction time of Fike® Corporation's system, controller and high rate discharge container, ranged from 2.1 - 2.9 ms, with an average of 2.5 ms.

15. SUBJECT TERMS

ultra-high speed fire suppression, magnesium-teflon fires, propellant fires, fire protection for munitions

16. SECURITY CLASSIFICATION OF:			17. LIMITATION OF ABSTRACT	18. NUMBER OF PAGES	19a. NAME OF RESPONSIBLE PERSON
a. REPORT	b. ABSTRACT	c. THIS PAGE			Virgil J. Carr, Jr.
U	U	U	UU	12	19b. TELEPHONE NUMBER (Include area code)

Reset

Standard Form 298 (Rev. 8/98)
Prescribed by ANSI Std. Z39.18

Distribution Statement A: Approved for Public Release; Distribution Unlimited

Evaluation of Fike® Corporation's Explosion Suppression System for Ultra-High Speed Fire Suppression Applications

John Hawk, P.E.
Applied Research Associates
Tyndall AFB, Florida

Virgil Carr
Air Force Research Laboratory
Materials and Manufacturing Directorate
Airbase Technologies Division
Tyndall AFB, Florida

Abstract

The Air Force Research Laboratory Fire Research Group at Tyndall Air Force Base has a long history of researching ultra high-speed fire extinguishing systems for suppressing fires at munitions facilities. This report documents results of evaluation of Fike® Corporation's ultra-high speed explosion protection system when presented with fires from fast burning propellant and pyrotechnic materials. A total of nine tests were conducted using M6 propellant and M206 magnesium-Teflon® pyrotechnic material in amounts ranging from ¼ lb to 2 lbs. Reaction times were determined using a data acquisition system in conjunction with a high-speed digital camera. The reaction time of Fike® Corporation's system, controller and high rate discharge container, ranged from 2.1–2.9 ms, with an average of 2.5 ms.

Distribution Statement A: Approved for Public Release; Distribution Unlimited

Table of Contents

Abstract i
1 Summary 1
2 Introduction 1
3 Methods, Assumptions, and Procedures 2
4 Results and Discussion 6
5 Conclusions 7
6 References 7

List of Figures

Figure 1. Fike High Rate Discharge Container 2
Figure 2. Fike Dispersion Nozzle 3
Figure 3. Test Equipment Arrangement 4
Figure 4. Container Mounting 4
Figure 5. Control Equipment 4
Figure 6. Maximum Error in Measured Reaction Time at 1000 Frames per Second 5

List of Tables

Table 1. Test Results 6
Table 2. Extinguishment Times 7

Distribution Statement A: Approved for Public Release; Distribution Unlimited

1 Summary

The Air Force Research Laboratory (AFRL) Fire Research Group at Tyndall Air Force Base has endeavored to develop an ultra high-speed fire extinguishing system for suppressing fires at munitions facilities. The Advanced Fire Protection Deluge System (AFPDS) developed by AFRL had a response time of 6–8 ms, including the detector response time, far superior to the 100 ms response time requirement set by National Fire Protection Association (NFPA) Standard 15[1]. The reaction time for the AFPDS controller and high rate discharge container, not including detector reaction time, is just 2–3 ms. AFPDS has been installed at a number of installations, however, two drawbacks to AFPDS are that no single manufacturer makes all the key components of the system, and no commercial fire protection equipment installer can procure, install, and warranty the system. In an effort to offer facilities owners a commercial alternative to AFPDS, the Fire Research Group evaluated Fike® Corporation's ultra-high speed explosion protection system, coupled with a multi-spectrum detector, as a possible alternative to the AFPDS.

Three sizes of high rate discharge (HRD) containers were evaluated: 2.6 gal (10 L), 7.9 gal (30 L), and 13.2 gal (50 L). A Fike power supply and a Fike explosion protection controller were also used. Assessments were done using a multi-spectrum, ultraviolet (UV) and infrared (IR), Fire Sentry™ SS2-AM ultra-high speed flame detector.

A total of nine laboratory trials were conducted using M6 propellant and M206 magnesium-Teflon® (MTV) pyrotechnic material in amounts ranging from ¼ lb to 2 lbs. Samples were burned on a table top 32 in below the nozzles of the HRD containers. Reaction times were determined by using a data acquisition system in conjunction with a high-speed digital camera.

The combined reaction time of the controller and the HRD containers ranged from 2.1–2.9 ms with an average reaction time of 2.5 ms, compared to a reaction time of 2–3 ms for the AFPDS controller and HRD container. The average time to extinguish ¼ lb of M6 propellant was 13 ms, measured from the time that water first exited the nozzle until the flame was extinguished. The average time to extinguish 2 lbs of MTV with the 50L container was 28 ms.

The results of these evaluations demonstrate that Fike Corporation's explosion suppression system is capable of suppressing propellants and fast burning pyrotechnic materials.

2 Introduction

Since 1994, the AFRL Fire Research Group at Tyndall Air Force Base has progressively developed higher speed, more effective fire suppression systems aimed at extinguishing fast advancing fires caused by deflagration of explosives, propellants, and pyrotechnic materials.[2,3,4] NFPA 15 defines ultra-high speed fire protection systems as those with response times of 100 ms or less. AFRL's AFPDS achieved a total system

Distribution Statement A: Approved for Public Release; Distribution Unlimited

response time (defined in National Fire Protection Association [NFPA] Standard 15 to be the time from presentation of an energy source of sufficient intensity to initiate detection until extinguishing agent leaves the extinguisher nozzle) of 6–8 ms, and a reaction time for the controller and HRD alone of 2–3 ms. The AFPDS has been installed at six munitions facilities and one paint manufacturing plant. Individual components of the AFPDS, primarily the extinguisher container and the system controller, have come from different manufacturers in an effort to minimize system response time, and up to the present no single commercial manufacturer of fire suppression equipment has expressed interest in transitioning the AFPDS to commercial production.

In 2006, the AFRL Fire Research Group evaluated Fike® Corporation's ultra-high speed explosion protection system as a possible alternative to the AFPDS. Fike® manufactures all of the components that were used to assemble the test system except for the optical detectors.

The reaction time of Fike's system was evaluated in this study. Nine trials were conducted using Fike® explosion suppression containers, power supply units, and explosion protection controllers. Optical detectors used in these trials were the same multi-spectrum detectors typically installed with the AFPDS. M6 propellant and M206 MTV pyrotechnic material were used as the fire sources.

3 Methods, Assumptions, and Procedures

Five major components make up Fike's HRD containers (Figure 1): the steel vessel, a rupture disk, a dispersion nozzle, a nitrogen fill valve, and a gas cartridge actuator (GCA). The steel vessel is available in seven different volumes. For these experiments, 2.6 gal (10 L), 7.9 gal (30 L), and 13.2 gal (50 L) vessels were used. The containers were filled with 15 lbs, 45 lbs, and 80 lbs of water, respectively, and pressurized to 900±25 psi with nitrogen. The rupture disk is non-fragmenting and held in place by a hold down ring. The dispersion nozzle (Figure 2) bolts to the end of the vessel. The hole pattern in the dispersion nozzle yields a spray coverage angle of about 150°. The 10 L and 30 L HRD use 4 in dispersion nozzles, and the 50 L HRD uses a 6 in dispersion

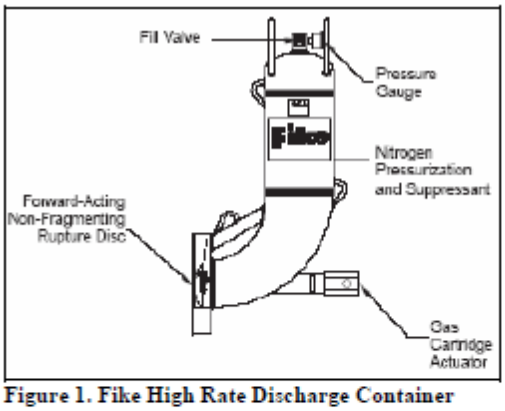

Figure 1. Fike High Rate Discharge Container

Distribution Statement A: Approved for Public Release; Distribution Unlimited

nozzle. The GCA is a thermo-chemical device that is mounted in the HRD in such a manner that it acts directly on the rupture disk when initiated by electrical signal from the system controller. The GCA is classified as a special explosive device by the U.S. Bureau of Alcohol, Tobacco, and Firearms and is exempt from the licensing and storage requirements contained in the Federal explosives regulations. Reference 5 gives additional information about the Fike® explosion suppression system.

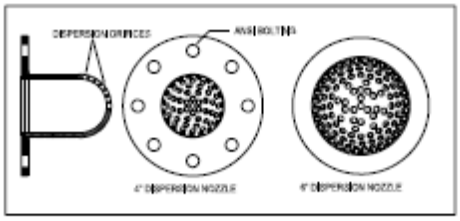

Figure 2. Fike Dispersion Nozzle

A multi-spectrum, ultraviolet (UV) and infrared (IR), Fire Sentry™ SS2-AM ultra-high speed flame detector was used in seven of the nine experiments conducted. This type of detector was chosen because it has been used in previous studies of the AFPDS and was, therefore, the best choice for making direct comparisons between the two ultra-high speed suppression systems. An experimental detector invented here at AFRL was used in the other two experiments, but because of the design of the experimental detector a detection signal could not be measured by the data acquisition system, and therefore a controller reaction time could not be determined for two of the nine trials.

A Hi-Techniques meDAQ data acquisition system was used in conjunction with a Vision Research Phantom v4.2 high-speed digital camera to determine the reaction time of the suppression system. The camera was set outside the blast door entrance to the test room, aimed toward the test table through the polycarbonate window in the door. The meDAQ and the high-speed camera were triggered simultaneously when the device used to ignite the combustible material was activated. Signals to the meDAQ recorded the time when the flame detector sent a signal to the controller and when the controller sent an activation signal to the GCA. The time difference between these two signals is the controller reaction time. The time when water first left the nozzle of the HRD was determined by observing high-speed camera images. Since the data acquisition system and the camera were triggered simultaneously, the reaction time of the HRD, the time from an activation signal at the GCA until water was observed exiting the HRD nozzle, could be determined. The meDAQ was set to a sample rate of 1000 kHz, and the camera shutter speed was set to either 1000 or 2000 frames per second and an exposure time of 300 μs.

M6 propellant and M206 MTV pyrotechnic material were used as the fire sources. The M6 was ignited by a nichrome bridgewire, and the M206 was ignited by electric match. One-quarter pound amounts were used in trials for the 10 L and 30 L containers. One-half pound and two pound amounts were used in the trials for the 50 L containers.

Figures 3 and 4 show the arrangement of the equipment. The Fike® containers were bolted to a mounting bracket that held them in place over the center of the table. The

Distribution Statement A: Approved for Public Release; Distribution Unlimited

mounting bracket itself was attached to one of the concrete walls in the test structure. The distance from the nozzle to the table surface was 32 in. A chain hoist mounted to the ceiling of the test structure was used to lift filled containers into place. The flame detector was mounted to a bracket about level with the nozzle and aimed at the center of the tabletop. The square tabletop was 3 ft on a side and made of steel plate.

Figure 3. Test Equipment Arrangement

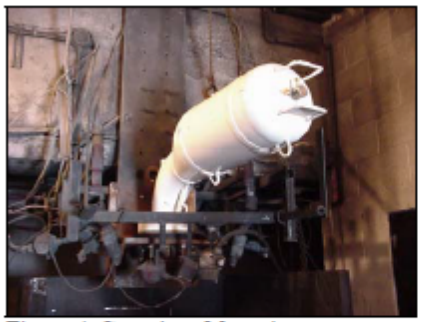

Figure 4. Container Mounting

The system controller, power supply, and associated equipment (Figure 5) were located in an adjacent room separated from the test room by reinforced concrete walls and a blast resistant door. Cables from the flame detectors to the controller and from the controller to the gas cartridge actuator were run through the walls.

Figure 5. Control Equipment

The first step for each trial was to fill the explosion suppression container with the specified amount of water and install the burst disk, nozzle, and GCA. The container was lifted into place and bolted to the mounting bracket. Once bolted in place, the container was pressurized with nitrogen, and then the activation cables were attached to the CGA. All non-essential personnel left the room before the explosive ordnance disposal (EOD) technician entered with the sample material. The EOD technician mounded the material in the center of the table, inserted the igniter, and attached the power supply leads to the igniter. Once the sample material was in place,

Distribution Statement A: Approved for Public Release; Distribution Unlimited

the EOD technician exited the test room and shut the blast door. The high-speed camera was set in place outside the blast door, and the camera and data acquisition system were set to trigger when the switch was closed to apply voltage to the igniter. When all preparations were complete, the explosion suppression control system was energized and placed in automatic. Trials were initiated by applying a voltage to energize the bridge wire igniter or the electric match. After each trial, data from the meDAQ and images from the high-speed camera were saved, an EOD technician gathered up any remaining sample material in the test room, and then the container was unbolted and lowered so it could be serviced.

The data acquisition system was set to sample at a rate of one sample every microsecond (1000 kHz). The high-speed camera was set to capture 1000 frames per second for some trials and 2000 frames per second for others. At these sampling and capture rates, the error due to measurement tolerances from high-speed camera images was about three orders of magnitude greater than that from the data acquisition system. Therefore, any errors introduced by the meDAQ were insignificant compared to those from high-speed digital images. The exposure time at both camera frame-speed settings was 300 µs. These settings were optimum for available light. When set to 1000 frames per second, the high-speed camera captured one frame every millisecond but only the first 300 µs was captured in each frame; the remaining 700 µs was essentially blank time. At 2000 frames per second, each frame consisted of 300 µs of capture time followed by 200 µs of blank time. This means that at 1000 frames per second it is possible that the time measured for an event could be as much as 1.7 ms later than the actual time the event occurred (Figure 6). At 2000 frames per second, the measured time could be up to 700 µs later than the actual event time. Therefore, the times measured from an activation signal reaching the GCA until water was observed exiting the HRD nozzle (container reaction time) represent an upper bound of the actual container reaction time.

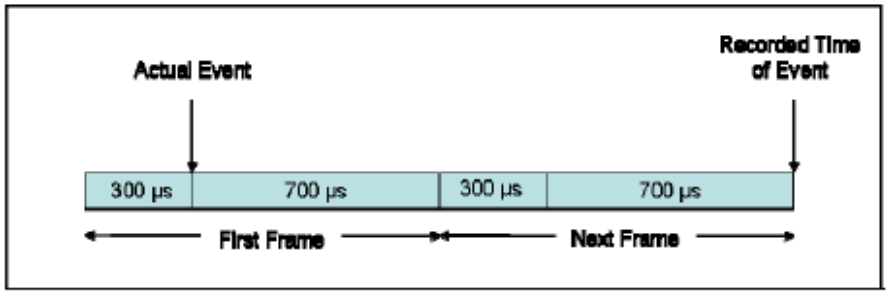

Figure 6. Maximum Error in Measured Reaction Time at 1000 Frames per Second

Distribution Statement A: Approved for Public Release; Distribution Unlimited

4 Results and Discussion

Table 1 is a summary of the results of the nine trials.

Table 1. Test Results

CONTAINER VOLUME (L)	DETECTOR	SAMPLE MATERIAL	CAMERA FRAME SPEED (frames/sec)	CONTROLLER REACTION TIME (ms)	CONTAINER REACTION TIME (ms)*	SPEED OF WATER SPRAY (feet/sec)
10	Fire Sentry	¼ lb M6	1000	0.778	2.1	267
10	Fire Sentry	¼ lb M6	1000	1.21	1.3	222
10	AFRL	¼ lb MTV	2000	**	1.5	242
30	Fire Sentry	¼ lb M6	1000	0.945	2.0	242
30	Fire Sentry	¼ lb M6	1000	1.11	1.7	213
30	Fire Sentry	¼ lb MTV	1000	0.758	1.3	222
50	Fire Sentry	½ lb MTV	2000	0.564	1.6	191
50	AFRL	2 lb MTV	2000	**	1.6	185
50	Fire Sentry	2 lb MTV	2000	1.23	***	***
			AVERAGE	0.942	1.6	
			STANDARD DEVIATION	0.254	0.3	
			MEDIAN	0.945	1.6	

* Time is an upper bound to the actual reaction time. For an explanation, see section 3 above.

** Controller reaction time could not be determined when the AFRL detector was used.

*** Could not determine time water began to exit the container from high-speed imagery.

The total reaction time (controller reaction time plus container reaction time) of Fike® Corporation's explosion suppression system ranged from 2.1–2.9 ms with an average reaction time of 2.5 ms. The AFPDS controller and HRD have a reaction time of 2–3 ms. The speed of the water spray from the Fike® 10 L container averaged 244 ft/s. The speed of the water spray from a 10 L AFPDS container is about 166 ft/s at a container pressure of 500 psi.

Table 2 shows the total time for extinguishing each of the fires. Total time to extinguishment is the time from water first exiting the nozzle until the fire was extinguished. Times were measured from the high-speed digital video records. The average extinguishment time for ¼ lb of M6 propellant was 13 ms, independent of container volume. For MTV, the extinguishment time decreased with increasing container volume, and the average time to extinguish 2 lbs of MTV with the 50L containers was 28 ms.

Distribution Statement A: Approved for Public Release; Distribution Unlimited

Table 2. Extinguishment Times

SAMPLE MATERIAL	CONTAINER VOLUME (L)	TOTAL TIME TO EXINGUISHMENT (ms)
¼ lb M6	10	12
¼ lb M6	10	15
¼ lb M6	30	13
¼ lb M6	30	12.5
¼ lb MTV	10	77
¼ lb MTV	30	27
½ lb MTV	50	18
2 lb MTV	50	22
2 lb MTV	50	34.5

5 Conclusions

Fike's system released extinguishing agent within 2–3 ms of detection and extinguished up to 2 lbs of MTV pyrotechnic material in less than 35 ms. System performance was as good as that of the Advanced Fire Protection Deluge System, developed and installed by AFRL, and it is an order of magnitude faster than the standard set by NFPA 15 for ultra-high speed fire protection systems. Unlike the Advanced Fire Protection Deluge System, all components of Fike's system (except for the flame detectors) are commercially available from a single manufacturer. Designers of future energetic materials facilities and caretakers of existing facilities should use this information to determine whether Fike® Corporation's ultra-high speed explosion protection system could reduce the potential for human injuries, property damage, and process interruptions at their installations.

6 References

[1] Technical Committee on Water Spray Fixed Systems, National Fire Protection Association, *NFPA 15 Standard for Water Spray Fixed Systems for Fire Protection.* 2007 Edition. Kerry M. Bell, chair.

[2] Carr, V. and Cozart, K.S. and Wells, S.P. *Advanced Fire Protection Deluge System Phase 1 Report.* Air Force Research Laboratory Report AFRL-ML-TY-TR-1998-4526. Tyndall AFB, FL. 1998.

[3] Wells, S.P and Carr, V. and Cozart, K.S. *Advanced Fire Protection Deluge System Phase II Report.* Air Force Research Laboratory Report AFRL-ML-TY-TR-2000-4521. Tyndall AFB, FL. 2000.

[4] Dierdorf, Douglas and Hawk, John. *Blast Initiated Deluge System, An Ultra-High-Speed Fire Suppression System.* Air Force Research Laboratory Report AFRL-ML-TY-TR-2006-4511. Tyndall AFB, FL. 2006.

[5] Fike Corporation. Explosion Suppression Systems from Fike. http://www.fike.com/explosion_suppression_products.html

Distribution Statement A: Approved for Public Release; Distribution Unlimited

Appendix C: Blast Initiated Deluge System Assessment-AFRL

AFRL-ML-TY-TP-2006-4511

PREPRINT

BLAST INITIATED DELUGE SYSTEM
An Ultra-High-Speed Fire Suppression System

Douglas Dierdorf, Ph.D.; John Hawk, P.E.

Applied Research Associates
P.O. Box 40128
Tyndall AFB, FL 32403

JANUARY 2006

Approved for public release; distribution unlimited.

This work has been submitted for publication in the Proceedings of the 2006 Fire Suppression & Detection Research Application Symposium, 1-3 February 2006, in Orlando FL. If published, the National Fire Protection Association (NFPA) Research Foundation may assert copyright. If so, the United States has for itself and others acting on its behalf an unlimited, nonexclusive, irrevocable, paid-up, royalty-free worldwide license to use for its purposes.

Air Force Research Laboratory
Materials and Manufacturing Directorate
Airbase Technologies Division
139 Barnes Drive, Suite 2
Tyndall AFB, FL 32403-5323

Distribution Statement A: Approved for Public Release; Distribution Unlimited

NOTICE

Using Government drawings, specifications, or other data included in this document for any purpose other than Government procurement does not in any way obligate the U.S. Government. The fact that the Government formulated or supplied the drawings, specifications, or other data does not license the holder or any other person or corporation; or convey any rights or permission to manufacture, use, or sell any patented invention that may relate to them.

This technical report was reviewed and cleared for public release by the Air Force Research Laboratory Tyndall Site (AFRL/MLQ) Public Affairs Office (PAO) and is releasable to the National Technical Information Service (NTIS). Reference PAO Case Number: AFRL/MLQ-06-001

This report is releasable to the National Technical Information Service (NTIS) where it will be available to the general public, including foreign nationals.

5285 Port Royal Road
Springfield VA 22161
Telephone (703) 487-4650, (703) 487-4639 (TDD for the hearing impaired)
e-mail: orders@ntis.fedworld.gov
http://www.ntis.gov/index.html

This technical report is approved for publication.

/s/
VIRGIL J. CARR
Work Unit Manager

/s/
RICHARD N. VICKERS
Chief, Deployed Base Systems Branch

/s/
JIMMY L. POLLARD, Colonel, USAF
Chief, Airbase Technologies Division

This report is published in the interest of scientific and technical information exchange and its publication does not constitute the Government's approval or disapproval of its ideas or findings.

Distribution Statement A: Approved for Public Release; Distribution Unlimited

REPORT DOCUMENTATION PAGE	Form Approved OMB No. 0704-0188

The public reporting burden for this collection of information is estimated to average 1 hour per response, including the time for reviewing instructions, searching existing data sources, gathering and maintaining the data needed, and completing and reviewing the collection of information. Send comments regarding this burden estimate or any other aspect of this collection of information, including suggestions for reducing the burden, to Department of Defense, Washington Headquarters Services, Directorate for Information Operations and Reports (0704-0188), 1215 Jefferson Davis Highway, Suite 1204, Arlington, VA 22202-4302. Respondents should be aware that notwithstanding any other provision of law, no person shall be subject to any penalty for failing to comply with a collection of information if it does not display a currently valid OMB control number.
PLEASE DO NOT RETURN YOUR FORM TO THE ABOVE ADDRESS.

1. REPORT DATE *(DD-MM-YYYY)*	2. REPORT TYPE	3. DATES COVERED *(From - To)*
13-12-2005	PREPRINT Conference Proceedings	01-01-2005 to 13-12-2005

4. TITLE AND SUBTITLE Blast Initiated Deluge System An Ultra-High-Speed Fire Suppression System	5a. CONTRACT NUMBER F08637-03-C-6006
	5b. GRANT NUMBER
	5c. PROGRAM ELEMENT NUMBER 62102F
6. AUTHOR(S) Douglas Dierdorf, Ph.D.; John Hawk, P.E.	5d. PROJECT NUMBER 4915
	5e. TASK NUMBER D23A
	5f. WORK UNIT NUMBER 4915D23A
7. PERFORMING ORGANIZATION NAME(S) AND ADDRESS(ES) Applied Research Associates P.O. Box 40128 Tyndall AFB, FL 32403	8. PERFORMING ORGANIZATION REPORT NUMBER
9. SPONSORING/MONITORING AGENCY NAME(S) AND ADDRESS(ES) Air Force Research Laboratory Materials and Manufacturing Directorate 139 Barnes Drive, Suite 2 Tyndall AFB, FL 32403-5323	10. SPONSOR/MONITOR'S ACRONYM(S)
	11. SPONSOR/MONITOR'S REPORT NUMBER(S) AFRL-ML-TY-TP-2006-4511

12. DISTRIBUTION/AVAILABILITY STATEMENT
Distribution Statement A. Approved for public release; distribution unlimited.

13. SUPPLEMENTARY NOTES
PREPRINT. Conference paper to be presented at the 2006 Fire Suppression & Detection Research Application Sympoium, 1-3 Feb 2006, Orlando FL.

14. ABSTRACT
In response to incidents at munitions plants that have caused considerable equipment damage, production delays, and personnel injuries, the Air Force Research Laboratory's (AFRL) Fire Research Group at Tyndall Air Force Base has been working to invent a more effective deluge system capable of stopping high velocity fires caused by deflagration of explosives, propellants, and pyrotechnic materials. A detector has been developed that is one hundred times faster than the best detector on the market, and water velocity three times faster than the exiting state of the art system has been achieved. In live fire experiments of up to four pounds of magnesium-Teflon pyrotechnic material, the AFRL deluge system put water on fires 36 inches from the spray head six milliseconds after detection and extinguished the fires in as little as 16 milliseconds. Compared to the NFPA requirement of 100 millisecond response from detection to initiation of water flow, and compared to 26 milliseconds from detection to water on fires for the best current deluge system, AFRL's system offers the possibility of suppressing fires in facilities where ultra-fast burning materials are manufactured or handled.

15. SUBJECT TERMS
high speed fire suppression, high speed deluge system, water spray systems for fire protection

16. SECURITY CLASSIFICATION OF:			17. LIMITATION OF ABSTRACT	18. NUMBER OF PAGES	19a. NAME OF RESPONSIBLE PERSON
a. REPORT	b. ABSTRACT	c. THIS PAGE			Virgil Carr
U	U	U	SAR	16	19b. TELEPHONE NUMBER *(Include area code)* 850-283-3744

Reset

Standard Form 298 (Rev. 8/98)
Prescribed by ANSI Std. Z39.18

Distribution Statement A: Approved for Public Release; Distribution Unlimited

Blast Initiated Deluge System
an Ultra-High-Speed Fire Suppression System

Douglas Dierdorf, Ph.D.
John Hawk, P.E.
Applied Research Associates
Tyndall AFB, Florida

Air Force Research Laboratory
Materials and Manufacturing Directorate
Airbase Technologies Division
Tyndall AFB, Florida

Abstract

In response to incidents at munitions plants that have caused considerable equipment damage, production delays, and personal injuries, the Air Force Research Lab's (AFRL) Fire Research Group at Tyndall Air Force Base has been working to invent a more effective deluge system capable of stopping high velocity fires caused by deflagration of explosives, propellants, and pyrotechnic materials. A detector has been developed that is one hundred times faster than the best detector on the market, and water velocity three times faster than the existing state of the art system has been achieved. In live fire experiments of up to four pounds of magnesium-Teflon pyrotechnic material, the AFRL deluge system put water on fires 36 inches from the spray head six milliseconds after detection and extinguished the fires in as little as 16 milliseconds. Compared to the NFPA requirement of 100 millisecond response from detection to initiation of water flow, and compared to 26 milliseconds from detection to water on fires for the best current deluge system, AFRL's system offers the possibility of suppressing fires in facilities where ultra-fast burning materials are manufactured or handled.

1. Introduction

Losses in government and Department of Defense (DOD) contract facilities engaged in manufacturing, processing, handling, and demilitarization of ordnance containing propellants and pyrotechnic materials amounted to more than $9,500,000 in property damage and loss of seven lives during the period from 1988-1992, not including additional costs from lost production, accident investigations, legal expenses, etc.[1] Many of these facilities require fire protection by ultra high speed fire suppression systems, defined in NFPA 15[1], *Water Spray Fixed Systems for Fire Protection*, as systems with a response time of 100 ms or less from detection of an energy source to water exiting the system nozzle(s). The 100 ms does not include the duration from water exiting the nozzles to water reaching the flame, which can add a significant amount of time to extinguishing a fast progressing fire. For many propellants, pyrotechnic materials, and aerosols, 100 ms is far too slow to prevent catastrophe.

Distribution Statement A: Approved for Public Release; Distribution Unlimited

In 1994 the U.S. Army Defense Ammunition Logistics Activity engaged the DOD Fire Research Group at the Air Force Research Laboratory (AFRL), Tyndall Air Force Base, Florida to design an ultra-high-speed fire suppression system with a faster response for use in ammunition plants. The Advanced Fire Protection Deluge System (AFPDS) was the result of those studies (Figure 1). The AFPDS consisted of 2.5 gal and 8 gal (10 L and 30 L) spherical tanks nearly filled with water and pre-charged with nitrogen to 500 psi, dual band UV/IR or IR/IR flame detectors, a 200-400 gal back-up water tank pressurized to 150 psi, and a controller. The spherical tanks were built to accommodate a very small explosive charge. Upon detection, a signal was sent by the controller to detonate the explosive charge in the spherical tanks and to open solenoid operated valves in the back-up water system. Detonation of the charge caused the internal pressure of the spherical tank to rise to about 1000 psi, forcing open a rupture disk on the tank and allowing water to be expelled through a spray nozzle at near 170 fps. The AFPDS reduced response time to about 8 ms (6 ms detection time and 2 ms initiation time) and put water on a fire 36 inches away from the spherical tanks in 18 ms. Close behind, back-up water reached the fire in about 130 ms. In 100 trials using ¼ to ½ pound samples of various pyrotechnic materials, most fires were extinguished by the initial water from the spherical tanks, and the back-up water was redundant.[3]

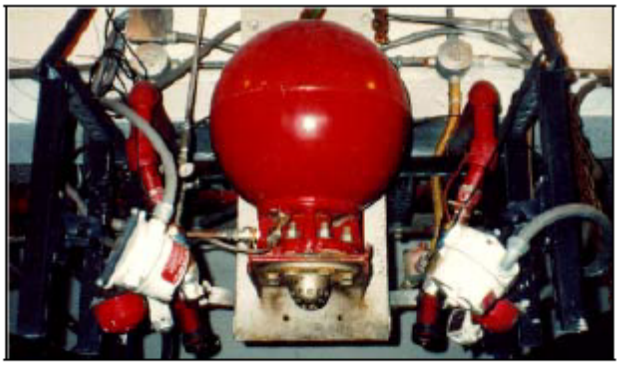

Figure 1.Advanced Fire Protection Deluge System (AFPDS)

Effective as the AFPDS was on most pyrotechnic materials, it was not fast enough to stop fires from the fastest burning materials, epitomized by MJU 32/38 magnesium-Teflon pyrotechnic flare material, so the Fire Research Group set out to improve on the AFPDS. A new photo-transistor-circuit flame detector was developed that cut detection time from 3-5 ms to less than 1 ms and was made less false alarm prone by using a mask that limited the field of view of the detector. Also, a new deluge system (Figure 2), the blast initiated deluge system (BIDS), was developed that could discharge water at near 500 fps. The heart of the BIDS consisted of a steel cone set inside a 16 gal steel cylinder. Filled with water, about 4 gal of water resided inside the cone and the other 12 gal on the outside. There was a small explosive charge fixed at the apex of the cone. Upon detection of a fire, the controller sent an electrical signal to the explosive detonator. Detonation of the charge caused a rapid rise in pressure inside the cone that forced the initial 4 gal of water out a plastic burst disk and on to the fire. Holes in the side of the cone allowed the 12 gal of follow-on water to flow through the cone and on to the fire. The BIDS reduced time from detection to water on the fire to 7-8 ms as compared to about 20 ms for the AFPDS and 130 ms or longer for solenoid activated systems. The BIDS extinguished 1 lb samples of MJU 32/38 in an average of 15 ms, and limited heat flux to a level

Distribution Statement A: Approved for Public Release; Distribution Unlimited

significantly below the maximum allowed by Military Standard 398 (MIL-STD-398)[4] even though the heat flux from an unsuppressed burn far exceeded those limits (Figure 3).

Though successful at suppressing even fast burning MJU 32/38 flare mixture, the Fire Research Group engineers were not completely satisfied with the narrow spray pattern produced by the BIDS, and they desired a system with more direct and follow-on water. A second generation BIDS was designed, built, and tested. Results of experiments for this second generation system are the primary focus of this paper.

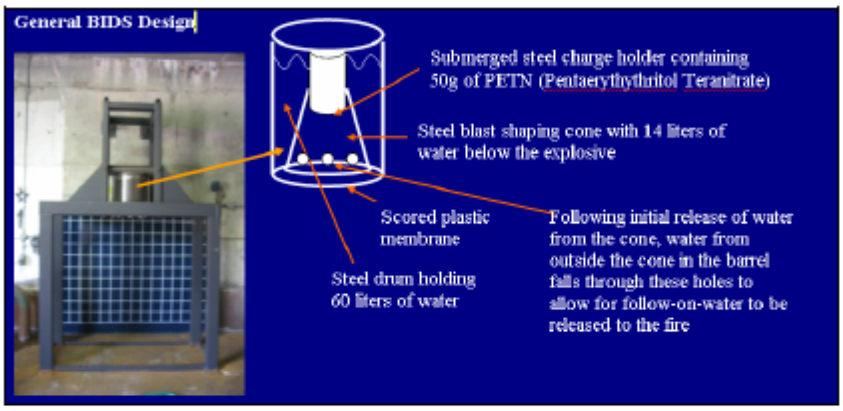

Figure 2. First Generation Blast Initiated Deluge System (BIDS) Test Platform.

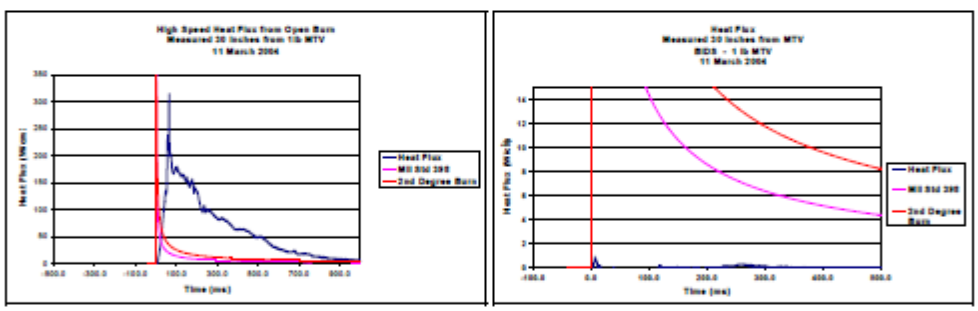

Figure 3. Heat Flux Measured for Unsuppressed *(left)* and Suppressed *(right)* Burns of 1 lb of MJU 32/38 Flare Material.

2. Methods, Assumptions, and Procedures

To solve the narrow spray pattern problem, the spray cone was made bigger around at the base and shorter in height. The volume under the cone was increased from 4 to 4 ½ gal, and the total volume of the cylinder was increased from 16 to 20 gal (Figure 4). Instead of a flat seating surface at the apex of the cone where the explosive charge was mounted, a rounded surface was made to better match the angle of the cone and

Distribution Statement A: Approved for Public Release; Distribution Unlimited

better distribute blast pressure. Explosive tiles were specially made to fit the rounded mounting surface (Figure 5). The tiles were a mixture of 50 g of explosive and Styrofoam. The Styrofoam was used to dilute the explosive, spreading the explosive over a larger volume, and to facilitate long term immersion of the explosive in water. Two different sizes of tiles were made, both having the same amount of explosive material but with different amounts of Styrofoam. A larger Styrofoam to explosive ratio would distribute the explosive more thinly and cause a longer duration explosion with a lower peak pressure as compared to the tiles with less Styrofoam. A larger test frame was constructed to increase the area of the table surface where the samples were placed, and heavier structural components were used so that the frame could be used repeatedly with little structural deformation from the reaction force of the blast (Figure 6).

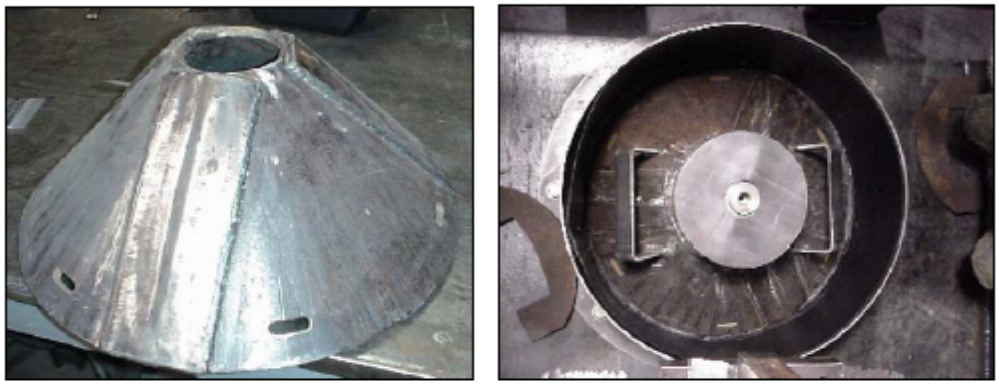

Figure 4. BIDS Cone *(left)*. Cone Mounted in the Cylindrical Water Tank *(right)*.

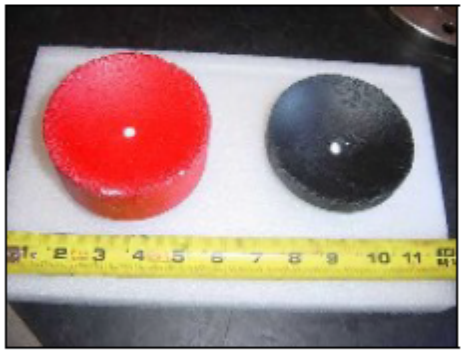

Figure 5. Dilute Explosive Tiles.

Figure 6. BIDS Test Platform

Distribution Statement A: Approved for Public Release; Distribution Unlimited

A cylindrical liner of 80 mil high density polyethylene (HDPE) was made to fit inside the steel cylinder (Figure 7). The liner had an open top, and the bottom was scored to create pie shaped sections so that when the bottom burst under pressure from the explosion it would open along the scored lines rather than being blown out in irregularly shaped pieces.

Figure 7. HDPE Cylindrical Liner Inserted in the Water Tank.

For experimental trials that required the use of flame detectors, three AFRL Fire Research Group photo-transistor detectors were used. Mounted at different locations around the test sample table, they all were aimed toward the center of the table where the pyrotechnic material was placed. The detectors were wired in parallel so that any single detector could initiate a response.

Two high speed cameras set to a frame speed of 3000 frames per second were used simultaneously to capture video of the experiments. The cameras were located on axes 90° apart so that views of the side and of the front of the test frame could be photographed. Videos from the cameras were used to determine when a detectable fire event began (onset of fire), response time of the BIDS, velocity and shape of the water spray, and duration from detectable event to fire extinguished. Use of two cameras not only gave two different views of the event, it also provided two data sets to compare for each experiment.

One, in some cases two, piezoelectric pressure transducers were used to measure incident pressure caused by the detonation of the BIDS explosive charge, or from rapid combustion of the pyrotechnic material. Set at a height above floor of 65 inches in accordance with MIL-STD-398, the sensors measured pressure at distances of 48 and 72 in from the center of the sample table. For some of the experiments a heat flux/temperature sensor was used, however it was determined afterward that the amplifier was not properly calibrated, and the recorded measurements were suspect.

Six experiments were conducted. Two were done primarily to determine the speed and shape of the water spray. One experiment was done to observe and record the automatic system response to a burn of 1 lb of MJU 32/38 magnesium-Teflon pyrotechnic flare material. One experiment was done to observe and record the automatic system response to a burn of 4 lbs of MJU 32/38 magnesium-Teflon pyrotechnic flare material, and one additional trial was done to record the unsuppressed characteristics of a burn of 4 lbs of the flare material for comparison. Finally, one experiment was done to determine the dynamic pressure distribution of the spray (dynamic pressure is a measure of the force exerted when the water impacts the table top).

The first two trials of the redesigned BIDS were done primarily to determine the water velocity and spray pattern of the system, and to measure incident pressure from the detonation. They also allowed comparison between the two different dilute explosive tiles

Distribution Statement A: Approved for Public Release; Distribution Unlimited

and revealed the effect of recoil on the test frame. Flame detectors were not used in these initial experiments, and no combustible material was involved. Detonation of the BIDS charge was done remotely by a manual switch in a firing circuit. The high speed cameras and the data acquisition system used to record incident pressure were triggered from the same firing circuit.

For the first test of the automatic response of the BIDS to an actual fire, 1 lb of flare material was mounded in the center of the table directly beneath the 20 gal water tank. The distance from the tank to the table top was 36 inches. The flare material was ignited by an electric match, similar to an igniter for a solid propellant model hobby rocket, which received its signal through a manual switch in a firing circuit. The cameras and data acquisition system were triggered from the same circuit that initiated the signal to the electric match. The explosive tile with the higher density of explosive was used in the BIDS. The three phototransistor flame detectors were positioned at three different locations above the table 49 in, 52 in, and 55 in from the mound of flare material, and a single pressure gauge was positioned 48 in from the material. Signals from the detectors went to a Pyrotech International RAM/LAM (response acceleration module/low-cost acceleration module) controller. On receipt of a detection signal from the flame detectors the controller sent a triggering signal to a detonator that in turn initiated detonation of the explosive tile in the BIDS spray cone. The sequence of events was as follows:

- The electric match was ignited by a remotely initiated manual switch, which also triggered the high-speed cameras and data acquisition system.
- The flare material ignited.
- When the intensity of the burning material reached the threshold of detection, one or all flame detectors sent a signal to the controller.
- Upon receipt of a detection signal the controller sent a signal to initiate a detonator inserted into the explosive tile in the spray cone.
- The explosive tile detonated and caused a rapid rise in pressure under the spray cone.
- High pressure forced the bottom of the HDPE tank liner to open, and water was directed at the burning material.
- As the water under the cone was expelled, the remaining water in the tank on the outside of the cone was drawn through holes in the side of the cone and on to the burning material.

In the second test of the automatic response of the BIDS to an actual fire, 4 lbs of MJU 32/38 were used. This experiment was designed to reveal the effective suppression diameter of the BIDS and to determine whether the system could suppress larger amounts of pyrotechnic material. The equipment, procedures, and sequence of events were similar to those described above for the experiment with 1 lb of MJU 32/38. The flare material was arranged on the table top in four separate 1 lb piles located around the table at distances of 6 in, 12 in, 18 in, and 24 in from the center of the table. To create a worst case scenario, the four separate mounds were ignited simultaneously and independently by four electric matches. An explosive tile with the lower density of explosive was used. A second pressure detector was added at a distance of 72 in from the center of the table.

Distribution Statement A: Approved for Public Release; Distribution Unlimited

For comparison, a second experiment was done with the BIDS deactivated to record the characteristics of an unsuppressed burn.

The final trial was similar to the first two trials in that no combustible material was used, and the BIDS was initiated manually by a remote switch. The purpose of this trial was to measure the dynamic pressure distribution of the water spray. The explosive tile used was one with the higher explosive material density. PressurEx® pressure sensitive film was used to record pressure. The pressure range of the film was 70-350 psi. The film was cut and pieced into a 45 in square, then encased in a thin laminate to prevent the film from getting wet. The square of film was laid flat on the table top with one edge of the square directly below the center of the water tank such that only half of the spray pattern would be measured. Two pressure gauges positioned 48 in and 72 in from the center of the table were used to record incident pressure.

3. Results and Discussion

Water spray velocity was 500 fps for the explosive tiles with the higher density of explosive material and 420 fps for the lower density tiles. Water traveled the 36 in to the sample table top in 6 ms for the higher density tile and in 7 ms for the lower density tile. Maximum incident pressure caused by the higher density tiles was 0.7 psi at 48 in, and for the lower density explosive tiles the maximum incident pressure was 0.6 psi at 48 in. In the 36 inches of travel from the bottom of the spray cone to the table top the diameter of the spray spread from an initial diameter of 20 in to a diameter of 66 in at the table top, and had a very uniform shape (Figure 8).

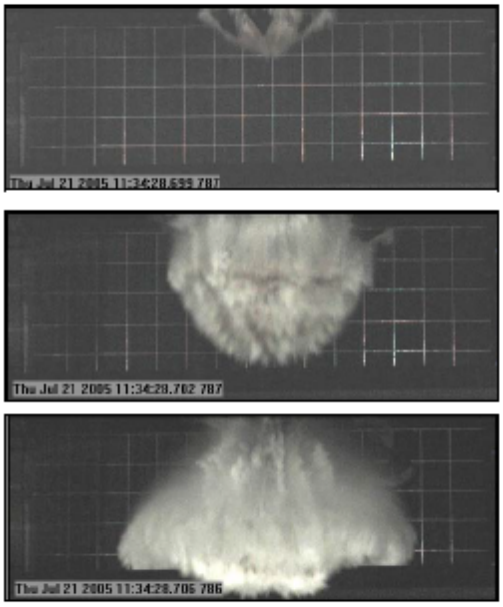

Figure 8. Captured High-Speed Video Frames Showing the Spray Shape. *(Grid lines in the background are 6 in apart.)*

Operated in automatic with an actual burn of 1 lb of MJU 32/38 flare material, the system detected a flame and initiated response 1.3 ms after the first sign of flame. From the time that the pyrotechnic material started to burn, it took just 7.3 ms for the system to respond and put water on the burning material and just 16 ms to extinguish the fire (Sixteen ms is about the amount of time it takes a hummingbird to complete two strokes of its wings). Figure 9 shows captured high speed video frames from the experiment with 1 lb of flare material. The first frame shows the start of the fire, and this frame was used as the time-zero reference frame. The second frame shows water leaving the BIDS. The third frame shows water on the fire. The elapsed time between frames one and three was 7.33 ms.

Distribution Statement A: Approved for Public Release; Distribution Unlimited

Figure 10 shows incident pressure measured 48 in from the flare material for both unsuppressed and suppressed burns of 1 lb of material. Maximum incident pressure was reduced from 10.6 psi to 1.1 psi. For reference, onset of eardrum damage in humans occurs at about 5 psi.

Figure 9. Captured High-Speed Video Frames from Test Burn of 1 lb Mag-Teflon Flare Material at Times 0, +3.3, and +7.3 ms.

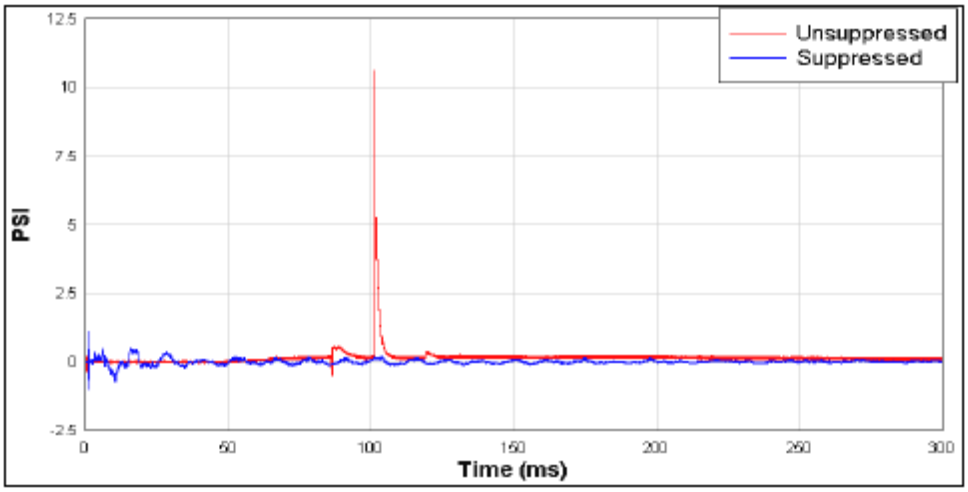

Figure 10. Incident Pressure Comparison at 48 in for 1 lb MJU 32/38 Flare Material.

Distribution Statement A: Approved for Public Release; Distribution Unlimited

In the case of the four 1 lb piles located at varying distances from the center of the table, the system detected a flame and initiated response 1.3 ms after the first sign of flame. It took just 5.9 ms for the system to respond and put water on the burning material, and the fire was extinguished in 42 ms. On average, it takes a human about 250 ms to blink his eyes. To put this in perspective, if you had been observing the experiment from a distance of 50 feet, the fire would have been detected and extinguished before you would have heard the bang from the BIDS firing (assuming dry air at 68°F, for which the speed of sound is 1.126 ft/ms), or you might have missed the event entirely if you happened to blink your eyes. Figure 11 shows captured high-speed video frames from both the unsuppressed and suppressed burns of 4 lbs of flare material. In both cases, the frames correspond to 0, 5.3, and 33 ms after ignition of the material.

In the unsuppressed burn, the pressure detector positioned 48 in from the center of the sample table was destroyed before any useful measurement could be made. In the suppressed burn, incident pressure at 48 in was 1.5 psi. The gauges at 72 in were unharmed in both experiments. Maximum incident pressure measured 72 in from the center of the sample table was 8.4 psi for the unsuppressed and 0.5 psi for the suppressed burn. Extrapolated to 48 in, the unsuppressed pressure would be about 25 psi. The maximum incident pressure allowed by MIL-STD-398 is 2.3 psi measured 65 in above the floor and at the closest point of approach expected for the head and face of someone working in the vicinity. Figure 12 is a graph showing the comparison of incident pressure time histories measured 72 in from the center of the table top for the unsuppressed and suppressed experiments with 4 lbs of MJU 32/38.

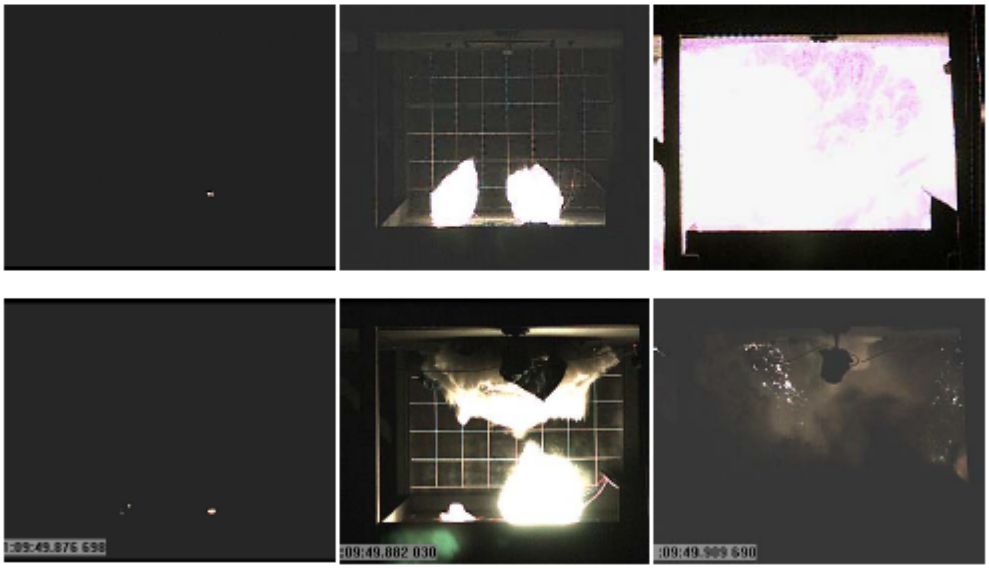

Figure 11. Unsuppressed *(top)* and Suppressed *(bottom)* Burns of 4 lbs of MJU 32/38 at Times 0, +5.3, and +33 ms.

Distribution Statement A: Approved for Public Release; Distribution Unlimited

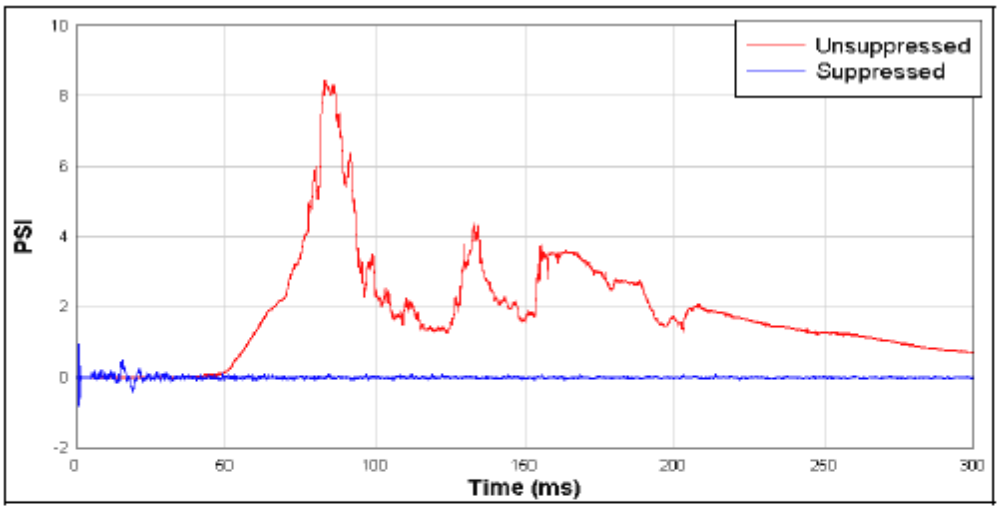

Figure 12. Incident Pressure Comparison at 72 in for Suppressed and Unsuppressed Burns of 4 lbs MJU 32/38 Flare Material.

The last experiment, using pressure sensitive paper, showed that the water spray reached a maximum dynamic pressure of about 300 psi. It also showed characteristics of the spray pattern not evident from high-speed video. Figure 13 is a color contour map of the pressure distribution. Pressure was measured only in one semi-circle because of the symmetry of the spray. Note from Figure 13 that the pressure distribution had a pattern that looked much like a spoked wheel with a radius of 21 in and eight spokes radiating from a central hub. The eight spokes correspond to the score lines that divided the bottom of the HDPE container into eight triangular shaped sections. When the bottom of the container opened, some of the triangular sections tore away from the sides of the container while other sections stayed attached and simply hinged outward. The triangular section at the far left in the figure does not have a distinct outer band of high pressure as do the other three sections, probably because it corresponded to a triangle that stayed attached while the other three sections tore away from the container. The velocity of the water spray as determined from high-speed video was 500 fps. Coupled with dynamic pressure measured on the pressure sensitive film, density of the spray can be calculated if the assumption is made that water velocity everywhere near the leading edge of the spray was the same. With that assumption, the areas where dynamic pressure was 300 psi had a corresponding water spray density of 11 lb/ft^3, compared to a density of about 62.5 lb/ft^3 for water at the same temperature. Areas where the dynamic pressure was 70 psi had a corresponding spray density of 2.6 lb/ft^3.

Distribution Statement A: Approved for Public Release; Distribution Unlimited

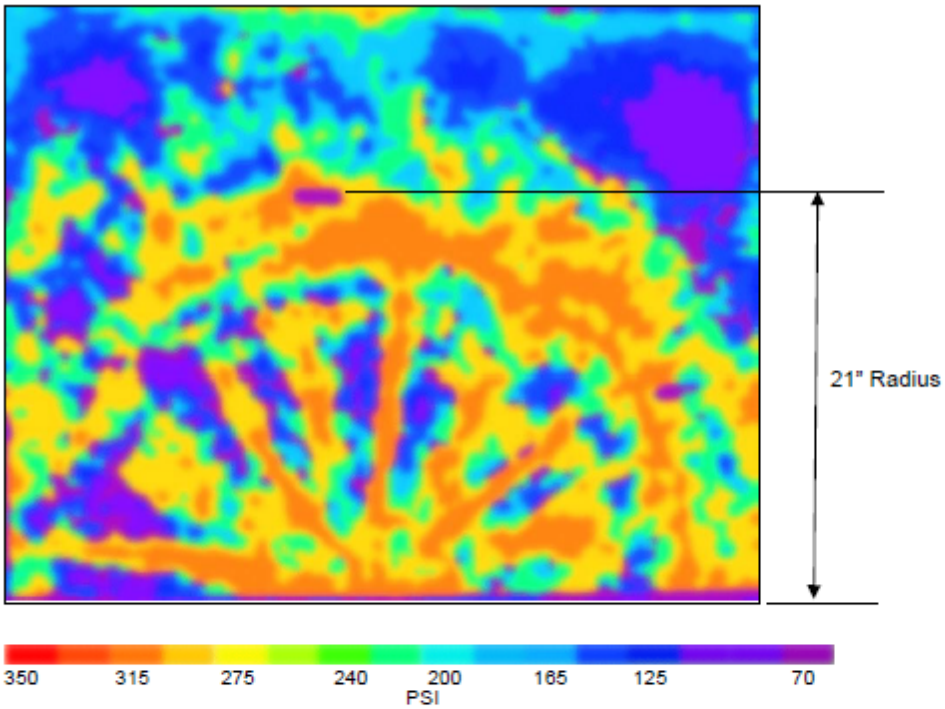

Figure 13. Color Contour Map of Pressure Distribution of One-Half of the BIDS Spray Pattern.

4. Conclusions

The BIDS ultra-high-speed fire suppression system is a promising start toward developing a system capable of protecting automated processes involving propellants and pyrotechnics. BIDS might also provide fire protection while processing high explosives. The second generation BIDS responded to fire from a highly energetic pyrotechnic material and suppressed the fire in 16 ms, comparable to the original BIDS but with greater volumes of initial and follow-on water and a wider and more dispersed spray pattern that were achieved without sacrificing velocity. The BIDS can suppress up to four pounds of pyrotechnic material spread over a four foot diameter while keeping incident pressure below the limits specified in MIL-STD-398. Reliable heat flux and temperature measurements have not yet been taken, but it is very likely that the redesigned BIDS performs at least as well as the original system at limiting heat flux and temperature to well below the limits specified in MIL-STD-398. The BIDS responds faster and puts water on the fire quicker than any existing ultra-high-speed suppression system in use. It is ideally suited to any application where propellants, pyrotechnics, or any other fast burning materials are processed.

The BIDS is limited to use in automated processes: processes done primarily by machine with little human intervention. This is a consequence of one of the most important characteristics of the BIDS, the speed at which water is propelled toward the fire.

Distribution Statement A: Approved for Public Release; Distribution Unlimited

The difference in speed between the AFPDS and the BIDS is 250 fps and makes a difference of 12 ms getting water on a fire 36 in from the spray head. Figure 14 illustrates this point. The top frame is a picture of the flame size 5.9 ms after initiation of the flare material, the time when water from the BIDS would be just reaching the flame. The bottom frame is a picture of the flame 12 ms later, about the time that water from the AFPDS or other similar systems would reach the flame. The difference is dramatic, and it is likely that the fire could not be suppressed once it had progressed to the point captured in the picture on the right. The consequence is at 420 fps the force of the water per square inch is near 200 psi, enough to cause personal injury to anyone who might have an arm in the path of water discharged from the BIDS. Increasing the volume of water under the spray cone, or reducing the weight of the explosive charge, or a combination of both could be done to slow the water spray and subsequently lower the force of the spray, but doing so would defeat one of the distinct advantages of the BIDS. For this reason the BIDS would be appropriate only in automated processes and in situations where people would not be exposed to the direct path of the water spray. Still, that accounts for a large number of the steps in manufacturing, handling, storing, and processing of propellants, pyrotechnics, and other fast burning materials.

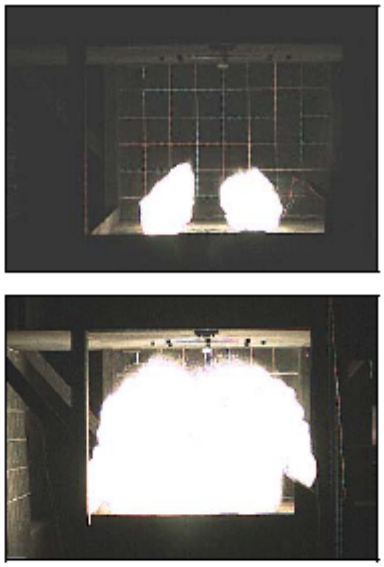

Figure 14 .Comparison of Flame Size 12 ms Apart

5. Recommendations

Research will continue at the DOD Fire Research labs at Tyndall AFB. We would like to find a better container than the current HDPE container being used, one that does not allow sections of the bottom to separate when the BIDS fires and throw pieces of HDPE in the vicinity of the fire, and one that does not contribute to forming areas of high density in the spray that result in excessive dynamic pressure. Experiments with larger amounts of pyrotechnic material in configurations like those found in manufacturing facilities need to be done to determine an upper limit to the system's capabilities, and experiments need to be done for high explosives in layers thinner than their failure depths that burn rather than detonate and mimic conditions found in many automated processes at munitions facilities. More work is needed on the high speed flame detectors used with the BIDS. Experiments to determine their response to a variety of burning materials must be done, false alarm susceptibility must be determined, and if necessary, design changes must be made to enhance the performance of the detectors without sacrificing speed of detection. Finally, an industry partner must be found that can manufacture these systems for commercial sale.

Distribution Statement A: Approved for Public Release; Distribution Unlimited

6. References

1. Loyd, Robert A., Evaluation of Ultra_high-Speed Fire Protection Systems Presently in Service at Army Ammunition Plants, U.S. Army Armament, Munitions, and Chemical Command Safety Office, Department of Defense Explosives Safety Seminar, August 1994.

2. NFPA 15: Standard for Water Spray Fixed Systems for Fire Protection, National Fire Codes, National Fire Protection Association, 2001 Edition.

3. Carr, V., Cozart, K.S., and Wells, S.P., Advanced Fire Protection Deluge System Phase I Report, U.S. Army Defense Ammunition Logistics Activity, AFRL-ML-TY-TR-1998-4526, July 1998.

4. MIL-STD-398, Shields, Operational for Ammunition Operations, Criteria for Design of and Tests for Acceptance, Department of Defense, November 1976.

Distribution Statement A: Approved for Public Release; Distribution Unlimited