US008149390B2

(12) **United States Patent**
Brown

(10) **Patent No.: US 8,149,390 B2**
(45) **Date of Patent: Apr. 3, 2012**

(54) **USER INTERFACE FOR LASER TARGETING SYSTEM**

(75) Inventor: **Jerry G. Brown**, Bloomington, IN (US)

(73) Assignee: **The United States of America as represented by the Secretary of the Navy**, Washington, DC (US)

(*) Notice: Subject to any disclaimer, the term of this patent is extended or adjusted under 35 U.S.C. 154(b) by 518 days.

(21) Appl. No.: **12/414,764**

(22) Filed: **Mar. 31, 2009**

(65) **Prior Publication Data**

US 2010/0251148 A1 Sep. 30, 2010

(51) **Int. Cl.**
G01C 3/08 (2006.01)

(52) **U.S. Cl.** **356/4.02**; 356/3.01; 356/3.1; 356/4.01; 356/4.1; 356/5.01

(58) **Field of Classification Search** 356/3.01–28.5
See application file for complete search history.

(56) **References Cited**

U.S. PATENT DOCUMENTS

5,282,014	A	1/1994	Ruhl et al.	
5,623,335	A	4/1997	Bamberger	
5,898,484	A	4/1999	Harris	
6,445,444	B2	9/2002	Dunne	
6,711,352	B2	3/2004	Kohno et al.	
6,934,012	B2 *	8/2005	Inaba et al.	356/5.03
7,215,430	B2	5/2007	Kacyra et al.	
7,414,707	B2	8/2008	LaBelle et al.	
2004/0046953	A1	3/2004	Nagata et al.	
2005/0099637	A1	5/2005	Kacyra et al.	
2007/0194170	A1	8/2007	Ellison et al.	
2008/0018890	A1	1/2008	Maity et al.	
2009/0310130	A1	12/2009	Norman	

FOREIGN PATENT DOCUMENTS

JP	09-068414	3/1997
RU	2 247 321	1/2005

OTHER PUBLICATIONS

Juyal et al., "Design of a High Performance Laser Range Finder," Jul. 2001, pp. 1-146-147, Instruments Research and Development Establishment, Deharadum, India.

* cited by examiner

Primary Examiner — Thomas Tarcza
Assistant Examiner — Luke Ratcliffe
(74) *Attorney, Agent, or Firm* — Christopher A. Monsey

(57) **ABSTRACT**

A simulation system for predicting a likelihood of whether a target object positioned in an environment will be detected by a detection system when illuminated by a laser source. The simulation system may be used for a laser rangefinder application and a laser designator application. The simulation system may provide a detection probability of the target object at a specified range to the detection system or a plurality of detection probabilities as a function of the range to the detection system. The simulation system may provide an indication of an overlap of the beam provided by the laser source on the target object. The simulation system may determine the effect of vibration on the detection of the target object at a specified range.

13 Claims, 26 Drawing Sheets

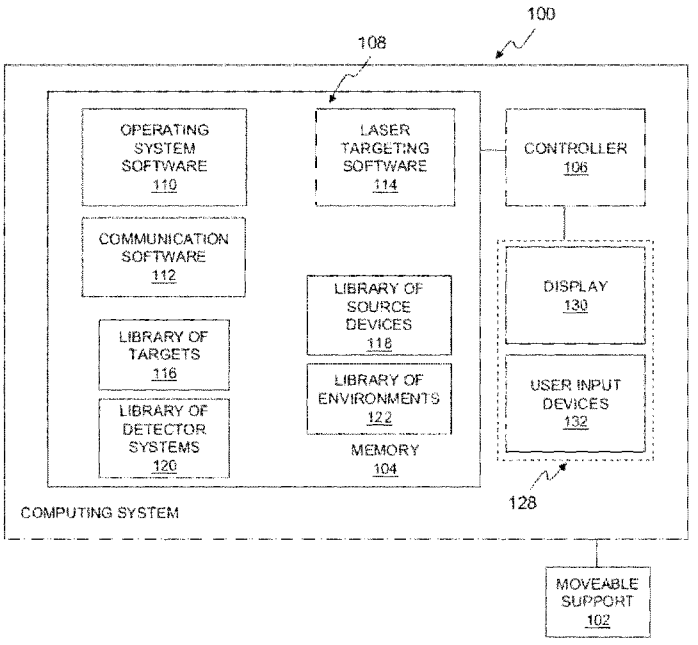

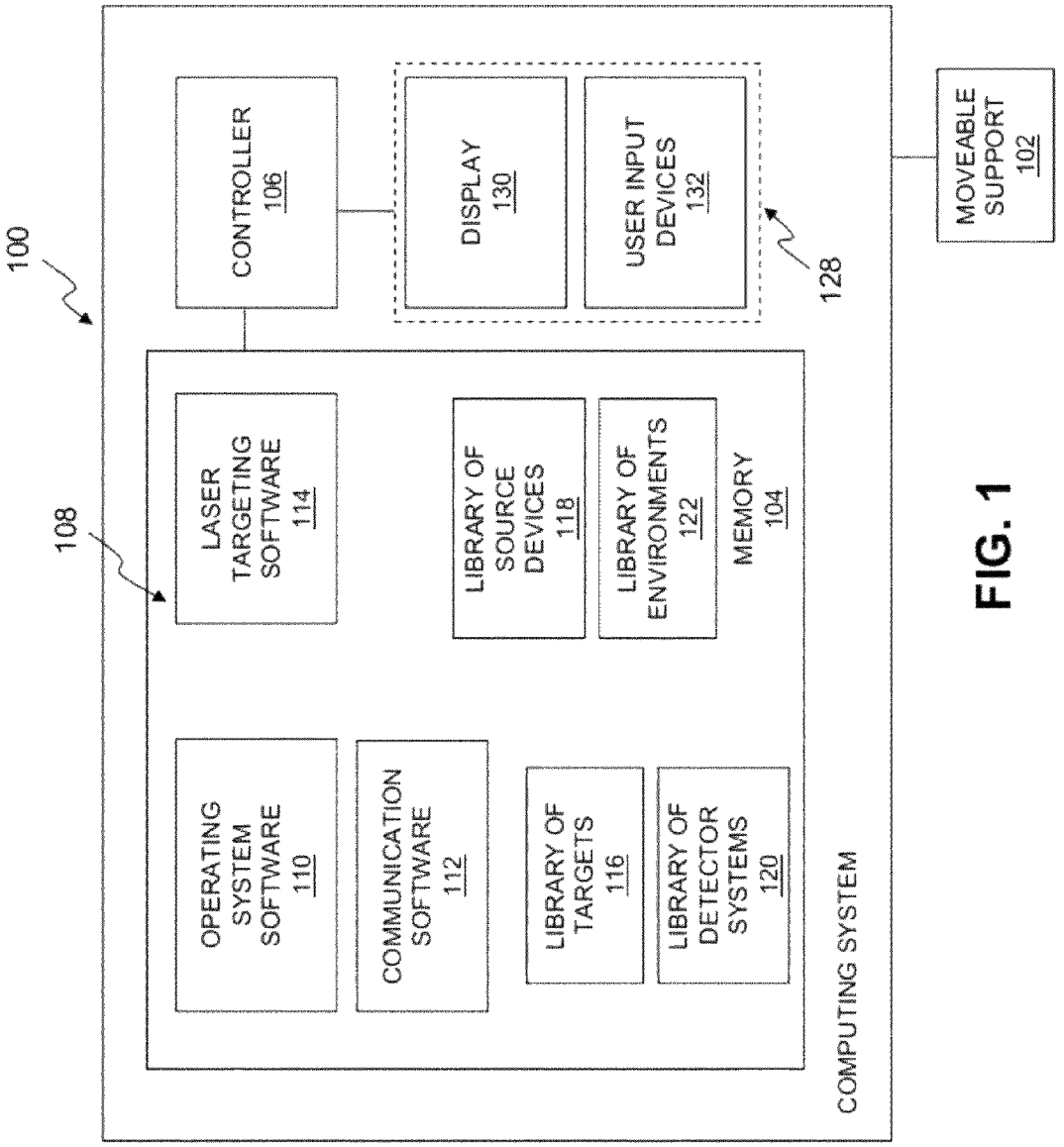
100
108
CONTROLLER 106
DISPLAY 130
USER INPUT DEVICES 132
128
MOVEABLE SUPPORT 102
LASER TARGETING SOFTWARE 114
LIBRARY OF SOURCE DEVICES 118
LIBRARY OF ENVIRONMENTS 122
MEMORY 104
OPERATING SYSTEM SOFTWARE 110
COMMUNICATION SOFTWARE 112
LIBRARY OF TARGETS 116
LIBRARY OF DETECTOR SYSTEMS 120
COMPUTING SYSTEM

FIG. 1

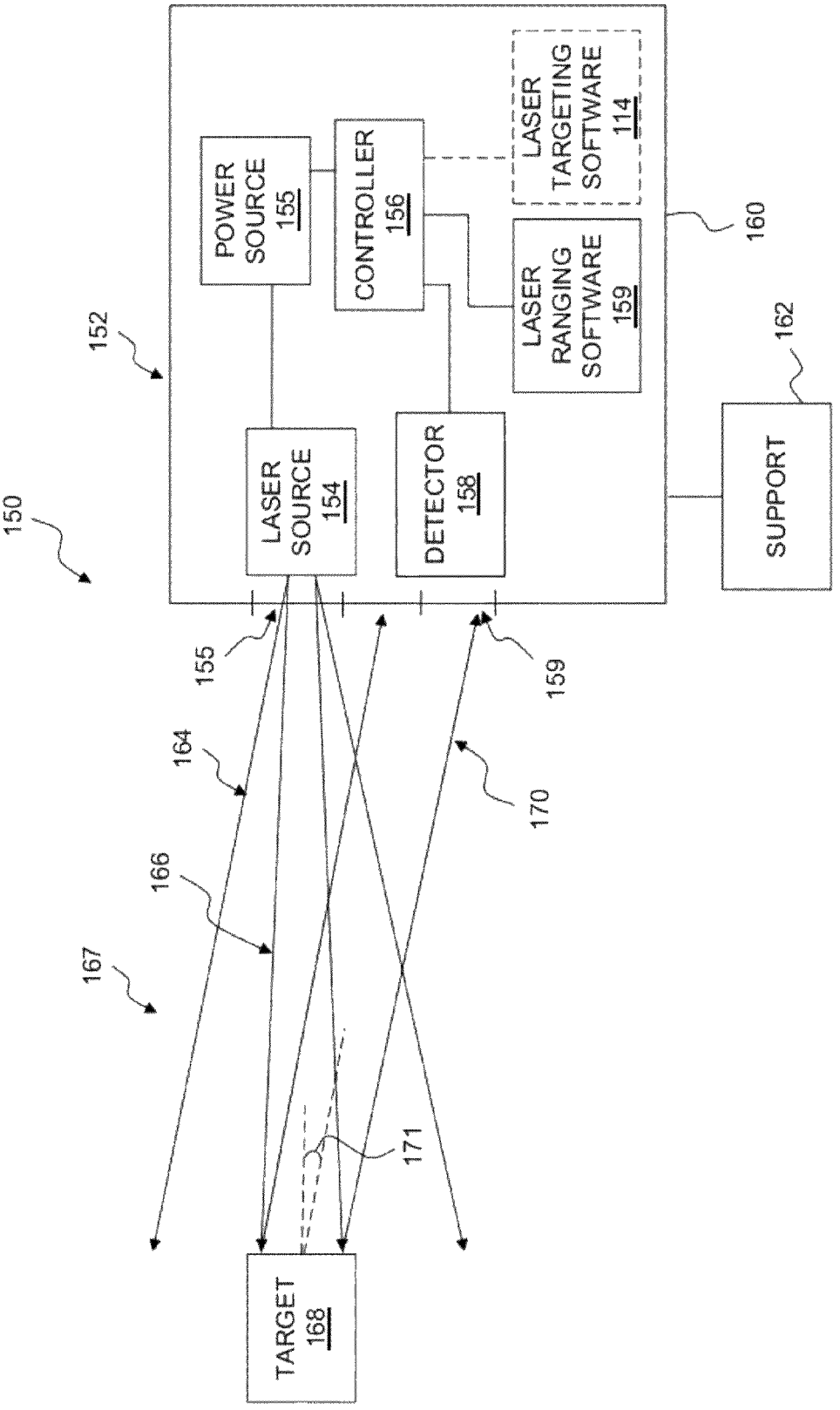
150
152
POWER SOURCE 155
CONTROLLER 156
LASER TARGETING SOFTWARE 114
LASER RANGING SOFTWARE 159
160
LASER SOURCE 154
DETECTOR 158
SUPPORT
162
155
159
164
170
166
167
171
TARGET 168

FIG. 2

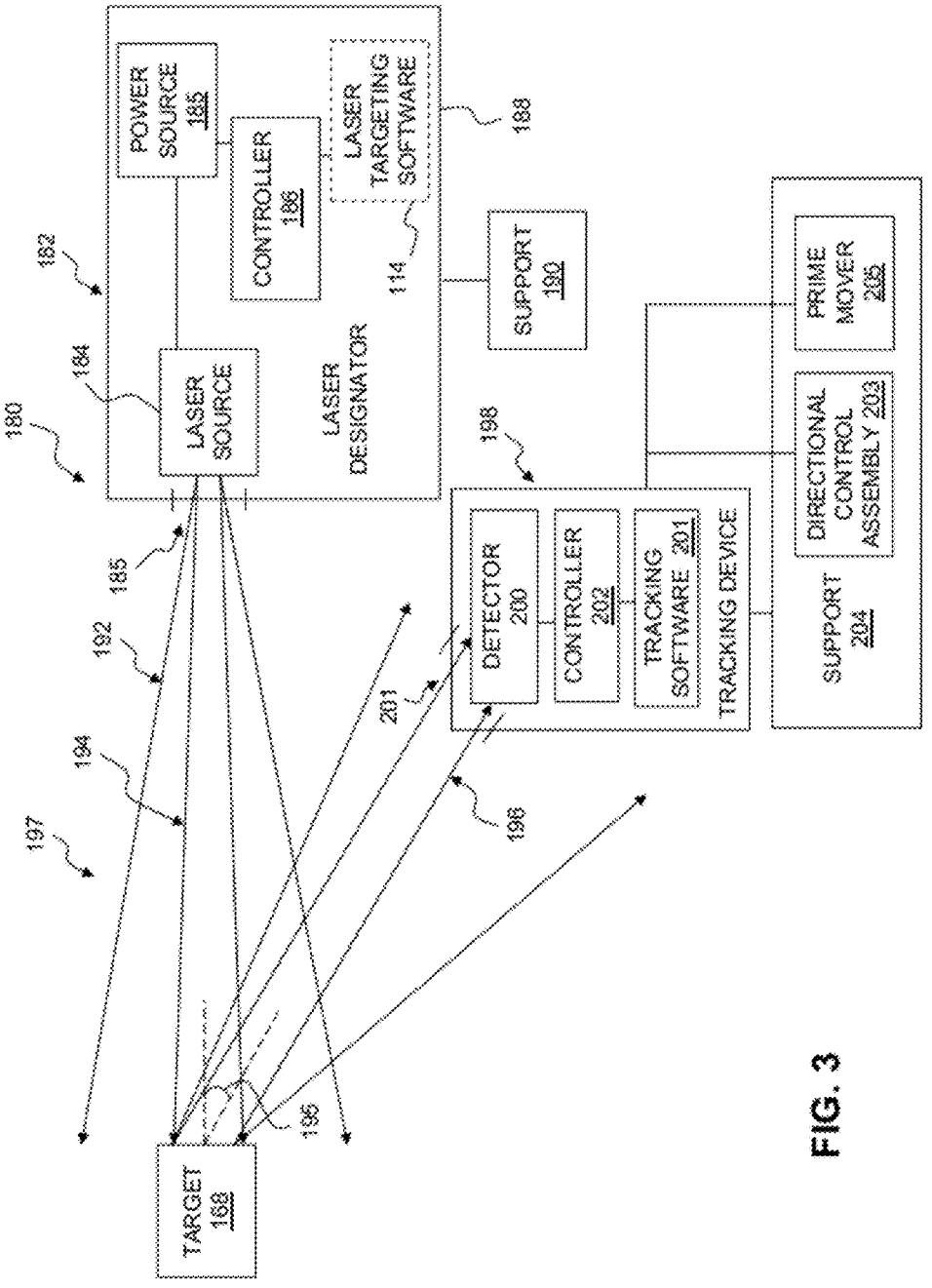
POWER SOURCE 185
CONTROLLER 186
LASER TARGETING SOFTWARE
188
114
SUPPORT 190
162
184
LASER SOURCE
LASER DESIGNATOR
180
198
PRIME MOVER 205
DIRECTIONAL CONTROL ASSEMBLY 203
185
192
DETECTOR 200
CONTROLLER 202
TRACKING SOFTWARE 201
TRACKING DEVICE
SUPPORT 204
201
194
197
196
196
TARGET 168

FIG. 3

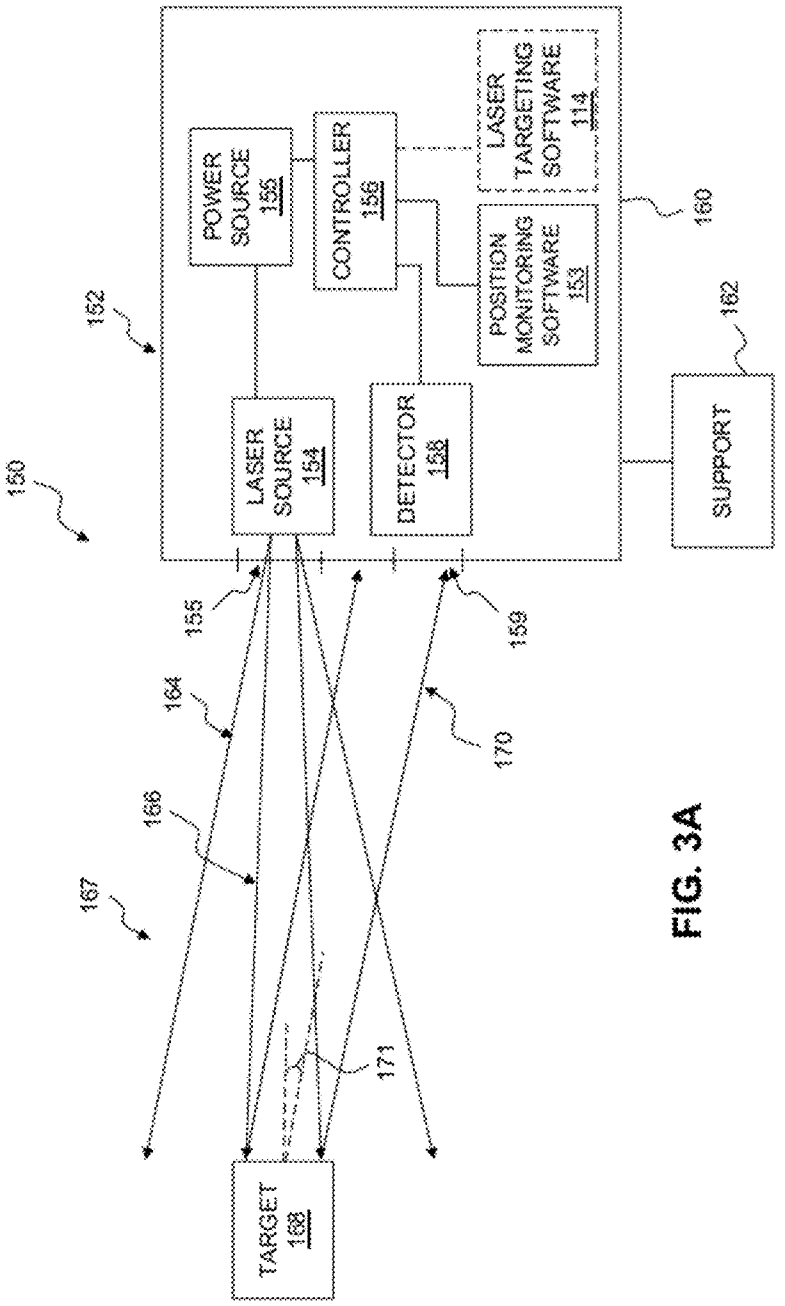
150
152
POWER SOURCE 155
CONTROLLER 156
LASER TARGETING SOFTWARE 114
POSITION MONITORING SOFTWARE 153
160
162
SUPPORT
LASER SOURCE 154
DETECTOR 158
155
159
164
170
166
167
171
TARGET 168

FIG. 3A

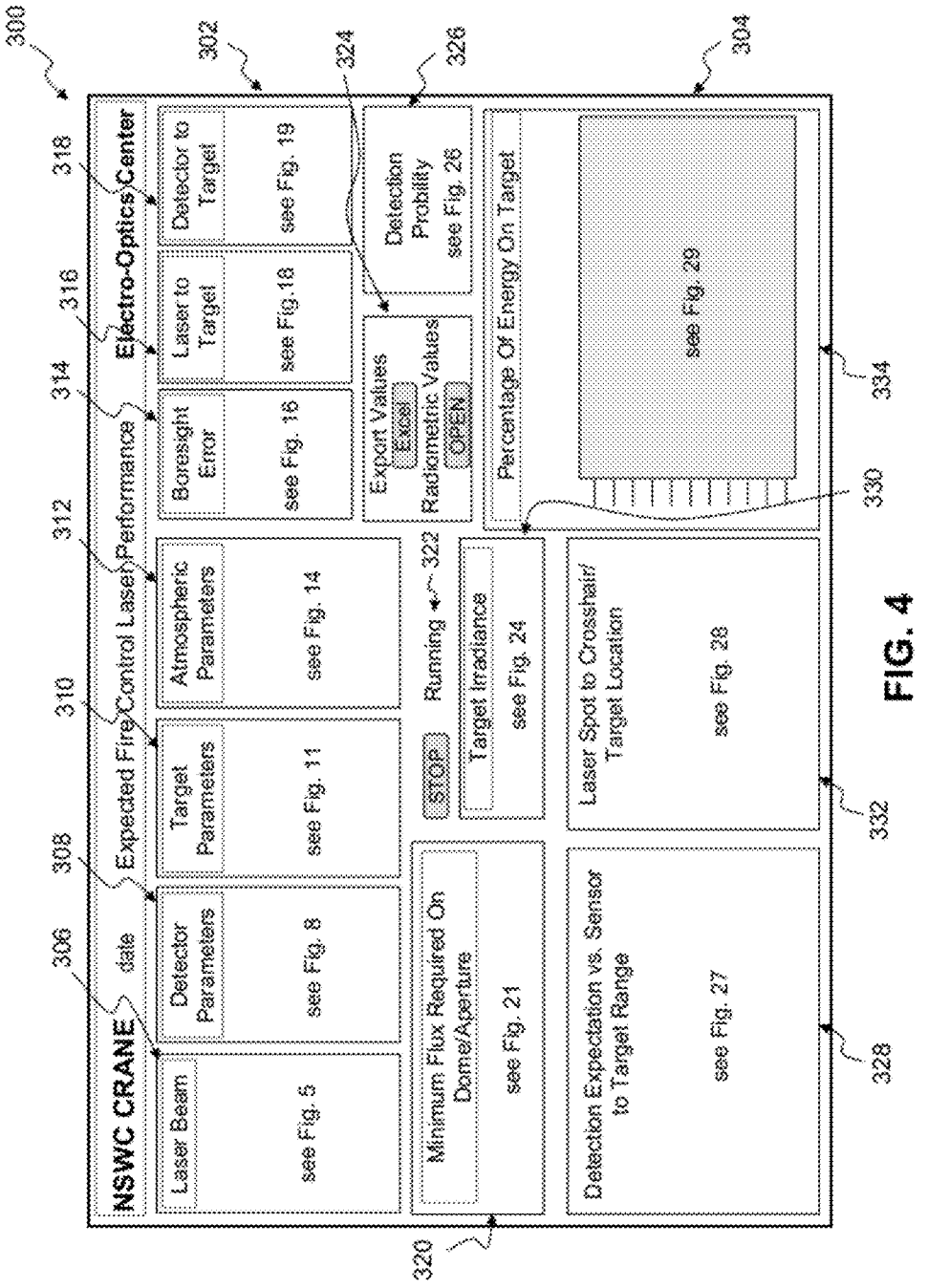
300
302
304
306
308
310
312
314
316
318
320
322
324
326
328
330
332
334
NSWC CRANE
date
Expected Fire
Control Laser
Performance
Electro-Optics Center
Laser Beam
see Fig. 5
Detector Parameters
see Fig. 8
Target Parameters
see Fig. 11
Atmospheric Parameters
see Fig. 14
Boresight Error
see Fig. 16
Laser to Target
see Fig.18
Detector to Target
see Fig. 19
Export Values
EXCEL
Radiometric Values
OPEN
Detection Probility
see Fig. 26
Percentage Of Energy On Target
see Fig. 29
STOP
Running
Minimum Flux Required On Dome/Aperture
see Fig. 21
Target Irradiance
see Fig. 24
Laser Spot to Crosshair/ Target Location
see Fig. 28
Detection Expectation vs. Sensor to Target Range
see Fig. 27

FIG. 4

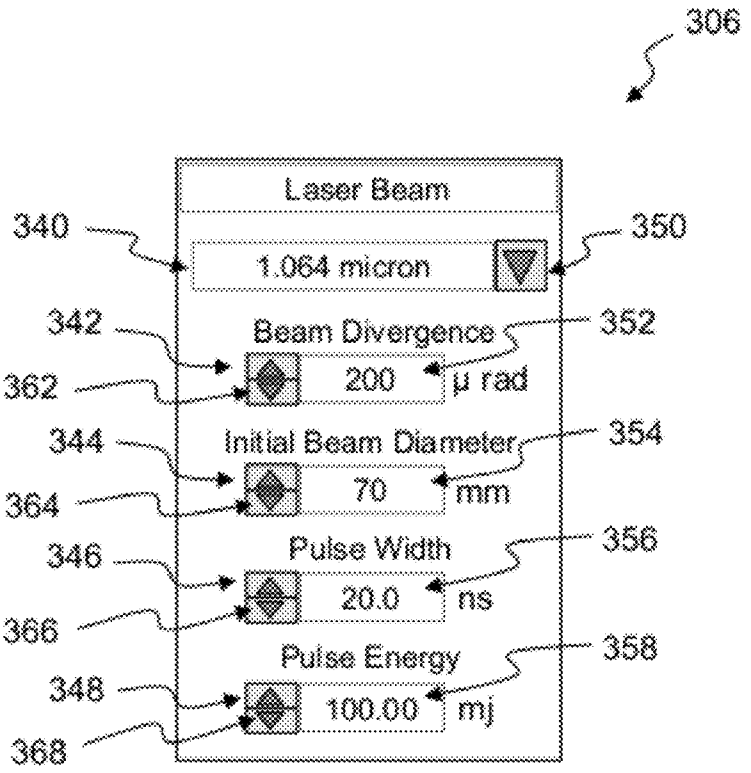
306
Laser Beam
340
1.064 micron
350
342
Beam Divergence
352
362
200
μ rad
344
Initial Beam Diameter
354
364
70
mm
346
Pulse Width
356
366
20.0
ns
Pulse Energy
358
348
100.00
mj
368

FIG. 5

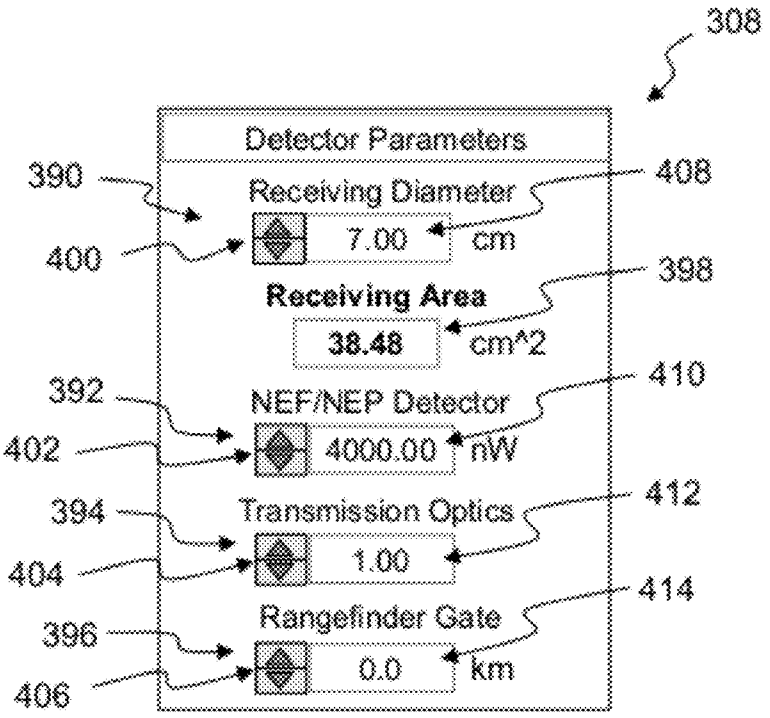
308
Detector Parameters
390
Receiving Diameter
408
400
7.00
cm
398
Receiving Area
38.48
cm^2
392
NEF/NEP Detector
410
402
4000.00
nW
394
Transmission Optics
412
404
1.00
414
Rangefinder Gate
396
406
0.0
km

FIG. 8

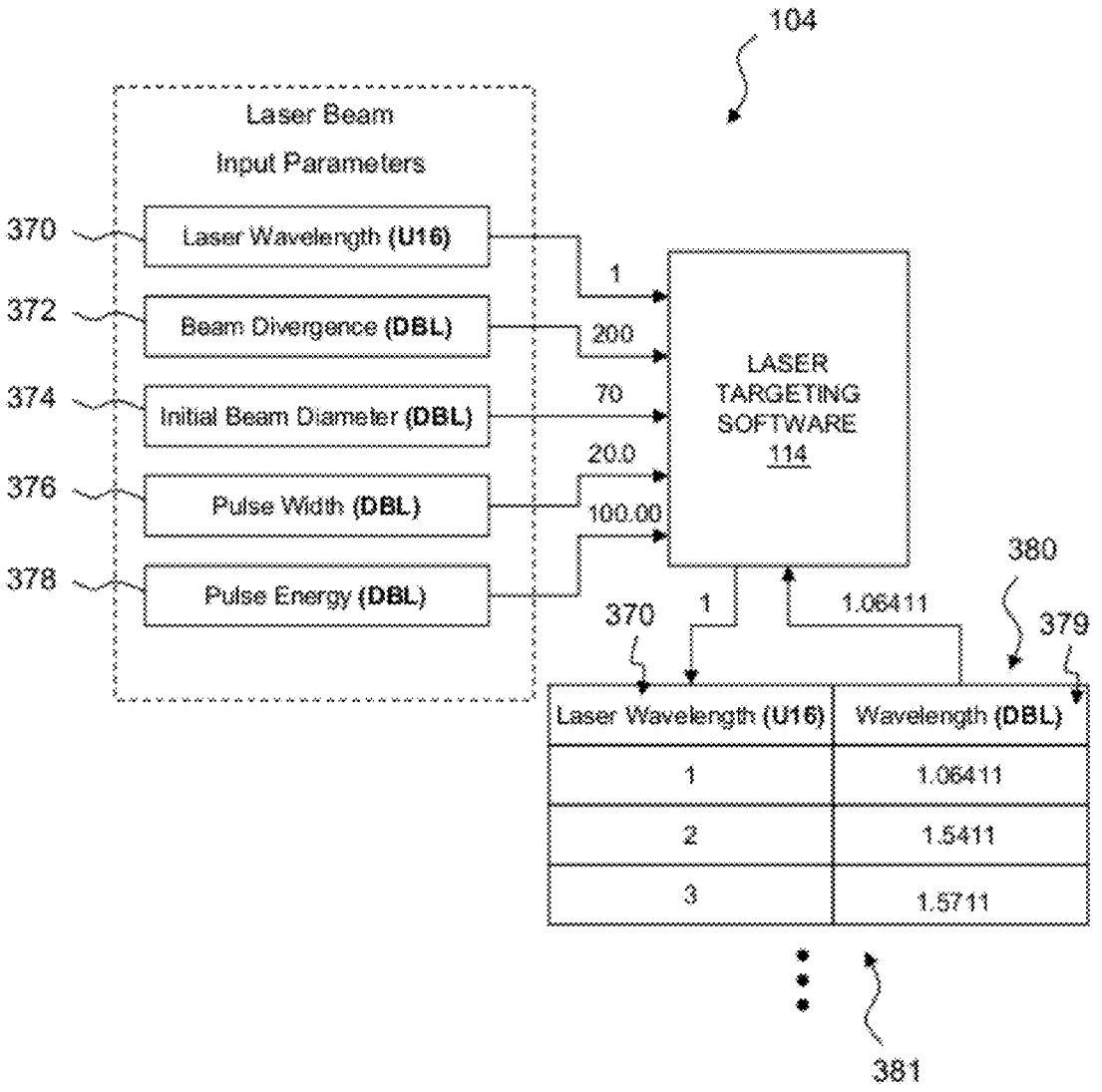
104
Laser Beam
Input Parameters
370
Laser Wavelength (U16)
372
Beam Divergence (DBL)
374
Initial Beam Diameter (DBL)
376
Pulse Width (DBL)
378
Pulse Energy (DBL)
1
200
70
20.0
100.00
LASER
TARGETING
SOFTWARE
114
380
370
1
1.06411
379
Laser Wavelength (U16)
Wavelength (DBL)
1
1.06411
2
1.5411
3
1.5711
381

FIG. 6

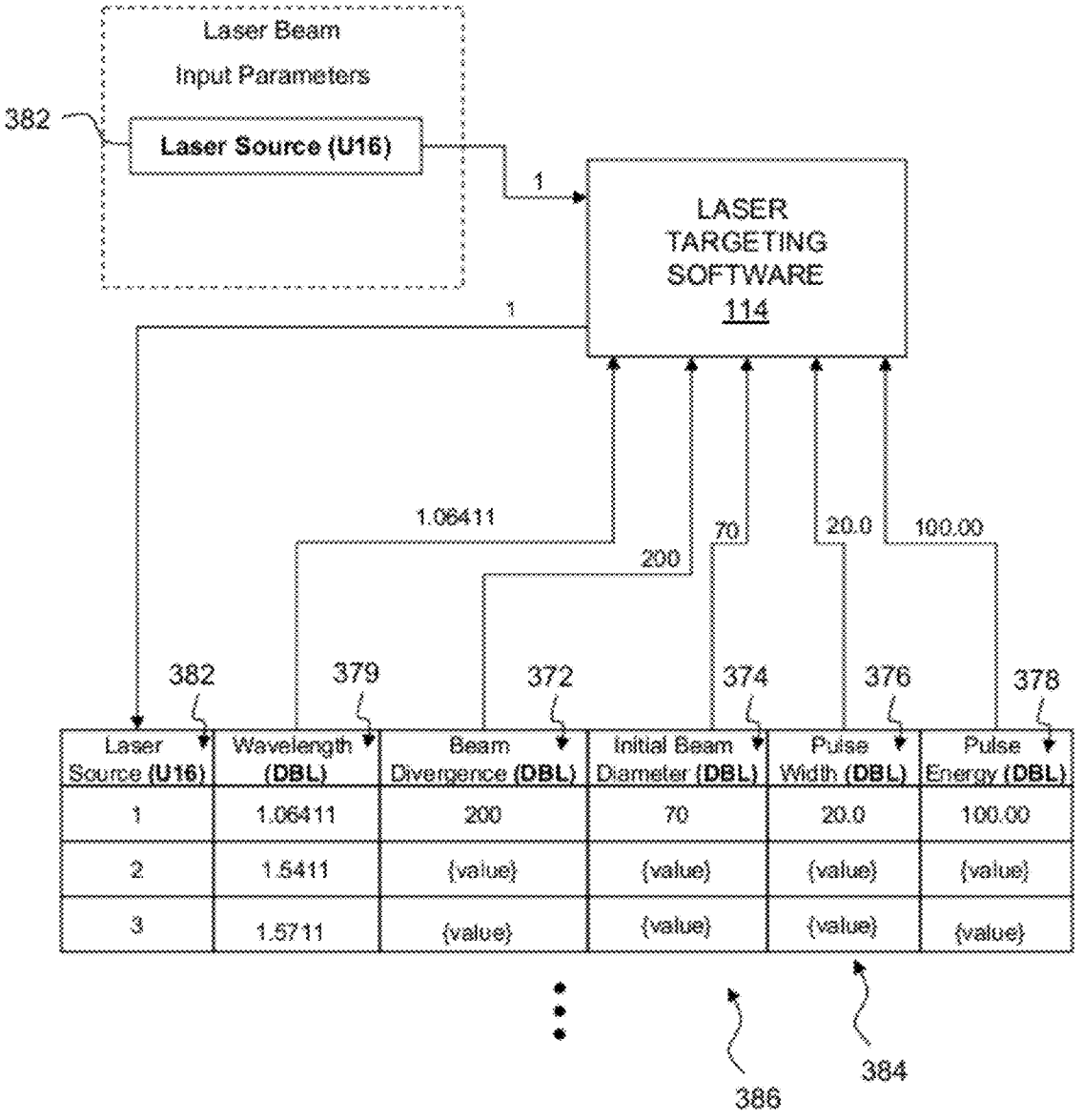
Laser Beam
Input Parameters
382
Laser Source (U16)
1
LASER
TARGETING
SOFTWARE
114
1
1.06411
200
70
20.0
100.00
382
379
372
374
376
378
Laser Source (U16)
Wavelength (DBL)
Beam Divergence (DBL)
Initial Beam Diameter (DBL)
Pulse Width (DBL)
Pulse Energy (DBL)
1
1.06411
200
70
20.0
100.00
2
1.5411
(value)
(value)
(value)
(value)
3
1.5711
(value)
(value)
(value)
(value)
386
384

FIG. 7

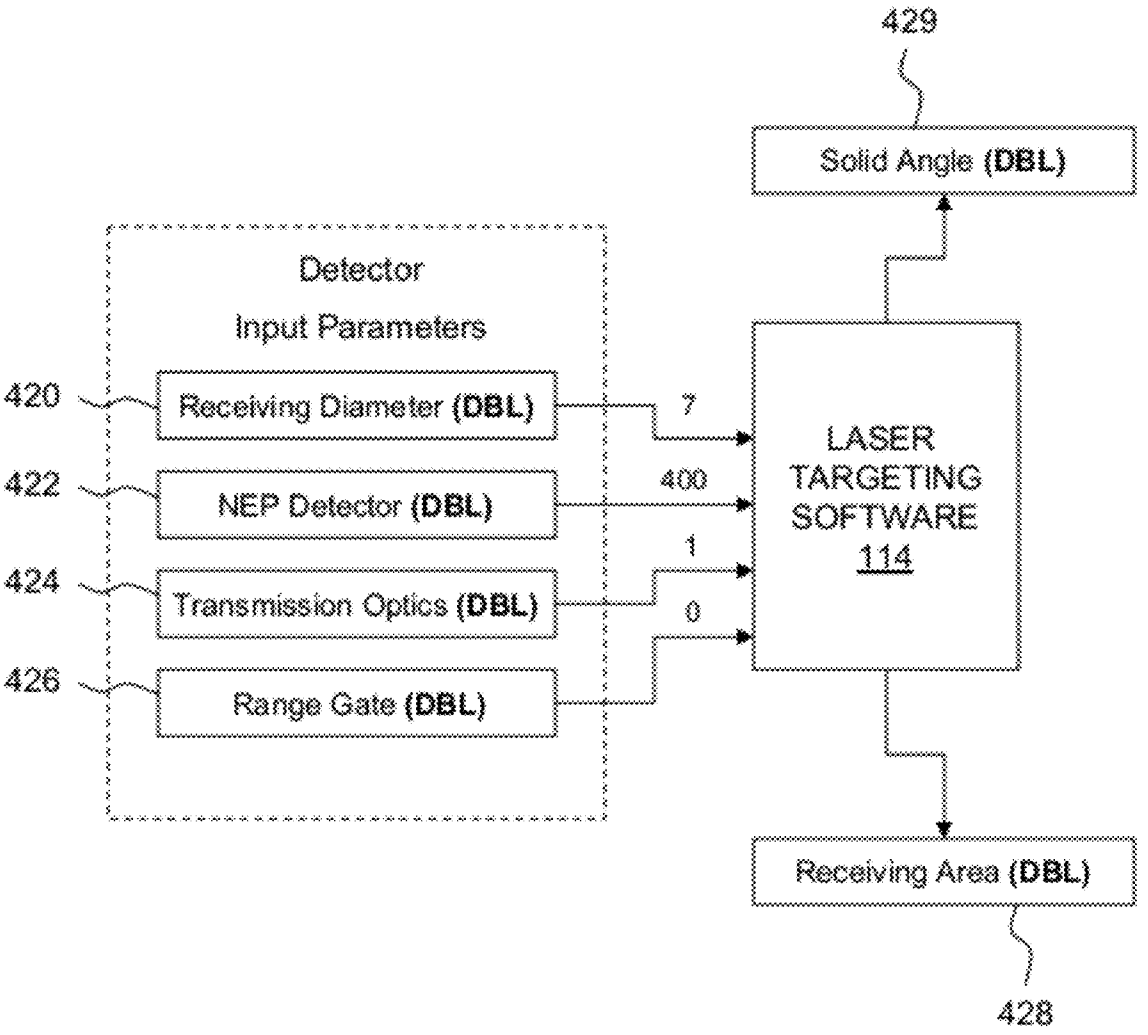
429
Solid Angle (DBL)
Detector
Input Parameters
420
Receiving Diameter (DBL)
422
NEP Detector (DBL)
424
Transmission Optics (DBL)
426
Range Gate (DBL)
7
400
1
0
LASER
TARGETING
SOFTWARE
114
Receiving Area (DBL)
428

FIG. 9

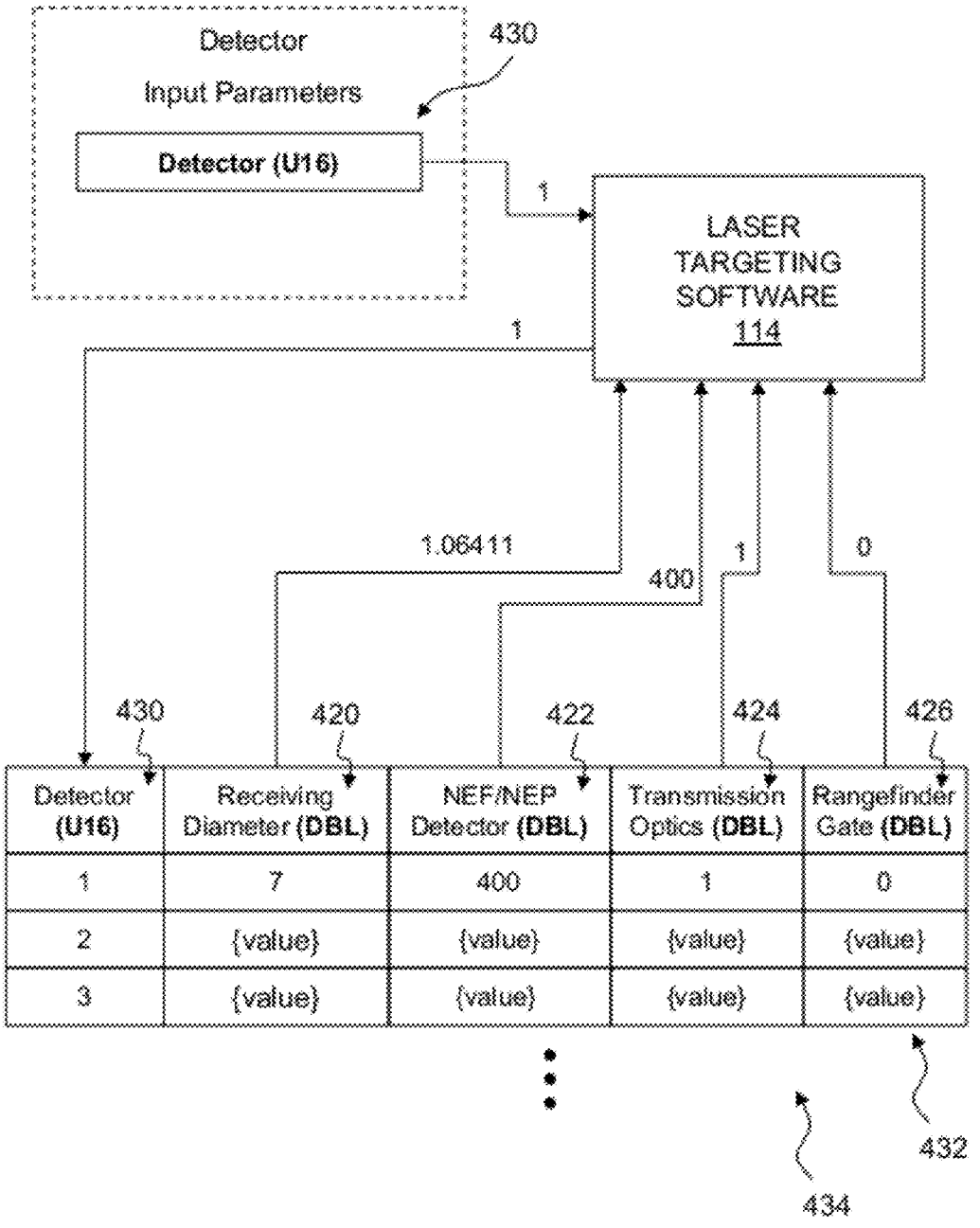
Detector
Input Parameters
Detector (U16)
430
1
LASER
TARGETING
SOFTWARE
114
1
1.06411
400
1
0
430
420
422
424
426
Detector (U16)
Receiving Diameter (DBL)
NEF/NEP Detector (DBL)
Transmission Optics (DBL)
Rangefinder Gate (DBL)
1
7
400
1
0
2
{value}
{value}
{value}
{value}
3
{value}
{value}
{value}
{value}
432
434

FIG. 10

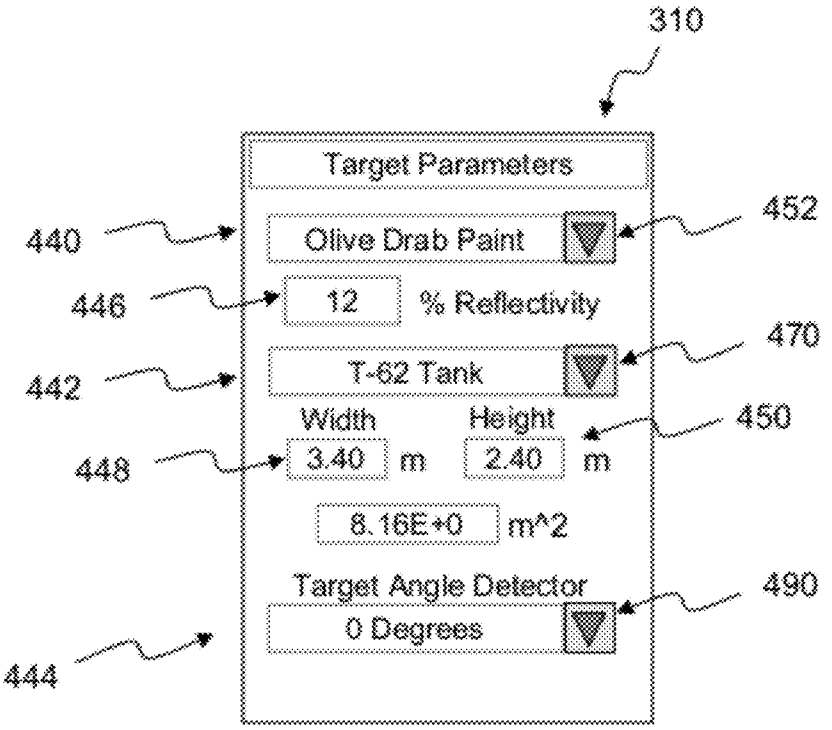
310
Target Parameters
440
Olive Drab Paint
452
446
12
% Reflectivity
470
442
T-62 Tank
Width
Height
450
448
3.40
m
2.40
m
8.16E+0
m^2
Target Angle Detector
490
0 Degrees
444

FIG. 11

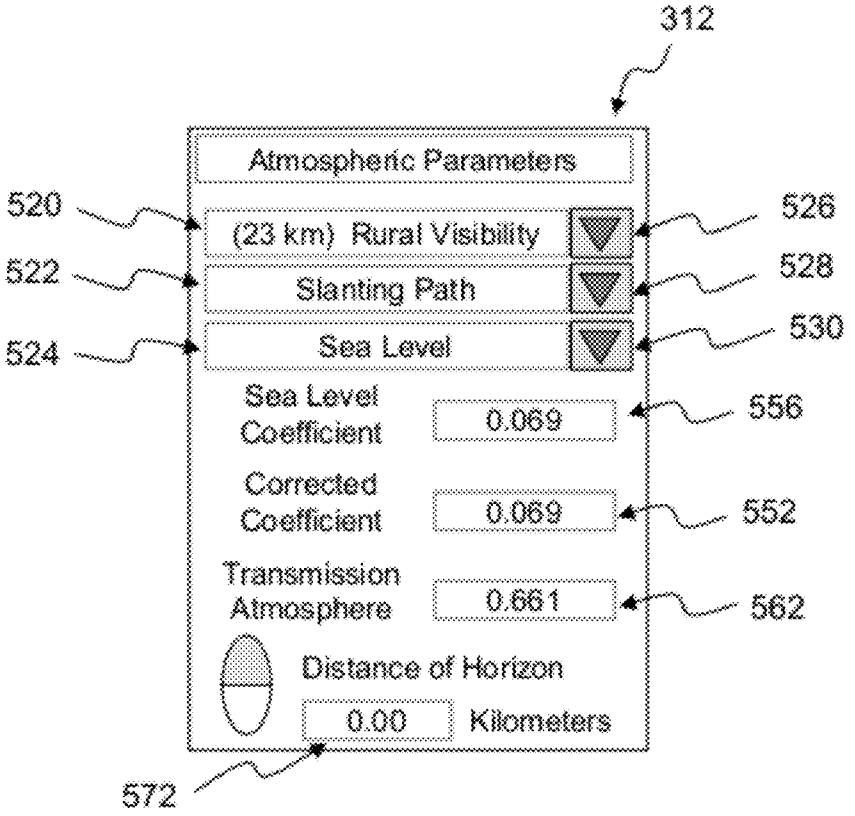
312
Atmospheric Parameters
520
526
(23 km) Rural Visibility
522
528
Slanting Path
524
530
Sea Level
Sea Level Coefficient
0.069
556
Corrected Coefficient
0.069
552
Transmission Atmosphere
0.661
562
Distance of Horizon
0.00
Kilometers
572

FIG. 14

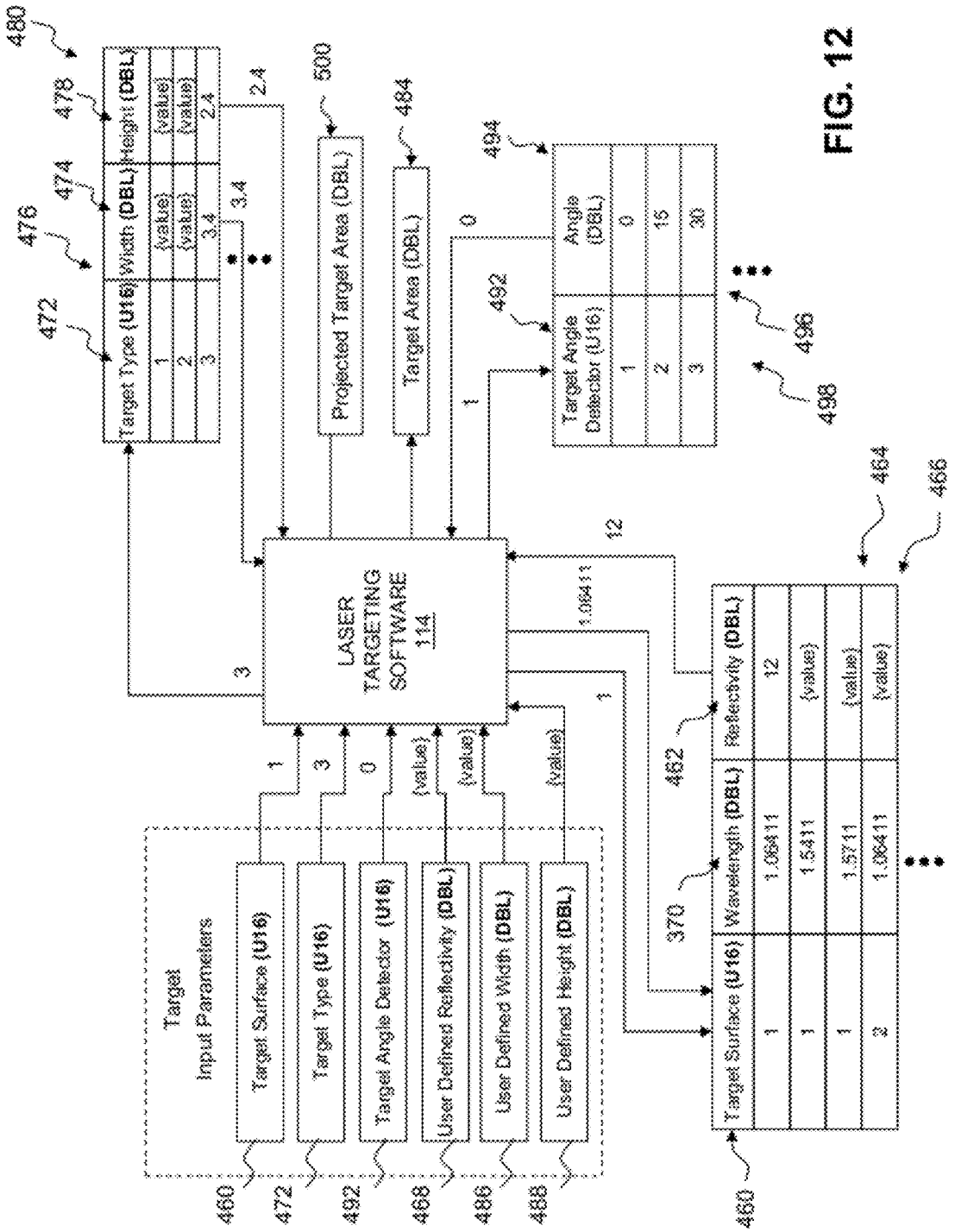

Target Input Parameters
Target Surface (U16)
Target Type (U16)
Target Angle Detector (U16)
User Defined Reflectivity (DBL)
User Defined Width (DBL)
User Defined Height (DBL)
LASER TARGETING SOFTWARE 114
Target Type (U16)
Width (DBL)
Height (DBL)
Projected Target Area (DBL)
Target Area (DBL)
Target Angle Detector (U16)
Angle (DBL)
Target Surface (U16)
Wavelength (DBL)
Reflectivity (DBL)
1.06411
1.5411
1.5711
(value)

FIG. 12

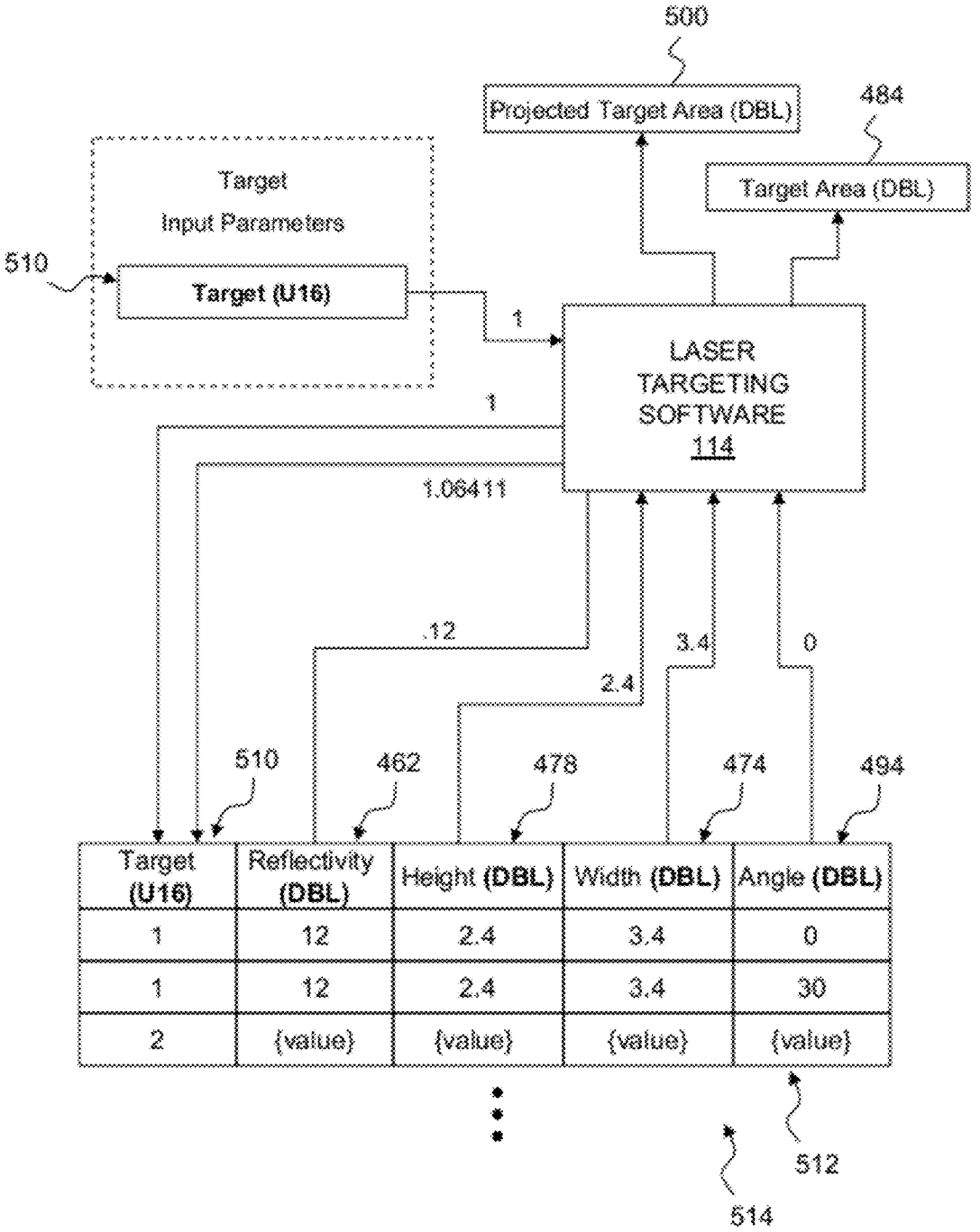
500
Projected Target Area (DBL)
484
Target Area (DBL)
Target
Input Parameters
510
Target (U16)
1
1
LASER
TARGETING
SOFTWARE
114
1.06411
.12
2.4
3.4
0
510
462
478
474
494
Target (U16)
Reflectivity (DBL)
Height (DBL)
Width (DBL)
Angle (DBL)
1
12
2.4
3.4
0
1
12
2.4
3.4
30
2
{value}
{value}
{value}
{value}
512
514

FIG. 13

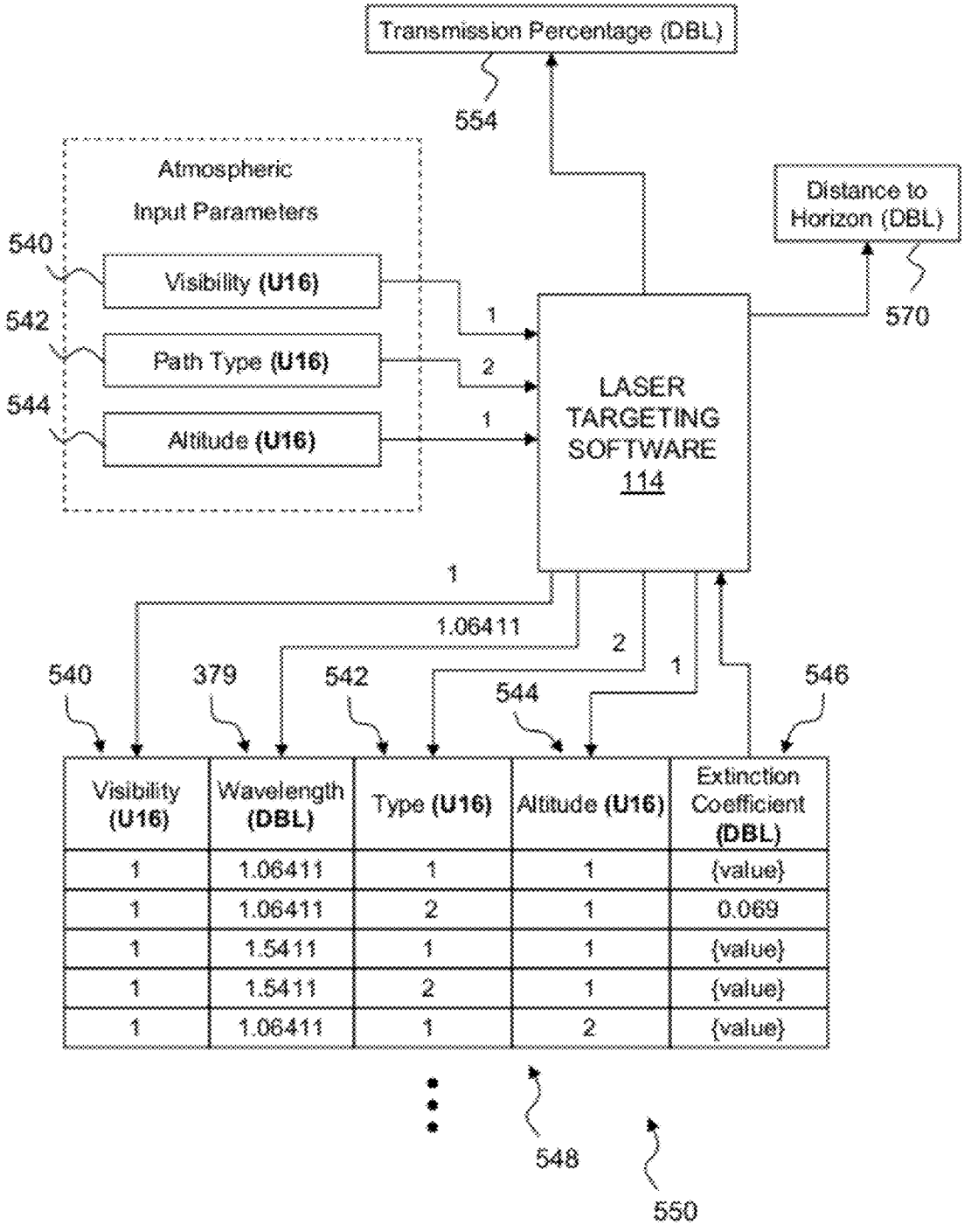
Transmission Percentage (DBL)
554
Atmospheric
Input Parameters
540
Visibility (U16)
542
Path Type (U16)
544
Altitude (U16)
1
2
1
LASER
TARGETING
SOFTWARE
114
Distance to
Horizon (DBL)
570
1
1.06411
2
1
540
379
542
544
546
Visibility (U16)
Wavelength (DBL)
Type (U16)
Altitude (U16)
Extinction Coefficient (DBL)
1 1.06411 1 1 {value}
1 1.06411 2 1 0.069
1 1.5411 1 1 {value}
1 1.5411 2 1 {value}
1 1.06411 1 2 {value}
548
550

FIG. 15

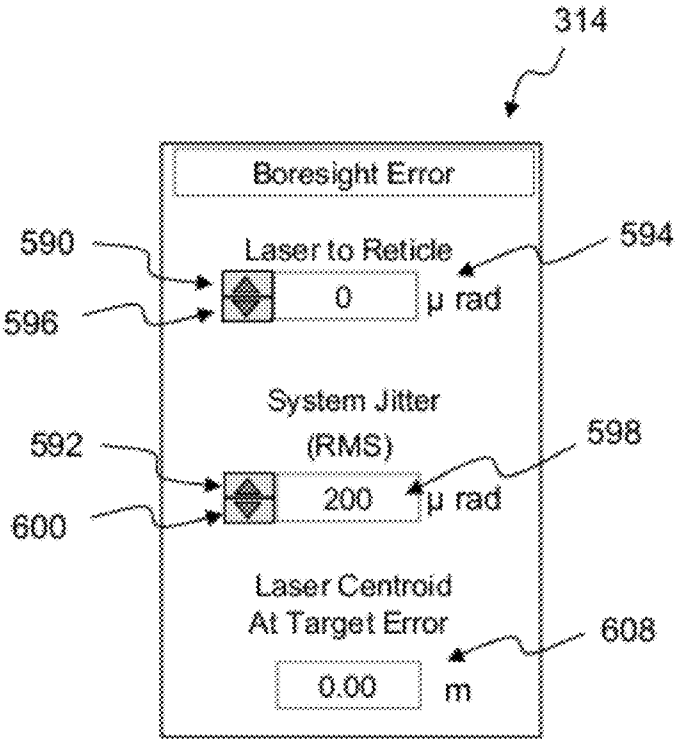
314
Boresight Error
590
Laser to Reticle
594
0
μ rad
596
System Jitter
(RMS)
592
598
200
μ rad
600
Laser Centroid
At Target Error
608
0.00
m

FIG. 16

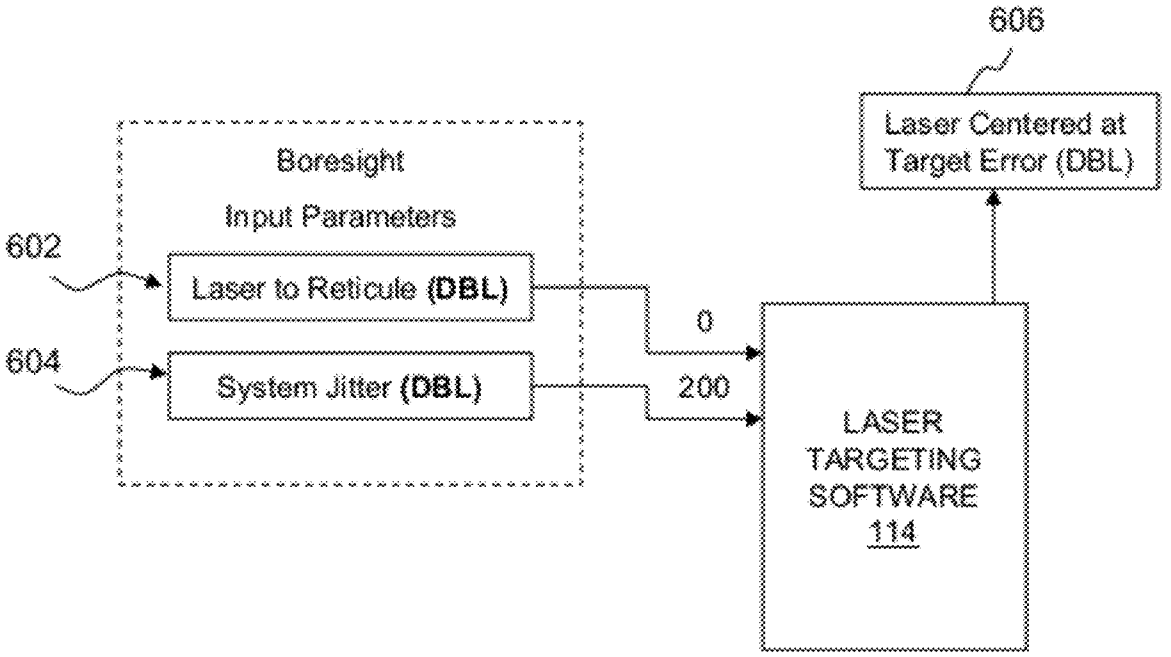
606
Laser Centered at
Target Error (DBL)
Boresight
Input Parameters
602
Laser to Reticule (DBL)
604
System Jitter (DBL)
0
200
LASER
TARGETING
SOFTWARE
114

FIG. 17

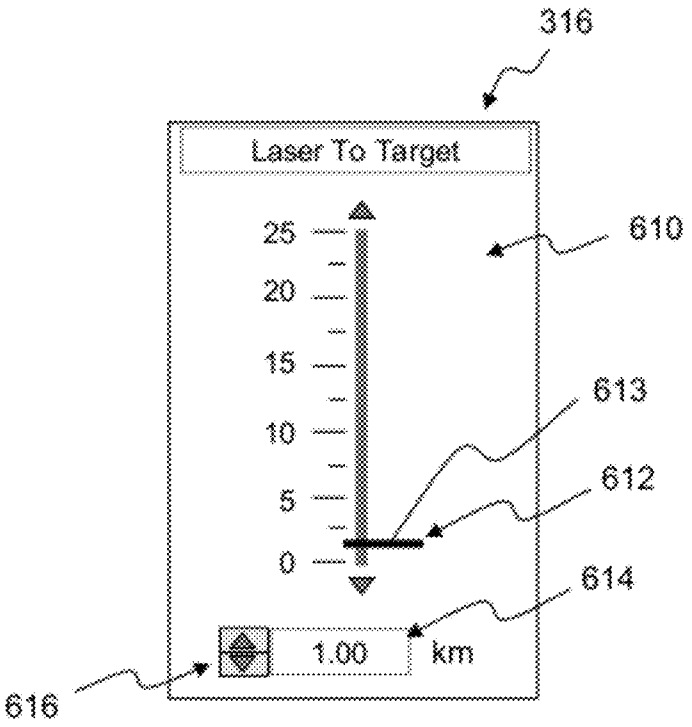
316
Laser To Target
610
25
20
15
10
5
0
613
612
614
1.00
km
616

FIG. 18

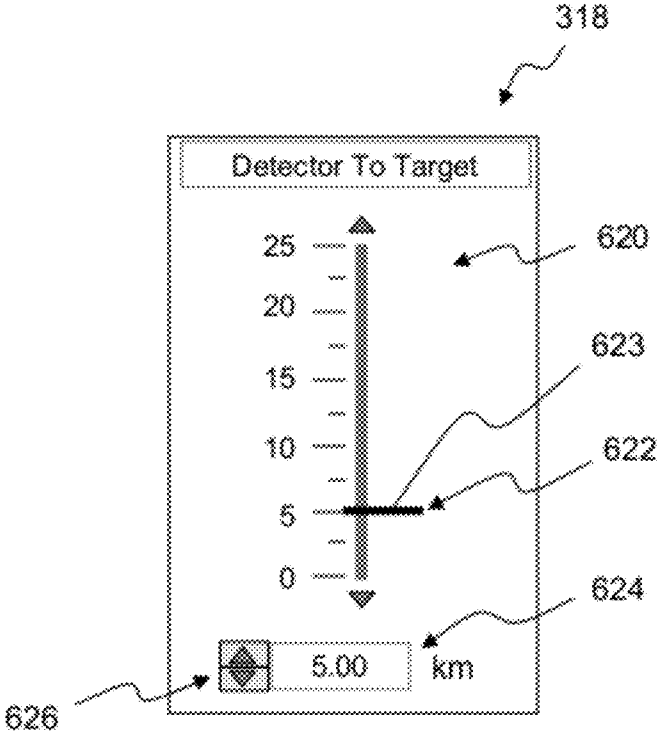
318
Detector To Target
620
25
20
15
10
5
0
623
622
624
5.00
km
626

FIG. 19

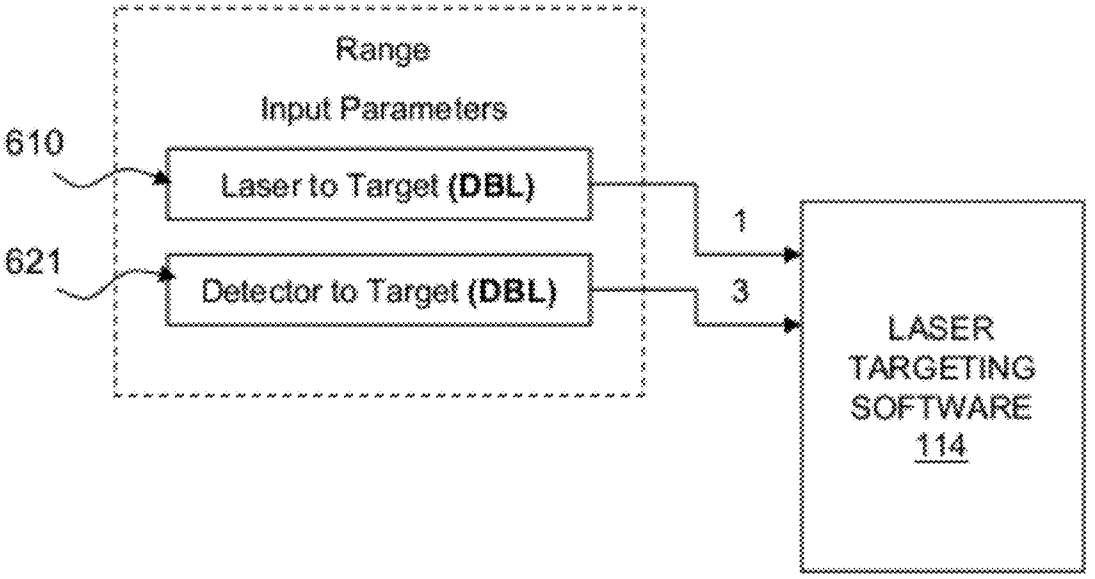
Range
Input Parameters
610
Laser to Target (DBL)
621
Detector to Target (DBL)
1
3
LASER
TARGETING
SOFTWARE
114

FIG. 20

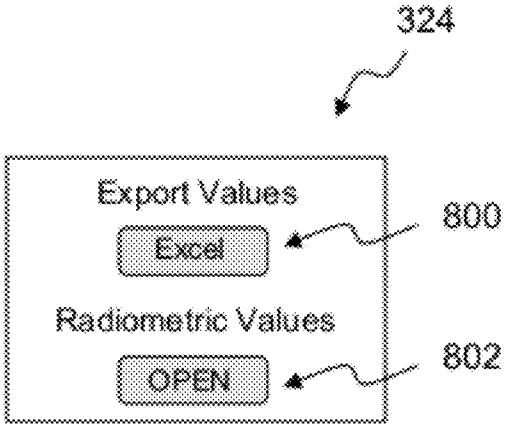
324
Export Values
Excel
800
Radiometric Values
OPEN
802

FIG. 30

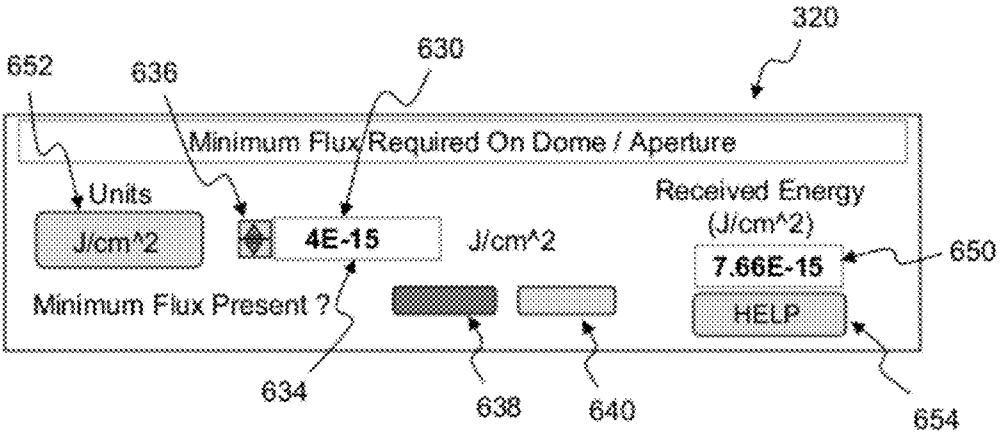

FIG. 21

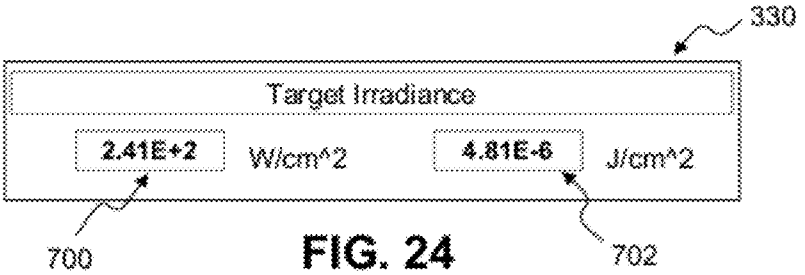

FIG. 24

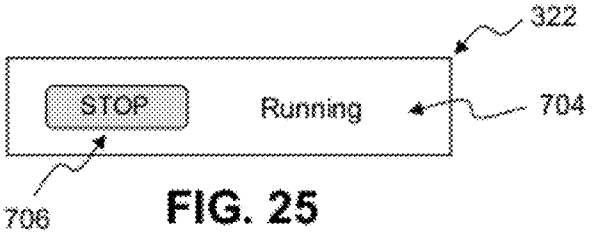

FIG. 25

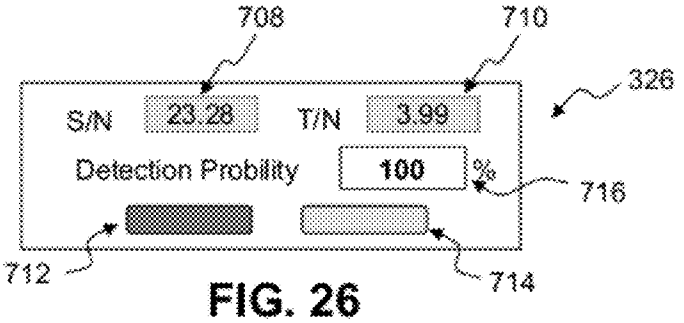

FIG. 26

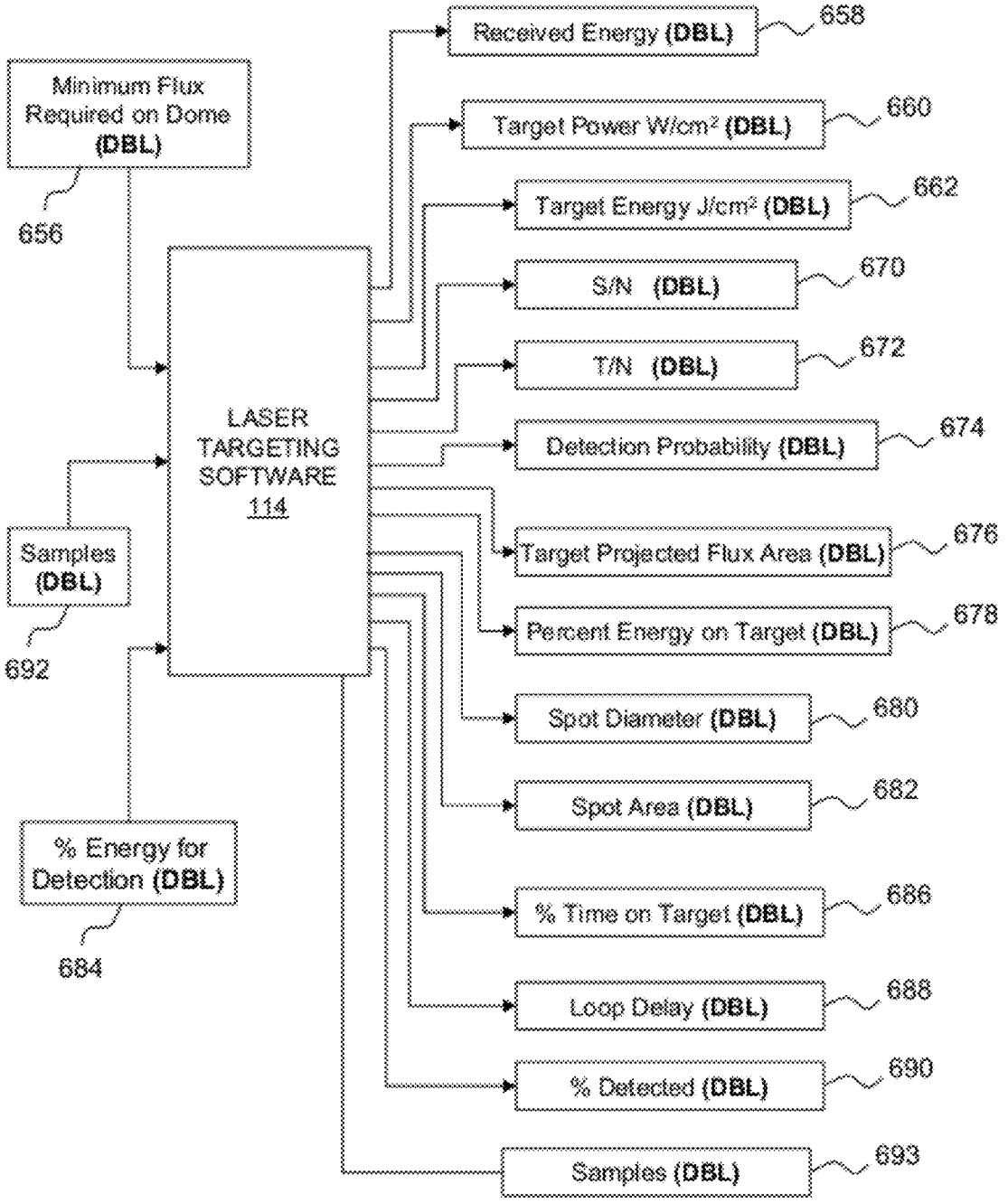
Minimum Flux Required on Dome (DBL)
656
Samples (DBL)
692
% Energy for Detection (DBL)
684
LASER TARGETING SOFTWARE 114
Received Energy (DBL)
658
Target Power W/cm² (DBL)
660
Target Energy J/cm² (DBL)
662
S/N (DBL)
670
T/N (DBL)
672
Detection Probability (DBL)
674
Target Projected Flux Area (DBL)
676
Percent Energy on Target (DBL)
678
Spot Diameter (DBL)
680
Spot Area (DBL)
682
% Time on Target (DBL)
686
Loop Delay (DBL)
688
% Detected (DBL)
690
Samples (DBL)
693

FIG. 22

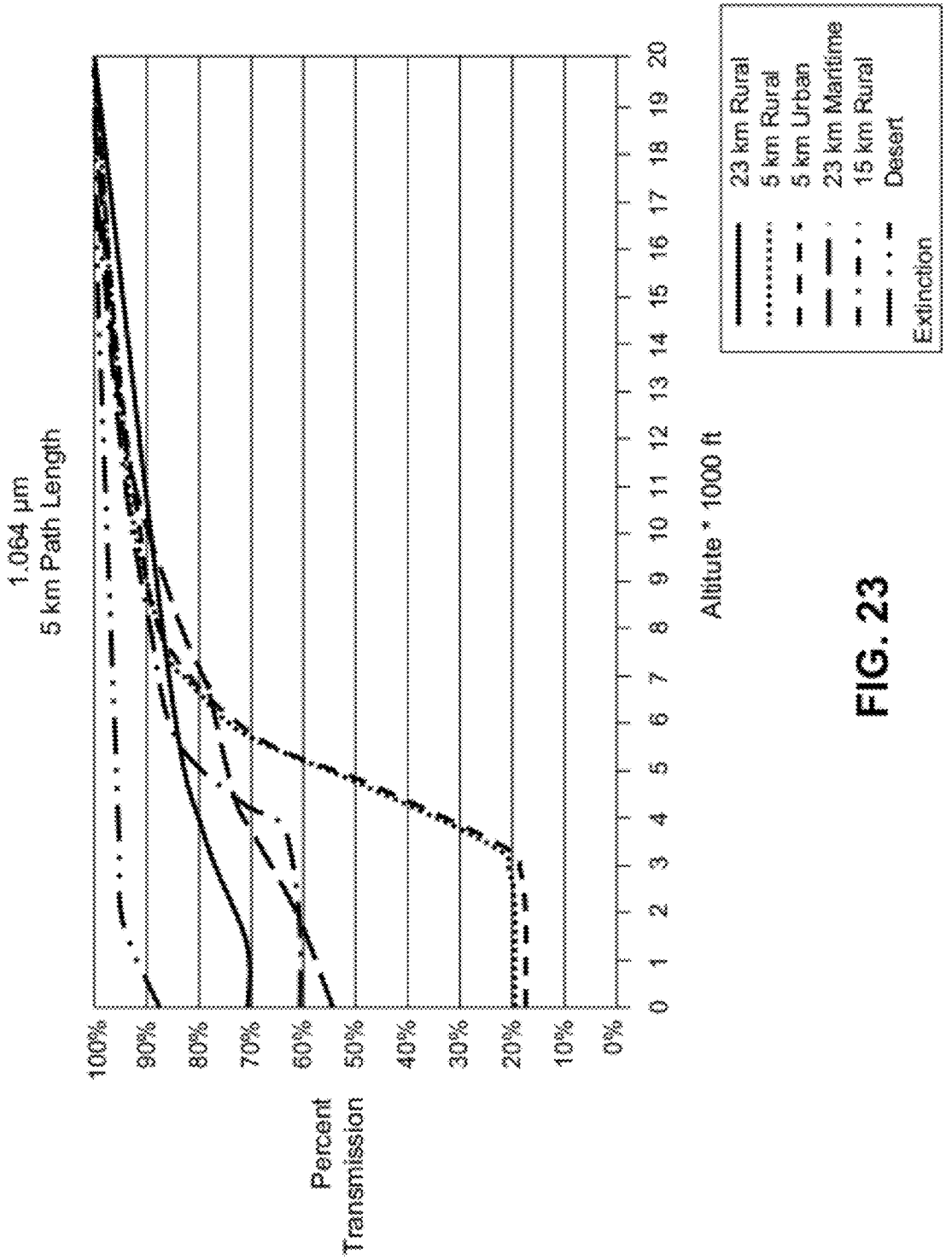
1.064 µm
5 km Path Length
Percent Transmission
100%
90%
80%
70%
60%
50%
40%
30%
20%
10%
0%
0 1 2 3 4 5 6 7 8 9 10 11 12 13 14 15 16 17 18 19 20
Altitute * 1000 ft
23 km Rural
5 km Rural
5 km Urban
23 km Maritime
15 km Rural
Desert
Extinction

FIG. 23

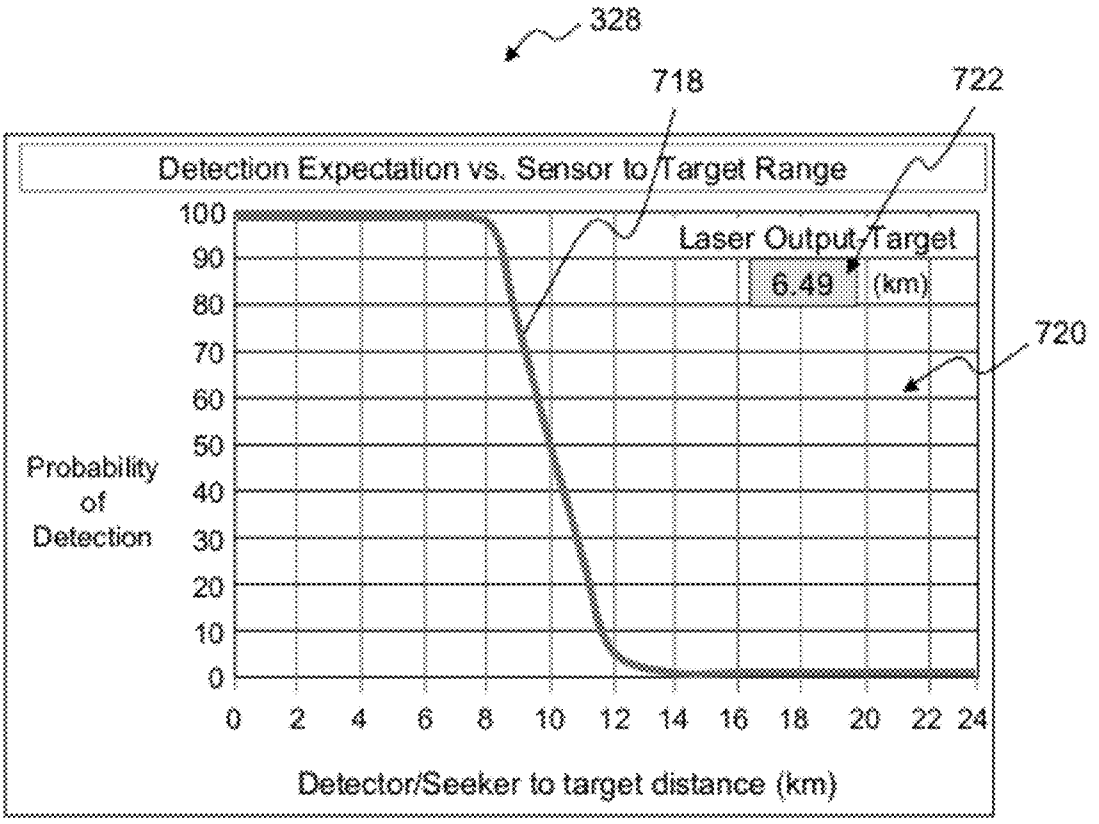
328
718
722
Detection Expectation vs. Sensor to Target Range
Laser Output Target
6.49
(km)
720
Probability of Detection
100
90
80
70
60
50
40
30
20
10
0
0 2 4 6 8 10 12 14 16 18 20 22 24
Detector/Seeker to target distance (km)

FIG. 27

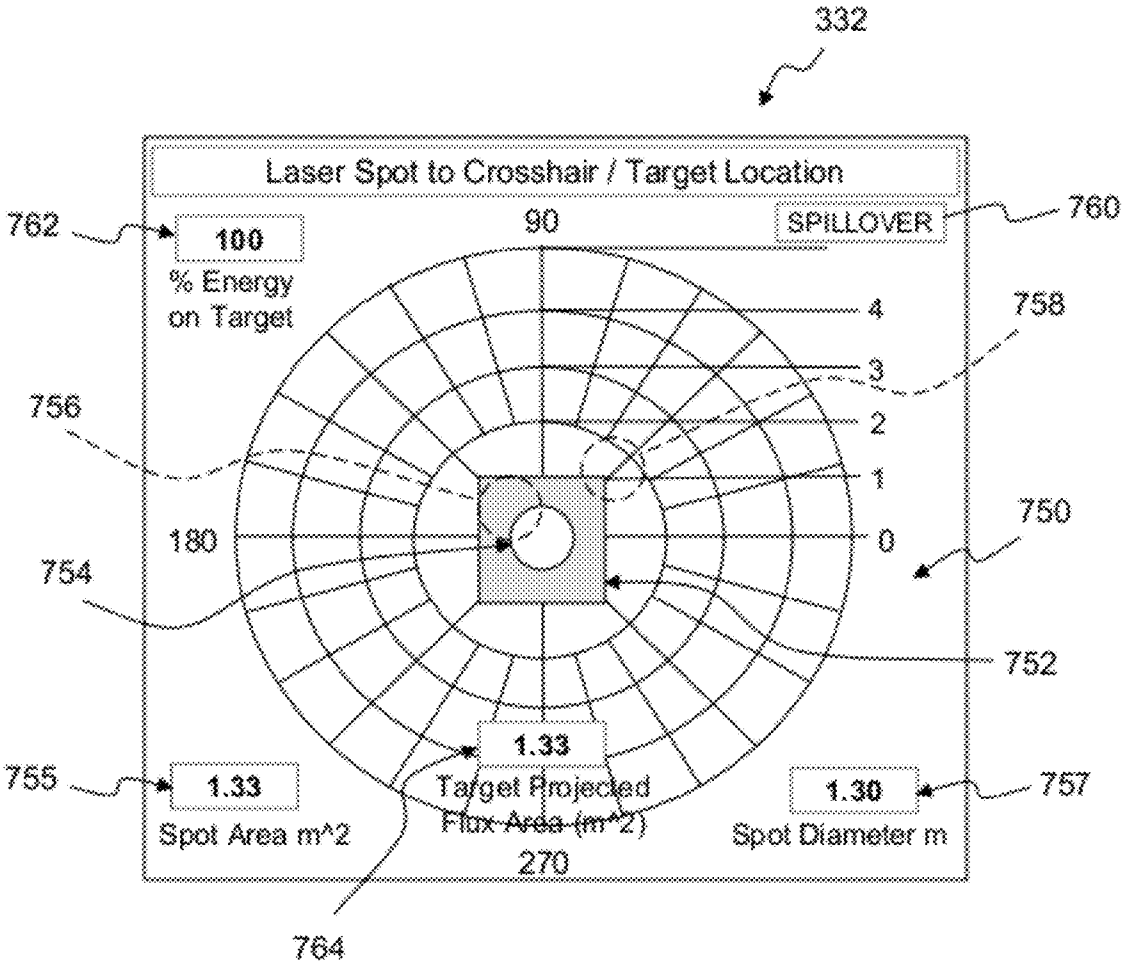
332
Laser Spot to Crosshair / Target Location
762
100
% Energy on Target
90
SPILLOVER
760
758
4
3
2
1
0
756
180
750
754
752
1.33
Target Projected Flux Area (m^2)
755
1.33
Spot Area m^2
1.30
Spot Diameter m
757
270
764

FIG. 28

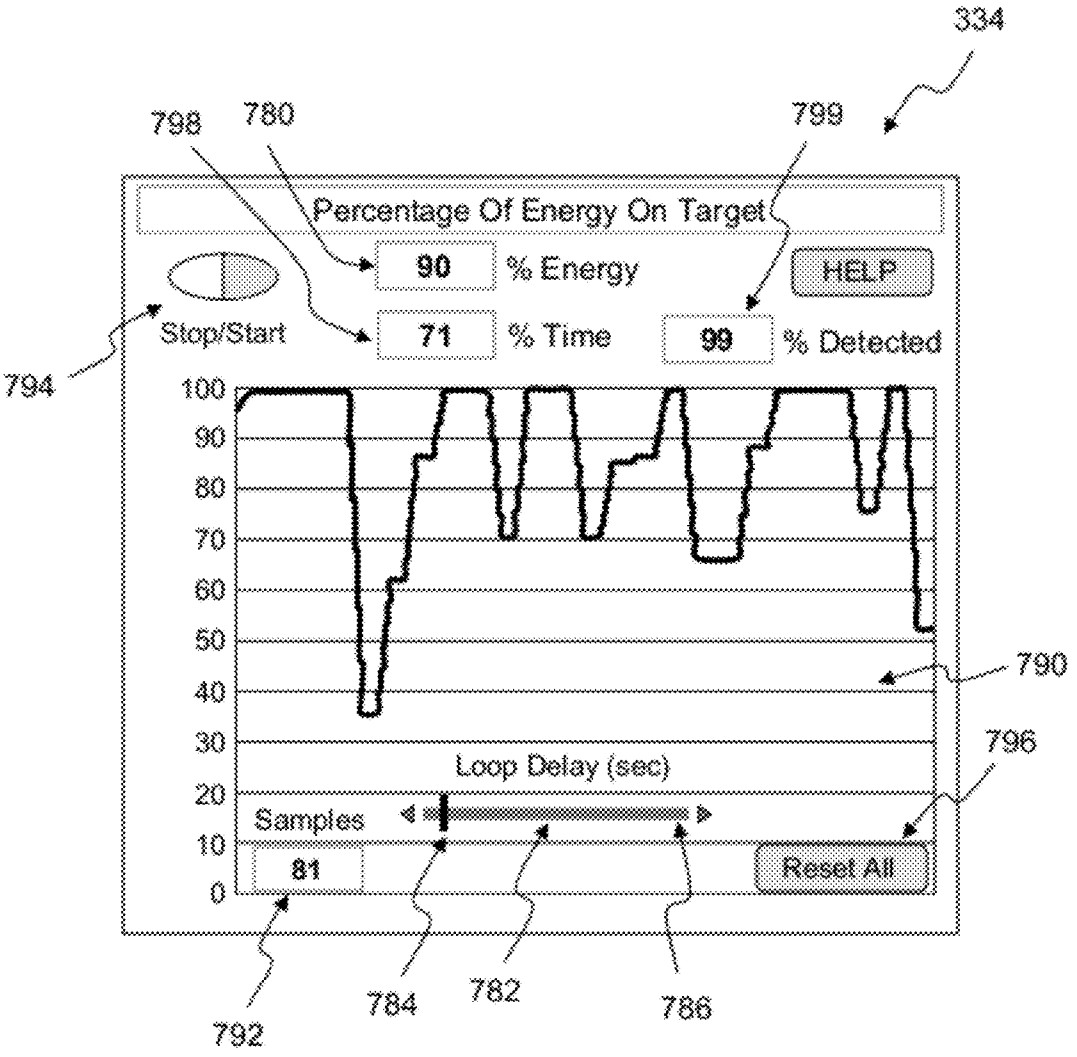
334
798
780
799
Percentage Of Energy On Target
90
% Energy
HELP
Stop/Start
71
% Time
99
% Detected
794
100
90
80
70
60
50
40
30
20
10
0
790
796
Loop Delay (sec)
Samples
81
Reset All
792
784
782
786

FIG. 29

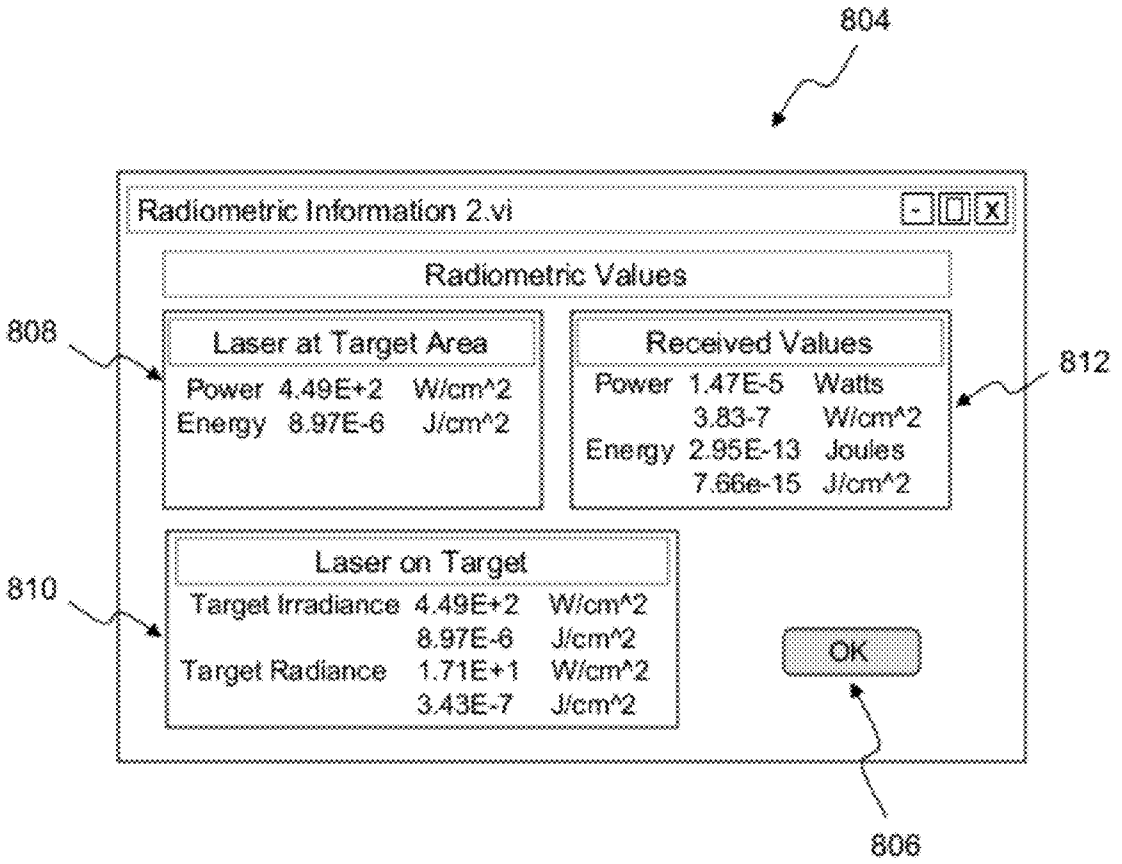
804
Radiometric Information 2.vi
Radiometric Values
808
Laser at Target Area
Power 4.49E+2 W/cm^2
Energy 8.97E-6 J/cm^2
Received Values
Power 1.47E-5 Watts
3.83-7 W/cm^2
Energy 2.95E-13 Joules
7.66e-15 J/cm^2
812
810
Laser on Target
Target Irradiance 4.49E+2 W/cm^2
8.97E-6 J/cm^2
Target Radiance 1.71E+1 W/cm^2
3.43E-7 J/cm^2
OK
806

FIG. 31

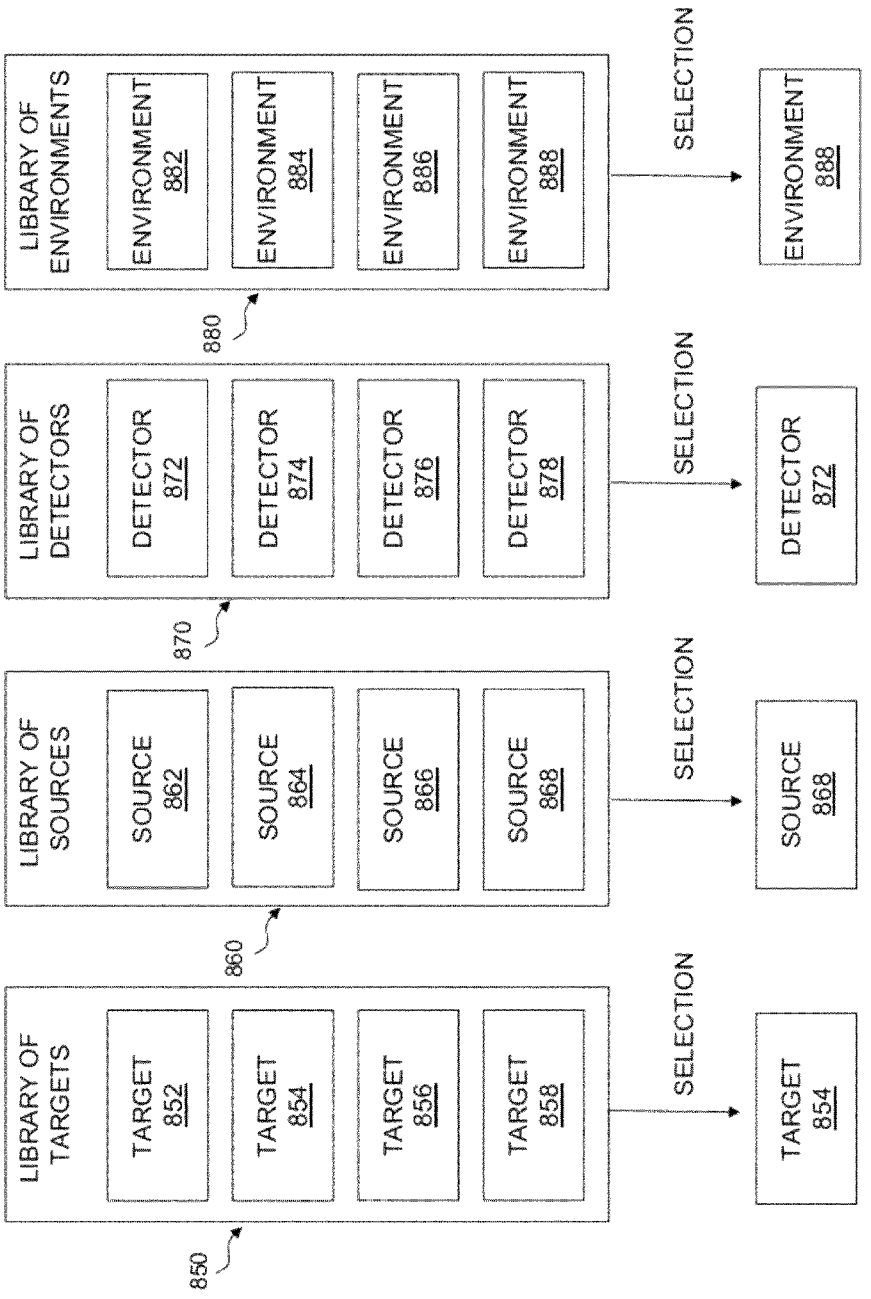
LIBRARY OF TARGETS
TARGET 852
TARGET 854
TARGET 856
TARGET 858
850
LIBRARY OF SOURCES
SOURCE 862
SOURCE 864
SOURCE 866
SOURCE 868
860
LIBRARY OF DETECTORS
DETECTOR 872
DETECTOR 874
DETECTOR 876
DETECTOR 878
870
LIBRARY OF ENVIRONMENTS
ENVIRONMENT 882
ENVIRONMENT 884
ENVIRONMENT 886
ENVIRONMENT 888
880
SELECTION
TARGET 854
SELECTION
SOURCE 868
SELECTION
DETECTOR 872
SELECTION
ENVIRONMENT 888

FIG. 32

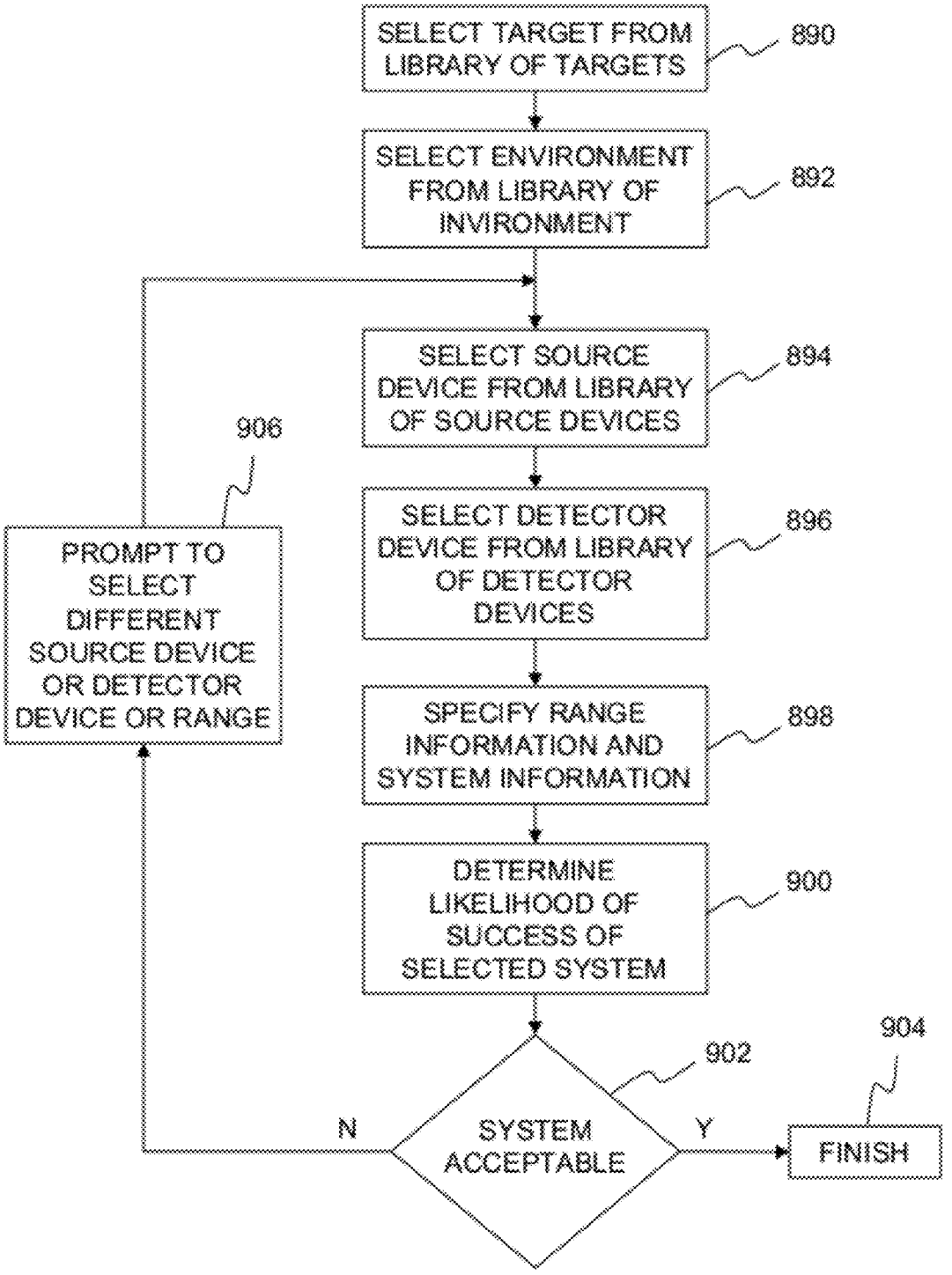
SELECT TARGET FROM LIBRARY OF TARGETS
890
SELECT ENVIRONMENT FROM LIBRARY OF INVIRONMENT
892
SELECT SOURCE DEVICE FROM LIBRARY OF SOURCE DEVICES
894
SELECT DETECTOR DEVICE FROM LIBRARY OF DETECTOR DEVICES
896
SPECIFY RANGE INFORMATION AND SYSTEM INFORMATION
898
DETERMINE LIKELIHOOD OF SUCCESS OF SELECTED SYSTEM
900
SYSTEM ACCEPTABLE
902
N
Y
FINISH
904
PROMPT TO SELECT DIFFERENT SOURCE DEVICE OR DETECTOR DEVICE OR RANGE
906

FIG. 33

USER INTERFACE FOR LASER TARGETING SYSTEM

STATEMENT REGARDING FEDERALLY SPONSORED RESEARCH OR DEVELOPMENT

The invention described herein was made in the performance of official duties by employees of the Department of the Navy and may be manufactured, used and licensed by or for the United States Government for any governmental purpose without payment of any royalties thereon.

RELATED APPLICATIONS

The present application, titled USER INTERFACE FOR LASER TARGETING SYSTEM, is filed concurrently with the following three related applications: U.S. patent application Ser. No. 12/414,717, titled LASER TARGETING SYSTEM, U.S. patent application Ser. No. 12/414,769, titled METHOD AND SYSTEM FOR DETERMINATION OF DETECTION PROBABILITY OF A TARGET OBJECT BASED ON A RANGE, and U.S. patent application Ser. No. 12/414,773, titled METHOD AND SYSTEM FOR DETERMINATION OF DETECTION PROBABILITY OF A TARGET OBJECT BASED ON VIBRATION, the disclosures each of which are expressly incorporated by reference herein.

BACKGROUND OF THE INVENTION

The present invention relates generally to devices for quantifying laser targeting systems, such as laser range finder systems and laser designator systems, and, more particularly, to devices for determining the likelihood of success of a laser targeting system for a given application and the likelihood of detection of a target object with the laser targeting system as a function of range to the target object.

Laser rangefinders are devices which send out a pulsed optical signal with a source. The signal propagates through an environment and reflects off of a target object. The reflected energy, if of sufficient strength, is sensed by a sensing unit of the laser rangefinder. As is known, based on the time difference between the occurrence of sending out the optical signal and sensing the optical signal a range to the target object may be determined.

Laser designators are devices that use a pulse coding system to illuminate a target with a pulsed laser beam having a given code. A tracking device detects laser radiation reflected from the target and verifies the target based on the code contained in the reflected laser radiation. The tracking device then moves to the location of the target to interface with the target. Of course, the target may be a moving target.

Many factors influence whether a laser rangefinder or a laser designator is able to sense a reflected signal from a target object and thus determine a range to the target object or to detect the target object. First, the characteristics of the optical source illuminating the target object including power, beam divergence, and other factors. Second, the characteristics of the environment through which the optical signal passes. Third, the characteristics of the target object itself. Fourth, the characteristics of the sensor system. Fifth, the distance or range to the target object.

The effect of these characteristics may be calculated based on known optical equations. However, the effectiveness of a system on detecting a target object as a function of range or the probability of detecting a target at a given range are difficult to determine. Traditionally, many calculations were performed by a technician to determine the effectiveness of a given system of detecting a target at a given range. Once completed, if any of the above-mentioned characteristics are changed the calculations were performed over again.

SUMMARY OF THE INVENTION

In an exemplary embodiment of the present disclosure, a method for evaluating a target locator system for a mission is provided. Exemplary target locators include laser rangefinder systems, laser designators systems, active or passive remote sensing or surveillance systems for detecting object positions, communication systems, and other suitable systems wherein a laser source is propagated through an environment towards a detector. The method comprising providing a library of laser sources in a memory accessible by the computing system, each of the laser sources in the library of laser sources being capable of providing radiation for illuminating a target object; receiving a selection of a first laser source from the library of laser sources, the first laser source having associated source characteristics; receiving target characteristics of the target object; receiving environment characteristics of an environment surrounding the target object; receiving detection system characteristics of a detection system for detecting the target object; and determining a likelihood of detecting the target object with the detection system when the target object is illuminated by the first laser source. In an example, a computer readable medium includes software for performing the above mentioned method.

In a further embodiment of the present disclosure, a system for evaluating a target locator system for a mission is provided. Exemplary target locators include laser rangefinder systems, laser designators systems, active or passive remote sensing or surveillance systems for detecting object positions, communication systems, and other suitable systems wherein a laser source is propagated through an environment towards a detector. The system comprising a display; at least one user input device; a controller operatively coupled to the display and the at least one input device; a memory accessible by the controller; and laser targeting software stored on the memory for execution by the controller. The laser targeting software including a library of laser sources. Each of the laser sources in the library of laser sources being capable of providing radiation for illuminating a target object. The laser targeting software further including software for determining a likelihood of detecting a target object with a detection system when the target object is illuminated by a first laser source of the library of laser sources, the first laser source being selected through the at least one user input along with target characteristics of the target object, environment characteristics of an environment surrounding the target object, and detection system characteristics of the detection system.

In another exemplary embodiment of the present disclosure, a method for evaluating a target locator system for a mission is provided. Exemplary target locators include laser rangefinder systems, laser designators systems, active or passive remote sensing or surveillance systems for detecting object positions, communication systems, and other suitable systems wherein a laser source is propagated through an environment towards a detector. The method comprising providing a library of detection systems in a memory accessible by the computing system, each of the detection systems in the library of detection systems being capable of receiving radiation from a target object; receiving a selection of a first detection system from the library of detection systems, the first detection system having associated detection system characteristics; receiving target characteristics of the target object; receiving environment characteristics of an environment sur-

rounding the target object; receiving laser source characteristics of a laser source for illuminating the target object; and determining a likelihood of detecting the target object with the first detection system when the target object is illuminated by the laser source. In an example, a computer readable medium includes software for performing the above mentioned method.

In yet a further embodiment of the present disclosure, a system for evaluating a target locator system for a mission is provided. Exemplary target locators include laser rangefinder systems, laser designators systems, active or passive remote sensing or surveillance systems for detecting object positions, communication systems, and other suitable systems wherein a laser source is propagated through an environment towards a detector. The system comprising a display; at least one user input device; a controller operatively coupled to the display and the at least one input device; a memory accessible by the controller; and laser targeting software stored on the memory for execution by the controller. The laser targeting software including a library of detection systems. Each of the detection systems in the library of detection systems being capable of receiving radiation from a target object. The laser targeting software further including software for determining a likelihood of detecting a target object with a first detection system of the library of detection systems when the target object is illuminated by a laser source, the first detection system being selected through the at least one user input along with target characteristics of the target object, environment characteristics of an environment surrounding the target object, and laser source characteristics of the laser source.

In yet another exemplary embodiment of the present disclosure, a method for evaluating a target locator system for a mission is provided. Exemplary target locators include laser rangefinder systems, laser designators systems, active or passive remote sensing or surveillance systems for detecting object positions, communication systems, and other suitable systems wherein a laser source is propagated through an environment towards a detector. The method comprising receiving laser source characteristics of a laser source; providing a library of target objects in a memory accessible by the computing system, each of the target objects in the library of target objects being capable of reflecting radiation from the laser source; receiving a selection of a first target object from the library of target objects, the first target object having associated target object characteristics; receiving environment characteristics of an environment surrounding the first target object; receiving detection system characteristics of a detection system for detecting the first target object; and determining a likelihood of detecting the first target object with the detection system when the first target object is illuminated by the laser source.

In still a further embodiment of the present disclosure, a system for evaluating a target locator system for a mission is provided. Exemplary target locators include laser rangefinder systems, laser designators systems, active or passive remote sensing or surveillance systems for detecting object positions, communication systems, and other suitable systems wherein a laser source is propagated through an environment towards a detector. The system comprising a display; at least one user input device; a controller operatively coupled to the display and the at least one input device; a memory accessible by the controller; and laser targeting software stored on the memory for execution by the controller. The laser targeting software including a graphical user interface presented on the display. The graphical user interface including a first portion presenting at least one input having a plurality of selectable values for at least one source characteristic of a laser source; a second portion presenting at least one input for at least one detector characteristic of a detection system; a third portion presenting at least one input having a plurality of selectable values for at least one target characteristic of a target object; a fourth portion presenting at least one input having a plurality of selectable values for at least one environment characteristic of an environment surrounding the target object; and a fifth portion presenting at least one input for a range of at least one of from the laser source to the target object and from the target object to the detection system. The laser targeting software further including processing sequences to determine an amount of energy emitted by the laser source that is received by detection system subsequent to an interaction with the target object, wherein at least one of the at least one source characteristic, the at least one detector characteristic, the at least one target characteristic, the at least one environment characteristic, and the range is adjustable through the graphical user interface.

In still another embodiment of the present disclosure, a system for evaluating a target locator system for a mission is provided. Exemplary target locators include laser rangefinder systems, laser designators systems, active or passive remote sensing or surveillance systems for detecting object positions, communication systems, and other suitable systems wherein a laser source is propagated through an environment towards a detector. The system comprising a display; at least one user input device; a controller operatively coupled to the display and the at least one input device; a memory accessible by the controller; and laser targeting software stored on the memory for execution by the controller. The laser targeting software including a graphical user interface presented on the display, the graphical user interface including a first portion presenting at least one input for at least one source characteristic of a laser source; a second portion presenting at least one input for at least one detector characteristic of a detection system; a third portion presenting at least one input for at least one target characteristic of a target object; and a fourth portion presenting at least one input for at least one environment characteristic of an environment surrounding the target object. The laser targeting software further including processing sequences to determine a probability of detection of the target object illuminated by the laser source with the detection system over a plurality of ranges from the target object to the detection system, the probability of detection being based on the at least one source characteristic, the at least one detector characteristic, the at least one target characteristic, and the at least one environment characteristic.

In yet still a further exemplary embodiment of the present disclosure, a system for evaluating a target locator system is provided. Exemplary target locators include laser rangefinder systems, laser designators systems, active or passive remote sensing or surveillance systems for detecting object positions, communication systems, and other suitable systems wherein a laser source is propagated through an environment towards a detector. The system comprising a display; at least one user input device; a controller operatively coupled to the display and the at least one input device; a memory accessible by the controller; and laser targeting software stored on the memory for execution by the controller. The laser targeting software including a graphical user interface presented on the display, the graphical user interface including a first portion presenting at least one input for at least one source characteristic of a laser source; a second portion presenting at least one input for at least one detector characteristic of a detection system; a third portion presenting at least one input for at least one target characteristic of a target object; a fourth portion presenting at least one input for at least one environment char-

acteristic of an environment surrounding the target object; and a fifth portion presenting at least one input for at least one target locator system vibration characteristic. The laser targeting software further including processing sequences to determine an effect of vibration of the target locator system on a detection of the target object illuminated by the laser source with the detection system, the effect of vibration being based on the at least one source characteristic, the at least one detector characteristic, the at least one target characteristic, the at least one environment characteristic, and the at least one target locator system vibration characteristic.

In a further exemplary embodiment of the present disclosure, a system for evaluating a target locator system for a mission is provided. Exemplary target locators include laser rangefinder systems, laser designators systems, active or passive remote sensing or surveillance systems for detecting object positions, communication systems, and other suitable systems wherein a laser source is propagated through an environment towards a detector. The system comprising: a display; at least one user input device; a controller operatively coupled to the display and the at least one input device; a memory accessible by the controller; and laser targeting software stored on the memory for execution by the controller. The laser targeting software including a library of target objects. Each of the target objects in the library of target objects having associated reflectivity characteristics. The laser targeting software further including software for determining a likelihood of detecting a first target object of the library of target objects with a detection system when the target object is illuminated by a laser source of the library of laser sources. The first target object being selected through the at least one user input along with laser source characteristics of the laser source, environment characteristics of an environment surrounding the first target object, and detection system characteristics of the detection system.

In yet a further exemplary embodiment of the present disclosure, a method for evaluating a target locator system is provided. Exemplary target locators include laser rangefinder systems, laser designators systems, active or passive remote sensing or surveillance systems for detecting object positions, communication systems, and other suitable systems wherein a laser source is propagated through an environment towards a detector. The method comprising the steps of: presenting through a first portion of a graphical user interface presented on a display at least one input having a plurality of selectable values for at least one source characteristic of a laser source; receiving through the first portion of the graphical user interface a selection of a first one of the plurality of selectable values for the at least one source characteristic of a laser source; presenting through a second portion of the graphical user interface presented on the display at least one input for at least one detector characteristic of a detection system; receiving through the second portion of the graphical user interface a first input for the at least one detector characteristic of the detection system; presenting through a third portion of the graphical user interface presented on the display at least one input having a plurality of selectable values for at least one target characteristic of a target object; receiving through the third portion of the graphical user interface a selection of a first one of the plurality of selectable values for the at least one target characteristic of a target object; presenting through a fourth portion of the graphical user interface presented on the display at least one input having a plurality of selectable values for at least one environment characteristic of an environment surrounding the target object; receiving through the fourth portion of the graphical user interface a selection of a first one of the plurality of selectable values for the at least one environment characteristic of the environment; presenting through a fifth portion at least one input for a range of at least one of from the laser source to the target object and from the target object to the detection system; receiving through the fifth portion a first input for the range of the at least one of from the laser source to the target object and from the target object to the detection system; and determining an amount of energy emitted by the laser source that is received by the detection system subsequent to an interaction with the target object.

In yet still a further exemplary embodiment, a target locator system is provided. Exemplary target locators include laser rangefinder systems, laser designators systems, active or passive remote sensing or surveillance systems for detecting object positions, communication systems, and other suitable systems wherein a laser source is propagated through an environment towards a detector. The target locator system comprising: a laser source; a power source operatively coupled to the laser source to power the laser source; a controller operatively coupled to the power source to control a power level of the laser source; a memory accessible by the controller; and a laser targeting software stored on the memory for execution by the controller. The laser targeting software including a graphical user interface presented on the display. The graphical user interface including: a first portion presenting at least one input for at least one detector characteristic of a detection system; a second portion presenting at least one input for at least one target characteristic of a target object; a third portion presenting at least one input for at least one environment characteristic of an environment surrounding the target object; and a fourth portion presenting at least one input corresponding to a range relative to the target object. The laser targeting software including processing sequences to determine a probability of detection of the target object illuminated by the laser source at a first power level with the detection system at a specified range input with the fourth portion. The controller adjusts the power level of the laser source based on the probability of detection being below a threshold value.

In still another exemplary embodiment of the present disclosure, a method of operating a target locator system having a laser source is provided. Exemplary target locators include laser rangefinder systems, laser designators systems, active or passive remote sensing or surveillance systems for detecting object positions, communication systems, and other suitable systems wherein a laser source is propagated through an environment towards a detector. The method comprising the steps of: receiving at least one target characteristic of a target object which is to be illuminated by laser energy from the laser source; receiving at least one detector characteristic of a detector of a detection system which is to be detecting the laser energy from the laser source reflected by the target object; receiving at least one environment characteristic of an environment surrounding the target object; receiving a first range relative to the target object; and automatically determining with a computer processor based on the at least one target characteristic, the at least one detector characteristic, the at least one environment characteristic, and the first range a probability of detection of the target object illuminated by the laser source at a first power level with the detection system at the first range.

In yet another exemplary embodiment of the present disclosure, a method of operating a target locator system is provided. Exemplary target locators include laser rangefinder systems, laser designators systems, active or passive remote sensing or surveillance systems for detecting object positions, communication systems, and other suitable systems wherein

a laser source is propagated through an environment towards a detector. The method comprising the steps of: receiving at least one laser characteristic of a laser source; receiving at least one target characteristic of a target object which is to be illuminated by laser energy from the laser source; receiving at least one detector characteristic of a detector of a detection system which is to be detecting the laser energy from the laser source reflected by the target object; receiving at least one environment characteristic of an environment surrounding the target object; receiving a first range relative to the target object; receiving at least one vibration characteristic of the target locator system; and automatically determining with a computer processor based on the at least one laser source characteristic; the at least one target characteristic, the at least one detector characteristic, the at least one environment characteristic, the first range, and the at least one vibration characteristic a probability of detection of the target object illuminated by the laser source with the detection system at the first range.

BRIEF DESCRIPTION OF THE DRAWINGS

The foregoing aspects and many of the attendant advantages of this invention will become more readily appreciated as the same become better understood by reference to the following detailed description when taken in conjunction with the accompanying drawings.

FIG. **1** is a representative view of an exemplary computing system including laser targeting software;

FIG. **2** is a representative view of an exemplary laser rangefinder application;

FIG. **3** is a representative view of an exemplary laser designator application;

FIG. **3**A is a representative view of an exemplary remote sensing application;

FIG. **4** is a representative view of an exemplary graphical user interface of the laser targeting software of FIG. **1**;

FIG. **5** is a representative view of an exemplary laser source input module of the graphical user interface of FIG. **4**;

FIG. **6** is a representative view of the information stored on a memory accessible by the computing system of FIG. **1** relative to the exemplary laser source input module of FIG. **5**;

FIG. **7** is a representative view of the information stored on a memory accessible by the computing system of FIG. **1** relative to a library of laser sources;

FIG. **8** is a representative view of an exemplary detector input module of the graphical user interface of FIG. **4**;

FIG. **9** a representative view of the information stored on a memory accessible by the computing system of FIG. **1** relative to the exemplary detector input module of FIG. **8**;

FIG. **10** is a representative view of the information stored on a memory accessible by the computing system of FIG. **1** relative to a library of detection systems;

FIG. **11** is a representative view of an exemplary target object input module of the graphical user interface of FIG. **4**;

FIG. **12** a representative view of the information stored on a memory accessible by the computing system of FIG. **1** relative to the exemplary target object input module of FIG. **11**;

FIG. **13** is a representative view of the information stored on a memory accessible by the computing system of FIG. **1** relative to a library of target objects;

FIG. **14** is a representative view of an exemplary environment input module of the graphical user interface of FIG. **4**;

FIG. **15** a representative view of the information stored on a memory accessible by the computing system of FIG. **1** relative to the exemplary environment input module of FIG. **14**;

FIG. **16** is a representative view of an exemplary pointing error input module of the graphical user interface of FIG. **4**;

FIG. **17** a representative view of the information stored on a memory accessible by the computing system of FIG. **1** relative to the exemplary pointing error input module of FIG. **16**;

FIG. **18** is a representative view of an exemplary source to target range input module of the graphical user interface of FIG. **4**;

FIG. **19** is a representative view of an exemplary detector to target range input module of the graphical user interface of FIG. **4**;

FIG. **20** a representative view of the information stored on a memory accessible by the computing system of FIG. **1** relative to the exemplary source to target range input module of FIG. **18** and relative to the exemplary detector to target range input module of FIG. **19**;

FIG. **21** is a representative view of an exemplary minimum flux input module of the graphical user interface of FIG. **4**;

FIG. **22** is a representative view of the information stored on a memory accessible by the computing system of FIG. **1** relative to the exemplary minimum flux input module of FIG. **21** and relative to the exemplary energy on target output module of FIG. **29** and additional determined variables;

FIG. **23** is a representative view of the value of the transmission percentage variable of FIG. **15** as a function of the value of the altitude variable of FIG. **15** based on the value of the visibility variable of FIG. **15**;

FIG. **24** is a representative view of an exemplary target irradiance output module of the graphical user interface of FIG. **4**;

FIG. **25** is a representative view of an exemplary software control input module of the graphical user interface of FIG. **4**;

FIG. **26** is a representative view of an exemplary detection probability output module of the graphical user interface of FIG. **4**;

FIG. **27** is a representative view of an exemplary detection expectation over a range output module of the graphical user interface of FIG. **4**;

FIG. **28** is a representative view of an exemplary laser spot alignment output module of the graphical user interface of FIG. **4**;

FIG. **29** is a representative view of an exemplary energy on target output module of the graphical user interface of FIG. **4**;

FIG. **30** is a representative view of an exemplary auxiliary output module of the graphical user interface of FIG. **4**;

FIG. **31** is a representative view of an information window displayed in response to a selection of a radiometric values input of the exemplary auxiliary output module of FIG. **30**;

FIG. **32** a representative view of the information stored on a memory accessible by the computing system of FIG. **1** including a library of targets including information regarding a plurality of targets, a library of sources including information regarding a plurality of sources, a library of detectors including information regarding a plurality of detectors, and a library of environments including information regarding a plurality of environments; and

FIG. **33** illustrates an exemplary mission planning method.

Corresponding reference characters indicate corresponding parts throughout the several views. Although the drawings represent embodiments of various features and components according to the present disclosure, the drawings are not necessarily to scale and certain features may be exaggerated

in order to better illustrate and explain the present disclosure. The exemplification set out herein illustrates embodiments of the invention, and such exemplifications are not to be construed as limiting the scope of the invention in any manner.

DETAILED DESCRIPTION OF THE DRAWINGS

For the purposes of promoting an understanding of the principles of the invention, reference will now be made to the embodiments illustrated in the drawings, which are described below. The embodiments disclosed below are not intended to be exhaustive or limit the invention to the precise form disclosed in the following detailed description. Rather, the embodiments are chosen and described so that others skilled in the art may utilize their teachings. It will be understood that no limitation of the scope of the invention is thereby intended. The invention includes any alterations and further modifications in the illustrated devices and described methods and further applications of the principles of the invention which would normally occur to one skilled in the art to which the invention relates.

Referring to FIG. **1**, a computing system **100** is shown. Computing system **100** may be a general purpose computer, a portable computing device, or a computing device coupled to or integrated with a moveable support **102**. In one embodiment, computing system **100** is a stand alone computing device. Exemplary stand alone computing devices include a general purpose computer, such as a desktop computer, a laptop computer, and a tablet computer. In one embodiment, computing system **100** is a computing system associated with a moveable support **102**. Exemplary moveable supports include powered vehicles, such as cars, trucks, boats, aircraft, and other types of moveable supports. Although the computing system **100** is coupled to a moveable support **102**, the moveable support may be either stationary or moving during use of the software described herein. In this embodiment, computing system **100** may be a part of moveable support **102** or may be a stand alone computing device which is capable of communicating with moveable support **102**. Although computing system **100** is illustrated as a single computing system, it should be understood that multiple computing systems may be used together, such as over a network or other methods of transferring data.

Computing system **100** has access to a memory **104** which is accessible by a controller **106** of computing system **100**. Exemplary controllers include computer processors. Controller **106** executes software **108** stored on the memory **104**. Memory **104** is a computer readable medium and may be a single storage device or may include multiple storage devices, located either locally with computing system **100** or accessible across a network. Computer-readable media may be any available media that may be accessed by controller **106** of computing system **100** and includes both volatile and non-volatile media. Further, computer readable-media may be one or both of removable and non-removable media. By way of example, computer-readable media may include, but is not limited to, RAM, ROM, EEPROM, flash memory or other memory technology, CD-ROM, Digital Versatile Disk (DVD) or other optical disk storage, magnetic cassettes, magnetic tape, magnetic disk storage or other magnetic storage devices, or any other medium which may be used to store the desired information and which may be accessed by computing system **100**.

Memory **104** includes operating system software **110**. An exemplary operating system software is a WINDOWS operating system available from Microsoft Corporation of Redmond, Wash. Memory **104** further includes communications software **112**, if computing system **100** has access to a network, such as a local area network, a public switched network, a CAN network, any type of wired network, and any type of wireless network. An exemplary public switched network is the Internet. Exemplary communications software **112** includes e-mail software, internet browser software, and other types of software which permit computing system **100** to communicate with other devices across a network.

Memory **104** further includes laser targeting software **114**. Although described as software, it is understood that at least portions of the laser targeting software **114** may be implemented as hardware. As explained herein, laser targeting software **114** based on a plurality of inputs determines a likelihood of a detector accurately detecting a target object. Also, as explained herein laser targeting software **114** may reference one or more of a library of target objects **116**, a library of laser sources **118**, a library of detector systems **120**, and a library of environments **122**. In each of these libraries, characteristics of actual physical objects are provided. In one embodiment, the characteristics are representative of a physical object that represents a group.

Laser targeting software **114** may be used to model a laser rangefinder application **150**. An exemplary laser range finder application **150** is shown in FIG. **2**. Referring to FIG. **2**, a laser rangefinder device **152** is represented. Laser rangefinder device **152** includes a laser source **154**, a power source **155**, a controller **156**, and a detector **158**. Controller **156** is operatively coupled to power source **155** which controls the operation of laser source **154** and detector **158**. In one embodiment, power source **155** is a pumping unit. Laser source **154**, power source **155**, controller **156**, and detector **158** may be housed in a single housing **160** having optical windows for laser source **154** to emit radiation (window **155**) and for detector **158** to receive radiation (window **159**).

Laser rangefinder device **152** may be coupled to or included as a component of a support **162**. Exemplary supports include powered moveable supports, such as vehicles, boats, aircraft, and stationary supports, such as a tripod.

Under the control of controller **156**, laser source **154** emits a pulsed laser signal **164** (referred to herein as "Target Signal"). In one embodiment, the Target Signal **164** is a repetitive burst of energy at spaced apart instances. In one embodiment, the Target Signal **164** includes a code. In one example, the code is modulated on the Target Signal **164**. In one example, the code is provided by the spacing of various bursts of energy of the Target Signal **164**.

A first portion **166** of pulsed laser signal **164** is incident on a target object **168**. A portion of this first portion **166** is reflected by target object **168**. This reflected energy may be a specular reflection and/or a diffuse reflection based on the characteristics of target object **168**. As shown in FIG. **2**, a portion of the reflected energy **170** (referred to herein as "Reflected Target Signal") travels towards detector **158**. The reflected energy, if of sufficient strength, is detected by detector **158**. Based on the time of flight of Target Signal **164** and Reflected Target Signal **170**, controller **156** is able to determine a range to target object **168** through laser ranging software **159**.

However, many factors may limit or prevent Target Signal **164** reaching target object **168** or Reflected Target Signal **170** reaching detector **158**. Examples include the characteristics of the laser source **154** and the associated optics of laser rangefinder **152**, the characteristics of target object **168**, the characteristics of an environment **167** that the radiation travels through from the laser rangefinder **152** to the target object **168** and back, the characteristics of detector **158** and the associated optics of laser rangefinder **152**, and the distance

between the laser rangefinder **152** and the target object **168**. The laser targeting software **114**, as explained herein, provides a user with the ability to predict the likelihood of laser rangefinder device **152** in detecting target object **168**.

In one embodiment, laser rangefinder device **152** includes laser targeting software **114**. Controller **156** is part of a computing system **100** and based on the information provided through laser targeting software **114**, controller **156** controls power source **155**. For instance, controller **156** may instruct power source **155** to increase the power level provided to laser source **154** to increase the likelihood of detecting a range to target object **168** with detector **158**. In one embodiment, controller **156** instructs power source **155** to raise the output power of laser source **154** up to a first threshold. In one embodiment, the first threshold is set to minimize potential damage to the eyes of an operator of laser rangefinder device **152** due to the power output of laser source **154** being raised to high.

In one embodiment, laser rangefinder device **152** is used to sense changes in position of target object **168** and as such operates as a remote sensing system **151** (see FIG. **3**A). In this embodiment, remote sensing system **151** includes position monitoring software **159** which in addition to determining a range to target object **168** also tracks the movement (positional changes) in target object **168** over time. Remote sensing system **151** may have many applications including volcano surveillance systems to detect movement of crater segments, off shore drilling rig systems to track the movement of portions of the rig which may indicate damage to the rig, and other systems for recording positional changes in an object.

Laser targeting software **114** may also be used to model a laser designator application **180**. An exemplary laser designator application **180** is shown in FIG. **3**. Referring to FIG. **3**, a laser designator device **182** is represented. Laser designator device **182** includes a laser source **154** and a controller **186**. Controller **186** is operatively coupled to laser source **154** and controls the operation thereof. Laser source **184** and controller **186** may be housed in a single housing **188** having an optical window **185** for laser source **184** to emit radiation.

Laser designator device **182** may be coupled to or included as a component of a support **190**. Exemplary supports include powered moveable supports, such as vehicles, boats, aircraft, and stationary supports, such as a tripod or handheld device.

Under the control of controller **186**, laser source **184** emits a pulsed laser signal **192** (referred to herein as "Target Signal"). In one embodiment, the Target Signal **192** is a repetitive burst of energy at spaced apart instances. In one embodiment, the Target Signal **192** includes a code. In one example, the code is modulated on the Target Signal **192**. In one example, the code is provided by the spacing of various bursts of energy of the Target Signal **192**.

A first portion **194** of pulsed laser signal **192** is incident on a target object **168**. A portion of this first portion **194** is reflected by target object **168**. This reflected energy may be a specular reflection and/or a diffuse reflection based on the characteristics of target object **168**. As shown in FIG. **3**, a portion of the reflected energy **196** (referred to herein as "Reflected Target Signal") travels towards a tracking device **198**. Tracking device **198** includes a detector **200** and a controller **202**. The reflected energy **196**, if of sufficient strength, is detected by detector **200** through optical window **201** and recognized by controller **202** as a target object. Tracking device **198** is included as part of or coupled to a moveable support **204**. Controller **202** through tracking software **201** provides instructions to a directional control assembly **203** of support **204** and a prime mover **205** of support **204** to control the movement of moveable support **204**. In other embodiment, moveable support **204** includes a separate controller and controller **202** input to the controller of moveable support **204** which controls the movement of the moveable support by directional control assembly **203** and prime mover **205**. In general, tracking device **198** tracks the location of target object **168** and moves in a direction towards the location of target object **168**. Exemplary directional control assembly **203** include wings, blades, steering assemblies, and other devices for controlling a direction of moveable support **204**. As is known in the art, these type of directional control assemblies alter a direction of travel of a moveable support. Exemplary prime mover **205** include internal combustion engines, electric motors, hybrid motors, solid fuel engines, jet turbine engines, or other devices which power the movement of tracking device **198**. As is known in the art, these type of prime movers propel and alter a speed of travel of a moveable support.

In one embodiment, laser targeting software **114** may be used to determine the detectability between a communication transmitter and a communication receiver. In this scenario, target object **168** may be modeled as a perfect reflector and sized to prevent spillover.

Just like the laser rangefinder application **150**, many factors may limit or prevent Target Signal **164** reaching target object **168** or Reflected Target Signal **170** reaching tracking device **198**. Examples include the characteristics of the laser source **184** and the associated optics of laser designator **182**, the characteristics of target object **168**, the characteristics of an environment **197** that the radiation travels through from the laser designator **182** to the target object **168** and then to tracking device **198**, the characteristics of detector **200** and the associated optics of tracking device **198**, the distance between the laser designator **182** and the target object **168**, and the distance between the target object **168** and the tracking device **198**. The laser targeting software **114**, as explained herein, provides a user with the ability to predict the likelihood of tracking device **198** in detecting target object **168**.

In one embodiment, laser designator device **182** includes laser targeting software **114**. Controller **186** is part of a computing system **100** and based on the information provided through laser targeting software **114**, controller **186** controls a power source **185**. For instance, controller **186** may instruct power source **185** to increase the power level provided to laser source **184** to increase the likelihood of detecting a range to target object **168** with detector **200**. In one embodiment, controller **186** instructs power source **185** to raise the output power of laser source **184** up to a first threshold.

Referring to FIG. **4**, a user interface **300** of laser targeting software **114** is shown. User interface **300** is a graphical user interface displayed on a display **130** of computing system **100**. Through an interaction with user interface **300** a user is able to specify parameters for one of laser rangefinder application **150** and laser designator application **180** through at least one user input devices **132**. Exemplary user input devices **132** include buttons, knobs, keys, switches, a mouse, a touch screen, a roller ball, and other suitable devices for providing an input to computing system **100**.

User interface **300** includes a plurality of input modules **302** and a plurality of output modules **304**. In the illustrated embodiment, input modules **302** include a laser source input module **306**, a detector input module **308**, a target object input module **310**, an environment input module **312**, a pointing error input module **314**, a source to target range input module **316**, a detector to target range input module **318**, and a minimum flux input module **320**, a software control input module **322**. Exemplary output modules include an auxiliary output

module **324**, a detection probability output module **326**, a detection expectation over a range output module **328**, a target irradiance output module **330**, a laser spot alignment output module **332**, and an energy on target output module **334**.

Referring to FIG. **5**, an exemplary laser source input module **306** is shown. In the illustrated embodiment, laser source input module **306** includes five inputs, wavelength input **340**, beam divergence input **342**, initial beam diameter input **344**, pulse width input **346**, and pulse energy input **348**. Each of inputs **340-348** may be any type of selection input whereby a user of user interface **300** may enter or select information, such as list boxes, drop-down lists, option buttons, toggles, check boxes, command buttons, entry fields, and other suitable selection inputs.

Wavelength input **340** permits the operator to enter a wavelength of laser source **154** of the laser rangefinder application **150** or laser source **184** of the laser designator application **180**. Illustratively wavelength input **340** is a drop-down list. An operator selects expander input **350** to open the drop down list and show the various wavelengths for selection. The operator then highlights the desired wavelength. For inputs **342-348**, an operator may enter a value in the respective entry fields **352-358** or adjust the displayed value up or down by a preset increment with the respective adjustment inputs **362-368**.

Referring to FIG. **6**, a representation of the data stored on memory **104** related to laser source input module **306** is shown. Five variables **370-378** are shown. Variable **370** corresponds to the input made through input **340** and is a word unsigned integer number (U16) that corresponds to an array value. Variable **370** is provided to or called by laser targeting software **114** which then looks for the corresponding wavelength value of a wavelength variable **379** in an array **380**. Array **380** represents a library of wavelengths **381**. In the illustrated example, the value of laser wavelength variable **370** is 1 and the corresponding value for wavelength variable **379** returned from array **380** is a double precision, floating point number (DBL) with a value of 1.06411 microns.

Variables **372-378** correspond to the inputs made through input **342-348**. Variable **372** corresponds to the beam divergence of the laser source in micro-radians and variable **374** corresponds to the initial beam diameter of the laser source in millimeters. As a laser beam propagates from its source, the diameter of the laser beam increases or diverges from its initial beam diameter. With knowledge of the beam divergence angle (value of beam divergence variable **372**), the diameter of the laser beam at the source (value of initial beam diameter variable **374**), and the distance from the laser source to the target object **168** (value of laser to target variable **610** in FIG. **20**), the area of the laser beam at the target object (value of spot area variable **682** in FIG. **22**) may be determined.

Variable **376** specifies a pulse width of the laser source in nana-seconds. The pulse width of the laser source corresponds to the full width, half maximum (FWHM) of optical power vs. time for the laser source. As the pulse width or duration is shortened, the peak power of the pulse is increased.

Variable **378** specifies the pulse energy of the laser source in milli-Joules. The pulse energy is the total optical energy content of a pulse. For single pulses the pulse energy may be measured (e.g. with a pyro-electric device). The pulse energy (value of variable **378**) together with the pulse duration (value of variable **376**) may be used to estimate the peak power of pulses. Further, temporal integration of the optical power may be used to provide a value of the pulse energy. Typical pulse energies from Q-switched lasers range from micro joules (μj) to milli joules (mj) for large systems to even kilojoules (kj). Variables **372-378** are provided to or called by laser targeting software **114**.

Referring to FIG. **7**, in one embodiment, a user through a selection input, such as a drop down list, selects a laser source from a library of possible laser sources. In this example, an operator provides a value for a single variable **382** based on the input made through the selection input. Variable **382** is a word unsigned integer number (U16) that corresponds to an array value. Variable **382** is provided to or called by laser targeting software **114** which then looks for the corresponding source variable values in an array **384**. Array **384** represents a library of sources **386**.

Referring to FIG. **8**, an exemplary detector input module **308** is shown. In the illustrated embodiment, detector input module **308** includes four inputs, receiving diameter input **390**, NEF/NEP input **392**, transmission optics input **394**, and rangefinder gate input **396**. Each of inputs **390-396** may be any type of selection input whereby a user of user interface **300** may enter information, such as list boxes, drop-down lists, option buttons, toggles, check boxes, command buttons, entry fields, and other suitable selection inputs.

Each of inputs **390-396**, permit an operator to enter a value in the respective entry fields **408-414** or adjust the displayed value up or down by a preset increment with the respective adjustment inputs **400-406**.

Referring to FIG. **9**, a representation of the data stored on memory **104** related to detector input module **308** is shown. Four variables **420-426** are shown. Variable **420** corresponds to the input made through input **390** and is a double-precision, floating-point number (DBL). In the illustrated example, the value of input **390** is 7 centimeters (cm). Based on the value of input **390**, laser targeting software **114** determines a value of a receiving area variable **428** which is displayed in region **398** of detector input module **308**. In the illustrated embodiment, the receiving area is assumed to be circular and is determined by laser targeting software **114** based on equation (1):

$$A_C = \frac{d^2}{4}\pi \tag{1}$$

wherein A_C is the value of receiving area variable **428** and d is the value of variable **420**. The value of receiving area variable **428** is used to evaluate the optical throughput of the system (a figure of merit for the optical subsystem) and the solid angle subtended. The solid angle that an object subtends at a point is a measure of how big that object appears to an observer at that point. For instance, a small object nearby could subtend the same solid angle as a large object far away. The solid angle is proportional to a surface area of a projection of that object onto a sphere centered at that point and divided by the square of the sphere's radius. A solid angle is related to the surface area of a sphere in the same way an ordinary angle is related to the circumference of a circle. In one embodiment, the solid angle is determined by laser targeting software **114** based on equation (2):

$$\Omega = \frac{A_C}{R_{TtoD}^2} \tag{2}$$

wherein R_{TtoD} is the distance from target object **168**, which acts as a source, and the detector (value of variable **621** in FIG. **20**) and A_C which is the receiving area of the detector

(value of variable **428**). The determined solid angle is stored as the value of a solid angle variable **429**. The relationship of equation 2 assumes that R_{TtoD} is greater than 10 to 20 times the maximum transverse dimension of the aperture or the source as defined by the sensor field of view.

Variable **422** corresponds to the NEP of the detector and is a DBL. Detector performances can be described in terms of a various figures of merit (such as the Responsively, Noise Equivalent Power ("NEP"), or Detectivity). NEP may be interpreted in three ways: 1) the smallest detectable change in the average radiant flux that can be detected, 2) the smallest average value of the absolute radiant flux that can be detected, and 3) the signal-to-noise ratio for a given average flux level. The value of variable **422** is either provided by the detector manufacturer or determined empirically.

Variable **424** corresponds to the transmission optics of the detector which collect the light from the target object **168** and is a DBL. Variable **424** is a representation of the losses caused by the optics of the detector device. The transmission value must be between 0.0 and 1.0. For instance, if the optics result in a five percent loss then the value of variable **424** should be set to 0.95. The value of variable **422** is either provided by the detector manufacturer or determined empirically.

Variable **426** corresponds to the range gate and is a DBL. A range gate value is typically specified for the laser rangefinder application **150**. The range gate corresponds to a maximum range at which a valid target **168** will be accepted by laser targeting software **114**. A target **168** detected at a distance above the value of the range gate will be discarded as being outside of the locating region. This value determines the gating in which laser targeting software **114** will accept a return pulse. The range gate is used to determine the value of the T/N variable **672** in equation **15** as described herein which in turn is used to determine the value of the detection probability variable **674** in equation 16 as described herein. In one embodiment, the value of variable **426** is from 0.0 to 30.0 kilometers (km). Laser targeting software **114** interprets a zero value for variable **426** as no range gate value is specified.

Referring to FIG. **10**, in one embodiment, a user through a selection input, such as a drop down list, selects a detector device from a listing of possible detector devices. In this example, an operator provides a value for a single variable **430** corresponding to the input made through the selection input. Variable **430** is a word unsigned integer number (U16) that corresponds to an array value. Variable **430** is provided to or called by laser targeting software **114** which then looks for the corresponding detector variable values in an array **432**. Array **432** represents a library of detectors **434**.

Referring to FIG. **11**, an exemplary target object input module **310** is shown. In the illustrated embodiment, target object input module **310** includes three inputs: target surface input **440**, target type input **442**, and target angle input **444**. As mentioned herein, target object input module **310** further includes three user defined inputs: reflectivity input **446**, target width input **448**, and target height input **450**. Each of inputs **440**-**450** may be any type of selection input whereby a user of user interface **300** may enter information, such as list boxes, drop-down lists, option buttons, toggles, check boxes, command buttons, entry fields, and other suitable selection inputs.

Target surface input **440** permits the operator to enter a characteristic of the reflective nature of target object **168**. Illustratively target surface input **440** is a drop-down list. An operator selects expander input **452** to open the drop down list and show the various target surfaces for selection. The operator then highlights the desired target surface. In one embodiment, the available selections for input **440** are: Snow, White Masonry, Evergreen Trees, Broadleaf Trees, Beach Sand, Rough Wood, Smooth Concrete, Asphalt, Olive Drab Paint, Lava, Black Rubber, and User Defined. Each of the target surface input selections have a different Lambertian surface reflectivity value associated with the option selected. The reflectivity value is wavelength dependent.

Referring to FIG. **12**, a representation of the data stored on memory **104** related to target object input module **310** is shown. A target surface variable **460** is shown which corresponds to the input made through target surface input **440**. Variable **460** is a word unsigned integer number (U16) that corresponds to an array value. Variable **460** is provided to or called by laser targeting software **114** which then looks for the corresponding reflectivity value for a reflectivity variable **462** in an array **464**. Array **464** represents a library of target reflectivity **466**. As mentioned herein, the reflectivity of a target object is wavelength dependent. As such, laser targeting software **114** needs to both know the value of target surface variable **460** and wavelength variable **379** to select the correct value for reflectivity variable **462**. In the illustrated example, the value of variable **460** is 1 and the value of variable **379** is 1.06411 (from FIG. **6**). Based on these values the value of reflectivity variable **462** returned from array **464** is a double precision, floating point number (DBL) with a value of 0.12 or 12 percent. This value is displayed in input **446** of target object input module **310**.

The "User Defined" option for target surface variable **460** selected through target surface input **440** signals to laser targeting software **114** to accept a value entered through input **446** as the value of reflectivity variable **462**. This is illustrated in FIG. **12** as user defined reflectivity variable **468** which is a DBL. This allows a user to specify a specific reflectivity surface value when one of the available options for input **440** is not acceptable or where a particular reflectivity value has been empirically determined. The value of user defined reflectivity variable **468** is in the range of 0 to 1 and corresponds to a reflectivity of between 0% and 100%.

Target type input **442** permits the operator to enter a characteristic of the size of target object **168**. Illustratively target type input **442** is a drop-down list. An operator selects expander input **470** to open the drop down list and show the various representations target objects for selection. The operator then highlights the desired representation of the desired target object. In one embodiment, the available selections for input **442** are: T-62 Tank, Square Box Model, Army Square Box, GMC Pickup (Side), Building, and User Defined. Each of the target type input selections have a different width and height value associated therewith that approximate the overall size of the actual target object. As such, each target representation is a quadrilateral representation of the actual target object. Other types of approximation may be used.

Returning to FIG. **12** and relative to target type input **442**, a target type variable **472** is shown which corresponds to the selection made through target type input **442**. Variable **472** is a word unsigned integer number (U16) that corresponds to an array value. Variable **472** is provided to or called by laser targeting software **114** which then looks for the corresponding width value for a width variable **474** in an array **476** and for the corresponding height value for a height variable **478** in array **476**. Array **476** represents a library of target sizes **480**. Once the value of width variable **474** and the value of height variable **478** are known, an area of target object **168** is determined based on equation (3):

$$A=xy \tag{3}$$

wherein A is the target area (value of target area variable **484**), x is the target width (value of target width variable **474**) and y is the target height (value of target height variable **478**). As mentioned herein, the area of target object **168** is used in the determination of the overlap of the laser spot at the target area. The target area is represented in FIG. **12** as target area variable **484** which is a DBL.

The "User Defined" selection option for target type variable **472** signals to laser targeting software **114** to accept a value entered through width input **448** as the value of width variable **474** and to accept a value entered through height input **450** as the value of height variable **478**. This is illustrated in FIG. **12** as user defined width variable **486** which is a DBL and user defined height variable **488** which is a DBL. This allows a user to specify a width value for target object **168** and a height value for target object **168** when one of the available options for target type input **442** is not acceptable or where a particular target width value and target height value have been empirically determined.

Target angle input **444** permits the operator to enter a characteristic of the projected angle of the target surface normal to the sensor line of sight size of target object **168** (angle **171** in FIG. **2** and angle **195** in FIG. **3**). Illustratively, target angle input **444** is a drop-down list. An operator selects expander input **490** to open the drop down list and show the various angles for selection. The operator then highlights the desired angle. In one embodiment, the available selections for input **444** are: 0 degrees; 15 degrees; 30 degrees; 45 degrees; 60 degrees; 75 degrees; and 90 degrees. Based on the angle, laser targeting software **114** may determine a projected target area which is the area of the target when viewed from an angle (angle **171** in FIG. **2** and angle **195** in FIG. **3**). The projected area may be determined based on equation (4):

$$A_P = A\cos(\gamma) \tag{4}$$

wherein A_p is the projected area (value of variable **500**); A is the target area determined through equation (3) (value of variable **484**), and γ is angle **171** in FIG. **2** for laser rangefinder application **150** or angle **195** in FIG. **3** for laser designator application **180** (value of variable **494**).

Returning to FIG. **12** and relative to target angle input **444**, a target angle detector variable **492** is shown which corresponds to the selection made through target angle input **444**. Target angle detector variable **492** is a word unsigned integer number (U16) that corresponds to an array value. Target angle detector variable **492** is provided to or called by laser targeting software **114** which then looks for the corresponding angle value for an angle variable **494** in an array **496**. Array **496** represents a library of target to detector angles **498**. Once the value of angle variable **494** and the value of target area variable **484** are known, the value of a projected area variable **500** is determined based on equation (4). The projected target area is represented in FIG. **12** as target area variable **500** which is a DBL. It is the value of target area variable **500** which is used in further calculations involving the size of the target object as viewed from the detector.

Referring to FIG. **13**, in one embodiment, a user through a selection input, such as a drop down list, selects a target object from a listing of possible target objects. In this example, an operator provides a value for a single variable **510** corresponding to the selection made through the selection input. Variable **510** is a word unsigned integer number (U16) that corresponds to an array value. Variable **510** is provided to or called by laser targeting software **114** which then looks for the corresponding target variable values in an array **512**. Array **512** represents a library of target objects **514**.

Referring to FIG. **14**, an exemplary environment input module **312** is shown. In the illustrated embodiment, environment input module **312** includes three inputs: visibility input **520**, path type input **522**, and altitude input **524**. Each of inputs **520-524** may be any type of selection input whereby a user of user interface **300** may enter information, such as list boxes, drop-down lists, option buttons, toggles, check boxes, command buttons, entry fields, and other suitable selection inputs.

Visibility input **520** permits the operator to enter a characteristic of the visibility of the atmosphere or media through which the laser light is passing. Illustratively visibility input **520** is a drop-down list. An operator selects expander input **526** to open the drop down list and show the various atmospheric conditions for selection. The operator then highlights the desired atmospheric condition. As electromagnetic radiation, such as a laser beam, propagates through an atmosphere over some distance to a detector, it is observed that the intensity of the radiation reaching the sensor of the detector is reduced. The reduction in transmission of the light is caused by the scattering of radiation or the absorption of radiation by molecules or other particles in the atmosphere. The combination of scattering & absorption is called "extinction", because it is a decrease in the amount of radiation going in the initial direction. Atmosphere over and near the surface of the ocean will contain large amounts of salt and water vapor resulting in differing extinction coefficients than atmosphere over land. In one embodiment, the available selections for visibility input **520** are: (5 km) Rural Visibility; (5 km) Urban Visibility; (15 km) Rural Visibility; (23 km) Maritime Visibility; (23 km) Rural Visibility; (50 km) Tropospheric Visibility; Desert Extinction; and Vacuum.

Path type input **522** permits the operator to enter a characteristic of the path of the laser beam through which the laser light is passing. Illustratively path type input **522** is a drop-down list. An operator selects expander input **528** to open the drop down list and show the various path types for selection. The operator then highlights the desired path type. In one embodiment, the available selections for path type input **522** are: Slant Path and Horizontal Path. A slant path is typically characteristic of an application when a laser is being utilized from an air based platform.

Altitude input **524** permits the operator to enter an altitude at which the laser beam is passing. Illustratively altitude input **524** is a drop-down list. An operator selects expander input **530** to open the drop down list and show the various altitudes for selection. The operator then highlights the desired altitude. In one embodiment, there are twenty available selections for altitude input **524**, Sea Level to twenty thousand feet in one thousand feet increments. Atmospheres near the ground surface will generally contain greater amounts of aerosol than the atmosphere in the region of the stratosphere resulting in differing extinction coefficients.

Referring to FIG. **15**, a representation of the data stored on memory **104** related to environment input module **312** is shown. Relative to visibility input **520**, a visibility variable **540** is shown which corresponds to the selection made through visibility input **520**. Variable **540** is a word unsigned integer number (U16) that corresponds to an array value. Relative to path type input **522**, a path type variable **542** is shown which corresponds to the selection made through input **522**. Path type variable **542** is a word unsigned integer number (U16) that corresponds to an array value. Relative to altitude input **524**, an altitude variable **544** is shown which corresponds to the selection made through input **524**. Altitude variable **544** is a word unsigned integer number (U16) that corresponds to an array value.

Variables **540**, **542**, **544** are provided to or called by laser targeting software **114** which then looks for the corresponding value for an extinction coefficient variable **546** in an array **548**. Array **548** represents a library of environments **550**. As mentioned herein, the extinction coefficient of an environment is wavelength dependent. As such, laser targeting software **114** needs to know the values of visibility variable **540**, path type variable **542**, altitude variable **544** and wavelength variable **379** to select the correct value for extinction coefficient variable **546**. In the illustrated example, the value of variable **540** is 1, the value of variable **542** is 2, the value of variable **544** is 1, and the value of variable **379** is 1.06411. Based on these values the corresponding extinction coefficient returned from array **548** (the value of extinction coefficient variable **546**) is a double precision, floating point number (DBL) with a value of 0.069. This value is displayed in region **552** of environment input module **312** which provides the average extinction coefficient along the path of the laser radiation based upon the atmospheric input value conditions chosen through visibility input **520** and path type input **522**, but corrected for an altitude chosen through altitude input **524**. This is the value used by laser targeting software **114** in determining the value of a transmission percentage variable **554** as explained herein. Shown in region **556** of environment input module **312** is the average extinction coefficient along the path of the laser radiation based upon the atmospheric input value conditions chosen through visibility input **520** and path type input **522** and with the assumption that the altitude is Sea Level. The changes in transmission percentage variable **554** as a function of altitude is illustrated in FIG. **23**.

The values of extinction coefficient variable **546** are populated in the array **548** based on information from a PcLnWin model version of FASCODE available from Ontar located at 9 Village Way in North Andover, Mass. 01845-2000. The PcLnWin model calculates atmospheric transmission properties based on HITRAN database of spectroscopic parameters for atmospheric gases.

Based on the returned value of extinction coefficient variable **546**, a value of transmission percentage variable **554** may be determined based on equation (5):

$$T=e^{-\sigma R} \tag{5}$$

wherein T is the value of transmission variable **554**, σ is the value of extinction coefficient variable **546**, and R is the distance that the light travels through the material (the path length). In the case of laser rangefinder application **150**, the value of transmission variable **554** may be used for both the traveling of light from laser source **154** to target object **168** and for the traveling of light from target object **168** to detector **158**. In the case of laser designator application **180**, different values of transmission variable **554** may be needed for the traveling of light from laser source **184** to target object **168** and for the traveling of light from target object **168** to detector **200**. In one embodiment, the path length is the sum of the value of the laser to target variable **610** (see FIG. **20**) and value of the detector to target variable **621** (see FIG. **20**).

Based on the value of extinction coefficient variable **546** returned from array **548** the value of a transmission percentage variable **554** is determined which corresponds to the percentage of radiant flux transmitted along the entire path length from the respective laser source to the respective detector sensor. The value of variable **554** is shown in region **562** of environment input module **312**. In one embodiment, the value of variable **554** is determined based on equation (5) wherein R is the distance from the laser source to the detector sensor.

Based on the altitude corresponding to the selection with altitude input **524**, a value for a distance to horizon variable **570** is determined. In one embodiment the value for the horizon variable **570** is determined based on equation (6)

$$d=\sqrt{(2Rh+h^2)} \tag{6}$$

wherein d is the value of horizon variable **570**; R is the radius of the Earth; and h is the altitude corresponding to the selection with altitude input **524**. The value of horizon variable **570** is shown in region **572** of environment input module **312**.

Referring to FIG. **16**, an exemplary pointing error input module **314** is shown. In the illustrated embodiment, pointing error input module **314** includes two inputs, laser to reticule error input **590** and system jitter error input **592**. Each of inputs **590** and **592** may be any type of selection input whereby a user of user interface **300** may enter information, such as list boxes, drop-down lists, option buttons, toggles, check boxes, command buttons, entry fields, and other suitable selection inputs.

Laser to reticule error input **590** corresponds to a misalignment in an aiming mechanism employed to direct the laser beam onto target object **168**. In the case of a multi-sensor imaging system, the display of the imaging device typically contains an overlay crosshair reticule onto which the laser beam centroid is aligned or boresighted to the display. Any misalignment causes the laser beam to not be centered on the reticule. Typically the device or system is evaluated to measure the boresight error of the system. This error is usually found to be less than 100 micro radians.

System jitter error input **592** corresponds to the system jitter of the laser designator or rangefinder. The laser and the sensor are to be line of sight stabilized in order to accurately direct the laser onto the target over time especially at large distances. In one embodiment, the laser is being "aimed" by using the video image generated from the sensor while sometimes under intense vibration from the moveable support. In the case of a laser designator application **180**, a video autotracker is used for automatic steering of the laser designator onboard a platform so as to keep the aim point centered on the target. Once the autotracker is activated, it makes use of the video signal to acquire all or part of the image in order to keep it in the field of view. Typically a track box surrounds the target while keeping it centered and aligned to the crosshair reticule where the laser can then be utilized to mark the target. Some of the challenges that an autotracker encounters is a cluttered background, disturbances in the sensor field of view such as smoke and dust, a changing target image due to changes in direction and distance, changes in light conditions, changes in contrast, and changes due to multi-sensor motion. High quality trackers are capable of maintaining track with errors of less than 40 μrad.

The stabilization and tracker errors can be modeled as random Gaussian events that radially offset the beam from the boresight position on the target. Numbers of these events may be simulated and the percent of the energy that falls on the target for each case over some percentage of time or samples is calculated as discussed herein.

Laser to reticule error input **590** permits an operator to enter a value in the respective entry fields **594** or to adjust a displayed value up or down by a preset increment with the respective adjustment input **596**. System jitter error input **592** permits an operator to enter a value in the respective entry fields **598** or to adjust a displayed value up or down by a preset increment with the respective adjustment input **600**.

Referring to FIG. **17**, a representation of the data stored on memory **104** related to pointing error input module **314** is shown. Two variables **602** and **604** are shown. Laser to reticule variable **602** corresponds to the input made through input **590** and is DBL. Variable **604** corresponds to the input made

through input **592** and is DBL. Variables **602** and **604** are provided to or called by laser targeting software **114**.

Based on the value of laser to reticule variable **602**, laser targeting software **114** determines a value for a laser centroid at target error variable **606**. In one embodiment, the value of target error variable **606** is determined based on equation (7):

$$d = r\,\mathrm{Tan}(\theta) \tag{7}$$

wherein d is the value of target error variable **606**, r is the value of the laser to target variable **610**; and θ is the value of laser to reticule variable **602**. The value of target error variable **606** is displayed in region **608** of pointing error input module **314**.

Referring to FIG. **18**, an exemplary source to target range input module **316** is shown. In the illustrated embodiment, source to target range input module **316** includes a laser to target range input **610**. Input **610** may be any type of selection input whereby a user of user interface **300** may enter information, such as list boxes, drop-down lists, option buttons, toggles, check boxes, command buttons, entry fields, and other suitable selection inputs. Input **610** includes three ways to specify a value for a laser to target range variable **610** (see FIG. **20**), a slider input **612** whereby a user "grabs" the slider bar **613** and moves it up or down, an input box **614** whereby a user types in a value, and adjustment input **616** whereby a user adjusts the displayed value by a preset increment.

Referring to FIG. **19**, an exemplary detector to target range input module **318** is shown. In the illustrated embodiment, detector to target range input module **318** includes a laser to target range input **620**. Input **620** may be any type of selection input whereby a user of user interface **300** may enter information, such as list boxes, drop-down lists, option buttons, toggles, check boxes, command buttons, entry fields, and other suitable selection inputs. Input **620** includes three ways to specify a value for a target to detector range variable **621** (see FIG. **20**), a slider input **622** whereby a user "grabs" the slider bar **623** and moves it up or down, an input box **624** whereby a user types a value, and adjustment input **626** whereby a user adjusts the displayed value by a preset increment.

In the case of laser rangefinder application **150**, the values for target range variable **610** and detector range variable **621** are equal. In the case of laser designator application **180**, the values of target range variable **610** and detector range variable **621** may be different.

Referring to FIG. **20**, a representation of the data stored on memory **104** related to source to target range input module **316** and detector to target range input module **318** is shown. Two variables **610** and **621** are shown. Variable **610** corresponds to the input made through input **610** and is DBL. Variable **621** corresponds to the input made through input **620** and is DBL. Variables **610** and **621** are provided to or called by laser targeting software **114**.

Referring to FIG. **21**, an exemplary minimum flux input module **320** is shown. In the illustrated embodiment, minimum flux input module **320** includes a minimum flux on dome input **630**. Input **630** may be any type of selection input whereby a user of user interface **300** may enter information, such as list boxes, drop-down lists, option buttons, toggles, check boxes, command buttons, entry fields, and other suitable selection inputs. Input **630** includes two ways to specify a value for a Minimum Flux on Dome variable **656** (see FIG. **22**), a input box **634** whereby a user types a value, and an adjustment input **636** whereby a user adjusts a displayed value by a preset increment.

The minimum flux required at the surface of the dome or detector is a parameter specified by the detector manufacturer. When this value is available, the value may be specified through input **630** (see FIG. **21**). Minimum flux input module **320** includes a first indicator **638** which is a region that is illuminated green to indicate the presence of the minimum flux and a second indicator **640** which is a region that is illuminated red to indicate the absence of the minimum flux. In some instances values for the detector inputs are not known (e.g. the transmission of the optics, NEP of the detector) as these are engineering design values not made available. However, a value is typically given for the amount of flux needed on the dome or aperture of the detector in W/cm2 or J/cm2 (input with **630**). In such a scenario the amount of flux is input with **630** and the diameter of the dome or aperture (variable **420**) in the detector parameters. The value displayed in **650** is compared to the value input with **630** and indicators **638**, **640** provide a visual feedback if the minimum flux is present.

In one embodiment, laser targeting software **114** determines the flux received by the detector and displays this value in region **650** of minimum flux input module **320**. The flux incident upon the detector area may be determined based on equation (8)

$$\phi = \frac{L_S A_S A_C}{R^2} \tag{8}$$

wherein ϕ is the flux incident upon the detector (value of received energy variable **658**); L_S is the radiance of target object **168** (see below); A_S is the area of the source (the area of the fractional amount of the laser spot from equation 11); A_C is the detection area (value of receiving area variable **428**); and R is the distance between target object **168** and the detector (value of detector range variable **621**). The radiance of target object **168** (L_S) may be determined based on equation (9)

$$L_S = \frac{E_{ref}}{\pi} \tag{9}$$

wherein E_{ref} is the irradiance of target object **168** (value of target energy variable **662**) and π is a constant. The irradiance of target object **168** (E_{ref}) may be determined by equation (10)

$$E_{ref} = EL \tag{10}$$

wherein E is the irradiance incident on target object **168** and L is the Lambertian reflectivity of in the direction of the detector (value of reflectivity variable **462**). The irradiance incident on target object **168** (E) may be determined by equation (11)

$$E = \frac{TPA}{a} \tag{11}$$

wherein T is the atmospheric path transmission (value of variable **560**); P is the power of the laser pulse (the product of the value of variable **376** and the value of variable **378**); a is the area of the laser spot at the target plane (value of spot area variable **682**); and A is the fractional amount of the laser spot area (a) irradiating the target object **168**. The laser spot area (a) may be determined by equation 12

$$a = \frac{(a_{source}^2 + \Phi r^2)\pi}{4} \quad (12)$$

wherein a_{source} is the diameter of the laser beam at the source (the value of variable **374**); Φ is the beam divergence angle in radians (the value of variables **372**); and r is the range from the source to the target plane (the value of target range variable **610**). The fractional amount is determined based on knowing the center of the laser beam (TEMOO mode) relative to the target object. The area of the circle (laser beam) that intersects with the rectangle (target object) may be determined by standard geometrical relationships.

Through input **652**, an operator of user interface **300** may select the units to specify the value for the minimum flux required on the dome. Input **652** toggles between two options: Watts/cm^2 and Joules/cm^2. Also, through input **654**, an operator of user interface **300** may launch a help file which provides information of the operation of user interface **300** and laser targeting software **114**.

Referring to FIG. **24**, an exemplary target irradiance output module **330** is shown. In the illustrated embodiment, target irradiance output module **330** provides information on the irradiance of target object **168**. Target irradiance output module **330** displays in region **700** the radiant power impinging upon the target surface in Watts/cm^2. This corresponds to the value of variable **660** which is determined by laser targeting software **114** by dividing the value of target energy variable **662** by the value of pulse width variable **376**. Target irradiance output module **330** displays in region **702** the radiant energy impinging upon the target surface in Joules/cm^2 which is determined by laser targeting software **114** as explained in connection with equation 11 above. The values reported for variables **660** and **662** may not be the total amount of energy within the entire laser spot at the target plane because they represent only the portions of the laser spot incident on the target **168**.

Referring to FIG. **25**, user interface **300** in a software control input module **322** provides information on the status of laser targeting software **114**. When laser targeting software **114** is actively processing data the textual label "Running" is displayed in region **704** of software control input module **322**. Laser targeting software **114**, once started, continues to run until input **706** is selected. As laser targeting software **114** continues to run the number of samples considered in energy on target output module **334**, as explained herein, increases.

Referring to FIG. **26**, an exemplary detection probability output module **326** is shown. In the illustrated embodiment, detection probability output module **326** provides information on noise in the system and the probability of detection. Laser targeting software **114** determines a value of a signal to noise (S/N) variable **670** (see FIG. **22**) and displays that value in region **708** of detection probability output module **326**. In one embodiment, the value of S/N variable **670** is determined based on equation (13)

$$S/N = \left(\frac{A_t}{R^2 NEI}\right) f n_t e^{\frac{-2kR}{R^2}} \quad (13)$$

wherein A_t is the projected area of the target; R is the Slant Range to Target; NEI is the Noise Equivalent Irradiance; f is the retro reflectance of target; n_t is the efficiency factor for pulse stretching by the target; and k is the atmospheric extinction coefficient. Equation 13 involves the source, intervening medium, optical subsystem, detector, signal-conditioning optics, and display. The complete equation may be simplified based on assumptions or neglecting minimal contributions to the overall S/N resulting in equation 14

$$S/N = \frac{\phi_{eff}}{NEP} \quad (14)$$

wherein ϕ_{eff} is the part of the flux incident upon the sensor entrance aperture that is effective in evoking a response in the sensor and NEP is the level of flux incident upon the sensor entrance aperture that produces an average change in the output signal equal to the root-mean-square (rms) noise. In other words, it is a ratio of the peak signal to rms noise. It is this value that is displayed in region **708**. If ϕ_{eff} and NEP are equal this gives a SNR of 1.

Laser targeting software **114** further determines a value of a threshold to noise (T/N) variable **672** and displays that value in region **710** of detection probability output module **326**. Laser rangefinders generally detect the signal pulse by comparing the amplitude of the amplified and filtered signal with a threshold setting. The Threshold to Noise ratio (T/N) is the ratio of this electrical threshold to the total rms noise at the comparator. The value of T/N is set by the requirement to limit noise-induced false alarms. In one embodiment, the value of variable **672** may determined based on equation (15)

$$T/N \cong \sqrt{-2\ln(2\sqrt{3}\,(PW)(FAR))} \quad (15)$$

$$FAR = \frac{c}{2R_{max}} \quad (15a)$$

wherein R_{max} is the maximum range of a range counter (value of range gate variable **426** in FIG. **9**; default is 0.3 km); c is the speed of light; FAR is the average false alarm rate (in one example assumed to be 1/1000); and PW is the pulse width (value of variable input **376**). In other words it is the ration of the detection threshold to rms noise.

Once the values for variable **670** and variable **672** are known, laser targeting software **114** is able to determine a value for a Detection Probability variable **674**. The probability of ranging to a target object is generally the probability that the peak electrical signal plus noise will exceed a detection threshold and drive the output of the curve in FIG. **27** as well as all other output values. In one embodiment, laser targeting software **114** determines the value of detection probability variable **674** by equation (16)

$$Pd = \frac{1}{2} + \frac{1}{2}\mathrm{erf}\left(\frac{S/N - T/N}{\sqrt{2}}\right) \quad (16)$$

wherein S/N is the value of variable **670**; T/N is the value of variable **672**; and erf(x) is a single sided error function. If the value of detection probability variable **674** is 100 percent then laser targeting software **114** illuminates green region **712** of detection probability output module **326** indicating a likelihood of detecting target object **168** with the detector. If the value of detection probability variable **674** is less than 100 percent then laser targeting software **114** illuminates red region **714** of detection probability output module **326** indicating an absence of a likelihood of detecting target object **168** with the detector. In either case, the value of detection

probability variable **674** is displayed in region **716** of detection probability output module **326**.

The value of detection probability variable **674** is dependent on the value of detector range variable **621**. Referring to FIG. **27**, laser targeting software **114** determines the value of detection probability variable **674** at a variety of values of detector range variable **621**. These values of detection probability variable **674** are stored in an array along with the corresponding values of the detector range variable. A visual representation **718** of the value of detection probability variable **674** for the various values of detector range variable **621** are shown in region **720** of the detection expectation over a range output module **328**. Further, the user inputted value for detector range variable **621** is displayed in region **722** of detection expectation over a range output module **328**. In one embodiment, he detection expectation over a range output module **328** graphs the Pulse Detection in Gaussian Noise function (equation 16) where the x axis is range from the Lambertian reflective target surface to the sensor input aperture and the y axis is the estimated probability of detection. Visual representation **718** provides an operator with a indication of how close the inputted range displayed in region **722** is from the range at which the value of variable **674** drops below 100 percent. The graph displayed in detection expectation over a range output module **328** is one example of a visual representation of the detection probability as a function of range to the target.

Referring to FIG. **28**, an exemplary laser spot alignment output module **332** is shown. Laser spot alignment output module **332** includes a representation of a polar graph **750**. A shaded area **752** is indicated on polar graph **750**. Shaded area **752** corresponds to target object **168** as seen through a reticule of either detector **158** of laser rangefinder device **152** or detector **200** of tracking device **198**. In the illustrated embodiment, shaded area **752** is centered on polar graph **750**. Also, as illustrated shaded area **752** is a quadrilateral in shape. This shape corresponds to the values of width variable **474** and height variable **478** which were specified through target object input module **310** adjusted for the angle specified through target object input module **310**. As such, adjusting the size of the target specified through target object input module **310** and/or adjusting the angle specified through target object input module **310** results in the size of shaded area **752** changing. Of course, the shape specified through target object input module **310** and the corresponding shape represented by shaded area **752** may be any desirable shape, including polygonal, circular, elliptical, and other suitable shapes.

A laser spot region **754** is further illustrated on polar graph **750**. Laser spot region **754** corresponds to the size of the laser spot at the target. In the illustrated embodiment, laser spot region **754** is a circular region having a diameter corresponding to the value of a laser spot at target variable **680** (the value of the laser spot diameter at target variable **680** is provided in region **757** of laser spot alignment output module **332**). The determined area of the laser spot is provided in region **755** of laser spot alignment output module **332** (value of a spot area variable **682**). A Gaussian TEM00 transverse mode has been assumed in conjunction with all of the laser beam profile and directional characteristics given from the laser input parameters.

The location of laser spot region **754** is determined based on the provided laser input and directional characteristics. The laser spot centroid is determined based on the boresight error and/or the stabilization error which is independent of laser spot diameter. This angular error generates an error in the laser centroid at the target surface some distance from the output of the laser. A zero degree angular error places the laser centroid at the center of the crosshairs of FIG. **28** which are at the center of the target area in both x and y directions. The boresight error is assumed to be static while the stabilization error may cause the position of the laser centroid in FIG. **28** to move during execution of the software.

In FIG. **28**, laser spot region **754** is shown completely aligned with shaded area **752**. As such, 100 percent of the energy of the laser spot is incident on the target. A second laser spot region **756** is shown for comparison purposes. Second laser spot region **756** is not completely aligned with shaded area **752**, but does still completely overlap shaded area **752**. A third laser spot region **758** is also shown for comparison purposes. Third laser spot region **758**, like second laser spot region **756** is not completely aligned with shaded area **752**. Further, third laser spot region **758** only partially overlaps shaded area **752**. This means some of the laser energy at the target plane is not impinging upon target object **168**. When this is the case, laser targeting software **114** provides a "Spillover" indicator **760** on laser spot alignment output module **332** to alert the operator that a portion of the laser energy is not impinging on the target object **168**.

Laser spot alignment output module **332** further provides additional characteristics regarding the laser spot at the target. In region **762**, laser spot alignment output module **332** provides the value of a percentage of energy on target variable **678**. The value of percentage of energy on target variable **678** is an estimate of the percentage of the amount of energy that is to be incident upon the target surface of the overall energy of the laser spot at the target based on the assumption that the laser beam has a Gaussian TEM00 transverse mode.

In region **764**, laser spot alignment output module **332** provides the value of a target projected flux area variable **676**. The value of target projected flux area variable **676** is an indication of the Areance[exitance] (flux/cm2) of the laser energy that is "projected" toward the receiving sensor aperture from the fractional amount of the flux impinging upon the target.

Referring to FIG. **29**, an exemplary energy on the target output module **334** is shown. Energy on target output module **334** provides a method of simulating how a particular pointing error may result in affecting the energy on a target surface. The combination of the Laser Beam Divergence Error (Beam Divergence is a characteristic of the laser which determines the beam diameter at some distance away from the laser output and is a variable in determining the amount of spillover due to spot size alone), Laser Beam to Sensor Reticule or Boresight Error (value of laser to reticule variables **602**; see FIG. **17**), Gimbal Stabilization Error (taken into account as part of the system jitter value), and Video Autotracker Error (taken into account as part of the system jitter value) combine to produce the total pointing error, which if large enough may cause the laser spot to be unintentionally misdirected away from the intended target object. The desired total pointing error is normally cited in a specification phrase something like "The laser designator shall be able to maintain 90% of the energy on a 3.4 meter×2.4 meter target 95% of the time at some range".

Energy on target output module **334** includes two inputs. First, input region **780** permits an operator to specify a value for a percent of energy on target variable **684** (see FIG. **22**). The value of percentage of energy for detection variable **684** specifies the portion of the energy which is desired to remain on the target **168** over some number of samples or over some corresponding time frame. Second, a Loop Delay slide bar input **782** allows an operator to manipulate the sample rate for the model by selecting marker **784** and positioning the marker **784** relative to a bar **786**.

For each sample, an error is determined. In one embodiment, each of the errors are modeled as random Gaussian events. The errors specified in pointing error input module **314** provided the limits on the error. Then based on errors the value for target variable **678** is determined for that sample as the ratio of the energy within the entire laser spot to the energy that is on the target surface. This value is compared to the value displayed in **650** in FIG. **21** to determine if the minimum amount of energy is illuminating the target **168** and more importantly that the amount of energy illuminating the target is reflected back through the atmosphere to satisfy FIG. **21** output **650**. This is repeated for each subsequent sample.

Energy on target output module **334** includes several output indicators. Chart **790** expresses the value of percent energy on target variable **678** as a percentage of the samples that achieve the criteria to the total number of samples. The samples are the ordinate values and the percentage of energy are the abscissa values. As illustrated in FIG. **29**, the range of samples shown have a percentage of energy in the range of from about 35 percent to a cap of 100 percent. The number of samples simulated (value of samples variable **693**) is displayed in region **792** of the energy on target output module **334**. The number of samples may be thought of as laser pulses whose resultant positioning at the target are modeled as random Gaussian events. If the value of the system jitter variable **604** is zero, then graph **790** is a straight line because there is no system jitter error component. The simulation may started and stopped through selection of input **794** or reset to zero samples through selection of input **796**.

In addition to chart **790**, energy on target output module **334** provides a percent of time (value of percent of time on target variable **686**) that the desired percent of energy is present in region **798**. The value of target variable **686** represents the fractional number of samples that provide the required amount of energy at the target surface. Further, energy on target output module **334** provides a percentage (value of percent detected variable **690**) of the number of samples that the detector **158** of laser rangefinder device **152** or detector **200** of tracking device **198** is able to detect target object **168**. The value of detected variable **690** represents the fractional number of samples that provide the required radiometric energy at the sensor aperture to satisfy the Pulse Detection in Gaussian Noise function (equation 16). The value of variable **690** is displayed in region **799**.

Referring to FIG. **30**, an exemplary auxiliary output module **324** is shown. Auxiliary output module **324** allows an operator to select an export input **800** which causes laser targeting software **114** to output the values of various variables and the data for chart **718** in detection expectation over a range output module **328** and the chart **790** in energy on target output module **334**. In one embodiment, the information is exported in a format acceptable by a spreadsheet program, such as a comma delimited format. An exemplary spreadsheet program is the EXCEL spreadsheet available from Microsoft Corporation located in Redmond, Wash. In one embodiment, the EXCEL spreadsheet is launched and the information is directly loaded into an EXCEL workbook.

Further, auxiliary output module **324** includes a Radiometric Values input **802**. Selecting input **802** results in the information window **804** in FIG. **31** being displayed on display **130**. Information window **804** may be closed by selecting input **806**. A first region **808** of information window **804** provides the energy and power levels of the laser at the target area. A second region **810** of information window **804** provides information regarding the fractional amount of energy which impinges upon target object **168** and also on the amount of energy that target object **168** reflects. After the laser energy leaving the laser source irradiates the target surface, the target becomes a new diffuse source radiator for the detector sensor. A third region **812** of information window **804** provides information regarding the amount of energy that is received by the detector of the system.

Referring to FIG. **32**, in one embodiment, memory **104** includes a library of targets **850** including information regarding a plurality of targets **852-858**; a library of sources **860** including information regarding a plurality of sources **862-868**; a library of detectors **870** including information regarding a plurality of detectors **872-878**; and a library of environments **880** including information regarding a plurality of environments **882-888**. The various library members provide the information regarding the respective sources, targets, environments, and detectors discussed herein for making a determination regarding a likelihood of detecting a given target object positioned in a given environment, illuminated by and given source, and potentially detected by a given detector. The use of one or more of libraries **850**, **860**, **870**, and **880** are useful when planning a mission. Often times, a user of a laser rangefinder in a laser rangefinder application **150** or a user of a laser designator in a laser designator application **180** has some stock source systems and detector systems available for use in a mission wherein a given target is positioned in a given environment. Through libraries **850**, **860**, **870**, and **880**, the user is able to model a given source and a given detector to determine if they likely will be successful in detecting the given target is positioned in the given environment.

Referring to FIG. **33**, in an exemplary mission planning method a user selects a target, such as target **854**, from the library of targets **850**, as represented by block **890**. A user also selects an environment, such as environment **888**, from the library of environments **880**, as represented by block **892**. A user further selects a source, such as source **868**, from the library of sources **860**, as represented by block **894**. A user also selects a detector, such as detector **872**, from the library of detectors **870**, as represented by block **896**. The user also specifies range and system information as discussed herein, as represented by block **898**. Laser targeting software **114** then determines a likelihood of success of the system, as represented by block **900**. In one embodiment, if the value of detection probability variable **674** is 100 percent then the system is determined to be successful, as represented by block **902**. If the system is successful, then laser targeting software **114** is finished, as presented by block **904**. If the system is not successful, then the user is prompted to select a different source device or a different detector device, as represented by block **906**. In one embodiment, the use may input variable values for a specific source, detector, or target instead of picking from a library. This may be needed in situations wherein the system does not include a library of detectors.

In one embodiment, if the value of detection probability variable **674** is 100 percent and there is no spillover then the system is determined to be successful. In one embodiment, if the value of detection probability variable **674** is 100 percent and the percentage of energy on the target exceeds the value of target variable **684** then the system is determined to be successful. In one embodiment, if the value of detection probability variable **674** is 100 percent, there is no spillover, and the percentage of energy on the target exceeds the value of target variable **684** then the system is determined to be successful.

While this invention has been described as having an exemplary design, the present invention may be further modified within the spirit and scope of this disclosure. This application is therefore intended to cover any variations, uses, or adapta-

tions of the invention using its general principles. Further, this application is intended to cover such departures from the present disclosure as come within known or customary practice in the art to which this invention pertains.

The invention claimed is:

1. A system for evaluating a target locator system, the system comprising:

a display;

at least one user input device;

a controller operatively coupled to the display and the at least one input device;

a memory accessible by the controller; and

laser targeting software stored on the memory for execution by the controller, the laser targeting software including

a graphical user interface presented on the display, the graphical user interface including:

a first portion presenting at least one input having a plurality of selectable values for at least one source characteristic of a laser source;

a second portion presenting at least one input for at least one detector characteristic of a detection system;

a third portion presenting at least one input having a plurality of selectable values for at least one target characteristic of a target object;

a fourth portion presenting at least one input having a plurality of selectable values for at least one environment characteristic of an environment surrounding the target object; and

a fifth portion presenting at least one input for a range of at least one of from the laser source to the target object and from the target object to the detection system; and

processing sequences to determine an amount of energy emitted by the laser source that is received by detection system subsequent to an interaction with the target object, wherein at least one of the at least one source characteristic, the at least one detector characteristic, the at least one target characteristic, the at least one environment characteristic, and the range is adjustable through the graphical user interface.

2. The system of claim **1**, wherein the first portion, the second portion, the third portion, the fourth portion, and the fifth portion of the graphical user interface are presented on the display at the same time.

3. The system of claim **1**, wherein the laser targeting software further includes processing sequences to determine a likelihood of detecting the target object with the detection system when the target object is illuminated by the laser source based on the amount of energy emitted by the laser source that is received by detection system subsequent to an interaction with the target object and at least one detection requirement.

4. The system of claim **1**, wherein the graphical user interface further includes a visual representation of a location of a laser spot of the laser source relative to a visual representation of the target object and an indicator which provides a first indication when at least a portion of the visual representation of the laser spot is positioned outside of a boundary of the visual representation of the target object.

5. The system of claim **4**, wherein the visual representation of the target object and the visual representation of the laser spot are provided along with a visual representation of a reticule of the detection system, the visual representation of the target object and the visual representation of the laser spot both being located relative to the visual representation of the reticule.

6. The system of claim **1**, wherein the laser source is a pulsed laser source providing a plurality of spaced apart pulses and the step of determining a likelihood of detecting the target object with the detection system when the target object is illuminated by the first laser source includes a processing sequence to determine over a range of pulses a percentage of pulses whose energy received by the detection system at least meets a threshold amount of energy, each of the plurality of pulses having a pointing error assigned thereto.

7. A method for evaluating a target locator system, the method comprising the steps of:

presenting through a first portion of a graphical user interface presented on a display at least one input having a plurality of selectable values for at least one source characteristic of a laser source;

receiving through the first portion of the graphical user interface a selection of a first one of the plurality of selectable values for the at least one source characteristic of a laser source;

presenting through a second portion of the graphical user interface presented on the display at least one input for at least one detector characteristic of a detection system;

receiving through the second portion of the graphical user interface a first input for the at least one detector characteristic of the detection system;

presenting through a third portion of the graphical user interface presented on the display at least one input having a plurality of selectable values for at least one target characteristic of a target object;

receiving through the third portion of the graphical user interface a selection of a first one of the plurality of selectable values for the at least one target characteristic of a target object;

presenting through a fourth portion of the graphical user interface presented on the display at least one input having a plurality of selectable values for at least one environment characteristic of an environment surrounding the target object;

receiving through the fourth portion of the graphical user interface a selection of a first one of the plurality of selectable values for the at least one environment characteristic of the environment;

presenting through a fifth portion at least one input for a range of at least one of from the laser source to the target object and from the target object to the detection system;

receiving through the fifth portion a first input for the range of the at least one of from the laser source to the target object and from the target object to the detection system; and

determining an amount of energy emitted by the laser source that is received by the detection system subsequent to an interaction with the target object.

8. The method of claim **7**, wherein the first portion, the second portion, the third portion, the fourth portion, and the fifth portion of the graphical user interface are presented on the display at the same time.

9. The method of claim **7**, further comprising the step of determining a likelihood of detecting the target object with the detection system when the target object is illuminated by the laser source based on the amount of energy emitted by the laser source that is received by detection system subsequent to an interaction with the target object and at least one detection requirement.

10. The method of claim 7, further comprising the step of presenting with the graphical user interface a visual representation of a location of a laser spot of the laser source relative to a visual representation of the target object and an indicator which provides a first indication when at least a portion of the visual representation of the laser spot is positioned outside of a boundary of the visual representation of the target object.

11. The method of claim 10, wherein the visual representation of the target object and the visual representation of the laser spot are provided along with a visual representation of a reticule of the detection system, the visual representation of the target object and the visual representation of the laser spot both being located relative to the visual representation of the reticule.

12. The method of claim 7, further comprising the step of presenting with the graphical user interface a visual representation of a location of a laser spot of the laser source relative to a visual representation of the target object and an indicator which provides a first indication when at least a portion of the visual representation of the laser spot is positioned outside of a boundary of the visual representation of the target object.

13. The method of claim 12, wherein the visual representation of the target object and the visual representation of the laser spot are provided along with a visual representation of a reticule of the detection system, the visual representation of the target object and the visual representation of the laser spot both being located relative to the visual representation of the reticule.

* * * * *