US008365664B2

(12) **United States Patent**
**Neff**

(10) **Patent No.: US 8,365,664 B2**
(45) **Date of Patent: Feb. 5, 2013**

(54) **IMPULSE CARTRIDGE**

(75) Inventor: **Daniel R. Neff**, Jasper, IN (US)

(73) Assignee: **The United States of America as represented by the Secretary of the Navy**, Washington, DC (US)

( * ) Notice: Subject to any disclaimer, the term of this patent is extended or adjusted under 35 U.S.C. 154(b) by 0 days.

(21) Appl. No.: **12/892,524**

(22) Filed: **Sep. 28, 2010**

(65) **Prior Publication Data**

US 2011/0146482 A1 Jun. 23, 2011

**Related U.S. Application Data**

(63) Continuation of application No. 12/726,850, filed on Mar. 18, 2010, now Pat. No. 8,267,014.

(60) Provisional application No. 61/289,242, filed on Dec. 22, 2009.

(51) **Int. Cl.**
*F42C 11/00* (2006.01)

(52) **U.S. Cl.** ..... **102/202.14**; 102/202.7; 102/202.9; 102/218

(58) **Field of Classification Search** ..... 102/202.7, 102/202.8, 202.9, 202.14, 218, 220
See application file for complete search history.

(56) **References Cited**

U.S. PATENT DOCUMENTS

| | | | | |
|---|---|---|---|---|
| 3,512,480 | A | 5/1970 | Barr | |
| 3,841,219 | A | 10/1974 | Schillreff | |
| 4,135,455 | A | 1/1979 | Wallace | |
| 4,422,381 | A * | 12/1983 | Barrett | 102/202.2 |
| 5,138,948 | A * | 8/1992 | La Mura et al. | 102/335 |
| 5,587,550 | A | 12/1996 | Willis et al. | |
| 5,631,439 | A * | 5/1997 | Sallee et al. | 102/217 |
| 5,773,749 | A * | 6/1998 | Cotton et al. | 102/217 |
| 6,206,414 | B1 | 3/2001 | Cook et al. | |
| 6,796,245 | B2 | 9/2004 | Parker et al. | |
| 6,860,510 | B2 | 3/2005 | Ogawa et al. | |
| 6,915,744 | B2 | 7/2005 | Tirmizi | |
| 6,945,561 | B2 | 9/2005 | Nakashima et al. | |
| 7,188,688 | B1 | 3/2007 | LeJeune | |
| 2003/0047104 | A1 | 3/2003 | Raz | |
| 2007/0295236 | A1 | 12/2007 | Callaway et al. | |

* cited by examiner

*Primary Examiner* — Stephen M Johnson
(74) *Attorney, Agent, or Firm* — Christopher A. Monsey

(57) **ABSTRACT**

An impulse cartridge having multiple charges that are independently activatable. The impulse cartridge is further voltage polarity independent through the use of diodes. The polarity independence provides increased reliability.

**14 Claims, 11 Drawing Sheets**

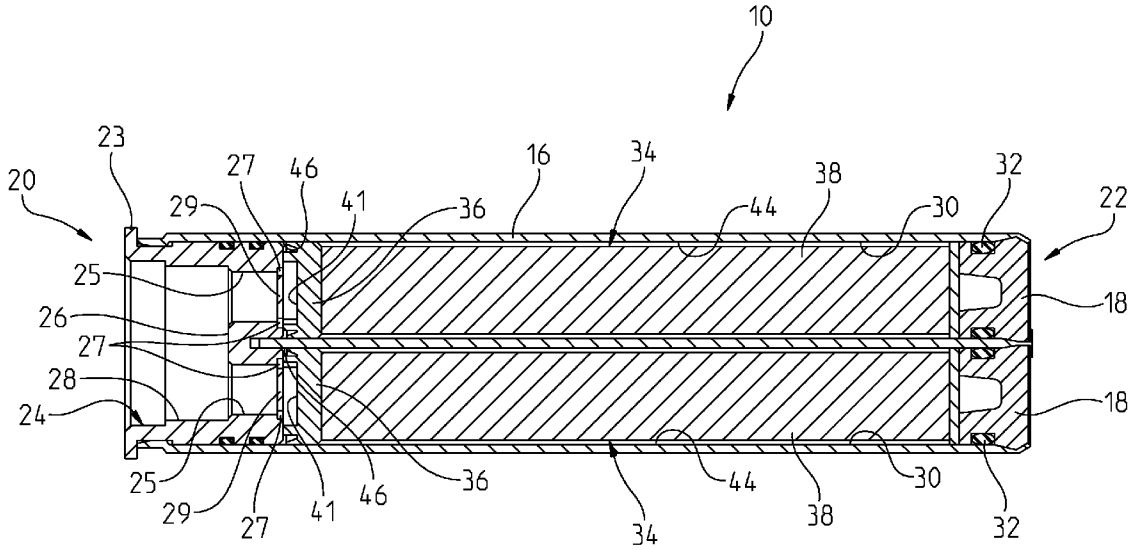

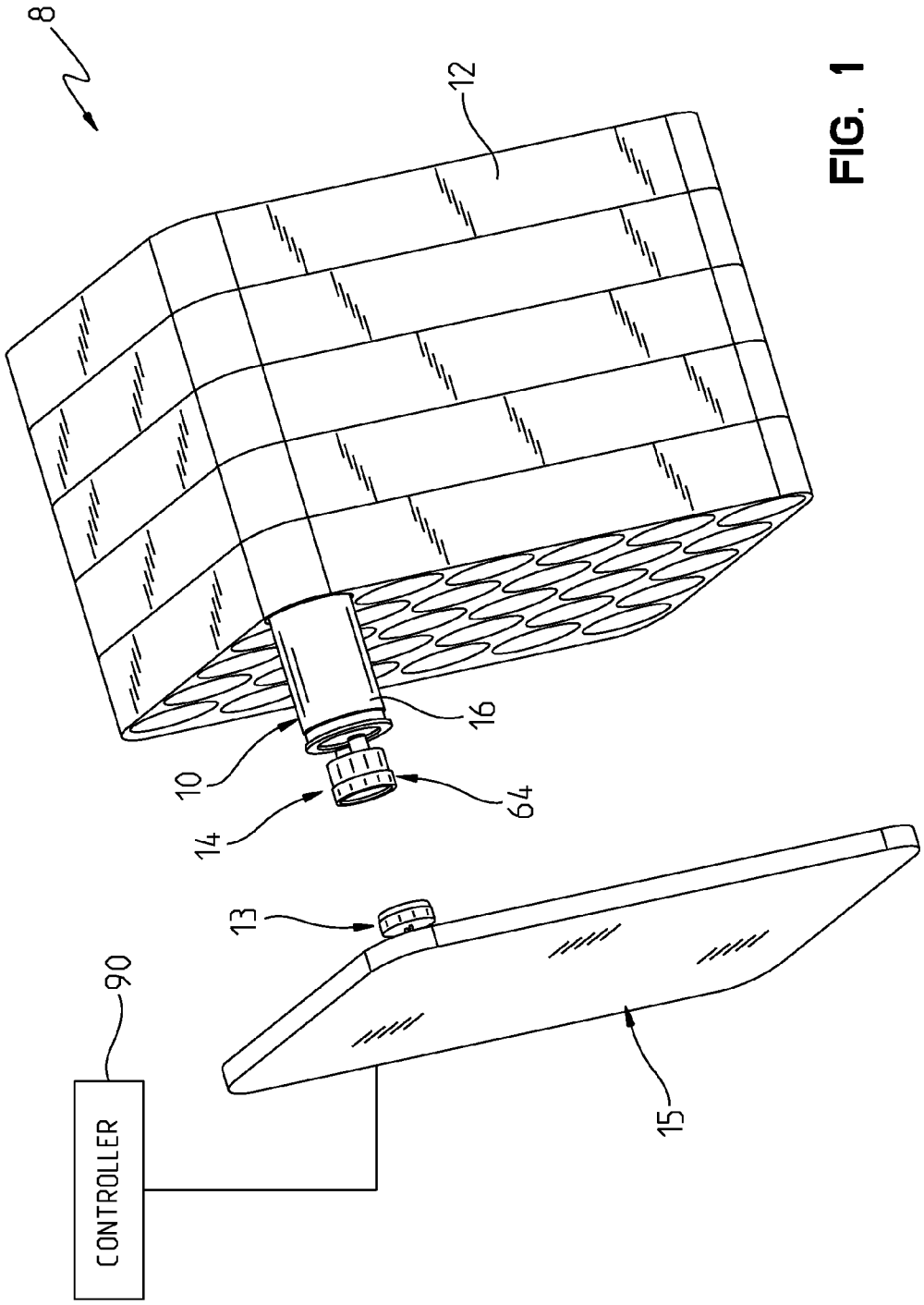


FIG. 1

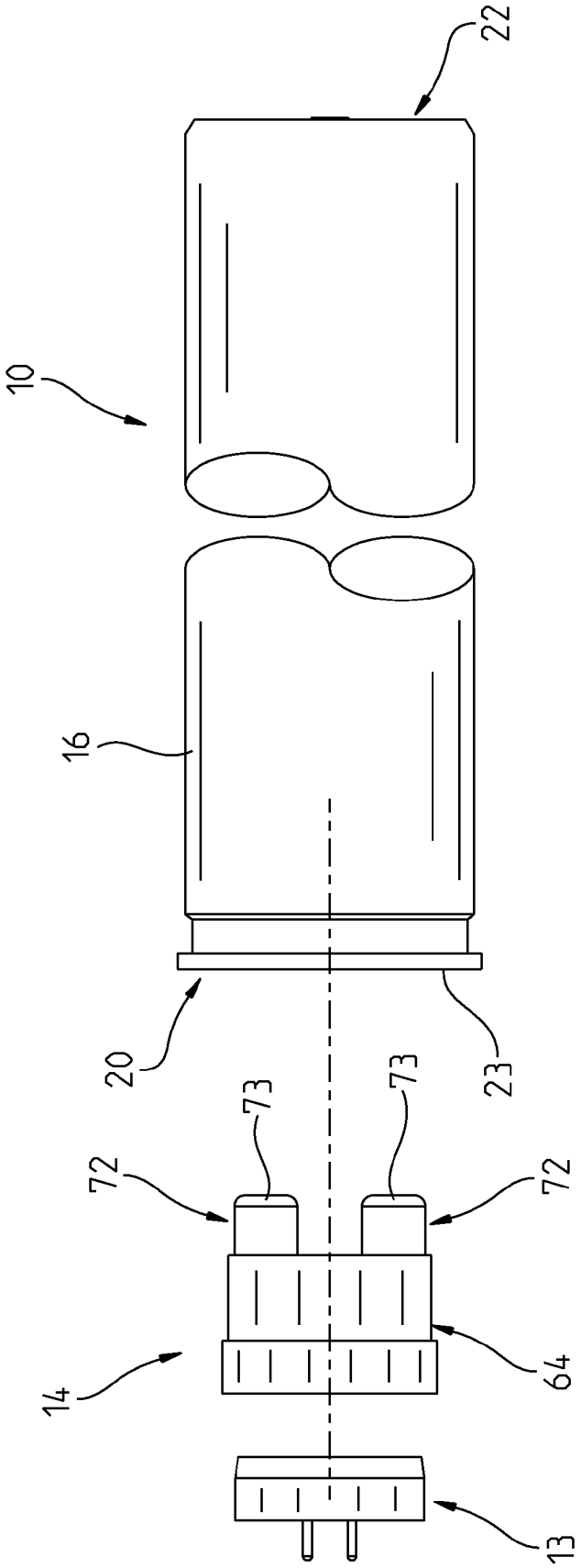


FIG. 2

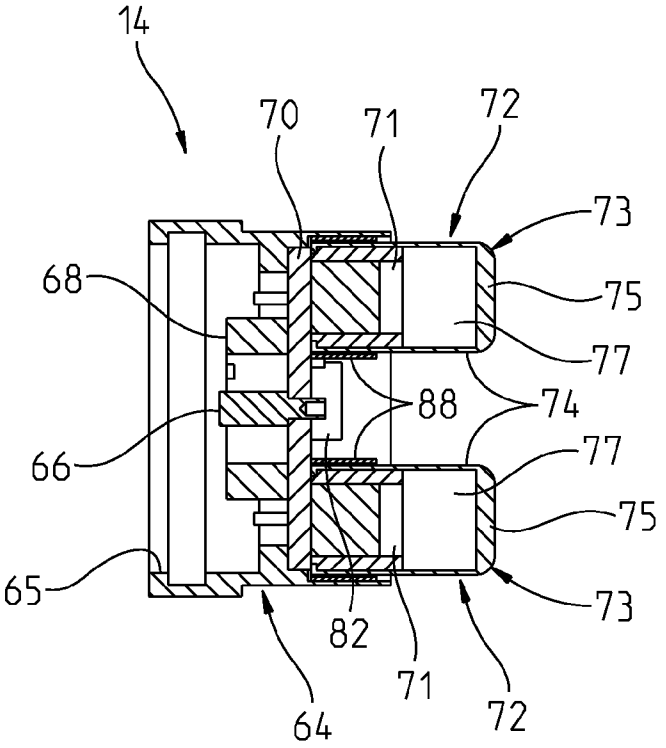
14
70
71
72
73
68
75
77
88
74
66
77
75
65
73
82
71
64
72

FIG. 3A

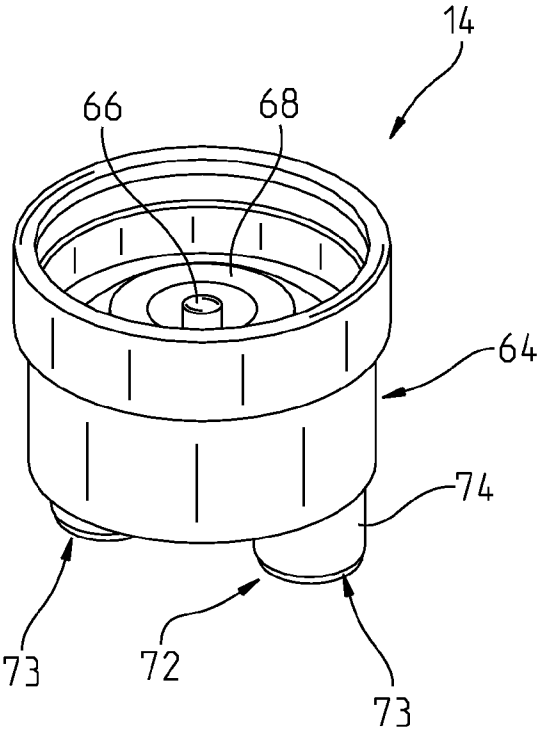
14
66
68
64
74
73
72
73

FIG. 3B

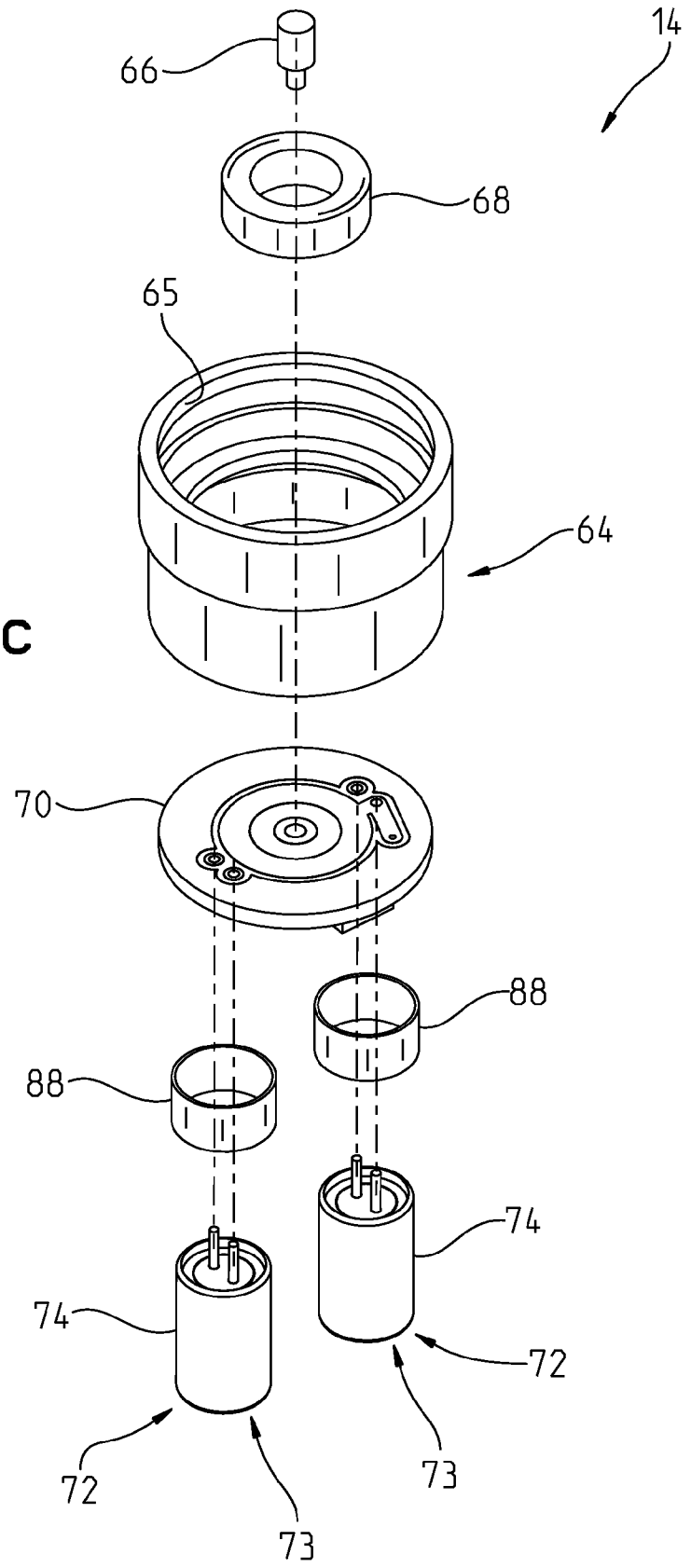


FIG. 3C

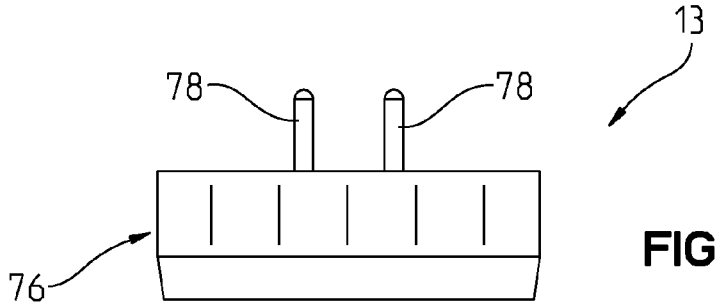


FIG. 4A

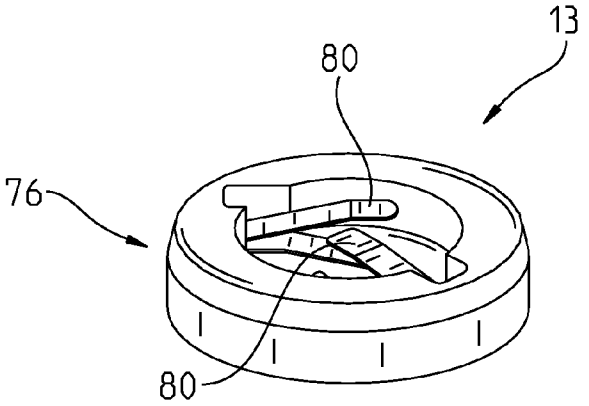


FIG. 4B

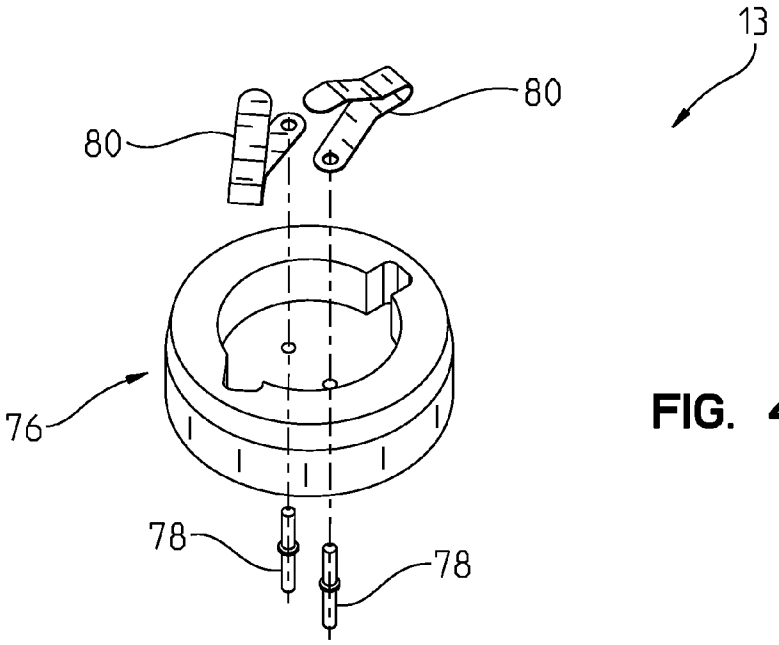


FIG. 4C

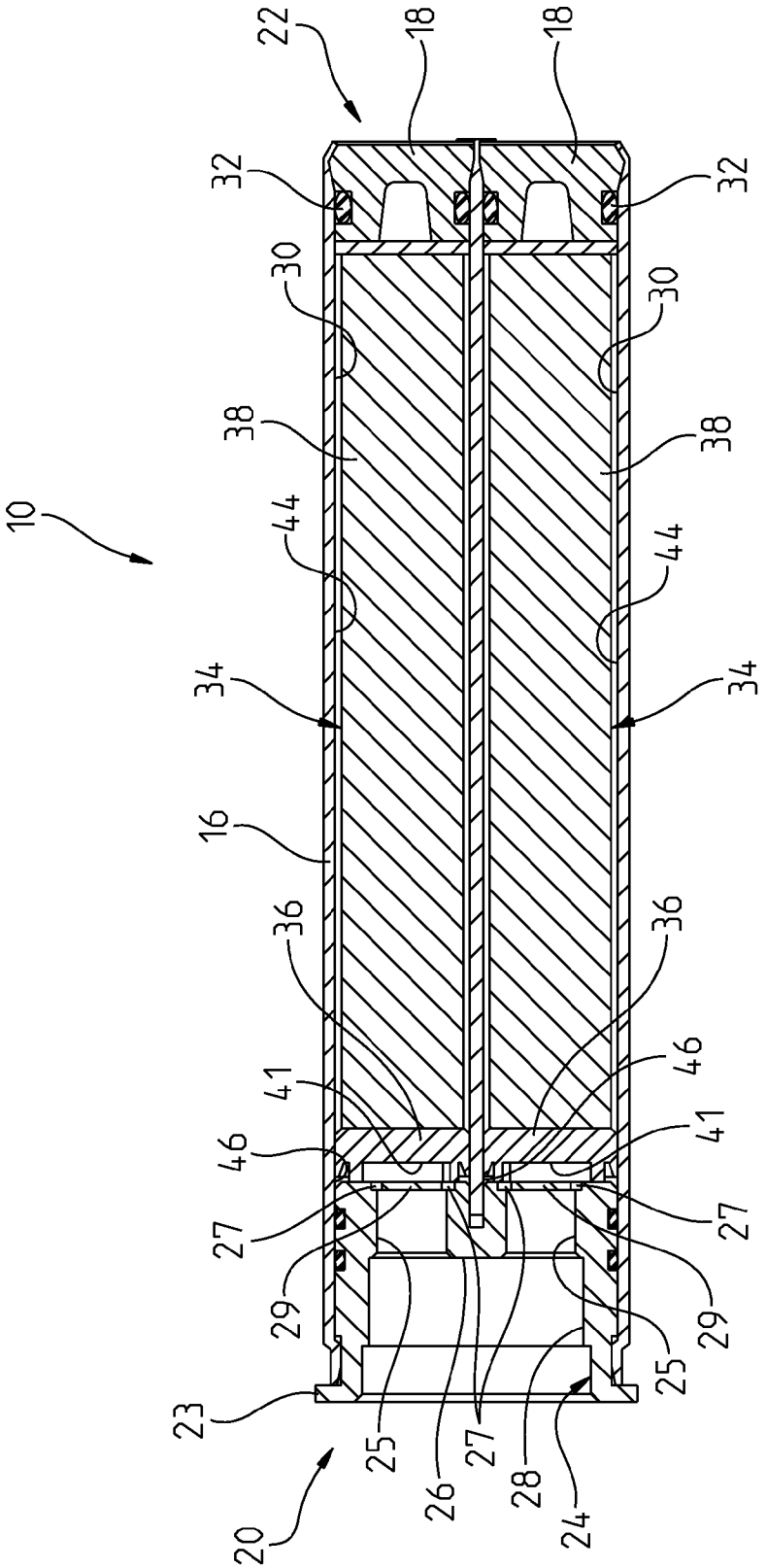


FIG. 5

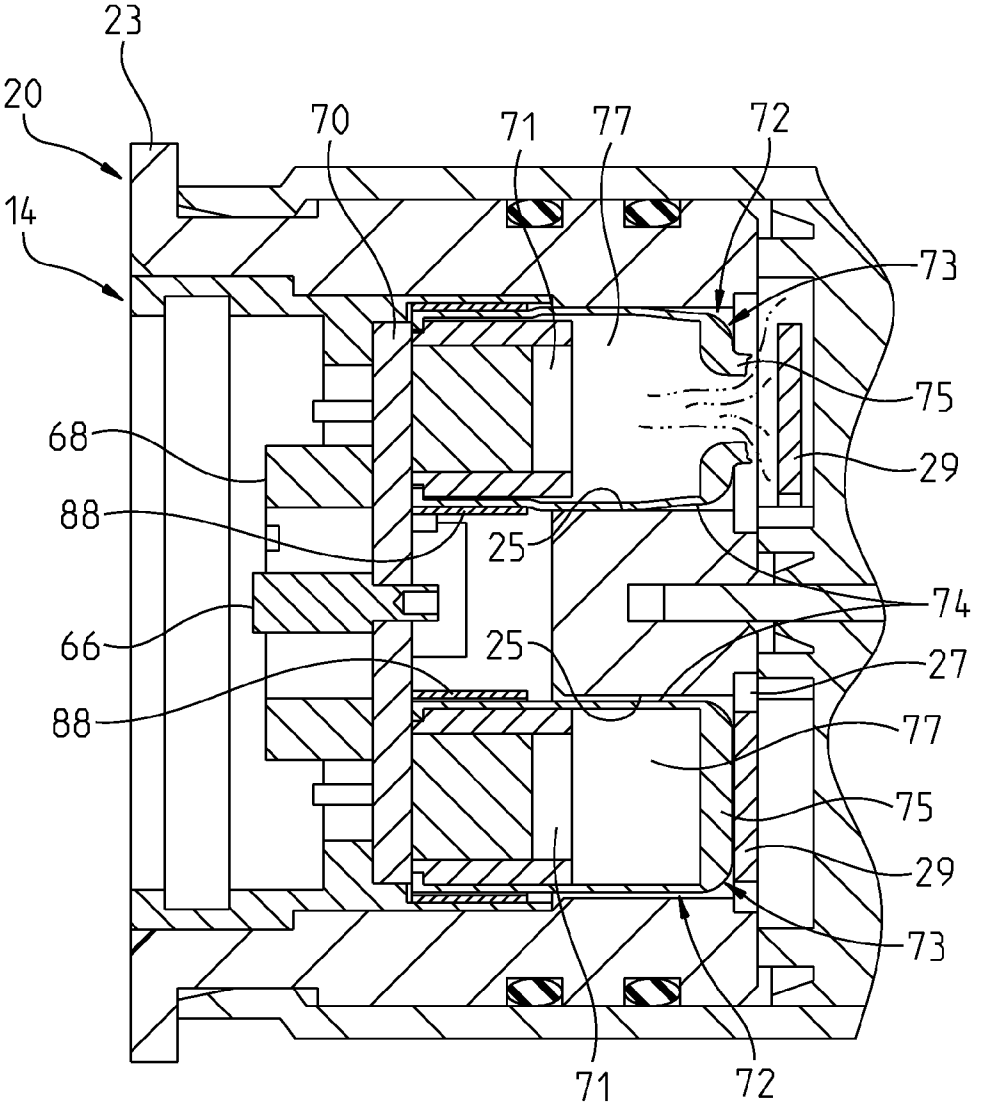


FIG. 6

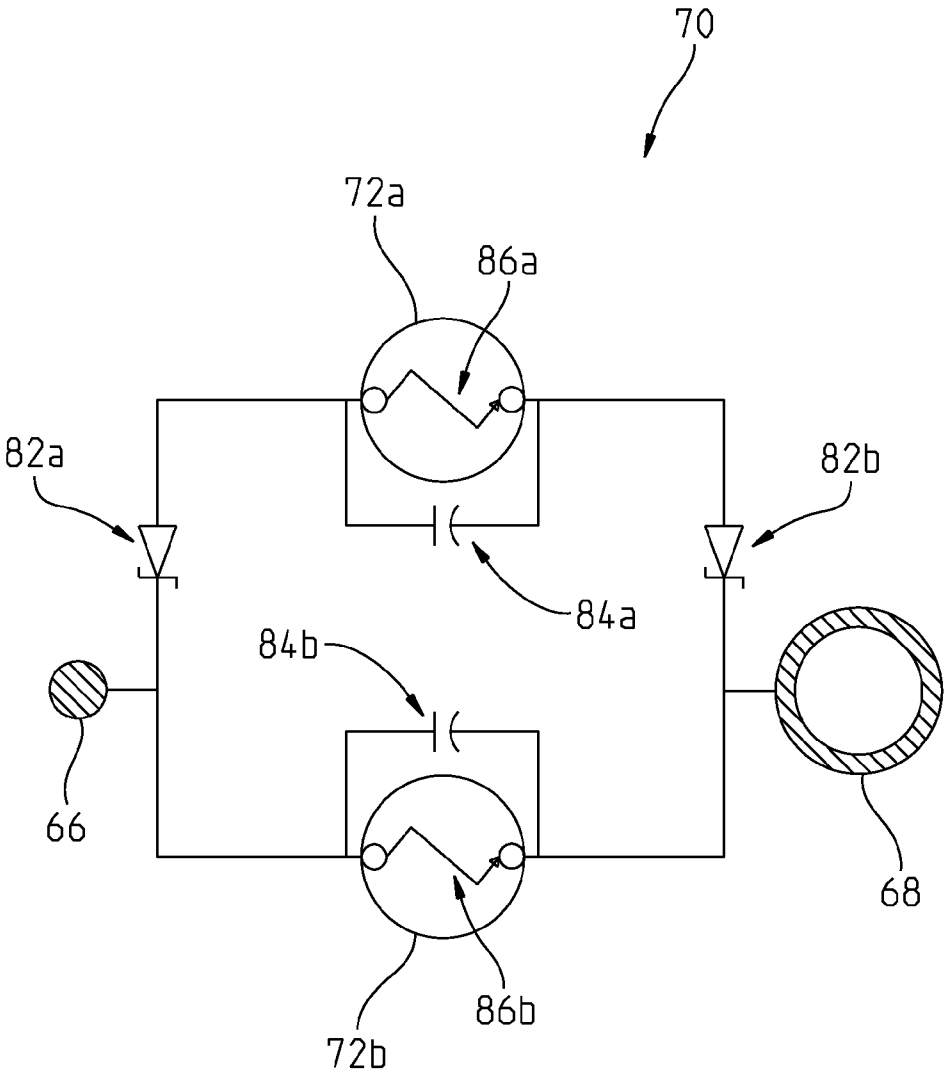


FIG. 7

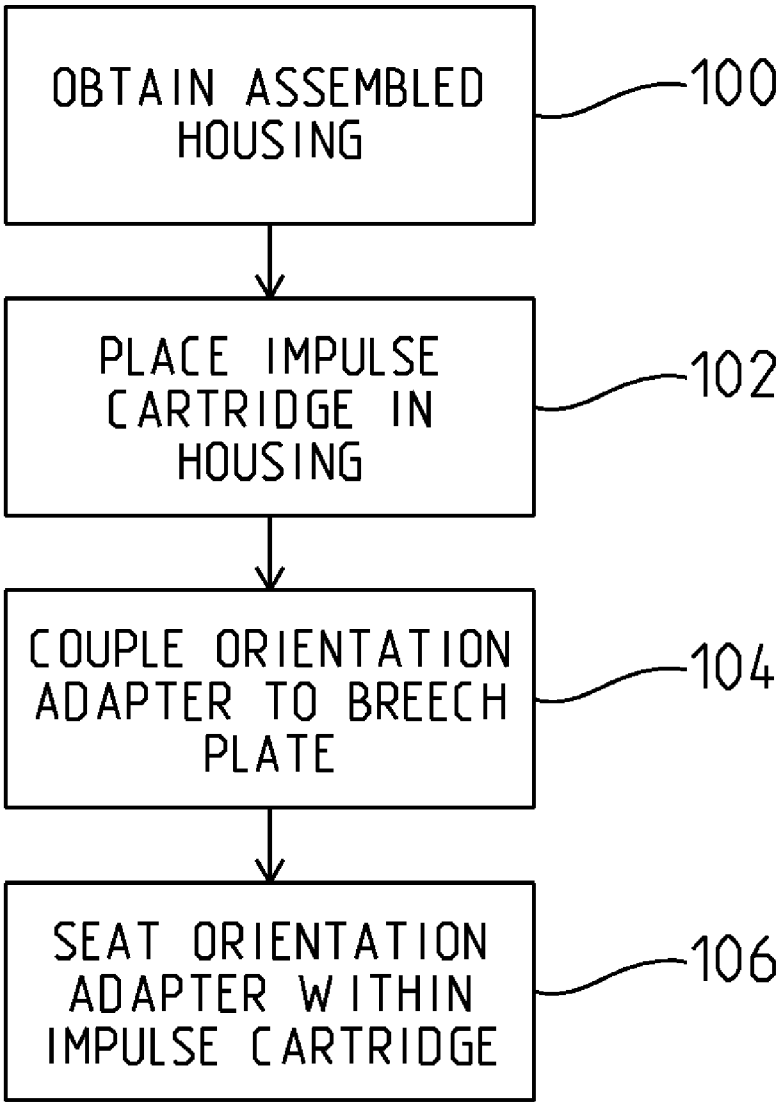
OBTAIN ASSEMBLED HOUSING
100
PLACE IMPULSE CARTRIDGE IN HOUSING
102
COUPLE ORIENTATION ADAPTER TO BREECH PLATE
104
SEAT ORIENTATION ADAPTER WITHIN IMPULSE CARTRIDGE
106

FIG. 8

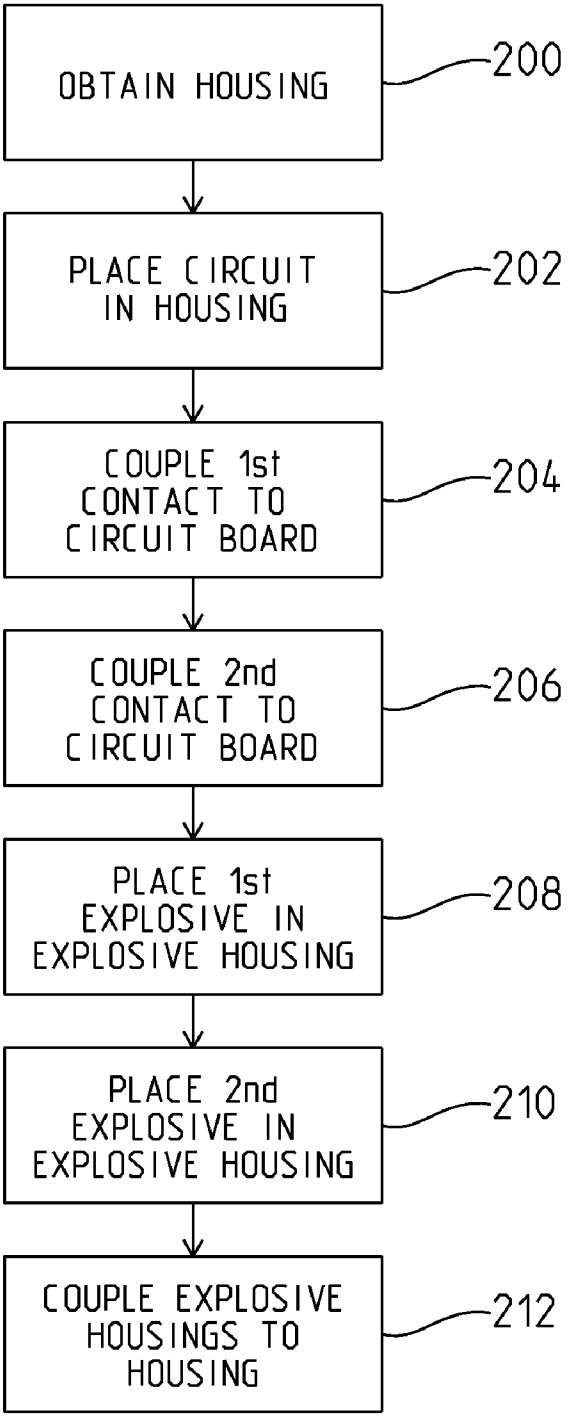
OBTAIN HOUSING
200
PLACE CIRCUIT IN HOUSING
202
COUPLE 1st CONTACT TO CIRCUIT BOARD
204
COUPLE 2nd CONTACT TO CIRCUIT BOARD
206
PLACE 1st EXPLOSIVE IN EXPLOSIVE HOUSING
208
PLACE 2nd EXPLOSIVE IN EXPLOSIVE HOUSING
210
COUPLE EXPLOSIVE HOUSINGS TO HOUSING
212

FIG. 9

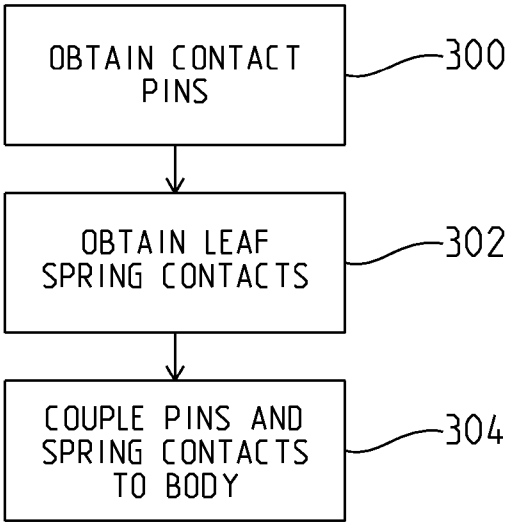
OBTAIN CONTACT PINS
300
OBTAIN LEAF SPRING CONTACTS
302
COUPLE PINS AND SPRING CONTACTS TO BODY
304

FIG. 10

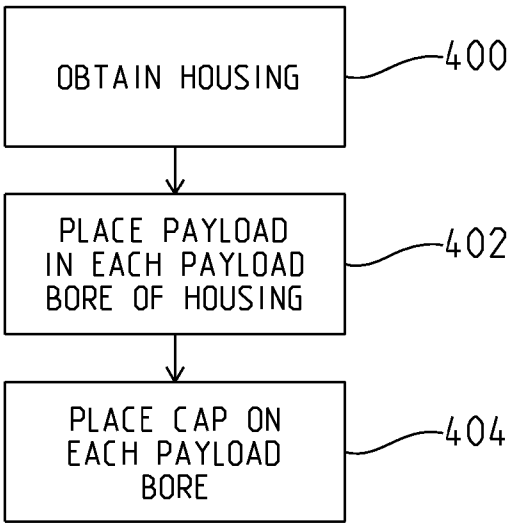
OBTAIN HOUSING
400
PLACE PAYLOAD IN EACH PAYLOAD BORE OF HOUSING
402
PLACE CAP ON EACH PAYLOAD BORE
404

FIG. 11

# IMPULSE CARTRIDGE

## CROSS-REFERENCE TO RELATED APPLICATION

This application is a continuation of and claims priority to U.S. patent application Ser. No. 12/726,850 filed Mar. 18, 2010 now U.S. Pat. No. 8,267,014, the disclosure of which is expressly incorporated herein by reference. This application further claims priority to U.S. Provisional Patent Application Ser. No. 61/289,242, filed Dec. 22, 2009, the disclosure of which is also expressly incorporated by reference herein.

## STATEMENT REGARDING FEDERALLY SPONSORED RESEARCH OR DEVELOPMENT

The invention described herein includes contributions by one or more employees of the Department of the Navy made in performance of official duties and may be manufactured, used, licensed by, or for the United States Government without payment of any royalties thereon.

## BACKGROUND AND SUMMARY

The present disclosure relates generally to ejectors. More particularly, the present disclosure relates to ejectors having multiple bays and various components present to facilitate ejection therefrom.

According to one aspect of the present disclosure, an impulse cartridge is provided including: a housing; a plurality of squib cups, each squib cup containing an electrically activatable charge; two electrical input contacts; and circuitry that selectively transmits energy from the input contacts to the electrically activatable charges, the circuitry configured to apply energy to a first charge of the electrically activatable charges independently of application of energy to a second charge of the activatable charges, the circuitry operating consistently regardless of the polarity of the energy applied to the electrical input contacts.

According to another aspect of the present disclosure, an impulse cartridge is provided, the impulse cartridge including: a housing defining an internal bore; a first electrical contact, a second electrical contact encircling the first electrical contact, the first and second electrical contacts being located entirely within the internal bore, and an electrically activatable charge electrically coupled to the first and second electrical contacts.

According to another aspect of the present disclosure, an impulse cartridge is provided including: a housing; a plurality of squib cups, each squib cup containing an electrically activatable charge; two electrical input contacts; and circuitry including at least two diodes, the circuitry selectively transmitting energy from the input contacts to the electrically activatable charges, the circuitry configured to conduct a first voltage that is below a breakdown voltage for the at least two diodes to a first charge of the electrically activatable charges while preventing the first voltage from being conducted to the second charge of the electrically activatable charges, and the circuitry configured to conduct a second voltage to a second charge of the electrically activatable charges independently of the conduction of the first voltage to the first charge of the activatable charges.

According to another aspect of the present disclosure, an impulse cartridge is provided, the impulse cartridge including: a housing; a plurality of squib cups, each squib cup containing an electrically activatable charge; two electrical input contacts; and circuitry including at least two diodes.



The circuitry selectively transmits energy from the input contacts to the electrically activatable charges. The circuitry is configured to conduct a first voltage that is below a breakdown voltage for the at least two diodes to a first charge of the electrically activatable charges while preventing the first voltage from being conducted to the second charge of the electrically activatable charges. The circuitry is configured to conduct a second voltage to a second charge of the electrically activatable charges independently of the conduction of the first voltage to the first charge of the activatable charges.

According to another aspect of the present disclosure, an interface sealing device is provided including: a first metal housing including a first explosive charge therein, the first metal housing having a first surface and a second surface; an outer wall adjacent the first metal housing, the first surface being expandable upon receiving a first amount of force from activation of the first explosive charge, expansion of the first metal housing providing sealing of an interface between the first surface of the first metal housing and the outer wall adjacent thereto, the first surface configured to maintain its sealing integrity up to a third amount of force generated by the first explosive charge, the second surface predictably failing when experiencing a second amount of force generated by the first explosive charge, the third amount of force being greater than the second amount of force and the second amount of force being greater than the first amount of force.

Additional features of the present disclosure will become apparent to those skilled in the art upon consideration of the following detailed description of the presently perceived best mode of carrying out the disclosure.

## BRIEF DESCRIPTION OF THE DRAWINGS

The detailed description of the drawings particularly refers to the accompanying figures in which:

FIG. **1** is a partially exploded perspective view of an illustrative projectile ejection device disposed in a block for holding multiple projectile devices, an impulse cartridge, and an orientation adapter coupled to a breech plate;

FIG. **2** is an exploded view of the projectile device, impulse cartridge, and orientation adapter of FIG. **1**;

FIG. **3**A is a cross-sectional view of the impulse cartridge of FIG. **1**;

FIG. **3**B is a perspective view of the impulse cartridge of FIG. **1**;

FIG. **3**C is an exploded view of the impulse cartridge of FIG. **1**;

FIG. **4**A is a plan view of the orientation adapter of FIG. **1**;

FIG. **4**B is a bottom perspective view of the orientation adapter of FIG. **1**;

FIG. **4**C is an exploded view of the orientation adapter of FIG. **1**;

FIG. **5** is a cross-sectional view of the projectile device of FIG. **1**; and

FIG. **6** is a cross-sectional view of the projectile device of FIG. **1** with one charge detonated;

FIG. **7** is a schematic view of the circuitry present in the impulse cartridge of FIG. **1**;

FIG. **8** is a flowchart showing steps taken to assemble the projectile device of FIG. **1**;

FIG. **9** is a flowchart showing the steps taken to assemble the impulse cartridge of FIG. **1**;

FIG. **10** is a flowchart showing the steps taken to assemble the orientation adapter of FIG. **1**; and

FIG. **11** is a flowchart showing the steps taken to manufacture the projectile device of FIG. **1**.

## DETAILED DESCRIPTION OF THE DRAWINGS

FIG. **1** shows projectile system **8** including a projectile device **10** partially disposed in block **12**, shows impulse cartridge **14** positioned for installation in projectile device **10**, and shows orientation adapter **13** coupled to breech plate **15** and positioned for installation in impulse cartridge **14**.

Projectile device **10** includes housing **16** and end caps **18**. Housing **16** is illustratively metallic (such as aluminum), substantially cylindrical, and includes propellant end **20** and ejection end **22**, (step **400**).

Propellant end **20** includes cartridge retainer **23** having bore **24** sized and shaped to receive impulse cartridge **14** therein. Bore **24** is defined within propellant end **20** as a multi-diametered bore having base wall **26** and side wall **28**. Base wall **26** is formed having pockets **25** that receive portions of impulse cartridge **14** therein. Pockets **25** contain areas of reduced wall thickness **27** relative to other wall portions such that it forms shear disks **29** that are discussed in more detail below.

Ejection end **22** is opposite propellant end **20** and illustratively includes payload bores **30** having a depth that takes up substantially all the length of housing **16** (excluding that portion of the length used to define bore **24** in propellant end **20**, see FIG. **5**). Payload bores **30** are sized to at least partially receive end caps **18** therein. End caps **18** include gaskets **32** that provide a seal between end caps **18** and the interior walls of payload bores **30**.

As shown most clearly in FIG. **5**, payload bores **30** illustratively receive payloads **34** therein (step **402**). Payloads **34** include pistons **36** and projectiles **38**. While the present disclosure shows projectiles **38** having multiple components, the concepts of the current disclosure can be used in many projectile accelerating applications and many pressure sealing applications. Once payloads **34** are within payload bores **30**, end caps **18** are applied, (step **404**).

Pistons **36** approximate pieces having a compressible perimeter slightly larger than the inner dimensions of payload bores **30**. In this manner, pistons **36** separate payload bore **30** into fore chamber **44** and rear chamber **46**. Furthermore, pistons **36** serve as a surface upon which pressure generated in rear chamber **46** can act, as discussed below. Projectile **38** is located in fore chamber **44**. Pistons **36** may also include bores **41**, FIG. **5**, that are sized and shaped to receive igniter pellets therein. Alternatively, bores **41** do not receive igniter pellets therein but rather provide clearance space for the intrusion of shear disks **29**.

Impulse cartridge (I/C) **14**, FIGS. **3**A-C, is illustratively an electrically activated impulse cartridge. I/C **14** includes a substantially cylindrical housing **64**, post contact **66**, annular contact **68**, circuitry **70**, and squibs **72**. Housing **64** is illustratively constructed from metal, such as aluminum. Housing **64** has an external profile sized to be received in bore **24**. Housing **64** further includes connection bore **65** disposed therein. (Step **200**)

Circuitry **70**, FIG. **7**, is located in bore **65**, step **202**, and is in electrical communication with post contact **66**, step **204**, and annular contact **68**, step **206**, and includes Zener diodes **82**, capacitors **84**, and bridge wires **86** within squibs **72**. It should be appreciated that while FIG. **9** shows step **202** occurring before steps **204** and **206**, steps **204** and **206** could occur before step **202**. Squibs **72** are intended to fire based on two distinct and different firing voltages (a low and a high voltage) being provided from an external controller **90**. Circuitry **70**, when receiving a low voltage, allows direct current to flow to bridgewire **86***b* of squib **72***b* and inhibits current flow (via Zener diodes **82***a*&*b*) to bridgewire **86***a* of second squib **72***a*. Zener diodes **82***a*&*b* permit current flow in a forward direction like a normal diode, but also permit flow in the reverse direction if the supply voltage is larger than the breakdown voltage of diode **82**. Hence, if the voltage applied is lower than the Zener breakdown voltage, squib **72***b* will see current at bridgewire **86***b* which will heat the wire and ignite ignition mix **71**. Subsequently, bridgewire **86***a* of squib **72***a* will not see current flow until a higher voltage is applied and breaks down one of Zener diodes **82***a*&*b*. Given that Zener diodes **82** are directional, circuitry **70** is wired with two diodes **82** (one on each side of the high side squib **72***a*/bridge wire **86***a*) such that regardless of the polarity imparted on post contact **66** and annular contact **68**, impulse cartridge **14** is able to operate as desired. Stated another way, for a first polarity, Zener diode **82***a* freely allows flow there across, but Zener diode **82***b* requires the application of a breakdown voltage before flow there across is allowed. Thus, because Zener diode **82***b* is in the same trace as Zener diode **82***a*, for the first polarity, Zener diode **82***b* must be broken down before flow through either Zener diode **82***a*&*b* is permitted. Similarly, for a second polarity, opposite the first polarity, Zener diode **82***b* freely allows flow there across, but Zener diode **82***a* requires the application of a breakdown voltage before flow there across is allowed. Thus, because Zener diode **82***a* is in the same trace as Zener diode **82***b*, for the second polarity, Zener diode **82***a* must be broken down before flow through either Zener diode **82***a*&*b* is permitted. Accordingly, regardless of the polarity of the applied voltage signal, one of the Zener diodes **82***a*&*b* must be broken down to allow the signal to reach bridge wire **86***a* of squib **72***a*. Controlling the voltage to I/C **14** results in the ability to independently fire the multiple bays of the ejector.

To allow impulse cartridge **14** to be HERO (Hazards of Electromagnetic Radiation to Ordnance) safe, various features were also incorporated into the design to reduce its sensitivity to outside electromagnetic radiation: housing **64** is constructed of an aluminum that is nickel plated; a flexible EMI absorption ferrite shield (not shown) is applied to the backside of impulse cartridge **14** between the post contact **66**, annular contact **68** and the housing **64**, and capacitors **84** are applied across bridge wires **86** of each squib **72**.

Squibs **72** each include squib cups **73** that contain ignition mix **71** and expellant charge **77**, steps **208**, **210**. Expellant charge **77** is illustratively smokeless powder and ignition mix **71** is a titanium and potassium perchlorate based blend. Ignition mix **71** is ignitable by an electric signal transmitted from circuitry **70** to bridge wire **86**. Expellant charge **77** is ignitable by activated ignition mix **71**. Squib cups **73** are constructed from soft aluminum, coupled to housing **64** (step **212**), and sized to be a slip fit into cavity **25**. When internally pressurized, the soft aluminum of each squib cup **73** is able to swell and expand outward and seal against the walls of cavity **25** and shown in FIG. **6**. To prevent an undesired failure of squib cups **73** within impulse cartridge **14**, stainless steel obturating rings **88** are installed around the portions of squib cups **73** retained within impulse cartridge **14** and not intended to swell. Furthermore, squib cups **73** are designed to predictably fail to allow the escape of pressurized gas into contact with shear disks **29**. Accordingly, as the expellant charge is ignited and generates explosive pressure, the pressure first reaches a pressure that causes the sides of squib cups **73** to expand. As pressure continues to build to a second pressure, a second portion of squib cups **73**, such as the bottoms, predictably fail to release the building pressure of hot gases and particulate.

Squib cups **73** undergo hard coat anodizing. Hard coat anodizing of the aluminum squib cups **73** reduces the frictional force required to remove the fired impulse cartridge **14** or swelled squibs **72** from cavities **25** in the projectile device **10**.

Orientation adapter **13** includes body **76**, contact pins **78** (step **300**), and spring contacts **80** (Step **302**). Body **76** is sized to seat within connection bore **65**. Body **76** is constructed from an electrical insulator such as plastic. Contact pins **78** extend from body **76**. Contact pins **78** are further sized and spaced to be received in contact sockets (not shown) in breech plate **15**. Contact pins **78** are electrically coupled to spring contacts **80** and the connection extends through body **76**, step **304**. Spring contacts **80** are illustratively copper beryllium leaf springs which have been copper, silver, and gold plated to interface with post contact **66** and annular contact **68**. Post contact **66** and annular contact **58** are fabricated from brass and also copper, silver, and gold plated. The beryllium copper based spring contacts with aforementioned plating maintain continuity with post contact **66** and annular contact **68** in an operational environment. Spring contacts **80** are positioned such that when located within connection bore **65** of cartridge retainer **23** one spring contact **80** engages post contact **66** and one spring contact engages annular contact **68**. As noted with respect to circuitry **70**, it is irrelevant which of contact pins **78** is electrically coupled to each of spring contacts **80** and eventually post contact **66** and annular contact **68**. Furthermore, circuitry **70** renders irrelevant which contact pin **78** engages which receiving bore (not shown) in breech plate **15**. It should be appreciated that one spring contact **80** engages post contact **66** and one spring contact **80** engages annular contact **68** regardless of the angular orientation that the orientation adapter **13** assumes relative to I/C **14**. Indeed, orientation adapter **13** can be rotated relative to I/C **14** when seated within connection bore **65** while maintaining electrical contact between orientation adapter **13** and I/C **14**.

Once projectile device **10** is assembled, step **100**, FIG. **8**, all of the components located in payload bore **30**, including end cap **18** are assembled and stored in the assembled condition. In further assembly, at some point, such as just before being loaded into a magazine block **12**, impulse cartridge **14** is seated within bore **24**, step **102**. When so placed, impulse cartridge **14** is aligned within bore **24** such that squib cups **73** are aligned with pockets **25**. However, it should be appreciated that housing **16** and projectile device **10** may assume any rotational orientation when placed in block **12**. Additionally, breech plate **15** defines a set orientation in which it can receive contact pins **78** of orientation adapter **13**. Accordingly, orientation adapter **13** is electrically coupled to breech plate **15**, step **104**. This assembly is completed for a plurality of impulse cartridges **14**, projectile devices **10**, and orientation adapters **13**.

Once projectile devices **10** with impulse cartridges **14** are placed in block **12** and orientation adapters **13** are coupled to breech plate **15**, the plurality of orientation adapters **13** are placed within respective bores **24** to complete assembly, step **106**. The assembled block **12** and breech plate **15** is then ready to be loaded into a receiver (not shown) and ready to be coupled to an ignition source (not shown).

However, it should be appreciated that un-activated impulse cartridge **14** can readily be separated from housing **16** without harming any of the components and maintaining a hermetic seal of device **10**. Notably, when a magazine block **12** is removed from its receiver and projectile devices **10** are removed from the magazine block, impulse cartridges **14** are removed from bore **24** to allow independent storage of projectile device **10** having a decreased likelihood of unintentional activation. Accordingly, in an unpressurized (or ambiently pressurized) state, housing **16** provides a slip fit with impulse cartridge **14** that imparts a first coefficient of friction between housing **16** and housing **64** that is very low and only slightly discourages I/C **14** from falling out of bore **24**. The first coefficient of friction can be easily overcome by an individual or automated process pulling I/C **14** from bore **24** or by gravity when inverting an assembled projectile device **10** while holding housing **16**.

In use, when properly positioned, end cap **18** is aimed and contact pins **78** are coupled to controller **90** which includes a voltage source. When directed, controller **90** imparts a voltage to pair of contact pins **78**. In the provided example, a first voltage (low voltage) imparted to contact pins **78** activates a first charge in squib **72** which contains ignition mix **71** and expellant charge **77**. Activation of contain ignition mix **71** and expellant charge **77** causes a rapid gas expansion or pressure to be applied to sides **74** and bottom **75** of first squib cup **73**. The outward expansion of sides **74** against bore **25** obstructs gases from flowing in a negative direction between squib cup **73** and bore **25**. Eventually, bottom **75** predictably fails and allows gas to fill the innermost portion of bore **25**. The gas is effectively trapped within squib cups **73** and bore **25**. The seal formed by explosively forming the side **74** of the soft aluminum squib cups **73** to the wall of bore **25** prevents soot from coming into contact with the electronic elements that impart voltage to contact pins **78** and also provides for improved ballistic consistency of payload **34** by minimizing gases bypassing around impulse cartridge **14** and out the propellant end **20** of projectile device **10**. When the pressure reaches a third level, portions of reduced wall thickness **27** in pressurized pocket **25** fracture and release shear disk **29**. The pressurized gas and hot particulate is then able to expand into rear chamber **46** of payload bore **30**. A firing of an projectile device **10** is expected to generate between 1400-2000 psi within rear chamber **46** and bore **24**.

As gas and hot particulate accumulates in rear chamber **46** of payload bore **30**, piston **36** is urged away from propellant end **20** and towards ejection end **22**. This urging results in expelling/deployment of end cap **18** and payload **34** from payload bore **30**. If needed, the hot particulate from squib **72** can be sufficient to provide ignition transfer to payload **34**.

Although the disclosure has been described in detail with reference to certain preferred embodiments, variations and modifications exist within the spirit and scope of the disclosure as described and defined in the following claims.

The invention claimed is:

**1**. An impulse cartridge system including:

a housing comprising a plurality of cavities;

a plurality of squib cups, each squib cup containing an electrically activatable charge, said squib cups comprising a first and second surface, the first surface being expandable upon receiving a first amount of force from activation of the electrically activatable charge, expansion of the squib cup providing sealing of an interface between the first surface and a wall of an adjacent one of said plurality of cavities thereto, the first surface configured to maintain its sealing integrity up to a third amount of force generated by the electrically activatable charge, the second surface deforming or structurally failing when experiencing a second amount of force generated by the electrically activatable charge, the third amount of force being greater than the second amount of force and the second amount of force being greater than the first amount of force;

two electrical input contacts; and

circuitry that selectively transmits energy from the input contacts to the electrically activatable charges, the cir-

cuitry configured to apply energy to a first charge of the electrically activatable charges independently of application of energy to a second charge of the activatable charges, the circuitry operating consistently regardless of the polarity of the energy applied to the electrical input contacts.

**2**. The cartridge of claim **1**, wherein a first input applied to the two electrical contacts causes the circuitry to apply energy to the first activatable charge and a second input applied to the two electrical contacts causes the circuitry to apply energy to the second activatable charge.

**3**. The cartridge of claim **2**, wherein the first input is of a first voltage and the second input is of a second voltage, the first voltage being different from the second voltage.

**4**. The cartridge of claim **1**, wherein the circuitry provides for an input applied to the two electrical input contacts having a first polarity to break down a first diode and an input applied to the two electrical input contacts having a second polarity that is opposite of the first polarity provides for breaking down a second diode.

**5**. The cartridge of claim **1**, wherein the circuitry includes at least one Zener diode that provides for the activation of each electrically activatable charge to be independent of the activation of the other electrically activatable charge.

**6**. The cartridge of claim **5**, wherein a first sub-circuit is employed when input having a first voltage is applied to the two electrical input contacts and a second sub-circuit is employed when input having a second voltage is applied to the two electrical inputs contacts, the first and second sub-circuits being separated by the at least one Zener diode.

**7**. The cartridge of claim **6**, wherein the first sub-circuit can selectively activate a first charge of the activatable charges and the second sub-circuit can selectively activate a second charge of the activatable charges.

**8**. The cartridge of claim **6**, wherein the first voltage is below a breakdown voltage of the at least one zener diode and the second voltage is above the breakdown voltage of the at least one zener diode.

**9**. The cartridge of claim **1**, wherein said two electrical contacts comprise a post contact and an annular contact, wherein the housing provides a hazards of electromagnetic radiation to ordnance safe enclosure for the circuitry comprising

a housing constructed of an aluminum that is nickel plated; and

a flexible electromagnetic interference absorption shield positioned in proximity to said circuitry and formed between said post contact, annular contact and the housing;

wherein said cartridge further comprises capacitors applied across bridge wires of each said electrically activatable charges.

**10**. The cartridge of claim **1**, wherein the circuitry employs diodes that interact with the voltage of the input to the two electrical contacts to allow voltages below a diode breakdown voltage to complete a circuit across one of the squib cups and to prevent voltages below the diode breakdown voltage from completing a circuit across one of the squib cups.

**11**. The cartridge of claim **1**, further including programmable circuitry external to the housing, the programmable circuitry defining an amount of delay time between when a first input is applied to the two electrical contacts and when a second input is applied to the two electrical contacts.

**12**. The cartridge of claim **11**, further including a second metal housing including a second explosive charge therein, the second metal housing being similarly constructed as the first metal housing.

**13**. The cartridge of claim **1**, further comprising obturating rings installed around portions of said squib cups retained within said impulse cartridge, said rings are adapted to resist swelling upon activation of said electrically activatable charges.

**14**. The cartridge of claim **13**, wherein said obturating rings are formed from stainless steel.

* * * * *