US008001902B2

(12) **United States Patent**
Bass

(10) **Patent No.: US 8,001,902 B2**
(45) **Date of Patent: Aug. 23, 2011**

(54) **SIGNAL TRANSMISSION SURVEILLANCE SYSTEM**

(75) Inventor: **Jamie Bass**, Elnora, IN (US)

(73) Assignee: **The United States of America as represented by the Secretary of the Navy**, Washington, DC (US)

(*) Notice: Subject to any disclaimer, the term of this patent is extended or adjusted under 35 U.S.C. 154(b) by 216 days.

(21) Appl. No.: **12/248,383**

(22) Filed: **Oct. 9, 2008**

(65) **Prior Publication Data**

US 2010/0093270 A1 Apr. 15, 2010

(51) **Int. Cl.**
F42B 4/00 (2006.01)

(52) **U.S. Cl.** **102/387**; 102/354

(58) **Field of Classification Search** 102/387
See application file for complete search history.

(56) **References Cited**

U.S. PATENT DOCUMENTS

3,962,537	A	6/1976	Kearns et al.	
4,267,562	A	5/1981	Raimondi	
5,561,557	A	10/1996	Le Bris et al.	
5,905,943	A	5/1999	Wiedeman et al.	
6,056,237	A *	5/2000	Woodland	244/3.15
6,125,260	A	9/2000	Wiedeman et al.	
6,347,764	B1	2/2002	Brandon et al.	
6,764,041	B2	7/2004	Oron	
7,154,275	B2	12/2006	Zank et al.	
7,286,913	B2 *	10/2007	Bodin et al.	701/11
7,349,544	B2	3/2008	Tiwari	
D573,939	S *	7/2008	Las Heras	D12/319
7,472,866	B2 *	1/2009	Heaston et al.	244/63
D596,267	S *	7/2009	Colgren et al.	D12/319
7,679,037	B2 *	3/2010	Eden et al.	244/3.1
2004/0196367	A1	10/2004	Raymond et al.	
2005/0051667	A1	3/2005	Arlton et al.	
2006/0283345	A1	12/2006	Feldman et al.	
2007/0200927	A1	8/2007	Krenik	
2008/0059452	A1	3/2008	Frank	

FOREIGN PATENT DOCUMENTS

WO	WO 2004/057263	7/2004
WO	WO 2007/104152	9/2007

OTHER PUBLICATIONS

Aaron., K.M. et al., A Method for Balloon Trajectory Control, Global Aerospace Corp., Draft PSBI-0012, circa 2002.

* cited by examiner

Primary Examiner — Michael Carone
Assistant Examiner — Samir Abdosh
(74) *Attorney, Agent, or Firm* — Christopher A Monsey

(57) **ABSTRACT**

A system and method of detecting, processing, and selectively responding to radio frequency transmissions detected by at least one projectile deployed above a geographic area.

11 Claims, 8 Drawing Sheets

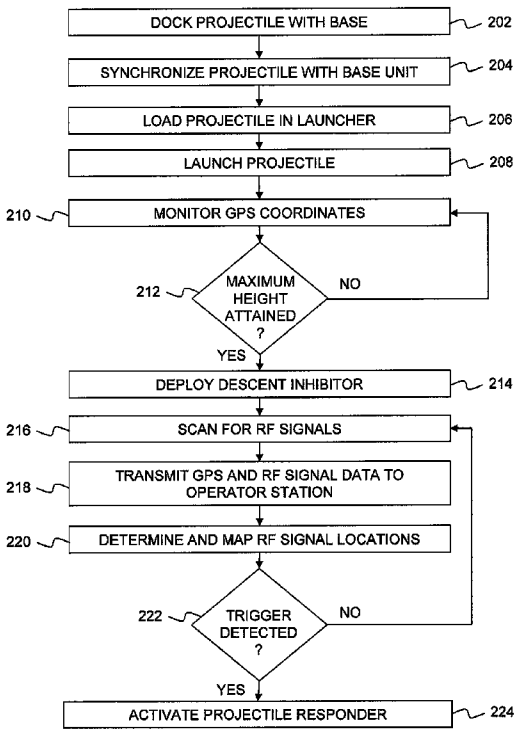

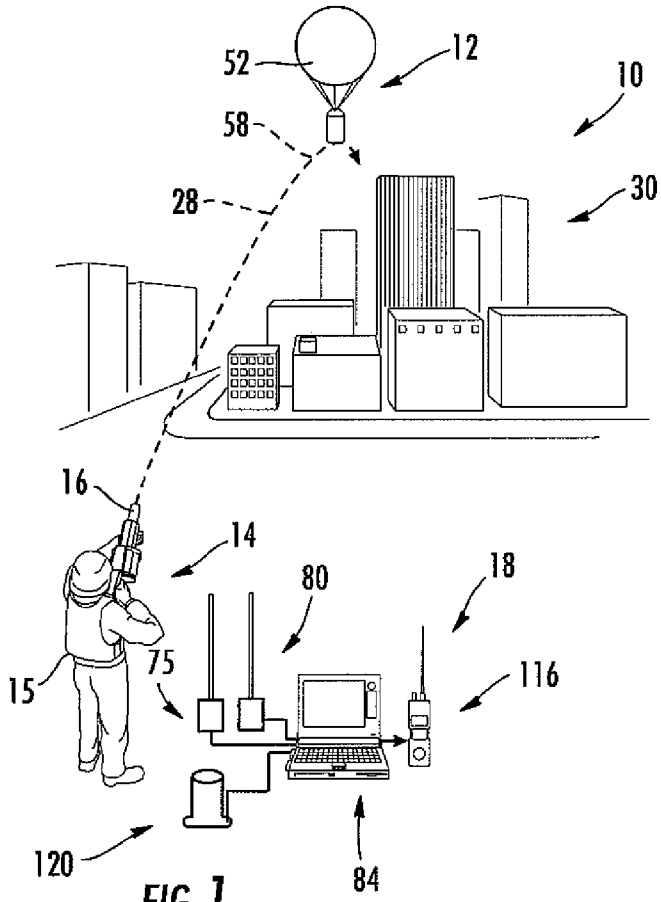
52
12
10
58
28
30
16
14
80
18
15
75
116
120
84

FIG. 1

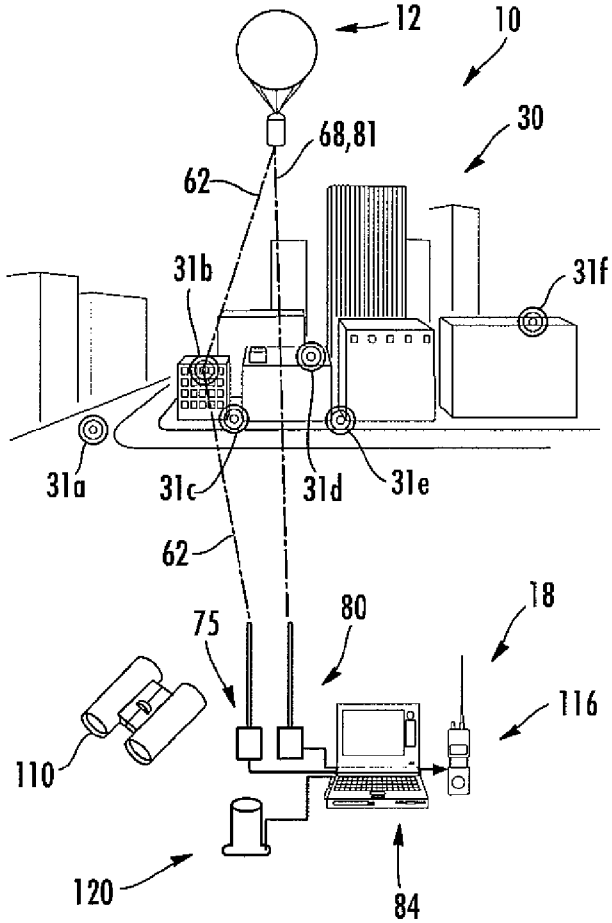
12
10
68,81
30
62
31b
31f
31a
31c
31d
31e
62
75
80
18
116
110
120
84

FIG. 2

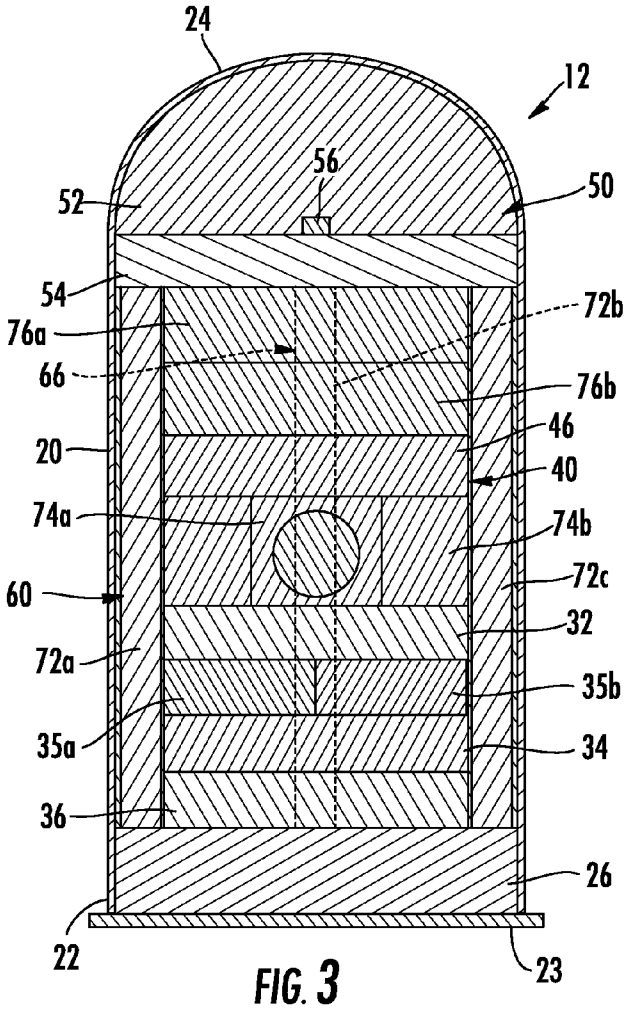
24
12
56
52
50
54
72b
76a
66
76b
46
20
40
74a
74b
72c
60
32
72a
35b
35a
34
36
26
22
23

FIG. 3

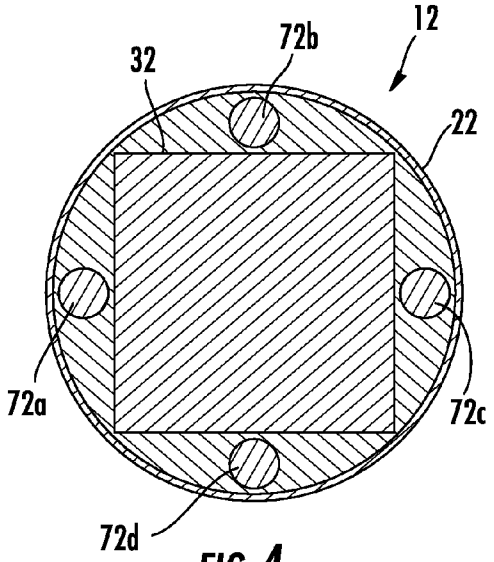
12
72b
32
22
72a
72c
72d

FIG. 4

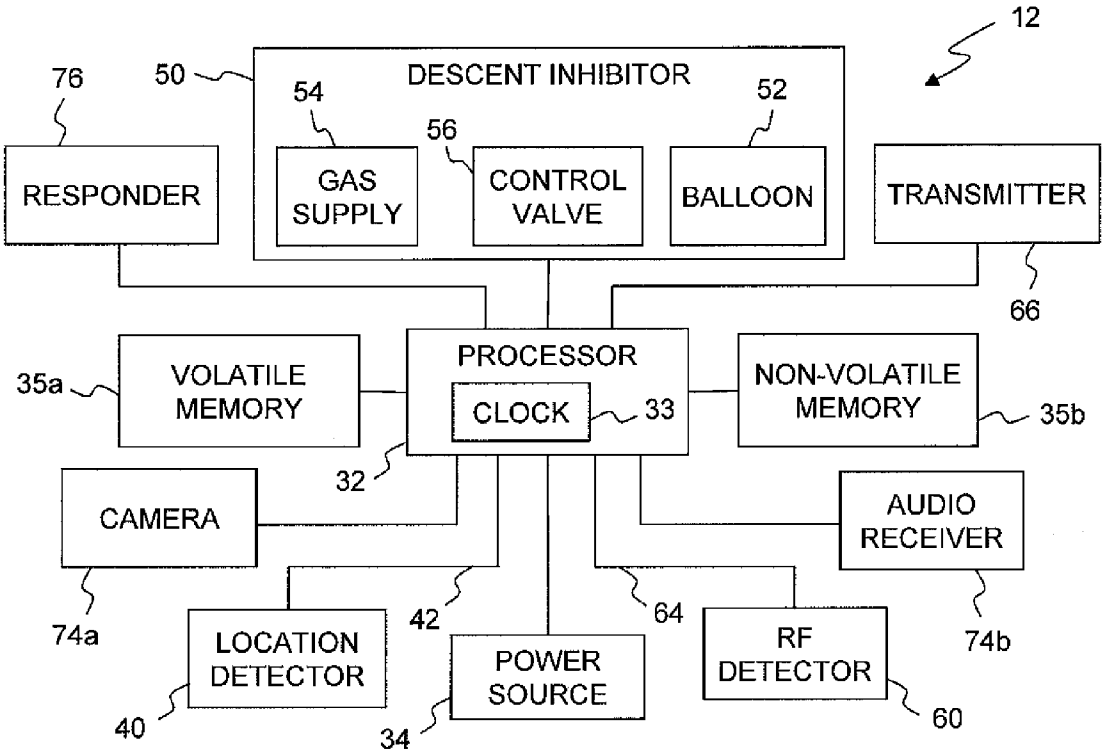
12
76
50
DESCENT INHIBITOR
54
52
56
RESPONDER
GAS SUPPLY
CONTROL VALVE
BALLOON
TRANSMITTER
66
35a
VOLATILE MEMORY
PROCESSOR
CLOCK
33
NON-VOLATILE MEMORY
35b
32
CAMERA
AUDIO RECEIVER
74a
42
64
74b
LOCATION DETECTOR
POWER SOURCE
RF DETECTOR
40
34
60

FIG. 5

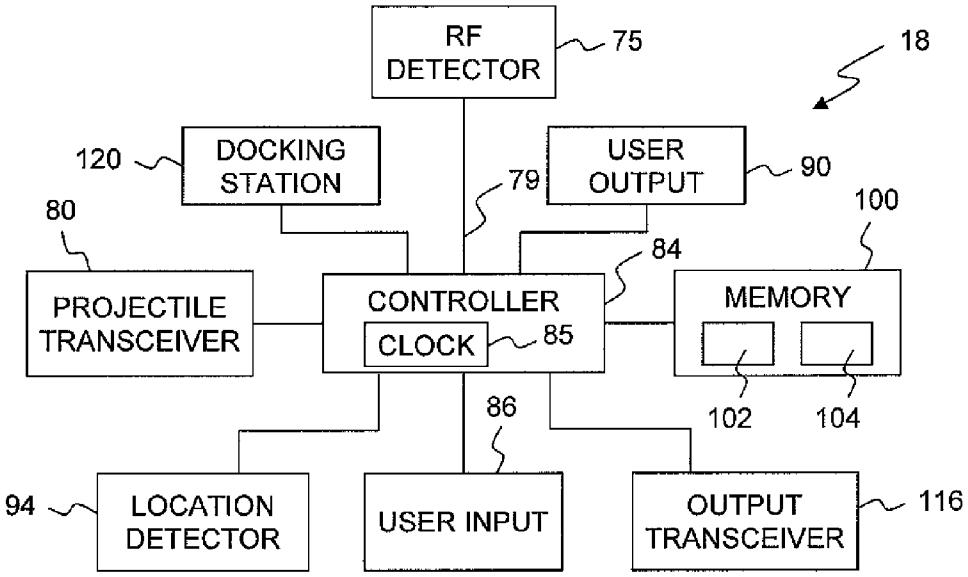
RF DETECTOR
75
18
120
DOCKING STATION
USER OUTPUT
90
79
80
100
84
PROJECTILE TRANSCEIVER
CONTROLLER
CLOCK
85
MEMORY
86
102
104
94
LOCATION DETECTOR
USER INPUT
OUTPUT TRANSCEIVER
116

FIG. 7

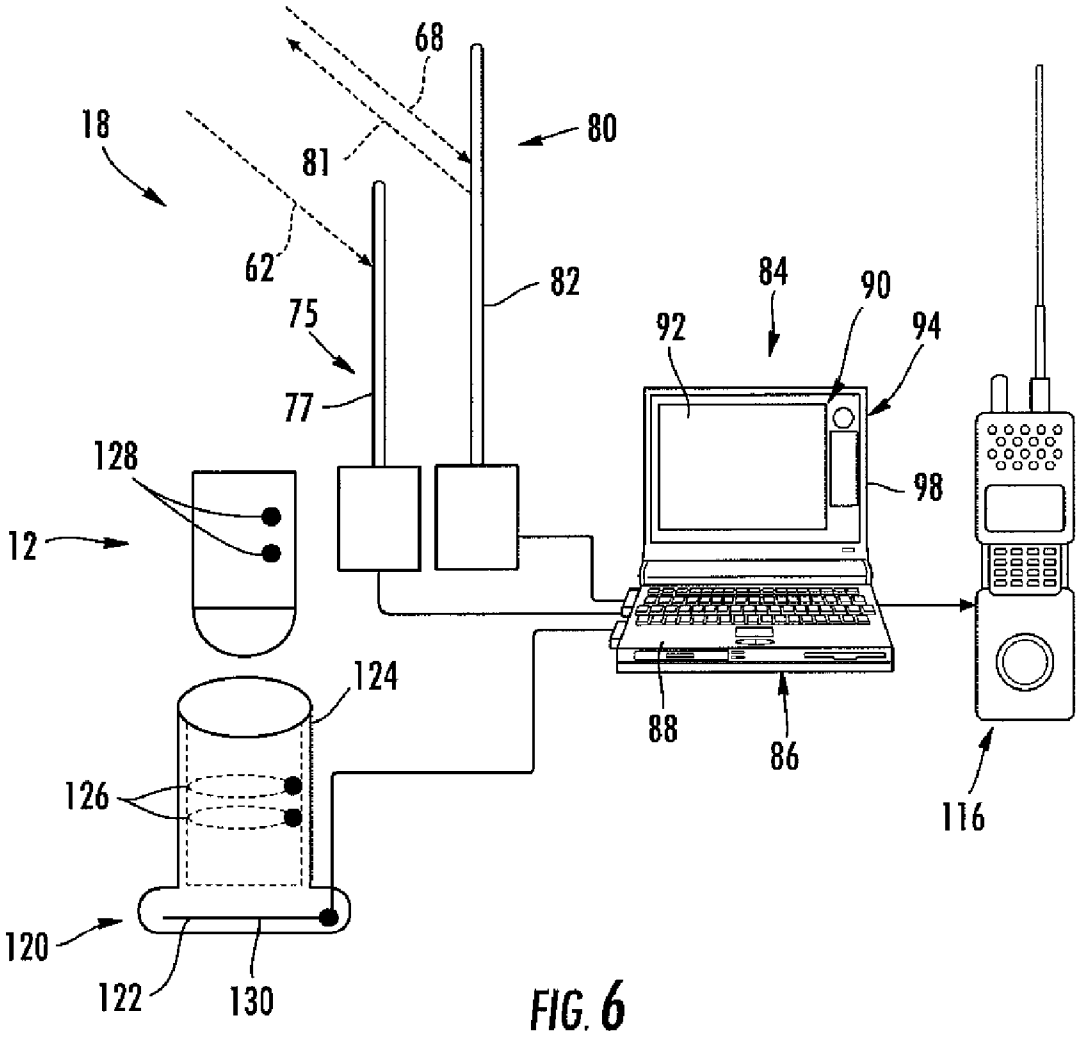
68
18
81
80
62
82
84
90
75
92
94
77
128
98
12
124
88
86
126
116
120
122
130

FIG. 6

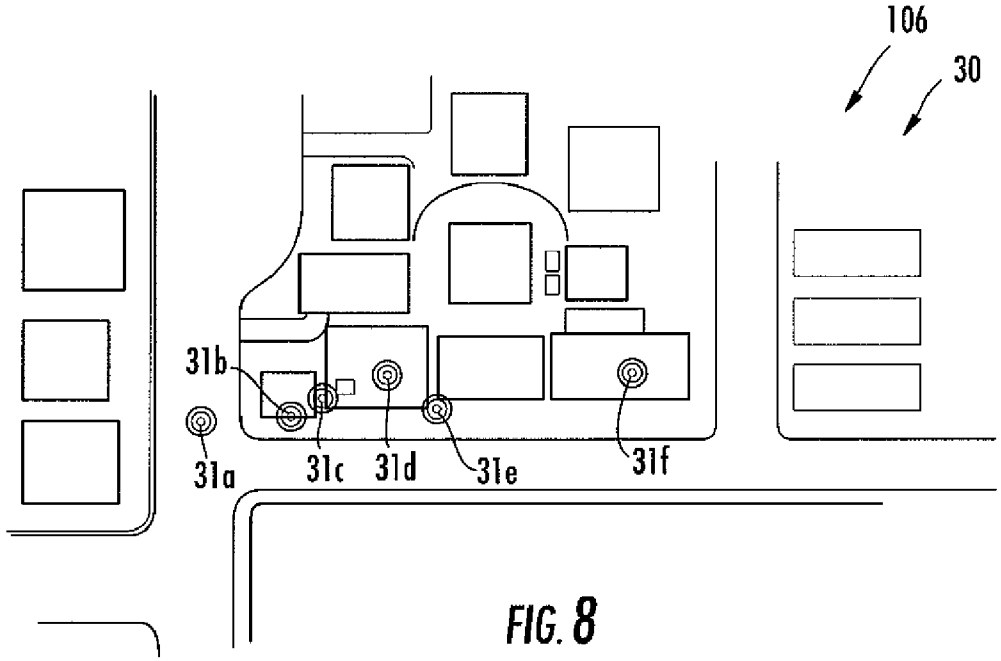

FIG. 8

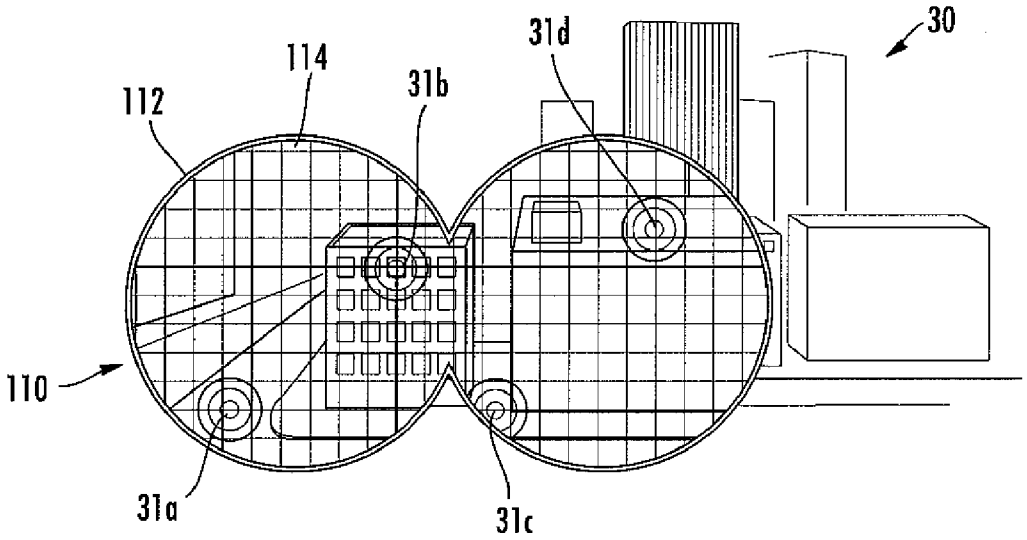

FIG. 9

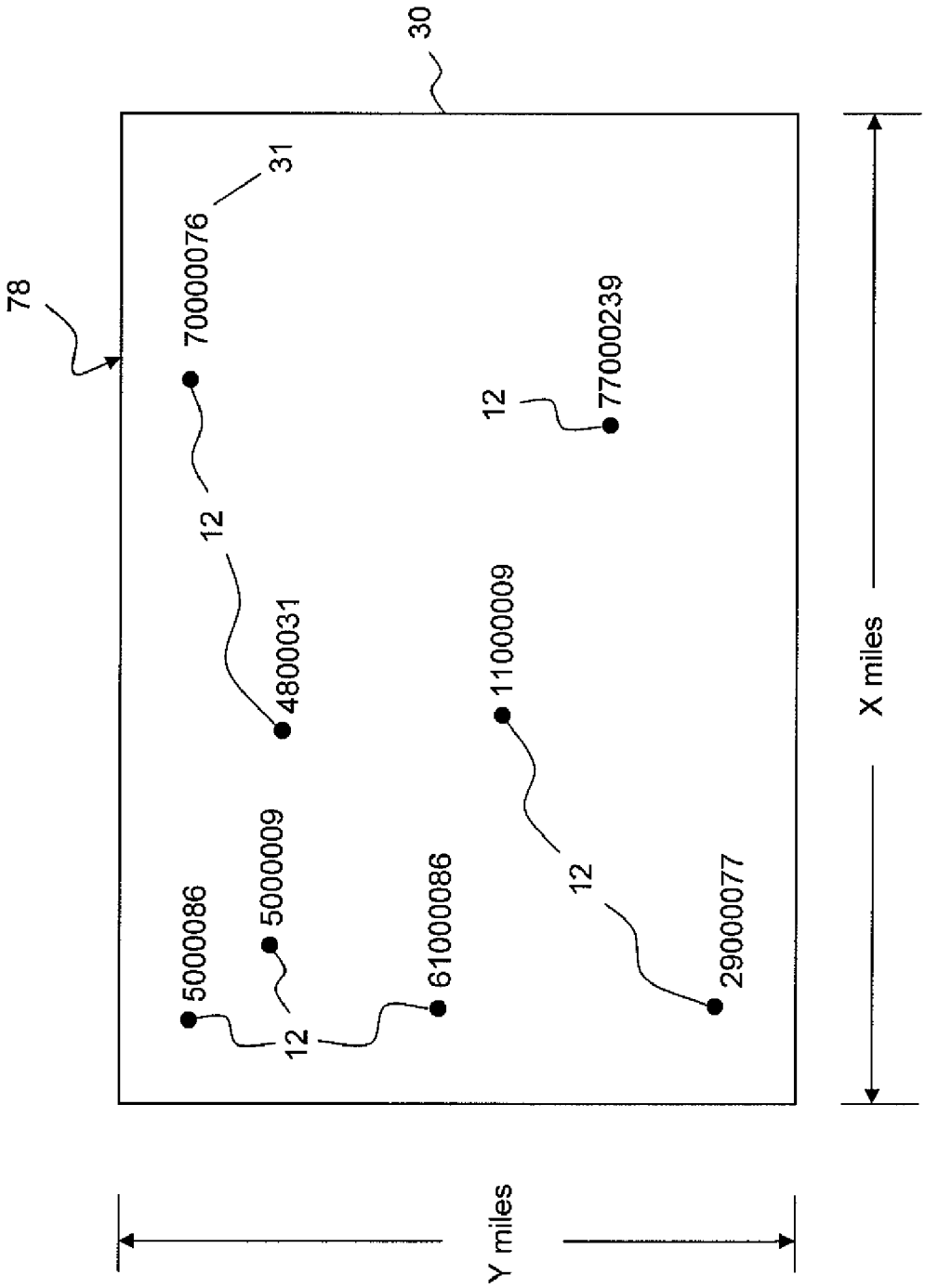
30
78
31
70000076
12
4800031
5000086
5000009
12
61000086
11000009
12
29000077
12
77000239
Y miles
X miles

FIG. 10

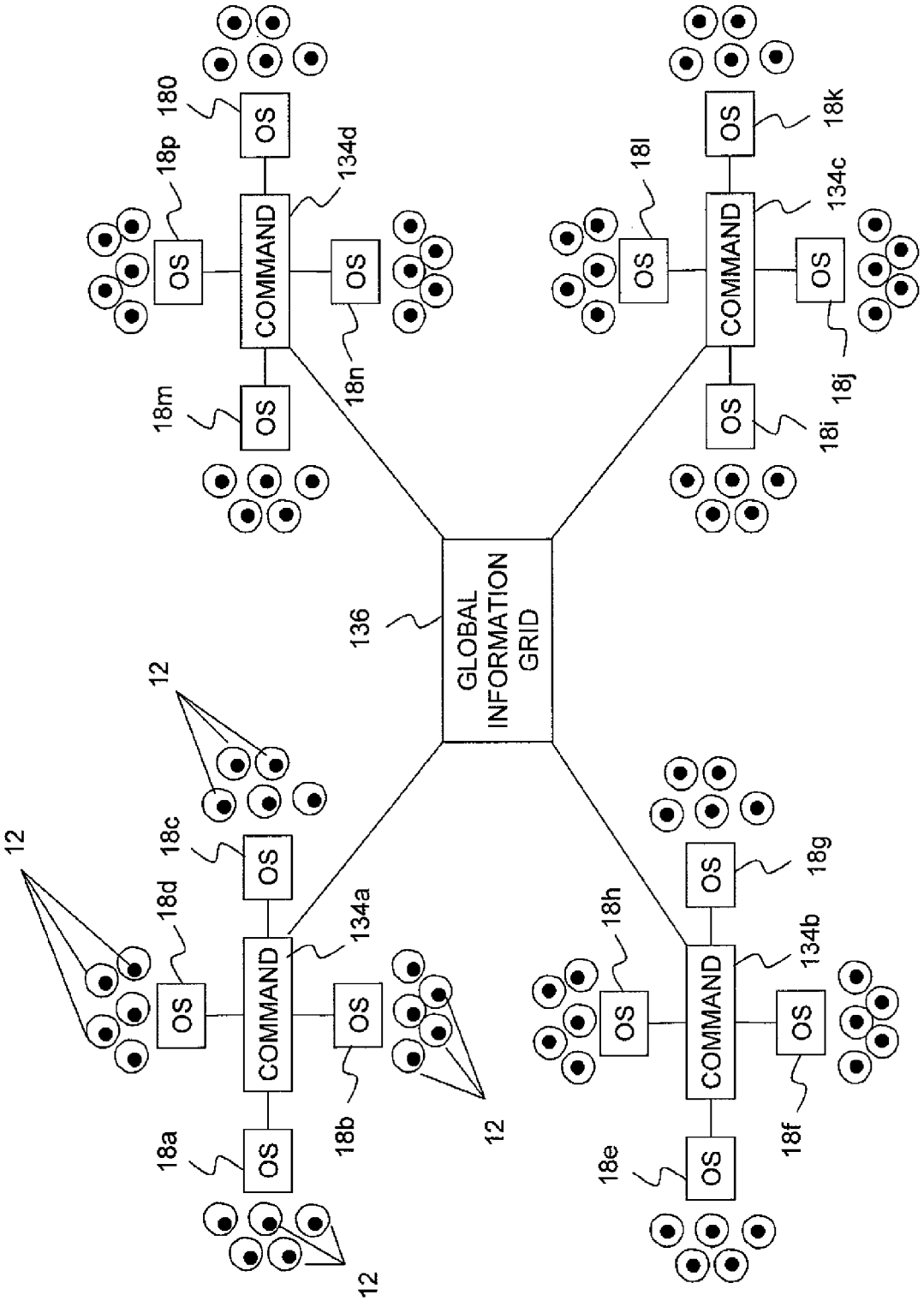
GLOBAL INFORMATION GRID
136
COMMAND
134a
134b
134c
134d
OS
18a
18b
18c
18d
18e
18f
18g
18h
18i
18j
18k
18l
18m
18n
18o
18p
12

FIG. 11

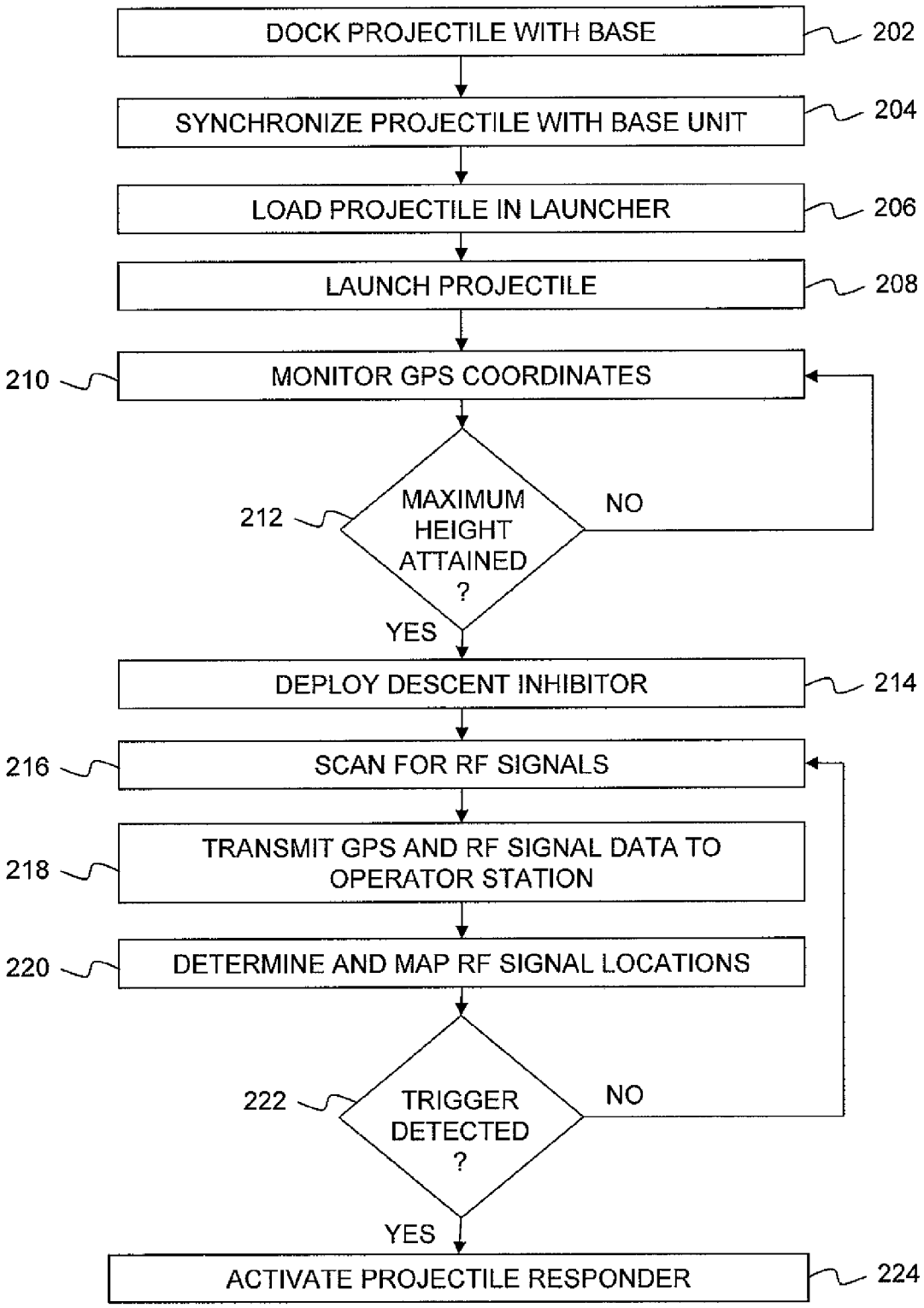
DOCK PROJECTILE WITH BASE
202
SYNCHRONIZE PROJECTILE WITH BASE UNIT
204
LOAD PROJECTILE IN LAUNCHER
206
LAUNCH PROJECTILE
208
210
MONITOR GPS COORDINATES
212
MAXIMUM HEIGHT ATTAINED ?
NO
YES
DEPLOY DESCENT INHIBITOR
214
216
SCAN FOR RF SIGNALS
218
TRANSMIT GPS AND RF SIGNAL DATA TO OPERATOR STATION
220
DETERMINE AND MAP RF SIGNAL LOCATIONS
222
TRIGGER DETECTED ?
NO
YES
ACTIVATE PROJECTILE RESPONDER
224

FIG. 12

SIGNAL TRANSMISSION SURVEILLANCE SYSTEM

STATEMENT REGARDING FEDERALLY SPONSORED RESEARCH OR DEVELOPMENT

Government Interest. The invention described herein may be manufactured, used and licensed by or for the United States Government.

BACKGROUND OF THE INVENTION

The present invention relates generally to a signal transmission surveillance system and, more particularly, to such a system including an electronic projectile launched over a geographic area for detecting radio frequency transmissions therewithin.

Systems are known for producing radio frequency maps, for example, through the use of a constellation of communication satellites. Illustrative objectives of such systems include providing for more efficient communications by reallocating user terminal radio frequency channels, eliminating the effects of undesirable signals from desirable user transmission signals, and reducing the power required by the user transmitter to effectively communicate. Such known satellite based systems illustratively use low Earth orbit satellites that communicate through one or more terrestrial gateways. As may be appreciated, these satellite based systems may have certain geo-spatial and time efficiency limitations depending upon the number and location of available satellites.

SUMMARY OF THE INVENTION

The present invention relates to a field deployable radio frequency surveillance system. More particularly, the system utilizes an electronic projectile launched from a hand-held launcher and configured to detect sources of radio frequency transmissions within a defined geographic area. Multiple electronic projectiles may be utilized to expand the desired geographic area of coverage.

According to an illustrative embodiment of the present disclosure, an apparatus for detecting signal transmissions includes an electronic projectile having a processor, a radio frequency detector operably coupled to the processor and configured to detect radio frequency transmission signals, and a transmitter operably coupled to the processor and configured to transmit a source signal including data about the detected radio frequency transmission signals. An operator station includes a receiver configured to receive the source signal, and a controller operably coupled to the receiver and configured to generate a radio frequency transmission map in response to the source signal. A display is operably coupled to the controller of the operator station and is configured to display the transmission map.

BRIEF DESCRIPTION OF THE DRAWINGS

The foregoing aspects and many of the attendant advantages of this invention will become more readily appreciated as the same become better understood by reference to the following detailed description when taken in conjunction with the accompanying drawings.

FIG. **1** is a perspective view showing an illustrative radio frequency transmission surveillance system of the present disclosure, with the electronic projectile launched from a hand held launcher and the descent inhibitor deployed;

FIG. **2** is a perspective view similar to FIG. **1**, showing a signal transmission detected by the electronic projectile, signals transmitted between the electronic projectile and the base station, and the location of the signal transmission determined by the base station;

FIG. **3** is a cross-sectional view in partial schematic of the electronic projectile of FIG. **1**;

FIG. **4** is a transverse cross-sectional view of the electronic projectile of FIG. **3**;

FIG. **5** is a block diagram showing the interaction of various illustrative elements with the processor of the electronic projectile of FIG. **1**;

FIG. **6** is a perspective view in partial schematic of the base station of the surveillance system of FIG. **1**;

FIG. **7** is a block diagram showing interaction of various illustrative elements with the controller of the base station of FIG. **6**;

FIG. **8** is a top plan view of an illustrative embodiment radio frequency transmission map generated by the surveillance system of FIG. **1**;

FIG. **9** is an illustrative view of a radio frequency transmission map displayed through the lenses of a pair of binoculars;

FIG. **10** is a diagrammatic representation of a geographic area under surveillance by a plurality of surveillance systems;

FIG. **11** is a diagrammatic view showing integration of the surveillance system of FIG. **1** with command nodes and a global information grid; and

FIG. **12** is a flow chart of an illustrative method of operation of the surveillance system of FIG. **1**.

Corresponding reference characters indicate corresponding parts throughout the several views. Although the drawings represent embodiments of various features and components according to the present disclosure, the drawings are not necessarily to scale and certain features may be exaggerated in order to better illustrate and explain the present disclosure. The exemplification set out herein illustrates embodiments of the invention, and such exemplifications are not to be construed as limiting the scope of the invention in any manner.

DETAILED DESCRIPTION OF THE DRAWINGS

For the purposes of promoting an understanding of the principles of the invention, reference will now be made to the embodiments illustrated in the drawings, which are described below. The embodiments disclosed below are not intended to be exhaustive or limit the invention to the precise form disclosed in the following detailed description. Rather, the embodiments are chosen and described so that others skilled in the art may utilize their teachings. It will be understood that no limitation of the scope of the invention is thereby intended. The invention includes any alterations and further modifications in the illustrated devices and described methods and further applications of the principles of the invention which would normally occur to one skilled in the art to which the invention relates.

Referring initially to FIGS. **1** and **2**, an illustrative embodiment radio frequency transmission surveillance system **10** is shown as including a deployable, illustratively an electronic projectile **12**. The electronic projectile **12** is configured to be launched in the air from a conventional hand-held projectile launcher **14** operated by a user **15**. As further detailed herein, a variety of different users **15**, such as a soldier, a rescue worker, or a telecommunications technician, may operate the surveillance system **10** depending upon its particular application.

The electronic projectile **12** illustratively has a caliber defined between 20 mm and 100 mm, and typically about 40

mm. As such, the electronic projectile **12** may be used in conventional projectile launcher **14**, such as the M203 grenade launcher or the MGL-140 multi-shot grenade launcher. More particularly, the projectile launcher **14** includes a launch tube **16** configured to receive and discharge the electronic projectile **12**. While a handheld launcher **14** is shown in FIG. **1**, other suitable launchers may also be used. For example, the launcher **14** may be ground supported. Alternatively, the user **15** may cause a balloon **52** (further detailed below) to deploy and inflate as the projectile **12** is positioned on, or at a certain predetermined elevation above (e.g., five feet), the ground. As further detailed herein, the electronic projectile **12** is in communication with a base or operator station **18**, through a physical connection when in a docked mode of operation and through a wireless connection when in a deployed mode of operation.

With reference to FIGS. **3** and **4**, the electronic projectile **12** illustratively includes a housing **20** including a cylindrical side wall **22** coupled to a base **23** and supporting a nose **24**. A conventional propellant **26** is received within the housing **20** and is configured to drive the projectile **12** in motion. More particularly, the propellant **26** is configured to launch the electronic projectile **12** from the launch tube **16** of the projectile launcher **14** into a given trajectory **28** above a monitored area **30** (FIG. **1**). When in this deployed mode of operation, the electronic projectile **12** is configured to detect RF signal sources **31** within the monitored area **30** (FIG. **2**).

With reference to FIGS. **3** and **5**, controller or processor **32** is received within the housing **20** and is operably coupled to a power source **34**, such as a battery. The processor **32** illustratively includes an internal clock **33** (FIG. **5**). A volatile or temporary memory (RAM) **35***a* is in communication with the processor **32** for storing mission sensitive information. As a security precaution, should the power source **34** fail, information stored within the volatile memory **35***a* will be lost and, as such, may not be retrieved. The volatile memory **35***a* illustratively includes projectile configuration details, such as desired surveillance modes (e.g., RF, video, audio, etc.), frequency surveillance details (e.g., bands for detection), and security protocols (e.g., encryption data and digital certificate data), which may be uploaded from the operator station **18**, as further detailed herein. A non-volatile or permanent memory **35***b* may also be in communication with the processor **32** for storing non-sensitive information. The non-volatile memory **35***b* may be preprogrammed with basic operating and communications software.

A shock absorber **36** is illustratively received within the housing **20** for protecting internal components, particularly electronics such as the processor **32**, from potentially damaging forces during launch and operation of the projectile **12**. The shock absorber **36** may comprise any conventional resilient device for absorbing forces, such as a steel coil spring, a gas shock absorber, or an elastomeric disc.

A location detector **40** is operably coupled to the processor **32** and is configured to detect the location of the projectile **12** and provide a location signal **42** indicative thereof to the processor **32**. In one illustrative embodiment, the location detector **40** comprises a global positioning system (GPS) receiver including an associated antenna **46**. It should be noted that in the illustrative embodiment, the GPS receiver may be part of the processor **32** or a separate component coupled thereto. As is known, the GPS receiver, through its antenna **46**, receives signals sent by a constellation of GPS satellites (not shown) orbiting the earth. Each satellite continually transmits signals including the time the signal was sent and the orbit for the satellite transmitting the signal. The processor **32** uses the arrival time of each signal to calculate the distance to each satellite, from which it determines the position of the electronic projectile **12**. More particularly, the processor **32** may determine x, y, and z coordinates (corresponding to latitude, longitude and altitude) of the electronic projectile **12** from the signals received by the location detector **40**.

The electronic projectile **12** further includes a descent inhibitor **50** operably coupled to the processor **32**. The descent inhibitor **50** is stored within the nose **24** of the housing **20** during a stored mode of operation and is deployed outside of the housing **20** during a surveillance mode of operation. The processor **32** illustratively controls deployment of the descent inhibitor **50**. In one illustrative embodiment, the descent inhibitor **50** comprises a balloon **52** in selective fluid communication with a gas supply **54**, illustratively a container containing lighter than air gas, such as helium or hydrogen. The processor **32** is operably coupled to a control valve **56** positioned intermediate the gas supply **54** and the balloon **52**. More particularly, the processor **32** is configured to open the control valve **56** for filling the balloon **52** from the gas supply **54**. In a further illustrative embodiment, the descent inhibitor **50** comprises a parachute (not shown) deployed by an explosive charge. In both illustrative embodiments, the descent inhibitor **50** opposes the force of gravity, thereby causing the electronic projectile **12** to hover or float above the monitored area **30** for an extended period of time (FIG. **1**).

In one illustrative embodiment, the processor **32** causes the descent inhibitor **50** to deploy when the projectile **12** has reached the maximum elevation or apex **58** of its trajectory **28**. Such maximum elevation **58** may be determined by the processor **32** in response to signals received by the location detector **40**. As detailed above, altitude is one of the coordinates (z coordinate) detected by the GPS receiver **44**. Alternatively, a separate altimeter (not shown) may be operably coupled to the processor **32** for detecting the maximum height of the electronic projectile **12**.

In certain illustrative embodiments, the electronic projectile may also include a trajectory control system (TCS). In one illustrative embodiment, the TCS is defined by the control valve **56** controlled by the processor **32**. More particularly, the control valve **56** may be a three position valve with a first position providing fluid communication between the gas supply **54** and the balloon **52** (i.e., supply position), a second position providing fluid communication between the balloon **52** and atmosphere (i.e., venting position), and a third position preventing fluid flow to and from the balloon **52** (i.e., closed position). For example, the control valve **56** may be placed in the venting position in response to a command signal received from the operator station **18** to allow the projectile to descend to the ground for retrieval. Additionally, the control valve **56** may be placed in the supply position by the processor **32** in order to release more gas into the balloon over time as gas particles escape through the pores of the balloon material over time in order to maintain a desired altitude over the observation area.

In another illustrative embodiment, the TCS may comprise a tether defined by spool of high tensile strength material (wire or plastic line) attached to the projectile housing **20** as it is launched from the launcher **14**. As the projectile **12** moves away from the launcher **14**, the wire will unravel from the spool thereby allowing the projectile **12** to reach a desired elevation without restriction. After the descent inhibitor **50** deploys, the user may secure the tether to the ground with an anchor or stake. The tether prevents the projectile **12** from floating out of the desired geographic area.

In yet another illustrative embodiment, the TCS may comprise a lift-generating device, such as a wing, suspended on a tether from the balloon **52**. More particularly, the wing generates a horizontal lift force that can be directed over a wide range of angles. This force, as transmitted to the balloon **52** by the tether, alters the balloon's path. An example of such a TCS is the StratoSail® System detailed by Global Aerospace Corporation of Altadena, Calif.

A surveillance device, illustratively a radio frequency (RF) detector **60** including an antenna **72***a* is operably coupled to the processor **32** and is configured to detect signals **62** transmitted by RF signal transmission sources **31** (FIG. **6**), including frequency and signal identification data. In different illustrative embodiments, the RF detector **60** may be part of the processor **32** or a separate component coupled thereto. The RF detector **60** provides detection signals **64** indicative of the detected signals **62** from radio frequency signal transmission sources **31** to the processor **32**. The detector **60** may include a tunable band filter (not shown) controlled by the processor **32** for detecting a variety of different RF bands. In a further illustrative embodiment, a band converter (not shown) may be used to convert the detected signal band frequency for subsequent signal processing and/or transmission.

Illustratively, the processor **32** cooperates with the internal clock **33** to timestamp the detected radio signal **62**. In other words, the processor **32** records the time the signal **62** was detected. The processor **32** may also cooperate with the internal clock **33** to record the duration of transmission of the signal **62**.

In one illustrative embodiment, the processor **32** is configured to detect the identification of the source **31** transmitting an RF signal **62**. For example, in the case of a cellular phone, the processor **32** is configured to detect the ESID (Electronic Security Identification), sometimes referred to as an ESN (electronic serial number), which is embedded within the phone by the manufacturer. As is known, each time a call is placed, the phone's identification is transmitted to a base station so that the wireless carrier can check the call's validity. In certain instances, the processor **32** will transmit a signal to query cellular phones **31** within the monitored area **30** thereby causing the cellular phones **31** to transmit their respective identifications (ESIDs or ESNs).

A transmitter, illustratively a transceiver **66** including an antenna **72***b* is operably coupled to the processor **32**. The processor **32** is configured to cause the transceiver **66** to send an RF source signal **68** to the operator station **18** (FIG. **6**). The source signal **68** includes information or data from the location signal **42** and the detection signal **64**. More particularly, the source signal **68** includes information or data on the location of the electronic projectile **12** and on the detected RF transmission signal sources **31**. In other words, the transceiver **66** sends RF source signal **68** to the operator station **18** with the information recently collected by the projectile **12** (including, for example, signal timestamp, signal duration, signal frequency, and signal thumbprint, and location of projectile housing **20** (e.g., GPS coordinates)).

The source signal **68** is illustratively encrypted through software within volatile memory **35***a* as described above. More particularly, the source signal **68** may be encrypted in accordance with Advanced Encryption Standard FIPS 140-2 in order to provide for integrity and confidentiality. Filtering, illustratively OSI Layer **2**, may also be used to allow only authorized nodes (i.e., receivers and/or transmitters) to communicate with the electronic projectile **12**. Digital certificates may be stored within volatile memory **35***a* and embedded within the source signals **68** to ensure signal authenticity upon receipt by the operator station **18**.

With further reference to FIGS. **3** and **4**, a plurality of antennas **72** extend axially within the housing **20** of the electronic projectile **12**. Illustratively, four antennas **72***a*, **72***b*, **72***c*, and **72***d* are shown, although the number and orientation of the antennas may vary based upon the particular applications of the electronic projectile **12**. As noted above, antenna **72***a* may be operably coupled to the RF detector **60** to receive RF signals within a desired band. For example, the antenna **72***a* and associated detector **60** may be configured to detect cellular phone signals, typically transmitted within the 1800 MHz and 1900 MHz frequency bands. Further illustratively, antenna **72***b* may be operably coupled to the transceiver **66** to send and receive signals from the operator station **18**. The remaining antennas **72***c* and **72***d* may be utilized for other application specific requirements. For example, antenna **72***c* may be used to receive RF transmission signals within the citizens band (CB), illustratively between 26.96 MHz and 27.41 MHz, while antenna **72***d* may be used to receive other RF transmission signals, such as those used by two-way radios (or walkie-talkies) or other commercial bands. In one illustrative embodiment, antenna **72***d* may be used for receiving and/or transmitting RF commercial transmissions on 2.4 GHz and/or 5.8 GHz bands. Antenna **72***d*, or additional antennae, may also be used to receive and/or transmit additional cellular phone transmissions on 800 MHz and/or 900 MHz bands. Alternatively, antenna may be used to jam or interfere with frequencies or send corrupted data to interrupt or jam signals from a specific frequency, as further detailed herein. A summary of illustrative uses of the antennas **72** are provided in the following table:

ANTENNA	COUPLING	FUNCTION
72a	RF Receiver	Receive cellular phone signals (1800 MHz and 1900 MHz bands)
72b	RF Transmitter	Transmit signals to base station
72c	RF Receiver	Receive CB radio signals (26.96 MHz-27.41 MHz)
72d	Application Specific (illustrative RF Receiver or Transmitter)	Receive/Transmit RF Signals on various bands (e.g. RF commercial 2.4 GHz and 5.8 GHz bands, cellular phone 800 MHz and 900 MHz bands)

As shown in FIGS. **3** and **5**, the housing **20** of the electronic projectile **12** may include a number of surveillance devices **74** in addition to the RF detector **60**. Such surveillance devices **74** may include a camera **74***a* and/or an audio receiver or microphone **74***b*. Illustratively, the camera **74***a* may be a video camera, a night vision camera, and/or an infrared (IR)

camera. The surveillance devices **74** are in communication with the processor **32** such that information may be processed and transmitted by the transceiver **66**. More particularly, video and/or audio feeds may be streamed to the operator station **18** within the source signal **68**. The video and/or audio feeds may also be stored within the volatile memory **35***a* or permanent memory **35***b* of the electronic projectile **12** for subsequent download and evaluation by advance teams prior to others entering the monitored area **30**. As noted herein, only authorized nodes will be able to receive the source signal **68** through the use of security elements, such as encryption, filtering, and digital certificates.

With further reference to FIGS. **3** and **5**, the electronic projectile **12** may further include one or more responders **76** controlled by the processor **32**. In one illustrative embodiment, the responder comprises a destructive or anti-tamper device **76***a*, illustratively an incendiary device or an explosive, that may be detonated by the processor **32** in response to a predefined stimuli or trigger event. For example, if the location detector **40** senses an uncontrolled descent of the electronic projectile **12**, the processor **32** may detonate the destructive device **76***a* to prevent unauthorized access to the components of the electronic projectile **12**.

In a further illustrative embodiment, the responder **76** comprises an RF jamming device **76***b* configured to disrupt RF communications at a certain frequency within the monitored area **30**. More particularly, the RF jamming device **76***b* may comprise an RF transmitter coupled to the processor **32** and tuned to the same frequency as the RF signal source **31** of interest and with the same type of modulation to interfere with, suppress, or disrupt any signal **62** at the RF signal source **31**. In one illustrative embodiment, antennae **72***d* may be used to jam frequencies or send corrupt data. Illustratively, scrambled signals or irregularities in the modulation may be used to interfere with or jam signals from a specific frequency (for example jamming a 2.4 GHz signal coming from a transmitter by sending corrupted data on the same frequency to confuse the associated receiver). Illustratively, the RF jamming device **76***b* may be directed to certain cellular phones with ESIDs or ESNs previously identified by the processor **32**. In other embodiments, identification of certain suspect ESIDs or ESNs themselves may be the trigger event causing activation of the responder **76** by the processor **32**.

Referring now to FIGS. **6** and **7**, the operator station **18** illustratively includes an RF detector **75** including an antenna **77** configured to detect signals **62** transmitted by RF signal transmission sources **31**. The RF detector **75** may function in a manner similar to the RF detector **60** of the projectile **12**. More particularly, the RF detector **75** provides detection signals **79** indicative of the detected signals **62** transmitted by the RF signal transmission sources **31**, including frequency and signal identification data. The illustrative operator station **18** further includes a projectile transceiver **80** having an antenna **82** for providing communication with the electronic projectile **12**. As such, the transceiver **80** is configured to receive the source signal **68** from the electronic projectile **12**. Similarly, the transceiver **80** is configured to transmit a control signal **81** to the electronic projectile **12**. It should be appreciated that the frequency used for transmitting signals **68** and **81** between the projectile **12** and the operator station **18** should be different from the frequencies monitored by RF detectors **60** and **75** or jammed by the jamming device **76***b*.

A controller **84** is operably coupled to the RF detector **75** and to the transceiver **80**. More particularly, the controller **84** processes information or data received from within the detection signal **79** from the RF detector **75** and the source signal **68** as transmitted by the electronic projectile **12**. The controller **84** illustratively includes a master clock **85**. The controller **84** cooperates with the master clock **85** to timestamp and record duration of signals **62** detected by the RF detector **75**.

A user input **86**, such as a keyboard **88**, and a user output **90**, such as a display screen **92** are in communication with the controller **84**. A location detector **94**, illustratively a GPS receiver including an antenna **98**, are coupled to the controller **84**. As further detailed herein, since the controller **84** includes absolute location information of the electronic projectile **12** (from the location detector **40**) and the operator station **18** (from the location detector **94**), it can determine the distance separating the projectile **12** and the operator station **18**. The controller **84** then compares the thumbprints for detected signal(s) **62**, from data within detection signal **79** and source signal **68**, to determine that the signal(s) **62** are from the same RF signal source **31**. Once the signal(s) **62** have been identified, the location data of the projectile **12** and the operator station **18**, together with the signal time stamps are used to calculate through triangulation the absolute location or coordinates of the RF transmission source **31** (FIG. **2**).

The controller **84** may include a memory **100** storing operating software **102**, such as data collection software configured to cause the controller **84** to aggregate data from and assign data points to various RF transmission sources **31**. The information aggregated by the controller of the operator station **18** may be output in a variety of manners. In one illustrative embodiment, mapping software **104** may also be stored in the memory **100** and used to position the identified RF signal transmission sources on a graphic representation or map **106** (FIG. **8**).

With reference to FIG. **8**, the map **106** may be viewed by the user **15** on a user output **90**, such as display screen **92** coupled to the controller **84**. More particularly, the illustrative map **106** provides an aerial view of the monitored area **30** with the detected RF signal sources **31** identified by an indicia or symbol. Details of each signal source **31**, such as transmission frequency, duration, and/or ESID or ESN, may be called up to the screen **92** by clicking on the symbol representing the signal source **31**.

In a further illustrative embodiment, the user output **90** may include binoculars **110** (FIG. **9**) including a display screen **112** having an electronic overlay **114** that may display location data of signal sources **31** received from the controller **84** via a wireless network signal transmitted by an output receiver, illustratively the transceiver **80**. Illustratively, the binoculars **110** may comprise electronic distance ranging binoculars including an electronic compass and a distance ranging device (not shown). As noted above the binoculars **110** illustratively receives data processed by the operator station **18** via a wireless network signal. More particularly, the binoculars **110** include a processor in communication with the display screen **112** and a location detector, illustratively a GPS receiver (not shown). The processor of the binoculars **110** determines the location of the binoculars **110** and generates the image shown on the screen **112** through a variety of data sources. Such data sources may include the GPS receiver, the compass, the ranging device, and the operator station **18** to provide the overlay **114** on the screen **112**.

As detailed herein, the projectile **12** and the operator station **18** are illustratively configured to detect RF signals **62**. The controller **84** of the operator station **18** may be further configured to generate control signal **81** in response to a trigger or stimulus. More particularly, the controller **84** is looking for predefined trigger events. These predefined trigger events may be stored in memory **100** in a mission specific threat library. If a trigger match is found, the controller **84** causes the transceiver **80** to transmit the control signal **81** to

the transceiver **66** of the electronic projectile **12**. The processor **32** of the electronic projectile **12** may respond in a number of ways in response to the control signal **81** sent in response to the trigger event. For example, the processor **32** may take no action, or may activate responder **76** upon receiving proper instructions from the control signal **81**. As detailed above, the responder **76** may include a number of active elements, including a destructive device and/or an RF jamming device. Alternatively, the processor **32** could cause activation of one or more of the surveillance devices **74** (such as camera **74***a* and/or audio receiver or microphone **74***b*) and/or an alarm.

The operator station **18** further includes a docking station **120** operably coupled to the controller **84**. The docking station **120** illustratively includes a base **122** supporting a cylindrical housing or receiver **124** for receiving the electronic projectile **12**. The receiver **124** includes electrical connectors **126**, illustratively annular contact rings, for contacting mating electrical contacts or connectors **128** supported by the side wall **22** of the projectile **12**. In one illustrative embodiment, four separate connectors are provided for mating with the projectile **12**, in a similar fashion as a universal serial bus (USB). Illustratively, two of the connectors may be used for data communication with the processor **32**, and the remaining two connectors may be used for charging the battery **34**. A printed circuit board **130** is supported by the base **122** and couples the connectors **126** with the controller **84**.

The operator station **18** is configured to negotiate with the projectile **12**. Cryptographic keys are used to make sure the operator station **18** is valid and that the projectile **12** is valid. In other words, the operator station **18** and the projectile **12** may communicate only if their respective cryptographic keys are valid. Encryption may be used to encrypt data at rest when the projectile **12** is not being used.

The operator station **18** may communicate with the projectile **12** to facilitate a variety of services. For example, the operator station **18** may download audio and video stored in the projectile **12**. The operator station **18** may also probe the projectile's memory **35** to determine if trigger events or stimuli have been discovered while the projectile **12** was operating in a "scarecrow" mode. The scarecrow mode is defined when the operator station **18** directs the projectile **12** to move over a geographic area and record audio, video, and/or RF signals. If the projectile **12** loses communication with the operator station **18**, its function will not be affected. When the scarecrow mode is enabled, the projectile's processor **32** is instructed to deploy the destructive device **76***a* if a detected altitude is too low or if the location detector **40** detects that the projectile **12** is outside of its operational range.

With reference to FIG. **10**, multiple electronic projectiles **12** may be deployed to expand the effective monitored area **30** and create a coverage net **78**. The coverage net **78** may be used to not only expand the monitored area **30**, but may also be used to facilitate communication between multiple electronic projectiles **12** thereby providing relay communications in geographically challenging environments (e.g., mountains, tall buildings, etc.).

A plurality of different electronic projectiles **12** are shown in FIG. **10** to provide coverage net **78** over expanded monitored area **30** of approximately X miles by Y miles. The monitored area **30** may be expanded or contracted by deploying more or fewer electronic projectiles **12**, respectively. Each operator station **18** has a unique identification number assigned to it. Similarly, each electronic projectile **12** has a unique identification number assigned to it and stored within its memory **35***b*. For example, the nineteenth projectile **12** launched from the operator station **18** identified as unit fifty is identified as projectile number 5000019, while the eighty-sixth projectile **12** launched from the same operator station **18** is identified as projectile number 5000086. Similarly, the two-hundred thirty-ninth projectile **12** launched from operator station number seventy-seven is identified as 77000239.

With reference to FIG. **11**, the controller **84** may also include communication software **108** to facilitate communication between the operator station **18** and one or more electronic projectiles **12** and/or one or more central command stations **134**. More particularly, the controller **84** of each operator station **18** may send and receive data to and from one of the command stations **134***a*, **134***b*, **134***c*, **134***d*. The command stations **134***a*, **134***b*, **134***c*, **134***d* may each be in active communication with a network **136**, such as the global information grid (GIG) or worldwide web, through output transceiver, illustratively a two-way tactile radio **116**. More particularly, the tactical radio **116** may be used for communicating with a C2 (Command and Control) platform, a C4I (Command, Control, Communications, Computers, and Intelligence) platform, or some other secure network **136** to upload and download information for intelligence gathering and/or sharing.

With reference to FIG. **12**, during operation of the surveillance system **10**, a user **15** initially docks the electronic projectile **12** with the docking station **120** of the operator station **18**, as shown in block **202**. More particularly, the housing of the electronic projectile **12** is received within the receiver of the docking station **120** such that the electrical connectors **126** and **128** provide communication between the processor **32** of the projectile **12** and the controller **84** of the operator station **18**. At block **204**, the projectile **12** is synchronized with the operator station **18**. For example, software and mission specific data (e.g. audio/video download, projectile memory download, cryptographic key exchange, firmware update, threat library, control data, etc.) is uploaded from the operator station **18** to the memory **35***a*, **35***b* of the projectile **12**. Data may also be downloaded from the memory **35***a*, **35***b* of the projectile **12** to the operator station **18**, for example, at the end of a mission. Such downloaded data may be used to create new or update existing threat libraries.

During this synchronization step, time is synchronized between the clock **33** of the projectile **12** and the master clock **85** of the operator station **18**. More particularly, the processor **32** of the projectile **12** and the controller **84** of the operator station **18** determine the difference in time between the clocks **33** and **85** and assign this time difference value a variable in the memory **100** of the operator station **18**, based upon the assigned projectile **12** (for example, projectile serial number in case the operator station **18** is monitoring multiple projectiles **12**). Synchronizing or accounting for time differentials between the clocks **33** and **85** of the projectile **12** and the operator station **18**, permits the respective processor **32** and controller **84** to determine how long a specific signal **62** takes to reach each location. This information is needed to calculate and triangulate distances to the transmission source based on signal communication times, and thereby determine the transmission source **31** location.

Next, the projectile **12** is undocked from the operator station **18** and loaded into the projectile launcher **14** at block **206**. The user **15** at block **208** then launches the electronic projectile **12** from the launcher **14**. The electronic projectile **12** travels along trajectory **28** away from the launcher **14**. At block **210**, the location detector **40** monitors GPS coordinates. Upon reaching maximum elevation **58** as detected by the location detector **40** and determined by processor **32** at block **212**, the processor **32** deploys the descent inhibitor **50** at block **214**. More particularly, the processor **32** opens the

control valve **56** thereby filling the balloon **52** with gas from the gas supply **54**. At this point, the electronic projectile **12** hovers above the geographic area **30** to be monitored.

The radio frequency detector **60** of the electronic projectile **12** scans the area for RF signal sources **31** at block **216**. Upon detecting RF signals, the processor **32** uses the clock **33** to timestamp the signal **62** and record signal duration. The processor **32** also may record the signal **62** thumbprint (unique identification). Finally, the processor **32** attaches the location determined by the location detector **40** (illustratively GPS coordinates) of the projectile **12** at the time the signal **62** was received. As detailed above, additional monitoring may be conducted by other surveillance devices, such as a video camera and/or an audio receiver, which provides video and/or audio data to the processor **32**. The source signal **68**, including data on absolute location of projectile **12**, timestamp of transmitted RF signals, frequency of RF signal sources **31**, and duration of transmitted RF signals, is then transmitted at block **218** by the transceiver **66** to the controller **84** of the operator station **18**. In instances where cell phone signal sources **31** are identified, cell phone identification numbers (ESID or ESN) may also be included in the source signal **68**. Additional surveillance data, such as video and/or audio data may also be transmitted in source signal **68**.

The transceiver **80** of the operator station **18** receives the source signal **68** from projectile **12**. The controller **84** utilizes the security devices, such as encryption digital certificates, and/or filtering, to verify the authenticity of the source signal **68**. The operator station **18** receives the same signal **62** from the signal source **31** and records the same data as the projectile **12**, including receipt time of the signal **62** and signal duration. The absolute locations of both the projectile **12** and the operator station **18** are then used to determine the distance separating the projectile **12** and the operator station **18**. The controller **84** of the operator station **18** compares the thumbprint from the signal(s) **62** detected at both the projectile **12** and the operator station **18**, and determines whether the signal (s) **62** is the same. Once the signal(s) has been determined to be the same, the location coordinates and time delays from the projectile **12** and the operator station **18** are computed by the controller **84** to give a triangulation position of, and intercept vector to, the signal source **31**. In other words, the controller **84** triangulates the signal source **31** and then assigns it a data point and a geospatial location at block **220**.

Once data points are collected for all of the known signal sources **31**, the controller **84** of the operator station **18** may relay the data back to a command unit or to the global information grid for command decision and/or information gathering. Data may also be relayed to various user outputs, such as the electronic binoculars **110** or display screen **92**, for mapping relative to the location of the operator station **18**. The binoculars **110** may be used to find the target visually, where it can be flagged as threat or benign from visual prompts on overlay **114** of the binoculars **110**. The user **15** may visually identify targets on the overlay **114**, whereby the user **15**, or others having access to the data through operator station **18**, command station, or global information grid, may scroll through targets and identify as friend or foe.

As shown at block **222**, upon detecting an appropriate stimulus or trigger event, the controller **84** will match the detected trigger event to a corresponding predefined trigger event stored in the threat library. At this point the controller **84** will caused the transceiver **80** to transmit a signal back to the processor **32** of the electronic projectile **12** to activate at least one responder **76**. The stimulus or trigger event may illustratively comprise any one of a frequency location, a frequency movement, and a frequency duration. The stimulus or trigger event may also comprise a particular cellular phone of interest as identified through its ESID or ESN. In one illustrative embodiment, the responder **76** comprises a jamming signal which is transmitted at block **224** by the electronic projectile **12**. In a further illustrative embodiment, the responder **76** comprises an explosive which is detonated in response to the signal from the operator station **18**.

As may be appreciated, the illustrative radio frequency transmission surveillance system **10** as detailed herein may be used in a wide variety of environments for numerous different purposes. In military applications, the system **10** may provide RF mapping of hostile areas in order to locate enemy combatants and/or improvised explosive devices (IEDs) with RF triggers. The system **10** may also provide video and audio surveillance or reconnaissance for military, law enforcement, and/or search and rescue users. As detailed above, the system **10** may also provide for smart RF jamming in order to prevent undesirable RF communications. In communications applications, the plurality of projectiles **12** may be useful in providing communication relays in difficult environments, such as mountainous regions. The system **10** may be integrated into a global information grid thereby providing the mapping of RF signals, including cellular phone ESIDs. In all applications, live encrypted data feeds may be provided from the projectile **12** to various operator stations **18** on the ground.

While this invention has been described as having an exemplary design, the present invention may be further modified within the spirit and scope of this disclosure. This application is therefore intended to cover any variations, uses, or adaptations of the invention using its general principles. Further, this application is intended to cover such departures from the present disclosure as come within known or customary practice in the art to which this invention pertains.

The invention claimed is:

1. An electronic projectile comprising:

a housing;

a processor received within the housing;

a power source operably coupled to the processor;

a location detector operably coupled to the processor, the location detector configured to detect the location of the housing and provide a location signal including location data of the housing to the processor;

a descent inhibitor adapted to maintain an altitude or position relative to a ground reference for a predetermined period operably coupled to the processor, the descent inhibitor configured to be stored in the housing during a first mode of operation and to be deployed during a second mode of operation, the processor controlling deployment of the descent inhibitor;

a radio frequency detector operably coupled to the processor, the radio frequency detector configured to scan and detect a radio frequency transmission signal based on signals from said processor and provide a detection signal including data on the radio frequency transmission signal to the processor, wherein said processor further stores a plurality of time stamp data associated with a respective plurality of said detected radio frequency transmission signal;

a transmitter operably coupled to the processor, the processor configured to cause the transmitter to send a plurality of source signals to an operator station, the source signal including the location data of the housing, at least one said time stamp associated with said location data, and the data on the radio frequency transmission signal, wherein said data on the radio frequency signal comprises at least one signal characteristic;

a receiver operably coupled to the processor and configured to receive a control signal from the operator station, the control signal based upon a trigger determined by the operator station, and the processor activating a responder in response to the control signal;

a plurality of antennas operably coupled to the radio frequency detector, each of the plurality of antennas tuned to a different frequency range; and

wherein said processor, said transmitter, and said receiver send a signal to query a plurality of communication devices within a predetermined range of said projectile, wherein said query triggers said communication devices to transmit a unique identification data code associated with each of said communication devices;

wherein said processor appends said unique identification data code to said queried signal data.

2. The electronic projectile of claim **1**, further comprising a propellant configured to drive the housing in motion.

3. The electronic projectile of claim **1**, further comprising a shock absorber operably coupled to the processor.

4. The electronic projectile of claim **1**, further comprising a data port supported by the housing and in communication with the processor, the data port configured to electrically couple to a connector supported by a docking station of the operator station.

5. The electronic projectile of claim **1**, further comprising at least one of a camera configured to transmit an image to the processor, and an audio receiver configured to transmit an audio signal to the processor.

6. The electronic projectile of claim **1**, further comprising a destructive member received within the housing, detonation of the destructive member being controlled by the processor.

7. The electronic projectile of claim **6**, wherein the destructive member comprises at least one of an explosive and an incendiary device.

8. The electronic projectile of claim **1**, wherein the descent inhibitor comprises one of a balloon or a parachute deployed by the processor when said processor determines a predetermined elevation is detected based on at least one said location data.

9. The electronic projectile of claim **8**, wherein the predetermined elevation is the apex of the trajectory of the projectile.

10. The electronic projectile of claim **1**, wherein the location detector includes a global positioning satellite receiver and antenna.

11. The electronic projectile of claim **1**, wherein the transmitter is defined by a transceiver received within the housing.

* * * * *