US007811132B2

(12) **United States Patent**
Carpenter et al.

(10) **Patent No.: US 7,811,132 B2**
(45) **Date of Patent: Oct. 12, 2010**

(54) **ELECTROMAGNETIC INTERFERENCE PROTECTIVE BACKSHELLS FOR CABLES**

(75) Inventors: **Bruce M. Carpenter**, Bloomington, IN (US); **William J. Fegan**, Loogootee, IN (US)

(73) Assignee: **The United States of America as represented by the Secretary of the Navy**, Washington, DC (US)

(*) Notice: Subject to any disclaimer, the term of this patent is extended or adjusted under 35 U.S.C. 154(b) by 0 days.

(21) Appl. No.: **12/469,074**

(22) Filed: **May 20, 2009**

(65) **Prior Publication Data**

US 2010/0184327 A1 Jul. 22, 2010

Related U.S. Application Data

(60) Provisional application No. 61/145,399, filed on Jan. 16, 2009.

(51) **Int. Cl.**
H01R 13/648 (2006.01)

(52) **U.S. Cl.** **439/607.41**

(58) **Field of Classification Search** 439/607.41, 439/607.47, 607.45, 607.46, 607.49, 607.05, 439/607.3
See application file for complete search history.

(56) **References Cited**

U.S. PATENT DOCUMENTS

3,535,676	A	10/1970	Schultz, Sr.	
4,444,453	A	4/1984	Kirby et al.	
4,457,576	A *	7/1984	Cosmos et al.	439/607.47
4,613,198	A	9/1986	Selvin et al.	
4,661,888	A *	4/1987	Jewell et al.	361/818
4,822,286	A *	4/1989	Bianca	439/607.45
4,963,104	A *	10/1990	Dickie	439/460
5,123,860	A	6/1992	Kamei et al.	
5,181,863	A	1/1993	Welsh	
5,295,868	A	3/1994	Viaud et al.	
5,342,203	A	8/1994	Perretta et al.	
5,401,177	A	3/1995	Dutton et al.	
5,468,161	A	11/1995	Wright	
5,508,475	A	4/1996	Profiri et al.	
5,540,602	A	7/1996	Bell	
5,975,953	A	11/1999	Peterson	
6,116,955	A	9/2000	Lazaro, Jr.	
6,155,867	A	12/2000	Chou	
6,280,257	B1	8/2001	North et al.	
6,406,329	B1	6/2002	Lazaro, Jr.	
6,576,833	B2 *	6/2003	Covaro et al.	174/359
6,616,480	B2	9/2003	Kameyama	
7,124,505	B2	10/2006	Friesen et al.	
2007/0021006	A1	1/2007	Kawamura et al.	
2008/0113559	A1	5/2008	Hamai et al.	

OTHER PUBLICATIONS

A2P4 Electrical Shield, Naval Air Systems Command, circa 1994, 4 pgs.

* cited by examiner

Primary Examiner—Phuong K Dinh
(74) *Attorney, Agent, or Firm*—Christopher A. Monsey

(57) **ABSTRACT**

A backshell for providing electromagnetic interference shielding between a shielded cable and an electrical connector. The backshell includes a housing defined by a first housing member coupled to a second housing member by a releasable coupler.

25 Claims, 9 Drawing Sheets

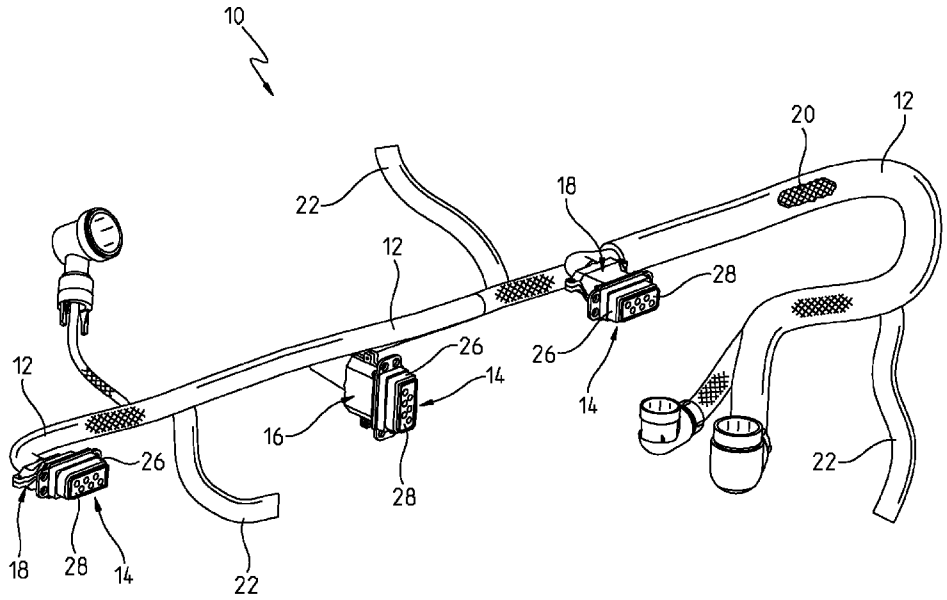

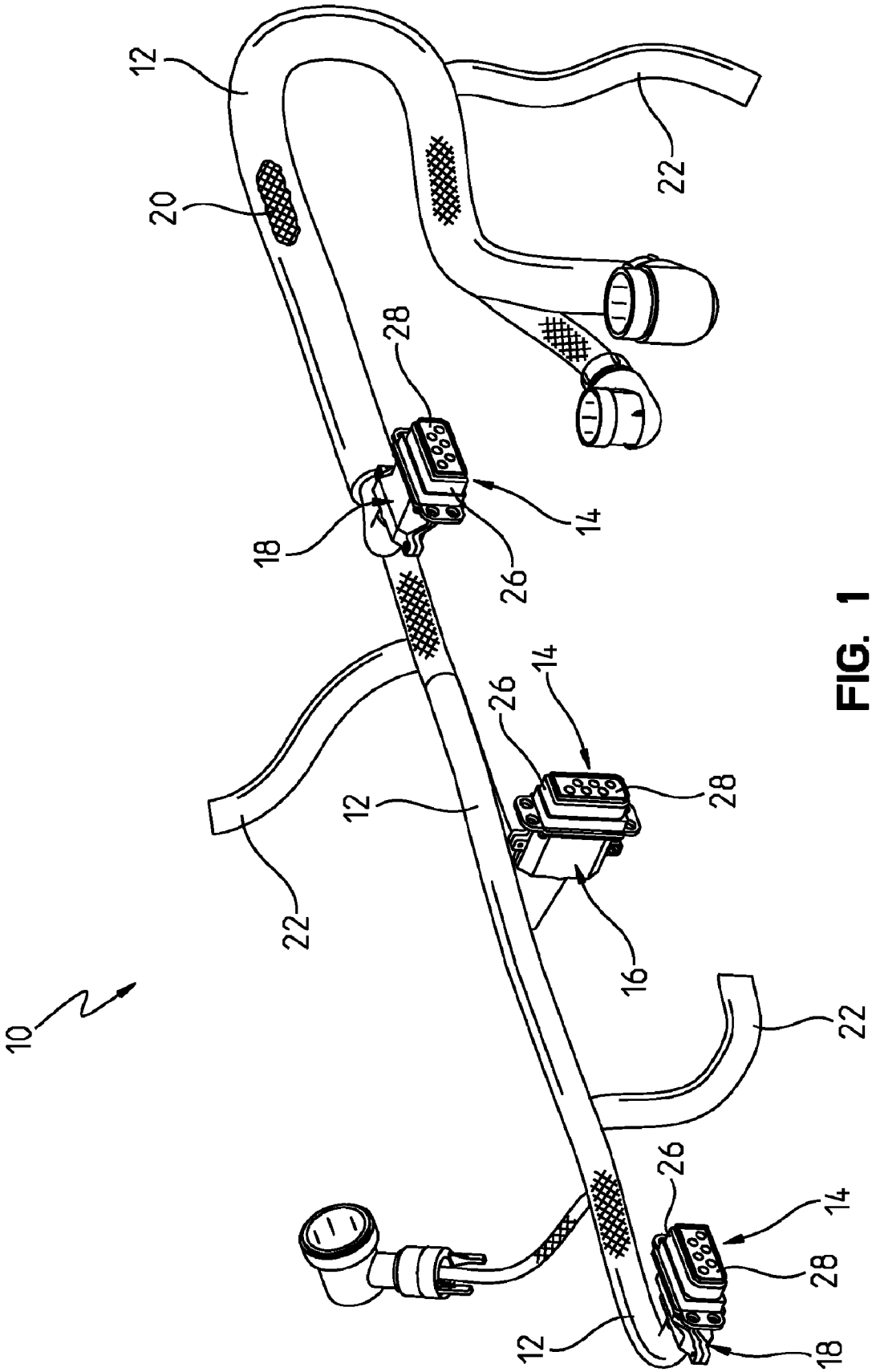

FIG. 1

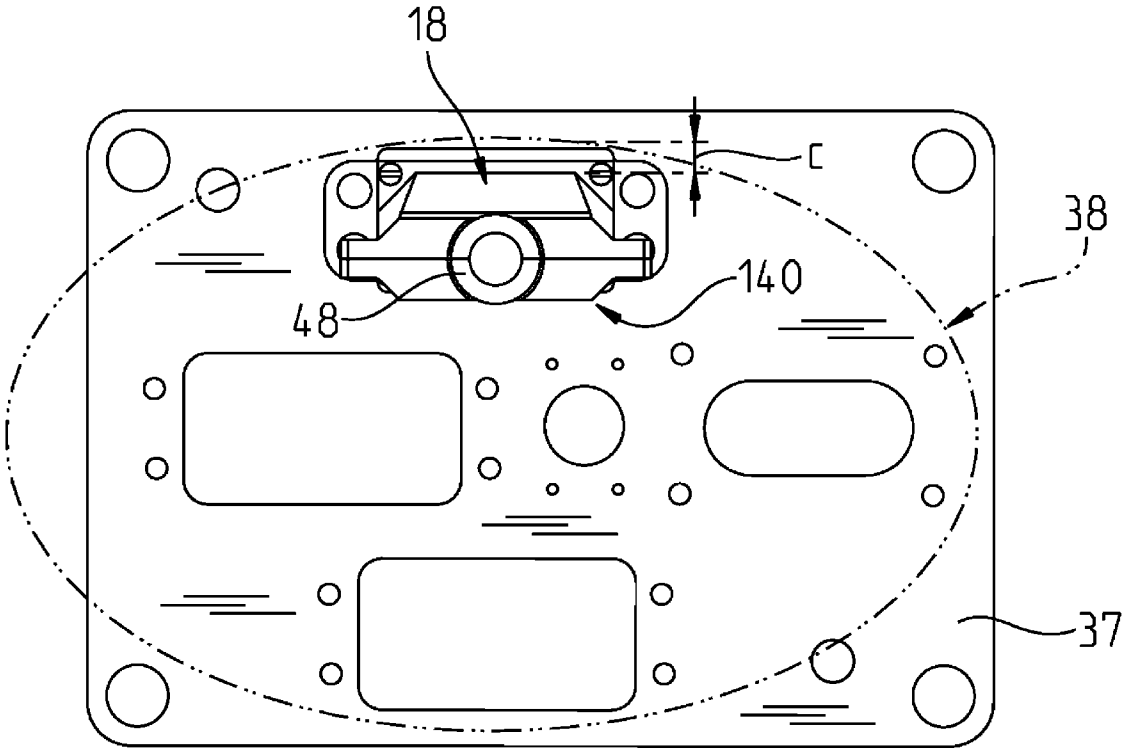

FIG. 2

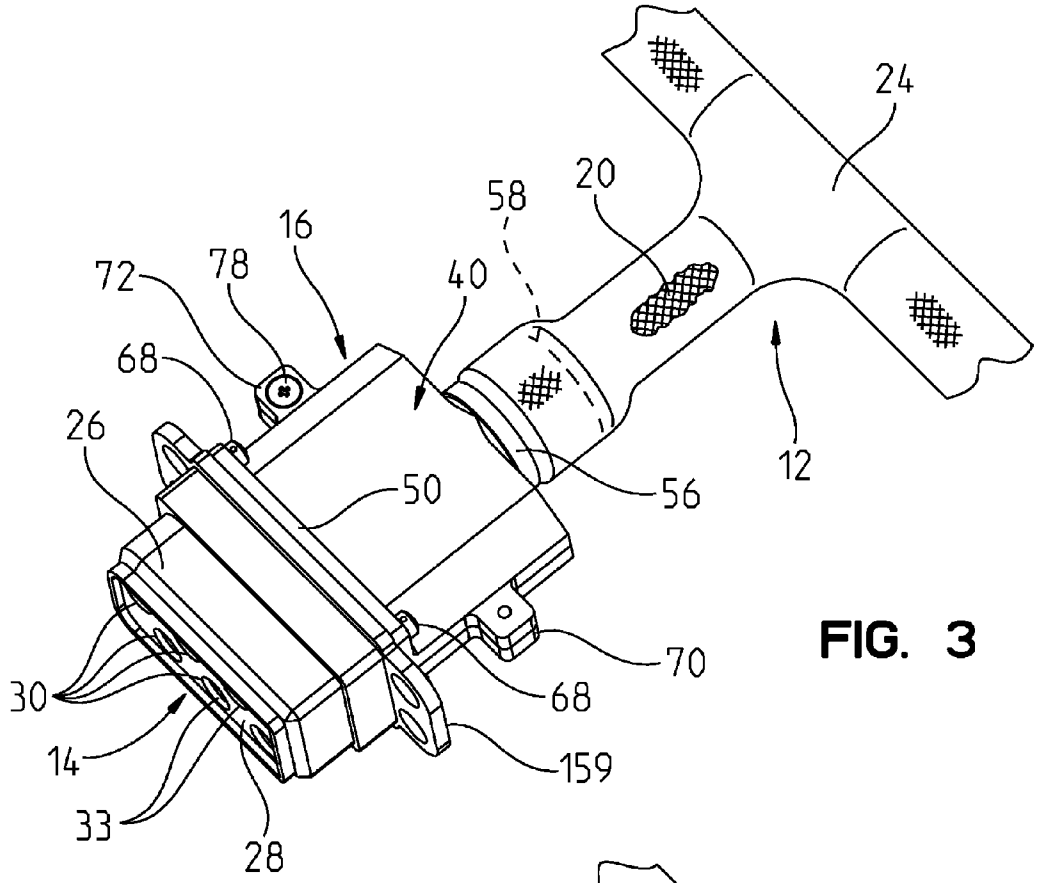
24
20
58
16
78
72
40
68
26
50
56
12
70
68
30
14
159
33
28

FIG. 3

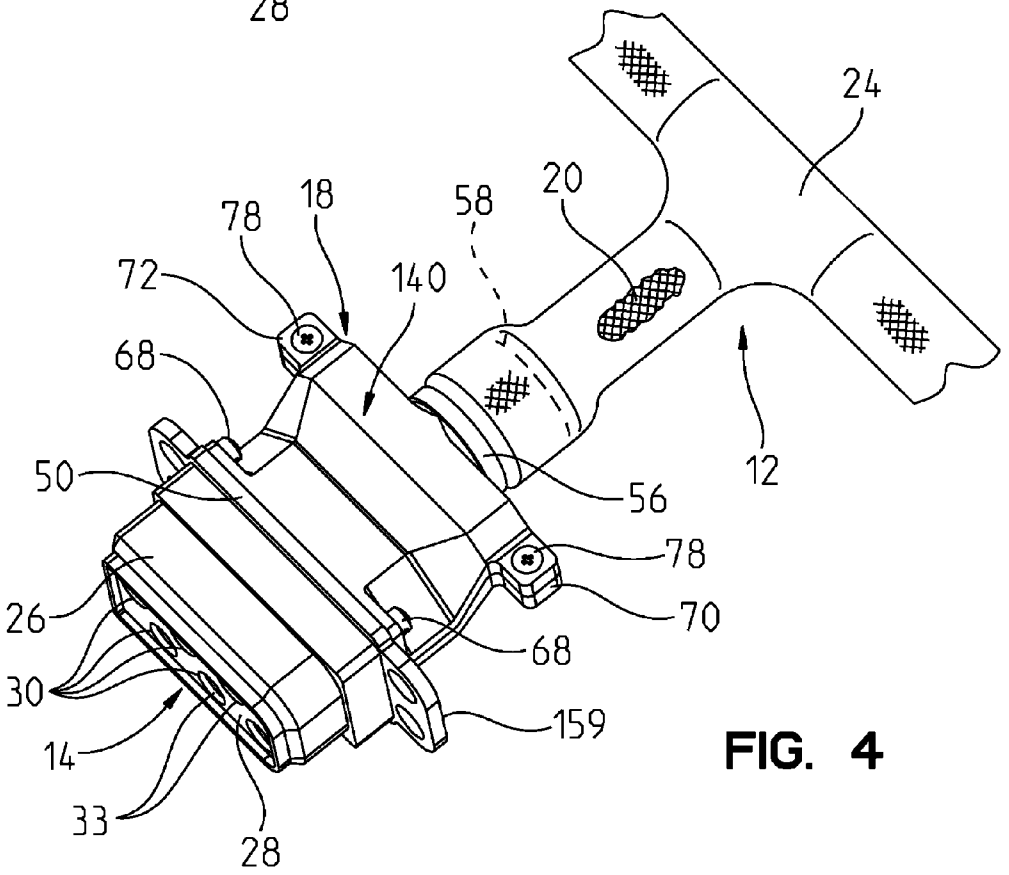
24
20
58
18
78
72
140
68
50
56
12
78
70
26
68
30
159
14
33
28

FIG. 4

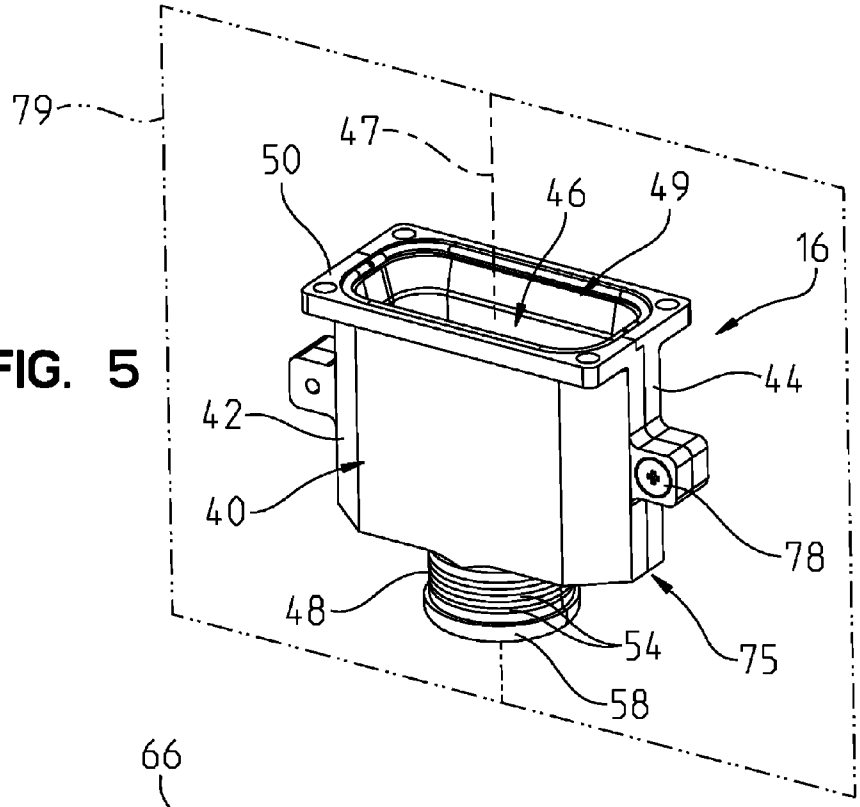
79
47
50
46
49
16
44
42
40
78
48
54
75
58

FIG. 5

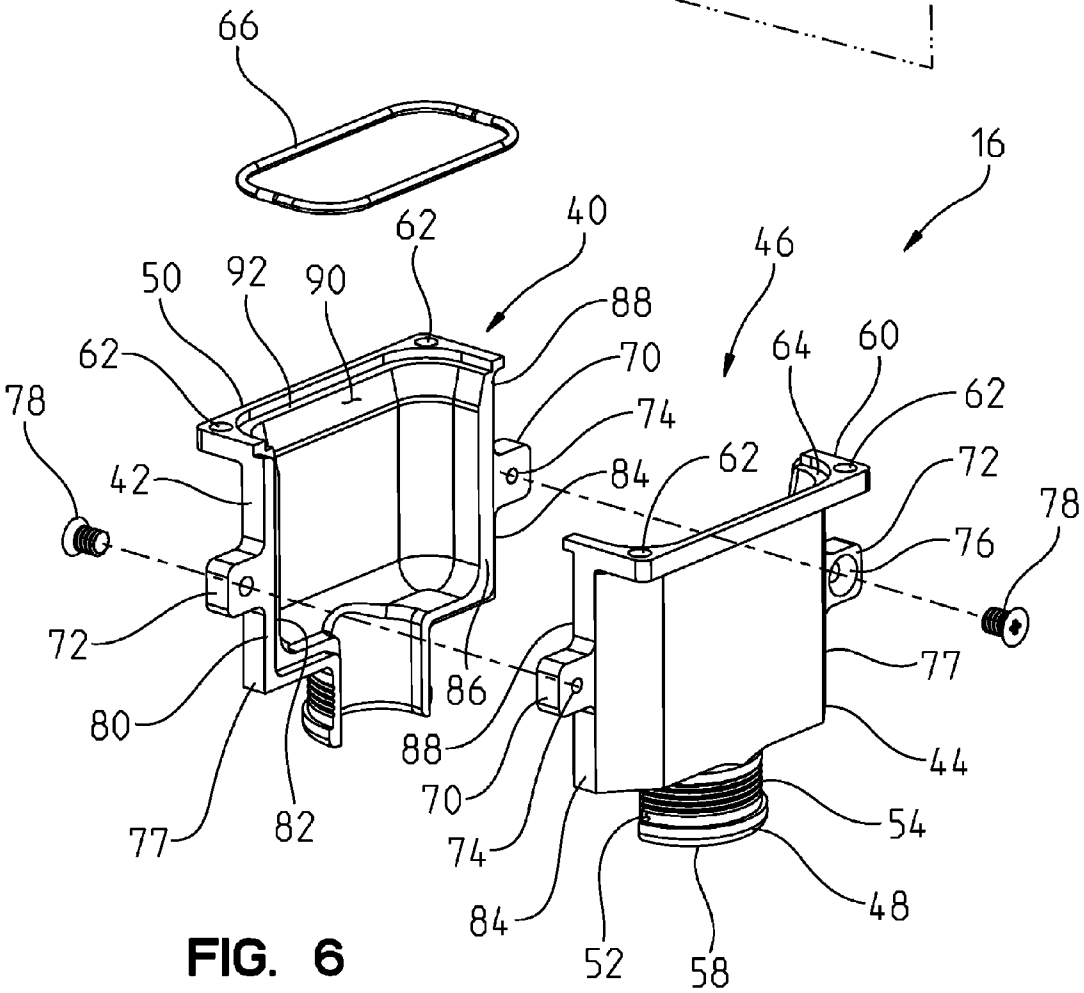
66
16
62
40
46
50
92
90
88
62
70
64
60
78
74
62
42
84
62
72
78
76
72
77
80
86
88
44
70
54
77
82
74
84
48
52
58

FIG. 6

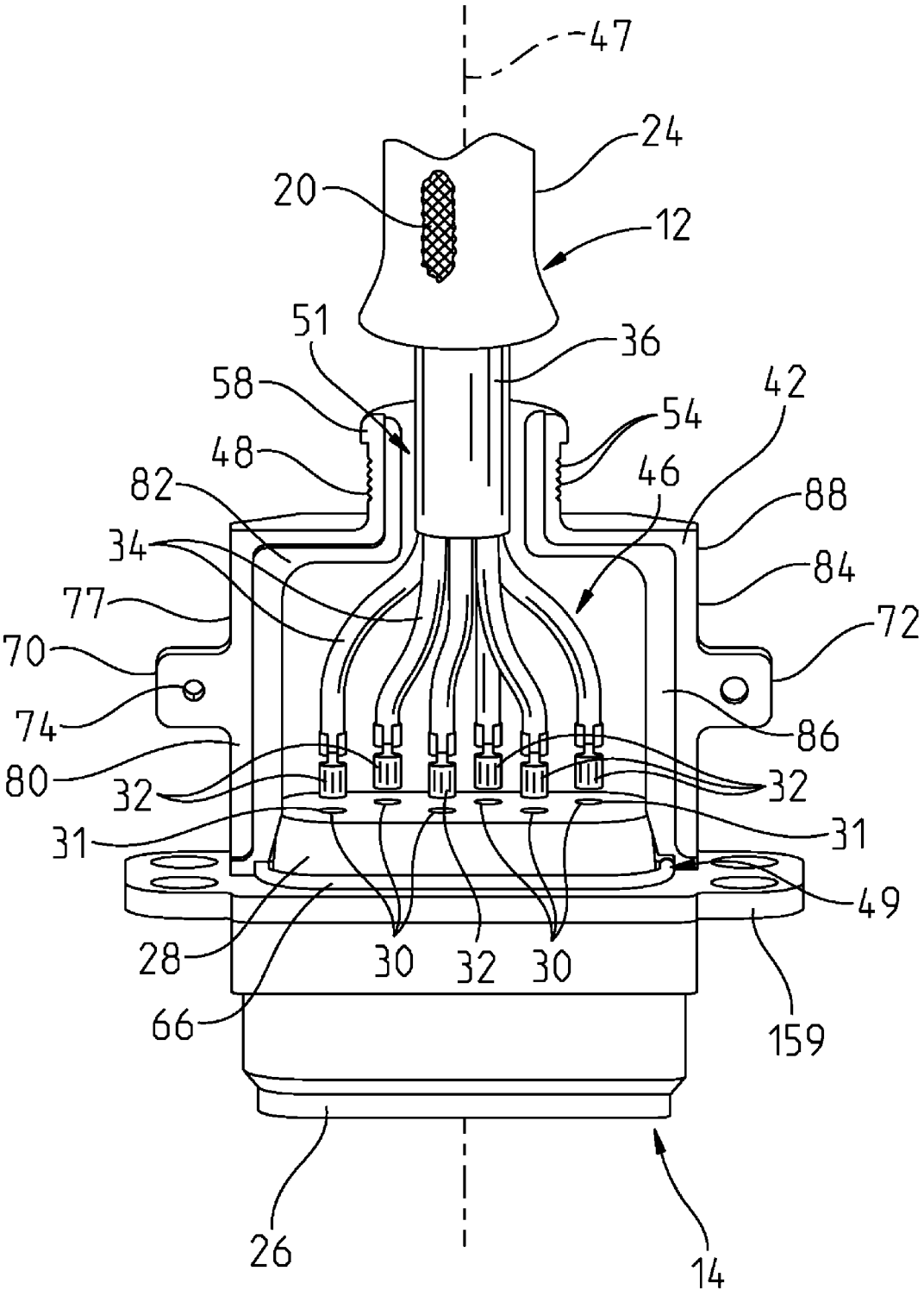
47
24
20
12
51
36
58
42
54
48
46
82
88
34
84
77
72
70
74
86
80
32
32
31
31
49
28
30
32
30
66
159
26
14

FIG. 7

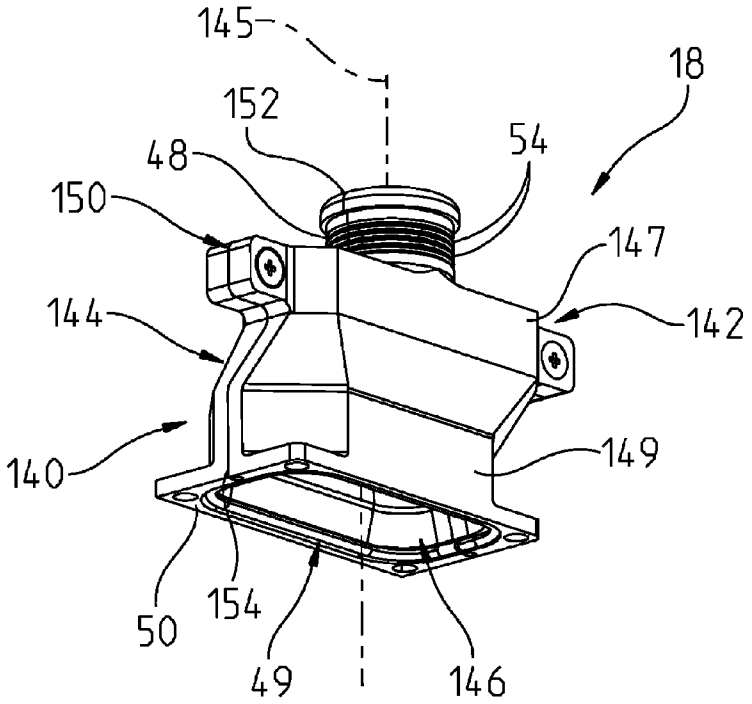
145
18
152
54
48
150
147
144
142
140
149
50
154
49
146

FIG. 8

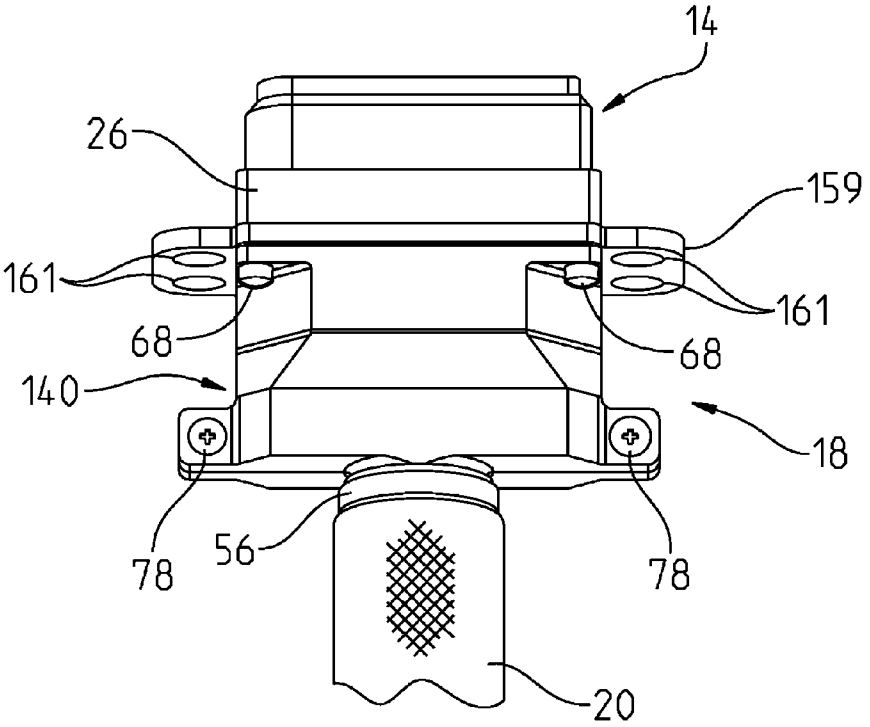
14
26
159
161
161
68
68
140
18
78
56
78
20

FIG. 9

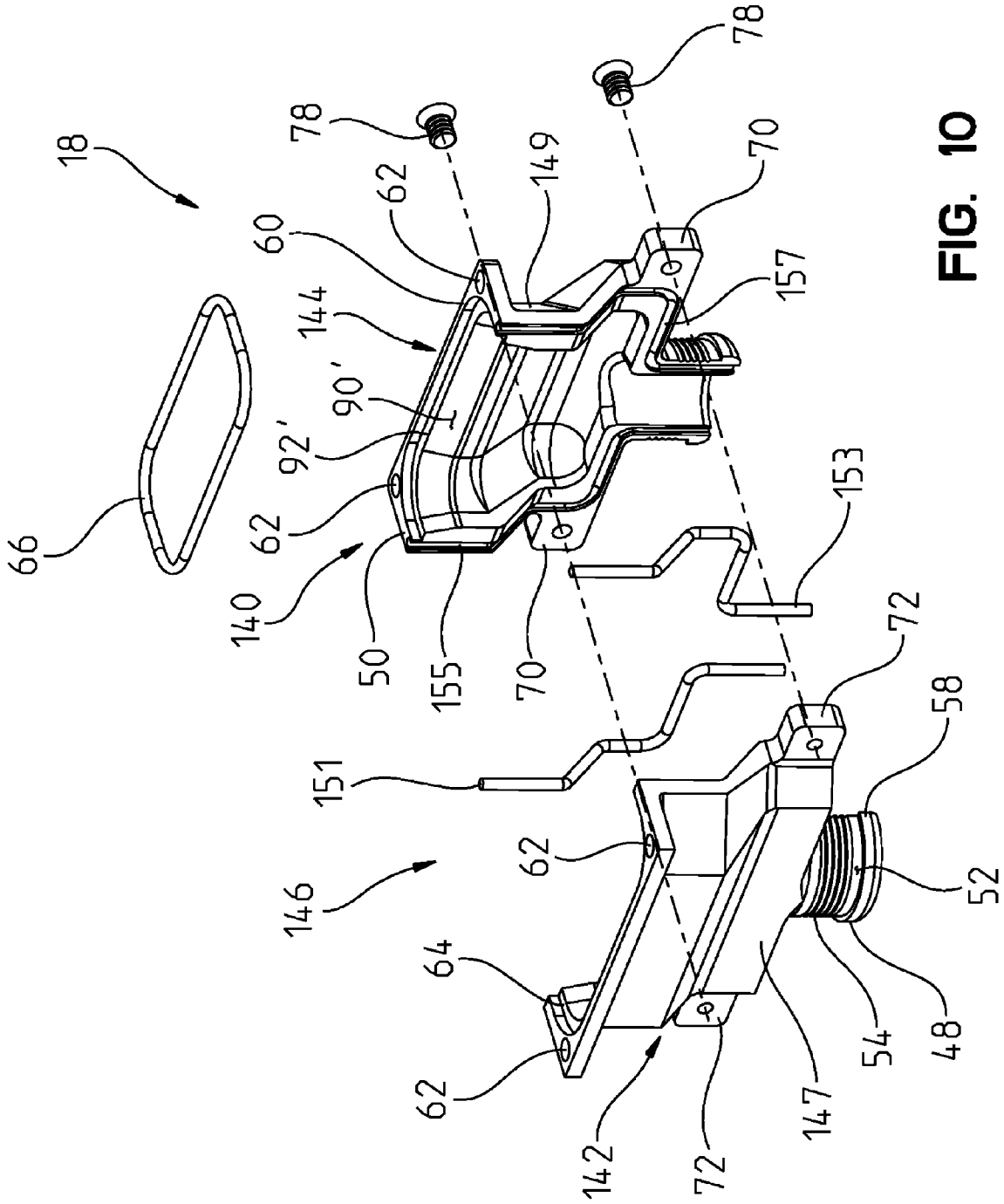
18
78
78
62
149
70
60
144
157
90'
92'
62
66
140
50
155
70
153
72
58
151
62
146
52
64
62
54
48
147
142
72

FIG. 10

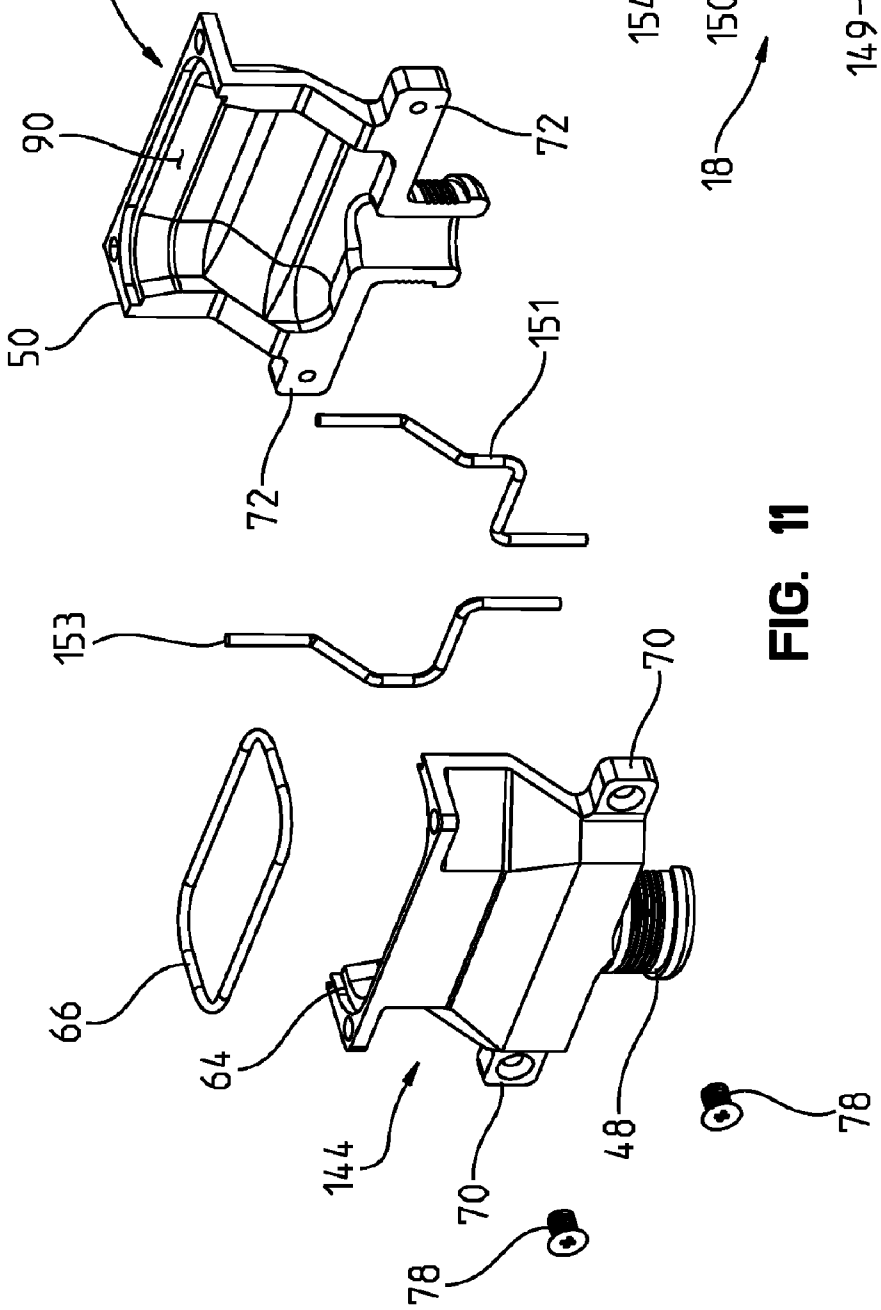
142
90
50
72
72
151
153
66
64
144
70
70
48
78
78

FIG. 11

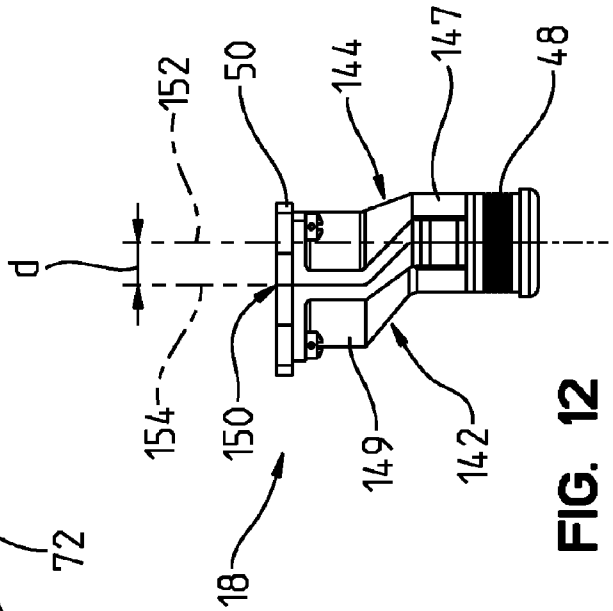
d
152
154
150
18
50
144
149
147
142
48

FIG. 12

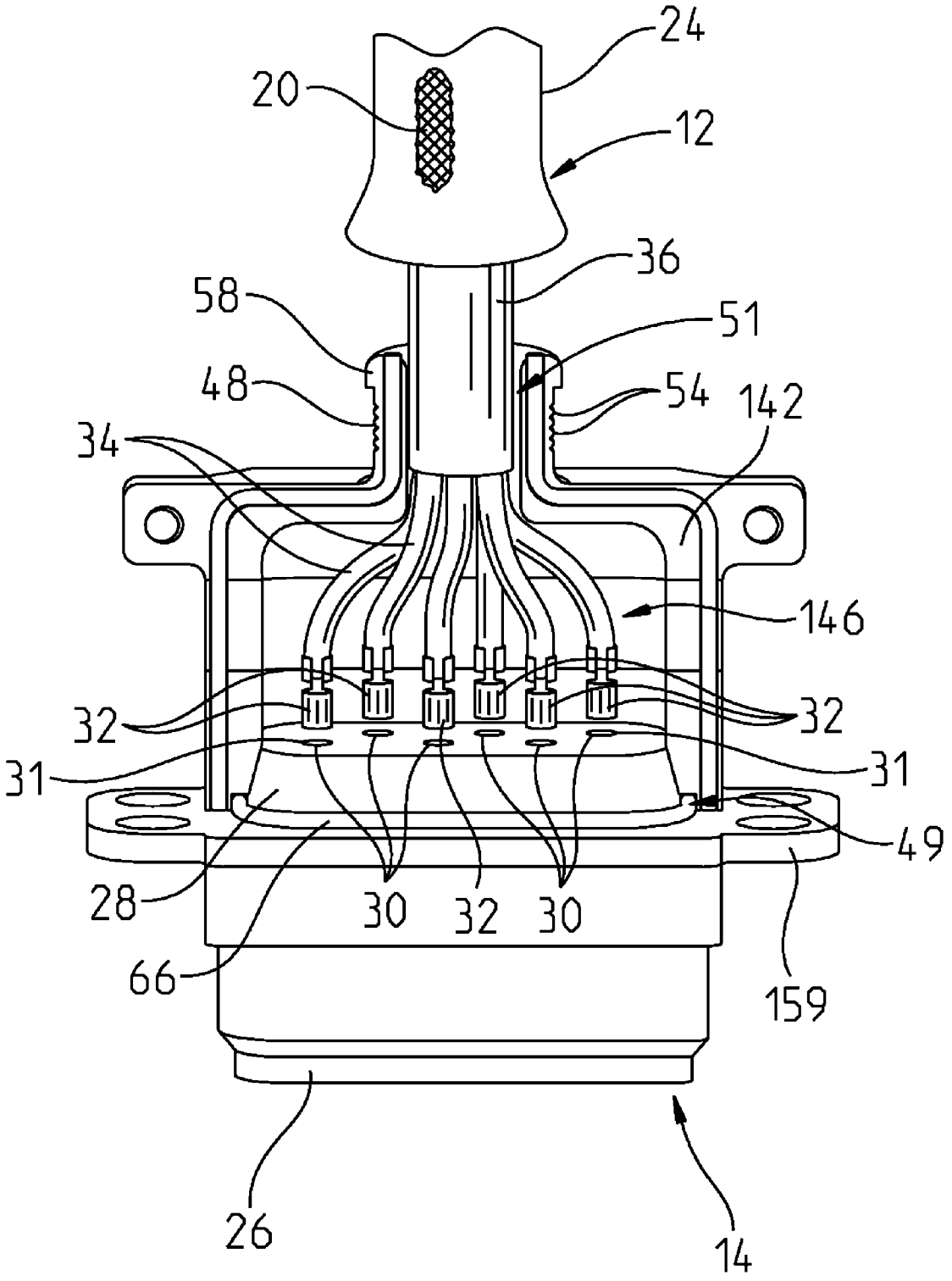
24
20
12
36
58
51
48
54
142
34
146
32
32
31
31
49
28
30
32
30
66
159
26
14

FIG. 13

ELECTROMAGNETIC INTERFERENCE PROTECTIVE BACKSHELLS FOR CABLES

CROSS-REFERENCE TO RELATED APPLICATION

This application claims priority to U.S. Provisional Patent Application Ser. No. 61/145,399, filed Jan. 16, 2009, the disclosure of which is expressly incorporated by reference herein.

STATEMENT REGARDING FEDERALLY SPONSORED RESEARCH OR DEVELOPMENT

The invention described herein includes contributions by one or more employees of the Department of the Navy made in performance of official duties and may be manufactured, used and licensed by or for the United States Government for any governmental purpose without payment of any royalties thereon.

BACKGROUND AND SUMMARY OF THE INVENTION

The present invention relates generally to electrical connectors and, more particularly, to a backshell assembly for reducing electromagnetic interference.

Electromagnetic interference (EMI) may adversely effect the performance of electrical circuits. As such, efforts have been made to reduce the sensitivity of electrical circuits to EMI, and to reduce the levels of radiated EMI interfering with electrical circuits. For example, various shielding measures, including shielded cable couplers or backshells, have been developed to reduce EMI transmissions interfering with electrical circuits.

According to an illustrative embodiment of the present disclosure, a backshell configured to receive the end of an electromagnetic interference shielded cable includes a first housing member formed of an electrically conductive material, and a second housing member formed of an electrically conductive material. The second housing member cooperates with the first housing member to define a housing including a receiving cavity extending between opposing first and second ends. A neck is supported proximate the first end, and a connector interface is supported proximate the second end. A releasable coupler operably couples the first housing member with the second housing member. An electromagnetic interference gasket is supported by the connector interface and is configured to be in electrical communication with a cooperating electrical connector. A plurality of gripping members are supported by the neck and are configured to engage an electrically conductive cover of a cable such that the cover of the cable is in electrical communication with the housing. The neck includes a passageway in communication with the receiving cavity and is configured to receive a portion of the cable. A clamp cooperates with the gripping members of the neck to couple the cable to the housing such that a portion of the cover of the cable is captured between the clamp and the neck.

According to another illustrative embodiment of the present disclosure, a backshell configured to receive an end of an electromagnetic interference shielded cable includes a housing having a first housing member formed of an electrically conductive material, and a second housing member formed of an electrically conductive material. The second housing member cooperates with the first housing member to define a receiving cavity extending longitudinally between opposing first and second ends. A longitudinally extending neck is supported at the first end of the receiving cavity and defines a cable receiving passageway. A connector interface is supported at the second end of the receiving cavity. A releasable coupler operably couples the first housing member with the second housing member. An electromagnetic interference shield is positioned intermediate the first and second housing members to facilitate electrical conductivity therebetween. The first housing member and the second housing member are configured to be separable along at least one longitudinal plane extending through the neck for providing access to the receiving cavity and the passageway of the neck.

According to another illustrative embodiment of the present disclosure, a backshell configured to receive the end of a electromagnetic interference shielded cable includes a first housing member formed of an electrically conductive material, and a second housing member formed of an electrically conductive material. The second housing member cooperates with the first housing member along a housing interface to define a housing including a receiving cavity extending longitudinally between opposing first and second ends. The housing interface extends within a first interface plane at the first end and within a second interface plane at the second end, the first interface plane being spaced apart from the second interface plane. A releasable coupler operably couples the first housing member with the second housing member. An electromagnetic interference shield is supported by the housing interface and is configured to facilitate electrical communication between the first housing member and the second housing member. The electromagnetic interference shield includes portions extending within the first and second interface planes.

According to yet another illustrative embodiment of the present disclosure, a method of servicing an electrical connector includes the steps of providing a backshell housing having a first housing member formed of an electrically conductive material and a second housing member formed of an electrically conductive material and cooperating with the first housing member to define a receiving cavity extending between opposing first and second ends along a longitudinal axis. A neck is supported proximate the first end and extends parallel to the longitudinal axis, and a connector interface is supported proximate the second end and extends parallel to the longitudinal axis. The method further includes the steps of providing a cable including a plurality of wires and an electrically conductive cover around the plurality of wires, a first portion of the cable extending within the receiving cavity and the cover being electrically coupled to the housing. The method also includes the steps of disconnecting the electrically conductive cover from the housing, and releasing a coupler from between the first housing member and the second housing member. The method further includes the steps of separating the second housing member from the first housing member along a housing interface extending through the connector interface and the neck, and accessing the portion of the cable within the receiving cavity of the housing.

BRIEF DESCRIPTION OF THE DRAWINGS

The foregoing aspects and many of the attendant advantages of this invention will become more readily appreciated as the same become better understood by reference to the following detailed description when taken in conjunction with the accompanying drawings.

FIG. **1** is a perspective view of a wiring harness assembly including illustrative backshells according to the present disclosure;

FIG. **2** is a plan view of an illustrative mounting configuration for a backshell of FIG. **1**;

FIG. **3** is a perspective view of an illustrative backshell with a cable and a connector coupled thereto;

FIG. **4** is a perspective view of a further illustrative backshell with a cable and a connector coupled thereto;

FIG. **5** is a perspective view of the backshell of FIG. **3**;

FIG. **6** is an exploded perspective view of the backshell of FIG. **5**;

FIG. **7** is a perspective view of the illustrative backshell of FIG. **3**, with the second housing member removed thereby providing access to the cable and the connector within the receiving cavity;

FIG. **8** is a perspective view of the backshell of FIG. **4**;

FIG. **9** is a perspective view of the backshell of FIG. **8**, showing a cable and a connector coupled thereto;

FIG. **10** is a front exploded perspective view of the backshell of FIG. **8**;

FIG. **11** is a rear exploded perspective view of the backshell of FIG. **8**;

FIG. **12** is a side elevational view of the backshell of FIG. **8**; and

FIG. **13** is a perspective view of the illustrative backshell of FIG. **8**, with the second housing member removed thereby providing access to the cable and the connector within the receiving cavity.

Corresponding reference characters indicate corresponding parts throughout the several views. Although the drawings represent embodiments of various features and components according to the present disclosure, the drawings are not necessarily to scale and certain features may be exaggerated in order to better illustrate and explain the present disclosure. The exemplification set out herein illustrates embodiments of the invention, and such exemplifications are not to be construed as limiting the scope of the invention in any manner.

DETAILED DESCRIPTION OF THE DRAWINGS

For the purposes of promoting an understanding of the principles of the invention, reference will now be made to the embodiments illustrated in the drawings, which are described below. The embodiments disclosed below are not intended to be exhaustive or limit the invention to the precise form disclosed in the following detailed description. Rather, the embodiments are chosen and described so that others skilled in the art may utilize their teachings. It will be understood that no limitation of the scope of the invention is thereby intended. The invention includes any alterations and further modifications in the illustrated devices and described methods and further applications of the principles of the invention which would normally occur to one skilled in the art to which the invention relates.

With reference initially to FIGS. **1-4**, an illustrative wiring harness **10** is shown for providing electrical communication between various components. Such a wiring harness **10** may be used in a variety of applications, including for electrically coupling electronic components within vehicles and/or aircraft. The wiring harness **10** may include a plurality of electromagnetic interference (EMI) shielded cables **12** coupled to electrical connectors **14** through illustrative cable couplers or backshells **16** and **18** of the present disclosure. The cables **12** illustratively include an EMI shielding cover, such as an electrically conductive outer cover, illustratively overbraid **20**. The overbraid **20** is illustratively electrically coupled to the backshells **16** and **18** and to grounding straps **22**. The grounding straps **22** are also illustratively formed of electrically conductive material and are coupled to ground termination points (not shown), such that a grounding path is defined from the backshells **16**, **18**, through the overbraid **20** and grounding straps **22**, to ground. The overbraid **20** and the grounding straps **22** may be formed of any conventional electrically conductive material, such as intermeshed fibers of tin-copper alloy. A protective cover **24**, illustratively formed of an aromatic nylon such as Nomex (available from DuPont), may be placed over the overbraid **20** to protect against abrasion and contaminants.

The illustrative electrical connectors **14** may comprise Bendix Style 10-290928 connectors (with the associated sealing plug 990040-1 removed). With reference to FIGS. **3** and **4**, the connectors **14** illustratively include a shell **26** supporting a resilient receiver or strain relief plug **28**. The shell **26** may be formed of a rigid electrically conductive material, such as aluminum, while the receiver **28** may be formed of a flexible electrically insulating material, such as an elastomer. As shown in FIGS. **3**, **4**, **7** and **13**, the receiver **28** includes a plurality of apertures **30** (illustratively six) having inner ends **31** for receiving cooperating connector pins **32** coupled to wires **34** received within an electrically insulating jacket **36** of cable **12**. The connector **14** may cooperate with mating electrical contacts (not shown). More particularly, mating electrical contacts are configured to be received within outer ends **33** of apertures **30** to electrically communicate with pins **32**, while the receiver **28** is configured to maintain the pins **32** in position.

As shown in FIG. **2**, the backshells **16** and **18** have been dimensioned to provide a predetermined clearance "c" with obstructions, such as mounting members. In one illustrative embodiment, the outer dimensions of the backshell **18** are determined by its location on a mounting member **37** (e.g., a transmitter block) relative to a hardback cutout profile **38**. First illustrative backshell **16** is shown in FIG. **3**, and second illustrative backshell **18** is shown in FIG. **4**. With further reference to FIG. **2**, the second backshell **18** is configured to provide clearance "c" of at least 0.100 inches (0.254 centimeters) with cutout profile **38** when coupled to mounting member **37**. Additional variations of the backshells **16** and **18** may result from different mounting configurations and space requirements.

With reference now to FIGS. **3** and **5-7**, illustrative backshell **16** (also known as a "straight backshell") includes a housing **40** defined by a first half shell or housing member **42** and a second half shell or housing member **44**. The first housing member **42** and the second housing member **44** are illustratively identical to each other in order to facilitate manufacturing and reduce the number of different component parts. The first and second housing members **42** and **44** are illustratively formed of an electrically conductive material, such as aluminum.

The housing **40** defines a receiving cavity **46** extending axially along a longitudinal axis **47** between a neck **48** at a first end and a connector interface **50** at a second end. In the illustrative embodiment, the neck **48** is substantially longitudinally aligned with the connector interface **50**. In other words, both the neck **48** and the connector interface **50** extend substantially parallel to the longitudinal axis **47**. An inner portion of the connector receiver **28** extends beyond an opening **49** of the connector interface **50** and into the receiving cavity **46**. A portion of the jacket **36** of cable **12** containing wires **34** is configured to be received within a cable receiving passageway **51** of the neck **48**, while wires **34** with connector pins **32** extend into the receiving cavity **46**. An outer surface **52** of the neck **48** includes a plurality of gripping members **54**, illustratively annular ridges, to assist in securing EMI overbraid **20** thereto. A band clamp **56** illustratively extends

around the overbraid **20** to secure the cable **12** to the neck **48**. The clamp **56** may be a conventional band clamp, such as Glenair clamping band part no. 600-057-1, and secured in an annular configuration around the neck **48** such that the overbraid **20** is secured between the gripping members **54** and the clamp **56**. An annular flange **58** is provided at an outer end of the neck **48** to prevent the clamp **56** from slipping off of the housing **40**.

The connector interface **50** includes a flange **60** surrounding opening **49** and having a plurality of mounting apertures **62**. A groove **64** is formed within the connector interface **50** and is configured to receive an EMI shield, illustratively an EMI gasket **66**. The EMI gasket **66** is illustratively formed of an electrically conductive material, such as interconnected strands of Monel. Shell **26** of the connector **14** is configured to be coupled to the interface **50** through a plurality of fasteners, such as fillister head screws **68** (FIG. **3**), while the EMI gasket **66** is configured to be in electrical communication with the shell **26** of the connector **14**.

With reference to FIG. **6**, first and second retaining bosses or ears **70** and **72** extend laterally outwardly from the housing **40** and include apertures **71** and **73** configured to receive releasable couplings, such as screws **78**. The first boss **70** illustratively includes a locking member, such as a locking helicoil **74**, while the second boss **72** illustratively includes a countersunk recess **76** configured to receive the head of screw **78**. Each of the screws **78** is configured to cooperate with the locking helicoil **74** of the opposing housing member **42** and **44** for releasably securing the housing members **42** and **44** together.

Referring again to FIG. **5**, the first and second housing member **42** and **44** are separable along a housing interface **75** positioned substantially within a longitudinal plane **79** extending laterally relative to the longitudinal axis **47** through the receiving cavity **46** and the neck **48** for providing unobstructed access to the receiving cavity **46** and the passageway **51** of the neck **48**. Each of the housing members **42** and **44** include a first sidewall **77** having a tongue **80** and a groove **82**, and a second sidewall **84** having a cooperating tongue **86** and a cooperating groove **88**. The first sidewall **77** of each housing member **42**, **44** cooperates with the second sidewall **84** of the cooperating housing member **44**, **42**. Given the symmetry of the housing members **42** and **44**, upon assembly of the housing **40**, the tongue **80** of each housing member **42**, **44** is received within the groove **88** of the other housing member **44**, **42**. Similarly, the tongue **86** of each housing member **42**, **44** is received within the groove **82** of the other housing member **44**, **42**. The abutting walls or tongues **88** and **86** define an electromagnetic interference shield, illustratively barrier wall **89**, to prevent EMI interference with the cable **12** within receiving cavity **46**. Illustratively, the EMI shield **89** is formed by the tongues **80** and **86** having a combined width of at least about 0.090 inches (about 0.229 centimeters).

As detailed above, the connector **14** includes a resilient receiver **28** including apertures **30** configured to receive the connector pins **32** of the cable **12**. As the connector **14** is pushed axially inwardly into the receiving cavity **46** of housing **40**, a draw angle surface **90** at the leading edge **92** of the cavity **46** forces the resilient receiver **28** inwardly (perpendicular to the longitudinal axis), thereby compressing the apertures **30** around the connector pins **32**. As such, the interface between the connector **14** and the receiving cavity **46** provides a strain relief by preventing inadvertent removal of the connector pins **32** from the apertures **30** of the receiver **28**.

With reference now to FIGS. **8-13**, a further illustrative backshell **18** (also known as a "joggled backshell") is shown as including a housing **140** defined by a first housing member **142** and a second housing member **144**. The first and second housing members **142** and **144** are illustratively formed of an electrically conductive material, such as aluminum. Many of the features of the backshell **18** are similar to backshell **16** of FIGS. **5-7**. As such, like reference numbers are used to identify like components.

A receiving cavity **146** extends axially parallel to a longitudinal axis **145** between neck **48** and connector interface **50**. With reference to FIGS. **8** and **12**, the housing **140** includes a first portion **147** supporting neck **48** and a second portion **149** supporting connector interface **50**. With reference to FIG. **12**, the first portion **147** is longitudinally offset from the second portion **149**. In other words, the first and second housing members **142** and **144** are separable along an offset or joggled housing interface **150** including a first interface plane **152** and a second interface plane **154**. The first interface plane **152** is spaced apart from the second interface plane **154** by a distance "d". In one illustrative embodiment, the distance "d" is equal to about 0.300 inches (about 0.762 centimeters). The first interface plane **152** extends through the first portion **147** including neck **48** for providing access to the passageway of the neck **48**, while the second interface plane **154** extends through the second portion **149** for providing access to the receiving cavity **146**. Such a longitudinal offset of housing portions **147** and **149** is advantageous in certain mounting situations involving limited space, such as those illustrated in FIG. **2**.

Given the offset or joggled configuration of the housing **140** and limited space for an EMI barrier wall, the overlapping wall **89** of backshell **16** is replaced with respective electromagnetic interface gaskets **151** and **153** (FIGS. **10** and **11**). More particularly, each housing member **142** and **144** defines a seat, illustratively a groove **155**, **157**, to receive respective EMI gasket **151**, **153** extending from the neck **48** to the connector interface **50**. As shown in FIGS. **10-12**, the EMI gaskets **151** and **153** generally follow the contour of the housing interface **150** and, as such, include portions extending within both interface planes **152** and **154**.

As further detailed herein, the backshells **16** and **18** are configured to fit within environmental constraints when assembled per wiring requirements. The backshells **16** and **18** illustratively mate to conventional electrical connectors **14**, after the respective sealing plug has been removed. The preexisting fasteners **68** used to hold sealing plug are used to attach connector **14** to respective backshell **16**, **18**. Once the backshell **16**, **18** is attached to cable **12**, EMI overbraid **20** is slipped over the neck **48** of the respective backshell **16**, **18** and secured via band clamp **56**.

Each backshell **16**, **18** may be coupled to the cable **12** as either a half shell or a completed assembly. According to one illustrative method of assembly, the first housing member **42**, **142** is separate from the second housing member **44**, **144** as the connector pins **32** of cable **12** are received within inner ends **31** of apertures **32** of receiver **28**. The assembled receiver **28** and cable **12** is then placed within the receiving cavity **46** and the passageway **51** of the neck **48**, respectively. More particularly, the conductive overbraid **20** of the cable **12** is pulled back beyond the flange **58** of the neck **48**, and the cable jacket **36** placed within passageway **51**. The wires **34** are positioned within the receiving cavity **46**, with the connector pins **32** received within inner ends **31** of apertures **30** of receiver **28**. Next, the second housing member **44**, **144** is coupled to the first housing member **42**, **142**, illustratively by using screws **78**. An EMI barrier shield is defined by overlapping wall **89** in backshell **16** and by EMI gaskets **151** and **153** in backshell **18**.

Next, the shell **26** of the connector **14** is coupled to the assembled backshell housing **40**, **140**, illustratively through screws **68**. Next, the conductive overbraid **20** of the cable **12** is pulled over the neck **48**. The band clamp **56** is secured around the overbraid **20**, such that the overbraid **20** is received intermediate the clamp **56** and the gripping members **54**.

The releasable couplers or screws **78** between the housing members **42** and **44**, **142** and **144** facilitate disassembly for servicing and repair. Moreover, the structure of the backshells **16** and **18** allows for quick separation of respective housing members **42**, **44** and **142**, **144** for inspection and repair of internal components within receiving cavity **46**, **146** and neck passageway **51**. A user may pull back the EMI overbraid **20** so that conductor level visual inspection can be performed without de-pinning the connector **14**. Cable assemblers illustratively clamp the housing members **42**, **142** and **44**, **144** to the cable **12** prior to drawing the receiver **28** into the draw angle surface **90** of cavity **46**, **146** of the backshell **16**, **18**. More particularly, the screws **68** are illustratively used to couple receiver **28** to backshell **16**, **18**. The connector flange **159** has a plurality of apertures **161** which may be used to secure the connector **14** to a connector support via a conventional spring loaded mounting assembly and screw combination (not shown).

An illustrative method of servicing the electrical connector **14** includes providing the backshell housing **40**, **140** with cable **12** including jacket **36** extending within the receiving cavity **46**, **146** and overbraid **20** electrically coupled to the housing **40**, **140**. The overbraid **20** is uncoupled from the neck **48** by removing the clamp **56** and sliding the overbraid **20** axially away from the housing **40**, **140**. Next, the screws **68** are released from between at least the second housing member **44**, **144** (and optionally the first housing member **42**, **142**) and the shell **26** of the connector **14**. Second housing member **44**, **144** is then uncoupled from the first housing member **42**, **142** by releasing screws **78**. The second housing member **44**, **144** is then separated from the first housing member **42**, **142** along the housing interface **75**, **150**, to access a portion of the cable **12** within the receiving cavity **46**, **146** of the housing **40**, **140**. Depending on the extent of service required, the connector pins **32** may be removed from the receiver **28**. As detailed above, by providing a draw angle surface **90** on the second end of the receiving cavity **46**, **146**, and inserting connector pins **32** within the openings **30** of the receiver **28**, upon assembly the draw angle surface **90** forces the resilient receiver **28** of the connector **14** inwardly to compress around the connector pins **32** of the cable **12**.

While this invention has been described as having an exemplary design, the present invention may be further modified within the spirit and scope of this disclosure. This application is therefore intended to cover any variations, uses, or adaptations of the invention using its general principles. Further, this application is intended to cover such departures from the present disclosure as come within known or customary practice in the art to which this invention pertains.

The invention claimed is:

1. A backshell configured to receive the end of an electromagnetic interference shielded cable, the backshell comprising:

a first housing member formed of an electrically conductive material;

a second housing member formed of an electrically conductive material, the second housing member cooperating with the first housing member to define a housing including a receiving cavity extending between opposing first and second ends, a neck supported proximate the first end, and a connector interface supported proximate the second end;

a releasable coupler operably coupling the first housing member with the second housing member;

an electromagnetic interference gasket supported by the connector interface and configured to be in electrical communication with a cooperating electrical connector;

a plurality of gripping members supported by the neck and configured to engage an electrically conductive cover of a cable such that the cover of the cable is in electrical communication with the housing, the neck including a passageway in communication with the receiving cavity and configured to receive a portion of the cable; and

a clamp cooperating with the gripping members of the neck to couple the cable to the housing such that a portion of the cover of the cable is captured between the clamp and the neck;

wherein the second housing member is separable from the first housing member along a housing interface, the housing interface extending within a first interface plane at the first end and within a second interface plane at the second end, the first interface plane being spaced apart from the second interface plane.

2. The backshell of claim **1**, wherein each of the first and second housing members include a tongue and a groove, the tongue received within the groove of the other of the second and first housing member to define an electromagnetic interference barrier wall.

3. The backshell of claim **2**, wherein the electromagnetic interference barrier wall extends from the neck to the electromagnetic interference gasket at the connector interface.

4. The backshell of claim **1**, wherein the first and second housing members define a gasket seat, and an electromagnetic interference gasket is supported by the gasket seat from the neck to the connector interface.

5. The backshell of claim **1**, wherein the gripping members include a plurality of annular ridges configured to engage an electromagnetic interference braiding.

6. The backshell of claim **1**, wherein the coupler includes a releasable fastener extending between mounting apertures within the first and second housings.

7. The backshell of claim **1**, wherein the electromagnetic interference gasket supported by the connector interface comprises a closed loop electrically conductive gasket.

8. The backshell of claim **1**, wherein the first housing member and the second housing member are configured to be separable along at least one longitudinal plane extending through the neck for providing access to the receiving cavity and the passageway of the neck.

9. A backshell configured to receive the end of an electromagnetic interference shielded cable, the backshell comprising:

a first housing member formed of an electrically conductive material;

a second housing member formed of an electrically conductive material, the second housing member cooperating with the first housing member to define a housing including a receiving cavity extending between opposing first and second ends, a neck supported proximate the first end, and a connector interface supported proximate the second end;

a releasable coupler operably coupling the first housing member with the second housing member;

an electromagnetic interference gasket supported by the connector interface and configured to be in electrical communication with a cooperating electrical connector;

a plurality of gripping members supported by the neck and configured to engage an electrically conductive cover of a cable such that the cover of the cable is in electrical communication with the housing, the neck including a passageway in communication with the receiving cavity and configured to receive a portion of the cable; and

a clamp cooperating with the gripping members of the neck to couple the cable to the housing such that a portion of the cover of the cable is captured between the clamp and the neck;

further including a draw angle surface at the second end of the receiving cavity, wherein a connector including a resilient receiver is configured to cooperate with the connector interface, the cable includes a plurality of connector pins, and the draw angle surface is configured to force the resilient receiver of the connector inwardly to compress around the connector pins of the cable.

10. A backshell configured to receive the end of an electromagnetic interference shielded cable, the backshell comprising:

a housing including a first housing member formed of an electrically conductive material, and a second housing member formed of an electrically conductive material, the second housing member cooperating with the first housing member to define a receiving cavity extending longitudinally between opposing first and second ends, a longitudinally extending neck supported at the first end of the receiving cavity and defining a cable receiving passageway, and a connector interface supported at the second end of the receiving cavity;

a releasable coupler operably coupling the first housing member with the second housing member;

an electromagnetic interference shield positioned intermediate the first and second housing members to facilitate electrical conductivity therebetween; and

wherein the first housing member and the second housing member are configured to be separable along at least one longitudinal plane extending through the neck for providing access to the receiving cavity and the passageway of the neck;

wherein the second housing member is separable from the first housing member along a housing interface, the housing interface extending within a first interface plane at the first end and within a second interface plane at the second end, the first interface plane being spaced apart from the second interface plane.

11. The backshell of claim **10**, further comprising a plurality of gripping members supported by the neck and configured to engage an electrically conductive cover of a cable received within the passageway of the neck such that the cover of the cable is in electrical communication with the housing, and a clamp cooperating with the gripping members of the neck to couple the cable to the housing.

12. The backshell of claim **10**, further comprising an electromagnetic interference gasket supported by the connector interface and configured to be in electrical communication with a cooperating electrical connector.

13. The backshell of claim **10**, wherein the electromagnetic interference shield includes a tongue and a groove supported by each of the first and second housing members, the tongue of each of the first and second housing members received within the groove of the other of the second and first housing member to define an electromagnetic interference barrier wall.

14. The backshell of claim **13**, wherein the electromagnetic interference barrier wall extends from the neck to the connector interface.

15. The backshell of claim **10**, wherein the first and second housing members define a gasket seat, and the electromagnetic interference shield comprises an electromagnetic interference gasket supported by the gasket seat from the neck to the connector interface.

16. The backshell of claim **10**, wherein the coupler includes a releasable fastener extending between mounting apertures within the first and second housings.

17. A backshell configured to receive the end of an electromagnetic interference shielded cable, the backshell comprising:

a housing including a first housing member formed of an electrically conductive material, and a second housing member formed of an electrically conductive material, the second housing member cooperating with the first housing member to define a receiving cavity extending longitudinally between opposing first and second ends, a longitudinally extending neck supported at the first end of the receiving cavity and defining a cable receiving passageway, and a connector interface supported at the second end of the receiving cavity;

a releasable coupler operably coupling the first housing member with the second housing member;

an electromagnetic interference shield positioned intermediate the first and second housing members to facilitate electrical conductivity therebetween;

wherein the first housing member and the second housing member are configured to be separable along at least one longitudinal plane extending through the neck for providing access to the receiving cavity and the passageway of the neck; and

further including a draw angle surface at the second end of the receiving cavity, wherein a connector including a resilient receiver is configured to cooperate with the connector interface, the cable includes a plurality of connector pins, and the draw angle surface is configured to force the resilient receiver of the connector inwardly to compress around the connector pins of the cable.

18. A backshell configured to receive the end of a electromagnetic interference shielded cable, the backshell comprising:

a first housing member formed of an electrically conductive material;

a second housing member formed of an electrically conductive material, the second housing member cooperating with the first housing member along a housing interface to define a housing including a receiving cavity extending longitudinally between opposing first and second ends, the housing interface extending within a first interface plane at the first end and within a second interface plane at the second end, the first interface plane being spaced apart from the second interface plane;

a releasable coupler operably coupling the first housing member with the second housing member;

an electromagnetic interference shield supported by the housing interface and configured to facilitate electrical communication between the first housing member and the second housing member, the electromagnetic interference shield including portions extending within the first and second interface planes; and

further including a draw angle surface at the second end of the receiving cavity, wherein a connector including a resilient receiver is configured to cooperate with the housing, the cable includes a plurality of connector pins, and the draw angle surface is configured to force the resilient receiver of the connector inwardly to compress around the connector pins of the cable.

19. The backshell of claim **18**, further comprising a neck supported at the first end of the housing and including a passageway in communication with the receiving cavity and configured to receive a portion of a cable, and a connector interface supported proximate the second end of the housing, wherein the first interface plane extends through the neck for providing access to the passageway of the neck.

20. The backshell of claim **19**, further comprising a plurality of gripping members supported by the neck and configured to engage an electrically conductive cover of the cable such that the cover of the cable is in electrical communication with the housing.

21. The backshell of claim **19**, further comprising an electromagnetic interference gasket supported by the connector interface and configured to be in electrical communication with a cooperating electrical connector.

22. The backshell of claim **19**, wherein the electromagnetic interference shield includes a tongue and a groove supported by each of the first and second housing members, the tongue of each of the first and second housing members received within the groove of the other of the second and first housing member to define an electromagnetic interference barrier wall.

23. The backshell of claim **22**, wherein the electromagnetic interference barrier wall extends from the neck to the connector interface.

24. The backshell of claim **19**, wherein the first and second housing members define a gasket seat, and the electromagnetic interference shield comprises an electromagnetic interference gasket supported by the gasket seat from the neck to the connector interface.

25. The backshell of claim **18**, wherein the coupler includes a releasable fastener extending between mounting apertures within the first and second housings.

* * * * *